# FRESNO GENERAL PLAN
# RESPONSE TO COMMENTS DOCUMENT

**FRESNO, CALIFORNIA**

**STATE CLEARINGHOUSE NO. 2019050005**

LSA

July 2020

**This page intentionally left blank**

# FRESNO GENERAL PLAN
# RESPONSE TO COMMENTS DOCUMENT

**FRESNO, CALIFORNIA**

**STATE CLEARINGHOUSE NO. 2019050005**

Submitted to:

City of Fresno
Planning and Development Department
2600 Fresno Street
Fresno, California 93721

Prepared by:

LSA
2491 Alluvial Avenue, PM 626
Clovis, California 93611
559.490.1210

Project No. CFO1802

LSA

July 2020

**This page intentionally left blank**

# TABLE OF CONTENTS

**1.0 INTRODUCTION ..... 1-1**

1.1 Purpose of the Response to Comments Document ..... 1-1
1.2 Environmental Review Process ..... 1-1
1.3 Document Organization ..... 1-1

**2.0 DRAFT PEIR COMMENTERS ..... 2-1**

2.1 Organization of Comment Letters and Responses ..... 2-1
2.2 List of Commenters on the Draft PEIR ..... 2-1

**3.0 COMMENTS AND RESPONSES ..... 3-1**

3.1 Master Response: Project Description and Baseline Conditions ..... 3-1
3.2 Comments and Responses Matrix ..... 3-4

**4.0 DRAFT PEIR TEXT REVISIONS ..... 4-1**

Chapter 3, Project Description ..... 4-1
Section 4.4, Biological Resources ..... 4-2
Section 4.10, Hydrology and Water Quality ..... 4-5
Section 4.16, Transportation ..... 4-8
Section 4.17, Utilities and Service Systems ..... 4-10

## APPENDICES

K: PUBLIC COMMENT LETTERS ON THE DRAFT PEIR

## TABLES

Table 2.A: List of Comments Received ..... 2-1
Table 3.A: Comments and Responses Matrix ..... 3-5

**This page intentionally left blank**

# 1.0 INTRODUCTION

## 1.1 PURPOSE OF THE RESPONSE TO COMMENTS DOCUMENT

This document has been prepared to respond to comments received on the Draft Program Environmental Impact Report (Draft PEIR) prepared for the approved General Plan (proposed project) for the City of Fresno (City). The Draft PEIR identifies the likely environmental consequences associated with implementation of the proposed project, and recommends mitigation measures to reduce potentially significant impacts. This Response to Comments (RTC) Document provides responses to comments on the Draft PEIR and makes revisions to the Draft PEIR, as necessary, in response to those comments or to make clarifications in the Draft PEIR. This document, together with the Draft PEIR, constitutes the Final EIR for the proposed project.

## 1.2 ENVIRONMENTAL REVIEW PROCESS

According to the California Environmental Quality Act (CEQA), lead agencies are required to consult with public agencies having jurisdiction over a proposed project and to provide the general public with an opportunity to comment on the Draft PEIR.

The City circulated a Notice of Preparation (NOP) to solicit input from responsible and trustee agencies regarding the scope and content of the Draft PEIR, as well as identify potential areas of controversy. The NOP was published on May 16, 2019, and was distributed to local, regional, and State agencies. A scoping session for the preparation of the EIR was held at 5:00 p.m. on May 21, 2019. Comments received by the City on the NOP were taken into account during the preparation of the Draft PEIR.

The Draft PEIR was made available for public review on March 6, 2020, and was distributed to local and State responsible and trustee agencies. The Draft PEIR and an announcement of its availability were posted electronically on the City's website, and hard copies were available for public review at Fresno City Hall and all branches of the Fresno County Public Library located in Fresno. Additionally, a notice of the Draft PEIR's availability was posted in the Fresno Bee.

The 45-day public comment period was scheduled to end on April 20, 2020. However, due to closures of public facilities in response to COVID-19, the City extended the public comment period by 15 days to May 5, 2020, to allow public agencies and interested parties a total of 61 days to review and submit comments on the Draft PEIR. During the 61-day public review period for the Draft PEIR, the City received nine comment letters. Copies of all written comments received during the comment period are included in Appendix K, Public Comment Letters on the Draft PEIR, of this document.

## 1.3 DOCUMENT ORGANIZATION

This RTC Document consists of the following chapters:

- **Chapter 1.0: Introduction**. This chapter discusses the purpose and organization of this RTC Document, and summarizes the environmental review process for the project.

- **Chapter 2.0: Draft PEIR Commenters**. This chapter contains a list of agencies, individuals and organizations who submitted written comments on the Draft PEIR during the public review period.

- **Chapter 3.0: Comments and Responses**. This chapter contains a matrix that includes text of each CEQA-related comment received on the Draft PEIR during the public review period, and a written response to each comment. Reproductions of all comment letter included in Appendix K, Public Comment Letters on the Draft PEIR.

- **Chapter 4.0: Draft PEIR Text Revisions**. Corrections to the Draft PEIR that are necessary in light of the comments received and responses provided, or necessary to amplify or clarify material in the Draft PEIR, are contained in this chapter. No significant changes have been made to the information contained in the Draft PEIR as a result of the responses to comments, and no significant new information has been added that would require recirculation of the document. Double underlined text represents language that has been added to the Draft PEIR; text with strikeout has been deleted from the Draft PEIR.

# 2.0 DRAFT PEIR COMMENTERS

This chapter presents a list of comment letters received during the public review period and describes the organization of the letters and comments that are provided in Chapter 3.0, Comments and Responses, of this document.

## 2.1 ORGANIZATION OF COMMENT LETTERS AND RESPONSES

Chapter 3.0 includes a matrix of each CEQA-related comment received on the Draft PEIR during the public review period, and a written response to each comment. Reproductions of all comment letter included in Appendix K, Public Comment Letters on the Draft PEIR. The written comments are grouped by the affiliation of the commenter, as follows: State agencies (A), Local Agencies (B), and Organizations and Interested Parties (C). The comment letters are numbered consecutively following the designations defined below:

| | |
|---|---|
| State Agencies | A |
| Local Agencies | B |
| Organizations and Interested Parties | C |

Comment letters are numbered and comments within each letter are numbered consecutively after the hyphen.

## 2.2 LIST OF COMMENTERS ON THE DRAFT PEIR

Table 2.A provides a list of the State agencies, local agencies, and organizations and interested parties that commented on the Draft PEIR prior to the close of the public comment period or immediately thereafter. The comments received have been organized by date received and in a manner that facilitates finding a particular comment or set of comments. Each comment letter received is indexed with a number below.

### Table 2.A: List of Comments Received

| | | |
|---|---|---|
| **State Agencies** | | |
| A1 | California Department of Fish and Wildlife | April 20, 2020 |
| A2 | California Department of Transportation, District 6 | May 5, 2020 |
| **Local Agencies** | | |
| B1 | Fresno Council of Governments | April 24, 2020 |
| B2 | Fresno Metropolitan Flood Control District | May 5, 2020 |
| B3 | San Joaquin Valley Air Pollution Control District | May 5, 2020 |
| B4 | Fresno Irrigation District | May 6, 2020 |
| **Organizations and Interested Parties** | | |
| C1 | ODELL Planning & Research, Inc. | March 23, 2020 |
| C2 | Central Valley Air Quality Coalition | May 4, 2020 |
| C3 | Leadership Counsel for Justice and Accountability | May 5, 2020 |

**This page intentionally left blank**

# 3.0 COMMENTS AND RESPONSES

Written responses to the comment letters received on the Draft Program Environmental Impact Report (PEIR) are provided in this chapter. The letters received during the public review period on the Draft PEIR are provided in their entirety. The letters are immediately followed by responses keyed to the specific comments.

Please note that text within the letters that has not been numbered does not raise environmental issues or relate to the adequacy of the information or analysis within the Draft PEIR and, therefore, no comment is enumerated or response required, per CEQA Guidelines Section 15132. In addition, when general support or opposition is given for the project, that comment is noted but no further analysis is provided in the response as the commenter is not questioning the adequacy of the information or analysis within the Draft PEIR.

Where comments on the Draft PEIR concern issues requiring technical expertise such as those related to air quality, the responses to comments, like the initial analysis in the Draft PEIR, relies on the knowledge and professional analysis of qualified experts. This chapter also includes a Master Response intend to address comments related to a particular theme. In this case, a Master Response is included to further clarify the Project Description and the baseline conditions that were evaluated against in the Draft PEIR.

Where revisions to the Draft PEIR text are called for, the page is set forth, followed by the appropriate revision. Added text is indicated with double-underlined text, and deleted text is shown in ~~strikeout~~ text. Text revisions to the Draft PEIR are summarized in Chapter 4.0 of this Response to Comments Document. Information provided in this Response to Comments document clarifies, amplifies, or makes minor modifications to the Draft PEIR. No significant changes have been made to the information contained in the Draft PEIR as a result of the comments received, and no significant new information has been added that would require recirculation of the document pursuant to State CEQA Guidelines, section 15088.5.

## 3.1 MASTER RESPONSE: PROJECT DESCRIPTION AND BASELINE CONDITIONS

Chapter 3, Project Description, of the Draft PEIR provides an overview of the what the City is considering as the proposed project and describes the specific changes to the approved General Plan that are evaluated in the Draft PEIR. The overall intent of the proposed project is to update the text of policies of the approved General Plan in order to reflect changes in applicable statutes and regulations related to Vehicle Miles Traveled (VMT), update the Greenhouse Gas Reduction Plan, update the EIR to include a current baseline for the continued implementation of the General Plan, and reflect changes in City planning documents since adoption of the General Plan in 2014.

When the General Plan was adopted in 2014, the City utilized a Master Environmental Impact Report (MEIR) to evaluate implementation of the General Plan. A MEIR is intended to streamline subsequent environmental reviews of projects by allowing for approvals of projects analyzed in the MEIR. In many cases, the MEIR was used to approve projects in a streamlined process because the analysis included in the MEIR addressed potential impacts that could occur at the project-level by

including project-level mitigation measures. The City has used the MEIR as a basis to determine whether a proposed project could rely on a Finding of Conformity and, therefore, not require any additional environmental analysis.

As discussed above, through the amendment of the approved General Plan to update policies related to transportation and the update of the Greenhouse Gas Reduction Plan, the City is also updating the EIR for the approved General Plan from an MEIR to a Program EIR. Although similar to a MEIR, a Program EIR analyzes the potential environmental impacts that could result from implementation of a plan, but a Program EIR does not provide analysis of specific projects that can be used to complete a Finding of Conformity. The use of a Program EIR allows for future plans and projects to rely on analysis included in the Program EIR to tier from for subsequent analysis. This would allow for future plans and projects to utilize the baseline information included in the Program EIR; however, because a Program EIR does not provide detailed analysis to address project-level impacts, in many cases subsequent analysis of future plans and project will require specific project-related analysis and mitigation.

The proposed text updates to the approved General Plan related to VMT, the updated Greenhouse Gas Reduction Plan, and descriptions of plans adopted since certification of the MEIR are all parts of one large project to update the approved General Plan's environmental documentation. Therefore, preparation of a Program EIR for the proposed project is appropriate, as described in *State CEQA Guidelines* Section 15168 of a project's relation either:

1. Geographically;

2. A logical parts in the chain of contemplated actions;

3. In connection with issuance of rules, regulations, plans, or other general criteria to govern the conduct of a continuing program; or

4. As individual activities carried out under the same authorizing statutory or regulatory authority and having generally similar environmental effects which can be mitigated in similar ways.

Unlike a Project EIR, which addresses the environmental impacts of a specific development project, a Program EIR addresses the potential impacts of a series of actions that can be characterized as one large project. Therefore, the use of a Program EIR is appropriate in evaluating project-related environmental impacts resulting from implementation of the proposed project.

Because there is no specific development project being proposed at this time, a Project EIR cannot be prepared; no specific project-level details are available. Future discretionary projects facilitated by certification of a Program EIR must be further evaluated in light of the Program EIR to determine whether or not an additional environmental document must be prepared. Therefore, the City will determine whether future projects require no new analysis or the preparation of a new Initial Study, Mitigated Negative Declaration, or new EIR. Under CEQA, environmental documentation is required on all discretionary actions. The Draft PEIR includes mitigation measures that establish performance standards to ensure that when future specific projects are proposed as facilitated under the approved General Plan, and at the time when information regarding future projects is known,

project specific analysis will be conducted and mitigation measures will be developed to minimize the potential environmental impacts.

Section 15126.4 of the CEQA Guidelines provides a description of how feasible mitigation measures are to be implemented to minimize significant adverse impacts. Section 15126.4(a)(1)(B) states the following:

> *Formulation of mitigation measures shall not be deferred until some future time. The specific details of a mitigation measure, however, may be developed after project approval when it is impractical or infeasible to include those details during the project's environmental review provided that the agency (1) commits itself to the mitigation, (2) adopts specific performance standards the mitigation will achieve, and (3) identifies the type(s) of potential action(s) that can feasibly achieve that performance standard and that will considered, analyzed, and potentially incorporated in the mitigation measure.*

As indicated in the language of Section 15126.4(a)(1)(B), mitigation may be developed after project approval when it is infeasible to include such details during a project's environmental review. The use of a Program EIR allows for such a condition; the details of future discretionary projects allowed under a General Plan would be subject to CEQA review at the time they are proposed, and appropriate mitigation would be developed based on such analysis. Future project details are unknown at this time and therefore it is infeasible to include project-level mitigation.

Implementation of mitigation measures included in the Draft PEIR would directly affect future discretionary projects as those projects would be subject to additional environmental analysis consistent with CEQA. Ministerial projects, projects that are exempt from the requirements of CEQA, are still required to conform to fixed standards or objective measurements. For example, ministerial projects include such actions as the issuance of building permits, approval of final subdivision maps, and approval of individual utility service connections so long as the proposed actions conform to fixed standards and do not require subjective discretion for approval.

The City has developed VMT Thresholds to be used for environmental analyses, and those thresholds become effective July 1, 2020. As discussed in the Project Description, the discretionary action related to the proposed project is the adoption of text changes to the Mobility and Transportation Element of the approved General Plan, and updating the Greenhouse Gas Reduction Plan. The General Plan, as a whole, is not being considered to be re-adopted.

The City is not modifying the City's current land use plan, and the proposed project does not result in any direct physical changes or new land uses. By updating the General Plan policies, and issuing the Notice of Preparation (NOP) for the PEIR in May 2019, the regulatory conditions and physical conditions within the Planning Area at the time the NOP was issued are the baseline. The Draft PEIR provides updated baseline conditions information to account for changes to the approved General Plan and regulatory environment that have taken place since the approved General Plan was adopted in 2014. Any previous changes to the land use plan, including General Plan amendments, adoption of Specific Plans, and approval of various projects throughout Fresno, have already been evaluated under CEQA, as applicable, and those changes, by definition do not result in any new potential environmental impacts to be considered or evaluated as part of the proposed project.

## 3.2 COMMENTS AND RESPONSES MATRIX

Table 3.A includes all CEQA-related comments received on the Draft PEIR and a response to each comment. The text of each comment has been included in the matrix and includes any grammatical errors included in the original comment letter. Each comment letter is included in its entirety in Appendix K, Public Comment Letters on the Draft PEIR.

## Table 3.A: Comments and Responses Matrix

| Letter/ Comment Number | Comment | Response |
|---|---|---|
| **State Agencies** | | |
| **A1** | **California Department of Fish and Wildlife (April 20, 2020)** | |
| A1-1 | The California Department of Fish and Wildlife (CDFW) received a PEIR from the City of Fresno for the above-referenced Project pursuant to the California Environmental Quality Act (CEQA) and CEQA Guidelines.<br>Thank you for the opportunity to provide comments and recommendations regarding those activities involved in the Project that may affect California fish and wildlife. Likewise, CDFW appreciates the opportunity to provide comments regarding those aspects of the Project that CDFW, by law, may be required to carry out or approve through the exercise of its own regulatory authority under Fish and Game Code.<br>CDFW ROLE<br>CDFW is California's Trustee Agency for fish and wildlife resources and holds those resources in trust by statue for all the people of the State (Fish & G. Code, §§ 711.7, subd. (a) & 1802; Pub. Resources Code, § 21070; CEQA Guidelines § 15386, subd. (a)). CDFW, in its trustee capacity, has jurisdiction over the conservation, protection, and management of fish, wildlife, native plants, and habitat necessary for biologically sustainable populations of those species (Id., § 1802). Similarly, for purposes of CEQA, CDFW is charged by law to provide, as available, biological expertise during public agency environmental review efforts, focusing specifically on projects and related activities that have the potential to adversely affect fish and wildlife resources.<br>CDFW is also submitting comments as a Responsible Agency under CEQA (Pub. Resources Code, § 21069; CEQA Guidelines, § 15381). CDFW expects that it may need to exercise regulatory authority as provided by the Fish and Game Code. As proposed, for example, the Project may be subject to CDFW's lake and streambed alteration regulatory authority (Fish & G. Code, § 1600 et seq.). Likewise, to the extent implementation of the Project as proposed may result in "take" as defined by State law of any species protected under the California Endangered Species Act (CESA) (Fish & G. Code, § 2050 et seq.), related authorization as provided by the Fish and Game Code may be required. | This comment provides an introduction to the comment letter and does not address the adequacy or completeness of the Draft PEIR; does not raise environmental issues; and does not request the incorporation of additional information relevant to environmental issues. Such comments do not require a response, pursuant to Section 15088(a) of the State CEQA Guidelines. No further response is necessary. |
| A1-2 | PROJECT DESCRIPTION SUMMARY<br>Proponent: City of Fresno<br>Objective: The City of Fresno is updating the existing General Plan Master EIR (MEIR) and converting it to a Program EIR (PEIR) to be in conformance with State law and consistent with recent legislative changes related to Vehicle Miles Traveled (VMT). The PEIR | This comment provides a summary of the commenter's understanding of the proposed project, and does not address the adequacy or completeness of the Draft PEIR; does not raise environmental issues; and does not request the incorporation of additional information relevant to environmental issues. Such |

## Table 3.A: Comments and Responses Matrix

| Letter/ Comment Number | Comment | Response |
|---|---|---|
| | includes a current baseline for the continued implementation of the approved General Plan and reflects changes in City planning documents that have occurred since adoption of the approved General Plan in 2014. The City is not proposing any land use changes as a part of this project, but it does include an update to the City's Greenhouse Gas Reduction Plan. This update, consistent with Section 15168 of the CEQA Guidelines, is intended to streamline implementation of the General Plan's programs and projects by supporting them with updated environmental analysis, regulatory framework, and mitigation measures, pursuant to CEQA.<br>Location: The Project site is the entire city of Fresno and its sphere of influence. | comments do not require a response, pursuant to Section 15088(a) of the State CEQA Guidelines. No further response is necessary. |
| A1-3 | COMMENTS AND RECOMMENDATIONS<br>CDFW offers the following comments and recommendations to assist the City of Fresno in adequately identifying and/or mitigating the Project's significant, or potentially significant, direct and indirect impacts on fish and wildlife (biological) resources. Editorial comments or other suggestions may also be included to improve the CEQA document prepared for this Project.<br>There are several special-status species that have been documented in the Project vicinity and may be present at individual Project sites in the Project area. These resources may need to be evaluated and addressed prior to any approvals that would allow ground-disturbing activities or land use changes. The PEIR indicates there are potentially significant impacts unless mitigation measures are taken but some measures are either non-specific and potentially difficult to enforce or missing for some species.<br>CDFW is concerned regarding potential impacts to special-status species including, but not limited to, the State and federally threatened California tiger salamander (*Ambystoma californiense*); the State threatened Swainson's hawk (*Buteo swainsoni*); the State threatened and federally endangered San Joaquin kit fox (*Vulpes macrotis mutica*); the State and federally endangered least Bell's vireo (*Vireo bellii pusillus*); the State threatened tricolored blackbird (*Agelauis tricolor*); the State candidate for listing as endangered Crotch bumble bee (*Bombus crotchii*); the State species of special concern burrowing owl (*Athene cunicularia*), western spadefoot (*Spea hammondii*), western pond turtle (*Emys marmorata*), American badger (*Taxidea taxus*), Chinook salmon (*Oncorhynchus tshawytscha*),pallid bat (*Antrozous pallidus*), and spotted bat (*Euderma maculatum*); and the State rare California Satintail (*Imperata brevifolia*) and other special-status plants. In order to adequately assess any potential impact to biological | This comment provides an introduction to subsequent comments related to specific species with the potential to occur within the Planning Area. This comment lists several species and recommends further project-level evaluation of specific sites to address potential impacts. This comment does not provide specific recommendations. Additional information and recommendations are included in following comments and responses provided as necessary. No further response is required. |

## Table 3.A: Comments and Responses Matrix

| Letter/ Comment Number | Comment | Response |
|---|---|---|
| | resources, focused biological surveys should be conducted by a qualified wildlife biologist/botanist during the appropriate survey period(s) in order to determine whether any special-status species may be present within the Project area. Properly conducted biological surveys, and the information assembled from them, are essential to identify any mitigation, minimization, and avoidance measures and/or the need for additional or protocol-level surveys, especially in the areas not in irrigated agriculture, and to identify any Project-related impacts under CESA and other species of concern. | |
| A1-4 | I. Environmental Setting and Related Impact<br>Would the Project have a substantial adverse effect, either directly or through habitat modifications, on any species identified as a candidate, sensitive, or special-status species in local or regional plans, policies, or regulations, or by CDFW or the United States Fish and Wildlife Service (USFWS)? | This comment is a topic introduction for several comments below. No response is required. |
| A1-5 | COMMENT 1: California Tiger Salamander (CTS)<br>Issue: CTS have the potential to occur in the Project area. Aerial imagery shows that the Project area includes potential upland habitat features (e.g., grasslands or ruderal fields with small mammal burrows) and may include or be adjacent to breeding habitat features (e.g., vernal pools, seasonal ponds, stock ponds, stormwater basins) for CTS that are dispersing from and into the area. The highest potential for these habitat features is in Northeast Fresno near or adjacent to the San Joaquin River and/or near Willow Avenue, but CTS have been documented in railroad right-of-ways, agriculture fields, and other marginal habitat when dispersing from burrows after winter rains begin.<br>Specific Impacts: The potential for ground- and vegetation-disturbing activities associated with the approval of the PEIR could result in: collapse of small mammal burrows, inadvertent entrapment, loss of upland refugia, water quality impacts to breeding sites, reduced reproductive success, reduction in health and vigor of eggs and/or young, increased habitat fragmentation and edge effects, and direct mortality of individuals.<br>Evidence impact would be significant: Up to 75% of historic CTS habitat has been lost to urban and agricultural development (Searcy et al. 2013). Loss, degradation, and fragmentation of habitat are the primary threats to CTS in both the Central and San Joaquin valleys. Contaminants and vehicle strikes are also sources of mortality for the species (CDFW 2015, USFWS 2017a). The Project area is within the range of CTS and has suitable habitat (i.e., upland and riparian habitat). CTS have been determined to be | This comment addresses potential impacts related to California Tiger Salamander (CTS) and provides recommendations to enhance the mitigation measures included in Section 4.4, Biological Resources, of the Draft PEIR.<br>Mitigation Measures BIO-1.1 and BIO-1.2 include specifications for determining the potential site-specific environmental impacts to special species, including CTS. Mitigation Measure BIO-1.1 states that habitat for special-species shall be avoided where possible, but when that is not possible, avoidance and minimization efforts shall be incorporated into project plans to lessen potential environmental impacts. Mitigation Measure BIO-1.2 requires that if direct or direct or incidental take of a listed species occurs, consultation with the resources agencies and/or additional permitting may be required. Agency consultation through the CDFW 2081 and USFWS Section 7 or Section 10 permitting processes shall take place prior to any action that may result in the direct or incidental take of a listed species. Specific mitigation measures for direct or incidental impacts to a listed species will be determined on a case-by-case basis through agency consultation during the review process for discretionary projects.<br>Although these mitigation measures do not specify the |

## Table 3.A: Comments and Responses Matrix

| Letter/ Comment Number | Comment | Response |
|---|---|---|
| | physiologically capable of dispersing up to approximately 1.5 miles from seasonally flooded wetlands (Searcy and Shaffer 2011) and have been documented to occur near the Project area (CDFW 2020). Given the presence of suitable habitat within the Project area, potential ground-disturbing activities may significantly impact local populations of CTS.<br>Recommended Potentially Feasible Mitigation Measure(s)<br>Because suitable habitat for CTS is present within and adjacent to the Project site, CDFW recommends conducting the following evaluation of individual Project sites, incorporating the following mitigation measures into the program environmental impact report (PEIR) prepared for this Project, and that these measures be made conditions of approval for the Project.<br>Recommended Mitigation Measure 1: Focused CTS Protocol-level Surveys<br>CDFW recommends that a qualified biologist conduct protocol-level surveys in accordance with the USFWS "Interim Guidance on Site Assessment and Field Surveys for Determining Presence or a Negative Finding of the California Tiger Salamander" (USFWS 2003) at the appropriate time of year to determine the existence and extent of CTS breeding and refugia habitat. Please note that the recommended survey protocol starts with a site assessment to determine if suitable habitat occurs within a Project site. If suitable habitat exists, the protocol-level surveys for CTS require more than one survey season and are dependent upon sufficient rainfall to complete. As a result, consultation with CDFW and the USFWS is recommended well in advance of beginning the surveys and prior to any planned vegetation- or ground-disturbing activities. CDFW advises that the protocol-level survey include a 100-foot buffer around the Project area in all areas of wetland and upland habitat that could support CTS. Please be advised that protocol-level survey results are viable for two years after the results are reviewed by CDFW.<br>Recommended Mitigation Measure 2: CTS Avoidance<br>If suitable habitat features exist at an individual Project site and CTS protocol-level surveys as described in Mitigation Measure 1 are not conducted, CDFW advises that a minimum 50-foot no-disturbance buffer be delineated around all small mammal burrows in suitable upland refugia habitat within and/or adjacent to an individual Project site. Further, CDFW recommends potential or known breeding habitat within and/or adjacent to the Project site be delineated with a minimum 250-foot no-disturbance buffer. Both upland burrow and wetland breeding no-disturbance buffers are intended to minimize | recommendations identified in this comment, the mitigation measure requirements for avoidance if possible and continued coordination with resource agencies ensure that potential impacts to CTS from future discretionary projects are addressed.<br>In response to this comment, and shown in Chapter 4.0 of this Response to Comments Document, Mitigation Measure BIO-1.1 through Mitigation Measure BIO-1.4 have been revised as shown below. The revisions provide clarifications and do not constitute significant new information requiring recirculation of the Draft PEIR.<br>**Mitigation Measure BIO-1.1:** Construction of a proposed project shall avoid, where possible, vegetation communities that provide suitable habitat for a special-status species known to occur within the Planning Area. If construction within potentially suitable habitat must occur, the presence/absence of any special-status plant or wildlife species must be determined prior to construction, to determine if the habitat supports any special-status species. If a special-status species are determined to occupy any portion of a project site, avoidance and minimization measures shall be incorporated into the construction phase of a project to avoid direct or incidental take of a listed species to the greatest extent feasible. Specific mitigation measures for direct or incidental impacts to special-status species shall be determined on a case-by-case basis through agency consultation during the review process for discretionary projects, and shall be consistent with survey protocols and mitigations measures recommended by the agency at the time of consultation.<br>**Mitigation Measure BIO-1.2:** Direct or incidental take of any state or federally listed species shall be avoided to the greatest extent feasible. If construction of a proposed project will result in the direct or incidental take of a listed species, consultation with the resources agencies and/or additional permitting may be required. Agency consultation through the CDFW 2081 and USFWS Section 7 or Section 10 permitting processes shall take place prior to any |

## Table 3.A: Comments and Responses Matrix

| Letter/ Comment Number | Comment | Response |
|---|---|---|
| | impacts to CTS habitat and avoid take of individuals. Alternatively, the applicant can assume presence of CTS within the Project site and obtain from CDFW a State Incidental Take Permit (ITP) in accordance with Fish and Game Code section 2081(b).<br>Recommended Mitigation Measure 3: CTS Take Authorization<br>If through surveys it is determined that CTS are occupying or have the potential to occupy an individual Project site, consultation with CDFW is warranted to determine if the Project can avoid take. If take cannot be avoided, take authorization would be warranted prior to initiating ground-disturbing activities to comply with CESA. Take authorization would occur through issuance of an ITP by CDFW, pursuant to Fish and Game Code section 2081(b). As stated above, in the absence of protocol surveys, the applicant can assume presence of CTS within the Project site and obtain an ITP from CDFW. | action that may result in the direct or incidental take of a listed species. Specific mitigation measures for direct or incidental impacts to a listed species shall~~will~~ be determined on a case-by-case basis through agency consultation. Specific mitigation measures for direct or incidental impacts to state or federally listed species shall be determined on a case-by-case basis through agency consultation during the review process for discretionary projects, and shall be consistent with survey protocols and mitigations measures recommended by the agency at the time of consultation.<br>**Mitigation Measure BIO-1.3:** Development within the Planning Area shall avoid, where possible, special-status natural communities and vegetation communities that provide suitable habitat for special-status species. If a proposed project will result in the loss of a special-status natural community or suitable habitat for special-status species, compensatory habitat-based mitigation is required under CEQA and CESA. Mitigation shall consist of preserving on-site habitat, restoring similar habitat or purchasing off-site credits from an approved mitigation bank. Compensatory mitigation shall be determined through consultation with the City and/or resource agencies. An appropriate mitigation strategy and ratio shall be agreed upon by the developer and lead agency to reduce project impacts to special-status natural communities to a less than significant level. Agreed-upon mitigation ratios shall depend on the quality of the habitat and presence/absence of a special-status species. Specific mitigation measures for direct or incidental impacts to special-status natural communities and vegetation communities shall be determined on a case-by-case basis through agency consultation during the review process for discretionary projects, and shall be consistent with survey protocols and mitigations measures recommended by the agency at the time of consultation~~The specific mitigation for project level impacts shall be determined on a case-by-case basis~~. |

## Table 3.A: Comments and Responses Matrix

| Letter/ Comment Number | Comment | Response |
|---|---|---|
| | | **Mitigation Measure BIO-1.4:** Proposed projects within the Planning Area should avoid, if possible, construction within the general nesting season of February through August for avian species protected under Fish and Game Code 3500 and the Migratory Bird Treaty Act (MBTA), if it is determined that suitable nesting habitat occurs on a project site. If construction cannot avoid the nesting season, a pre-construction clearance survey shall be conducted by a qualified biologist to determine if any nesting birds or nesting activity is observed on or within 500-feet of a project site. If an active nest is observed during the survey, a biological monitor shall be on site to ensure that no proposed project activities would impact the active nest. A suitable buffer shall be established around the active nest until the nestlings have fledged and the nest is no longer active. Project activities may continue in the vicinity of the nest only at the discretion of the biological monitor. Prior to commencement of grading activities and issuance of any building permits, the Director of the City of Fresno Planning and Development Department, or designee, shall verify that all proposed project grading and construction plans include specific documentation regarding the requirements of the Migratory Bird Treaty Act (MBTA) and California Fish and Game Code Section 3503, that preconstruction surveys have been completed and the results reviewed by staff, and that the appropriate buffers (if needed) are noted on the plans and established in the field. Specific mitigation measures for direct or incidental impacts to avian species protected under Fish and Game Code 3500 and the Migratory Bird Treaty Act (MBTA) shall be determined on a case-by-case basis through agency consultation during the review process for discretionary projects, and shall be consistent with survey protocols and mitigations measures recommended by the agency at the time of consultation.<br><br>In addition, and shown in Chapter 4.0 of this Response to Comments Document, Mitigation Measure BIO-2.1 through Mitigation Measure |

## Table 3.A: Comments and Responses Matrix

| Letter/ Comment Number | Comment | Response |
|---|---|---|
| | | BIO-2.3 have been revised as follows to address the application of current CDFW protocols during project-level site surveys:<br>**Mitigation Measure BIO-2.1:** A pre-construction clearance survey, following current CDFW protocols, shall be conducted by a qualified biologist to determine if a proposed project will result in the removal or impact to any riparian habitat and/or a special-status natural community with potential to occur in the Planning Area, compensatory habitat-based mitigation shall be required to reduce project impacts. Compensatory mitigation shall~~must~~ involve the preservation or restoration or the purchase of off-site mitigation credits for impacts to riparian habitat and/or a special-status natural community. Mitigation shall~~must~~ be conducted in-kind or within an approved mitigation bank in the region. The specific mitigation ratio for habitat-based mitigation shall be determined through consultation with the appropriate agency (i.e., CDFW or USFWS) on a case-by-case basis. The project applicant/developer for a proposed project shall develop and implement appropriate mitigation regarding impacts on their respective jurisdictions.<br>**Mitigation Measure BIO-2.2:** A pre-construction clearance survey, following current CDFW protocols, shall be conducted by a qualified biologist to determine if a proposed project will result in significant impacts to streambeds or waterways protected under Section 1600 of Fish and Wildlife Code and Section 404 of the CWA. The project applicant/developer for a proposed project shall consult with partner agencies such as CDFW and/or USACE to develop and implement appropriate mitigation regarding impacts on their respective jurisdictions, determination of mitigation strategy, and regulatory permitting to reduce impacts, as required for projects that remove riparian habitat and/or alter a streambed or waterway. The project applicant/developer shall implement mitigation as directed by the agency with jurisdiction over the particular impact identified.<br>**Mitigation Measure BIO-2.3:** Prior to project approval, a |

## Table 3.A: Comments and Responses Matrix

| Letter/ Comment Number | Comment | Response |
|---|---|---|
| | | pre-construction clearance survey, following current CDFW protocols, shall be conducted by a qualified biologist to determine if a proposed project will result in project-related impacts to riparian habitat or a special-status natural community or if it may result in direct or incidental impacts to special-status species associated with riparian or wetland habitats. The project applicant/developer for a proposed project shall be obligated to address project-specific impacts to special-status species associated with riparian habitat through agency consultation, development of a mitigation strategy, and/or issuing incidental take permits for the specific special-status species, as determined by the CDFW and/or USFWS. |
| A1-6 | COMMENT 2: Swainson's Hawk (SWHA)<br>Issue: SWHA have been documented in the Project area (CNDDB 2020). SWHA have the potential to nest in areas with large, mature trees which are present at Woodward and Roeding parks as well as along the San Joaquin River. SWHA foraging habitat exists within the Project area along the southwestern and southeastern edges of Fresno in the form of agricultural land.<br>Specific impacts: Without appropriate avoidance and minimization measures for SWHA, potential significant impacts that may result from Project activities include: nest abandonment, loss of nest trees, loss of foraging habitat that would reduce nesting success (loss or reduced health or vigor of eggs or young), and direct mortality. Any take of SWHA without appropriate incidental take authorization would be a violation of Fish and Game Code.<br>Evidence impact is potentially significant: SWHA exhibit high nest-site fidelity year after year and lack of suitable nesting habitat in the San Joaquin Valley limits their local distribution and abundance (CDFW 2016). Approval of the PEIR may lead to subsequent ground-disturbing activities that involve noise, groundwork, and movement of workers that could affect nests and has the potential to result in nest abandonment and loss of foraging habitat, significantly impacting local nesting SWHA.<br>Recommended Potentially Feasible Mitigation Measure(s)<br>Because suitable nesting and foraging habitat for SWHA is present in the Project area, CDFW recommends conducting the following evaluation of individual Project sites, | This comment addresses potential impacts related Swainson's Hawk (SWHA) and provides recommendations to enhance the mitigation measures included in Section 4.4, Biological Resources, of the Draft PEIR.<br>As discussed above in response to Comment A1-5, Mitigation Measures BIO-1.1 and BIO-1.2 include specifications for determining the potential site-specific environmental impacts to special species, including SWHA. Mitigation Measure BIO-1.1 states that habitat for special-species shall be avoided where possible, but when that is not possible, avoidance and minimization efforts shall be incorporated into project plans to lessen potential environmental impacts. Mitigation Measure BIO-1.2 requires that if direct or direct or incidental take of a listed species occurs, consultation with the resources agencies and/or additional permitting may be required. Agency consultation through the CDFW 2081 and USFWS Section 7 or Section 10 permitting processes shall take place prior to any action that may result in the direct or incidental take of a listed species. Specific mitigation measures for direct or incidental impacts to a listed species will be determined on a case-by-case basis through agency consultation during the review process for discretionary projects.<br>Mitigation Measure BIO-1.4 addresses potential impacts related to |

## Table 3.A: Comments and Responses Matrix

| Letter/ Comment Number | Comment | Response |
|---|---|---|
| | incorporating the following mitigation measures into the PEIR prepared for this Project, and that these measures be made conditions of approval for the Project.<br>Recommended Mitigation Measure 4: SWHA Surveys<br>CDFW recommends that a qualified wildlife biologist determine if SWHA foraging habitat occurs on an individual Project site and/or if suitable nesting habitat is present within 0.5-mile of the site. If suitable SWHA nesting habitat is present within 0.5-mile of an individual Project-site, CDFW recommends consultation with CDFW to determine if SWHA nest surveys are warranted. Absent consultation, CDFW recommends that a qualified wildlife biologist conduct surveys for nesting SWHA following the survey methods developed by the Swainson's Hawk Technical Advisory Committee (SWHA TAC 2000) prior to future project implementation in relation to the PEIR. The SWHA TAC recommends a 0.5-mile survey distance from the limits of disturbance. The survey protocol includes early season surveys to assist the project proponent in implementing necessary avoidance and minimization measures, and in identifying active nest sites prior to initiating ground-disturbing activities. If suitable nesting habitat is within 0.5-mile of an individual Project site, SHWA nest surveys were warranted, and ground-disturbing activities will take place during the normal bird breeding season (March 1 through September 15), CDFW recommends that additional pre-activity surveys for active nests be conducted by a qualified biologist no more than 10 days prior to the start of Project implementation to ensure that SHWA have not begun nesting immediately before Project activities begin.<br>Recommended Mitigation Measure 5: No-disturbance Buffer<br>Mitigation Measure BIO-1.4 of the PEIR states that a suitable buffer shall be established around all active nests. CDFW recommends a minimum no-disturbance buffer of 0.5-mile be delineated around active nests until the breeding season has ended or until a qualified biologist has determined that the birds have fledged and are no longer reliant upon the nest or parental care for survival. If a 0.5-mile no-disturbance buffer from an active nest is not feasible, consultation with CDFW is warranted to discuss how to implement the Project and avoid take.<br>Recommended Mitigation Measure 6: SWHA Take Authorization<br>If take cannot be avoided, take authorization through the issuance of an ITP, pursuant to Fish and Game Code section 2081(b) is necessary to comply with CESA. | avian specifies protected under the Migratory Bird Treaty Act (MBTA). This measure addresses potential impacts that would occur outside of the nesting season, by requiring pre-construction clearance surveys and the establishment of a suitable buffer around active nesting sites. Additionally, the measure requires that, prior to commencement of grading activities and issuance of any building permits, the City shall verify that all proposed project grading and construction plans include specific documentation regarding the requirements of the Migratory Bird Treaty Act (MBTA) and California Fish and Game Code Section 3503, that preconstruction surveys have been completed and the results reviewed by staff, and that the appropriate buffers (if needed) are noted on the plans and established in the field.<br>Although Mitigation Measure BIO-1.4 does not specify the recommendations identified in this comment, the mitigation measure requirements for avoidance, if possible, including the recommendation regarding replacement trees, and continued coordination with resource agencies ensure that potential impacts to SWHA from future discretionary projects are addressed.<br>As discussed and shown above in response to Comment A1-5, Mitigation Measure BIO-1.1 through Mitigation Measure BIO-1.4 have been amended to identify the need for agency consultation and application of applicable protocols at the time of project approval. |

## Table 3.A: Comments and Responses Matrix

| Letter/ Comment Number | Comment | Response |
|---|---|---|
| | Recommended Mitigation Measure 7: Loss of SWHA Foraging Habitat<br>If SWHA foraging habitat occurs on an individual Project site, CDFW recommends compensation for the loss of SWHA foraging habitat as described in CDFW's "Staff Report Regarding Mitigation for Impacts to Swainson's Hawks" (CDFG 1994) to reduce impacts to foraging habitat to less than significant. The Staff Report recommends that mitigation for habitat loss occur within a minimum distance of 10 miles from known nest sites. CDFW has the following recommendations based on the Staff Report:<br>● For projects within 1 mile of an active nest tree, a minimum of 1 acre of habitat management (HM) land for each acre of development is advised.<br>● For projects within 5 miles of an active nest but greater than 1 mile, a minimum of ¾ acre of HM land for each acre of development is advised.<br>● For projects within 10 miles of an active nest tree but greater than 5 miles from an active nest tree, a minimum of ½ acre of HM land for each acre of development is advised.<br>Recommended Mitigation Measure 8: SWHA Nest Trees<br>CDFW recommends that the removal of known raptor nest trees, even outside of the nesting season, be replaced with an appropriate native tree species planting at a ratio of 3:1 at or near the Project area or in another area that will be protected in perpetuity to reduce impacts resulting from the loss of nesting habitat. | |
| A1-7 | COMMENT 3: Crotch Bumble Bee (CBB)<br>Issue: On June 28, 2019, the Fish and Game Commission published findings of its decision to advance CBB to candidacy as endangered. Pursuant to Fish and Game Code section 2074.6, CDFW has initiated a status review report to inform the Commission's decision on whether listing of CBB, pursuant to CESA, is warranted. During the candidacy period, consistent with CEQA Guidelines section 15380, the status of the CBB as an endangered candidate species under CESA (Fish & G. Code, § 2050 et seq.) qualifies it as an endangered, rare, or threatened species under CEQA. It is unlawful to import into California, export out of California, or take, possess, purchase, or sell within California, CBB and any part or product thereof, or attempt any of those acts, except as authorized pursuant to CESA. Under Fish and Game Code section 86, take means to hunt, pursue, catch, capture, or kill, or to attempt to hunt pursue, catch, capture, or kill. Consequently, take of CBB during the status review period is prohibited unless authorization pursuant | This comment addresses potential impacts related to the Crotch Bumble Bee (CBB) and provides recommendations to enhance the mitigation measures included in Section 4.4, Biological Resources, of the Draft PEIR.<br>As identified in Appendix D of the Draft PEIR, the CBB was identified as Candidate Endangered in a California Natural Diversity Database (CNDDB) data search that was conducted in September 2019, and included as Appendix D of the Draft PEIR. Although not specifically identified in the text of Section 4.4, Biological Resources, of the Draft PEIR, Mitigation Measures BIO-1.1 through BIO-1.3 addresses potential environmental impacts to endangered species within the Planning Area. As stated above in response to Comment A1-5, Mitigation Measures BIO-1.1 and BIO-1.2 include specifications for |

## Table 3.A: Comments and Responses Matrix

| Letter/ Comment Number | Comment | Response |
|---|---|---|
| | to CESA is obtained.<br><br>CBB have been documented to occur within the vicinity of the Project area (CDFW 2020). Suitable CBB habitat includes areas of grasslands and upland scrub that contain requisite habitat elements, such as small mammal burrows. CBB primarily nest in late February through late October underground in abandoned small mammal burrows, but may also nest under perennial bunch grasses or thatched annual grasses, under brush piles, in old bird nests, and in dead trees or hollow logs (Williams et al. 2014; Hatfield et al. 2015). Overwintering sites utilized by CBB mated queens include soft, disturbed soil (Goulson 2010), or under leaf litter or other debris (Williams et al. 2014). Therefore, potential ground disturbance and vegetation removal associated with Project implementation may significantly impact local CBB populations.<br><br>Specific impact: The PEIR does not address CBB. Without appropriate avoidance and minimization measures for CBB, potentially significant impacts associated with ground- and vegetation-disturbing activities associated with implementation of the Project, and related future projects, could include loss of foraging plants, changes in foraging behavior, burrow collapse, nest abandonment, reduced nest success, reduced health and vigor of eggs, young and/or queens, in addition to direct mortality in violation of Fish and Game Code.<br><br>Evidence impact is potentially significant: CBB was once common throughout most of the central and southern California; however, it now appears to be absent from most of it, especially in the central portion of its historic range within California's Central Valley (Hatfield et al. 2014). Analyses by the Xerces Society et al. (2018) suggest there have been sharp declines in relative abundance by 98% and persistence by 80% over the last ten years.<br><br>Recommended Potentially Feasible Mitigation Measure(s)<br><br>To evaluate potential impacts to CBB associated with the Project, CDFW recommends incorporating the following mitigation measures into the PEIR prepared for this Project and implementing the following mitigation measures as a condition of approval for the Project.<br><br>Recommended Mitigation Measure 9: CBB Surveys<br><br>CDFW recommends that a qualified biologist conduct focused surveys for CBB and their requisite habitat features prior to Project implementation to evaluate impacts resulting from potential ground- and vegetation-disturbing activities that may result from the | determining the potential site-specific environmental impacts to special species. Mitigation Measure BIO-1.1 states that habitat for special-species shall be avoided where possible, but when that is not possible, avoidance and minimization efforts shall be incorporated into project plans to lessen potential environmental impacts. Mitigation Measure BIO-1.2 requires that if direct or direct or incidental take of a listed species occurs, consultation with the resources agencies and/or additional permitting may be required. Agency consultation through the CDFW 2081 and USFWS Section 7 or Section 10 permitting processes shall take place prior to any action that may result in the direct or incidental take of a listed species. Specific mitigation measures for direct or incidental impacts to a listed species will be determined on a case-by-case basis through agency consultation during the review process for discretionary projects.<br><br>Although these mitigation measures do not specify the recommendations identified in this comment, the mitigation measure requirements for avoidance if possible and continued coordination with resource agencies ensure that potential impacts to CBB from future discretionary projects are addressed. As discussed and shown above in response to Comment A1-5, Mitigation Measure BIO-1.1 through Mitigation Measure BIO-1.4 have been amended to identify the need for agency consultation and application of applicable protocols at the time of project approval. |

## Table 3.A: Comments and Responses Matrix

| Letter/ Comment Number | Comment | Response |
|---|---|---|
| | approval of the PEIR.<br>Recommended Mitigation Measure 10: CBB Take Avoidance<br>If surveys cannot be completed, CDFW recommends that all small mammal burrows and thatched/bunch grasses be avoided by a minimum of 50 feet to avoid take and potentially significant impacts. If ground-disturbing activities will occur during the overwintering period (October through February), consultation with CDFW is warranted to discuss how to implement Project activities and avoid take. Any detection of CBB prior to or during Project implementation warrants consultation with CDFW to discuss how to avoid take.<br>Recommended Mitigation Measure 11: CBB Take Authorization<br>If CBB is identified during surveys, consultation with CDFW is warranted to determine if the Project can avoid take. If take cannot be avoided, take authorization prior to any ground-disturbing activities may be warranted. Take authorization would occur through issuance of an ITP by CDFW, pursuant to Fish and Game Code section 2081(b). | |
| A1-8 | COMMENT 4: San Joaquin Kit Fox (SJKF)<br>Issue: SJKF have been documented to occur within the vicinity of the Project area (CDFW 2020). Review of aerial imagery indicates that the Project area is bordered by and contains some patches of annual grassland. SJKF den in right-of-ways, vacant lots, etc., and populations can fluctuate over time. Presence/absence in any one year is not necessarily a reliable indicator of SJKF potential to occur on a site. SJKF may be attracted to project sites due to the type and level of ground-disturbing activities and the loose, friable soils resulting from intensive ground disturbance. As a result, there is potential for SJKF to colonize the Project sites or to occupy adjacent grassland.<br>Specific impact: Without appropriate avoidance and minimization measures for SJKF, potential significant impacts include den collapse, inadvertent entrapment, reduced reproductive success, reduction in health and vigor of young, and direct mortality of individuals.<br>Evidence impact is potentially significant: Habitat loss resulting from agricultural, urban, and industrial development is the primary threat to SJKF (Cypher et al. 2013). The Project area is adjacent to some of the only remaining undeveloped land in the vicinity, which is otherwise intensively managed for agriculture. Therefore, subsequent ground-disturbing activities have the potential to significantly impact local SJKF populations. | This comment addresses potential impacts related to the San Joaquin Kit Fox (SJKF) and provides recommendations to enhance the mitigation measures included in Section 4.4, Biological Resources, of the Draft PEIR.<br>Mitigation Measures BIO-1.1 and BIO-1.2 include specifications for determining the potential site-specific environmental impacts to special species, including SJKF. Mitigation Measure BIO-1.1 states that habitat for special-species shall be avoided where possible, but when that is not possible, avoidance and minimization efforts shall be incorporated into project plans to lessen potential environmental impacts. Mitigation Measure BIO-1.2 requires that if direct or direct or incidental take of a listed species occurs, consultation with the resources agencies and/or additional permitting may be required. Agency consultation through the CDFW 2081 and USFWS Section 7 or Section 10 permitting processes shall take place prior to any action that may result in the direct or incidental take of a listed species. Specific mitigation measures for direct or incidental impacts to a listed species will be determined on a case-by-case basis through agency consultation during the review process for discretionary projects. |

## Table 3.A: Comments and Responses Matrix

| Letter/ Comment Number | Comment | Response |
|---|---|---|
| | Recommended Potentially Feasible Mitigation Measure(s) (Regarding Environmental Setting and Related Impact Shortcoming)<br>To evaluate potential impacts to SJKF associated with the Project, CDFW recommends conducting the following evaluation of the Project area, incorporating the following mitigation measures into the EIR prepared for this Project, and that these measures be made conditions of approval for the Project.<br>Recommended Mitigation Measure 12: SJKF Habitat Assessment<br>CDFW recommends that a qualified biologist conduct a habitat assessment in advance of Project implementation, to determine if an individual Project site or its immediate vicinity contains suitable habitat for SJKF.<br>Recommended Mitigation Measure 13: SJKF Surveys<br>If any suitable habitat features occur on or adjacent to an individual Project site, consultation with CDFW is recommended to determine if SJKF surveys are warranted. If SJKF surveys are warranted, CDFW recommends assessing presence/absence of SJKF by conducting surveys following the USFWS "Standardized recommendations for protection of the San Joaquin kit fox prior to or during ground disturbance" (2011). When surveys are warranted, CDFW advises conducting these surveys in all areas of potentially suitable habitat no less than 14 days and no more than 30 days prior to beginning of ground-disturbing activities.<br>Recommended Mitigation Measure 14: SJKF Take Authorization<br>SJKF detection warrants consultation with CDFW to discuss how to avoid take, or if avoidance is not feasible, to acquire an Incidental Take Permit (ITP) prior to ground-disturbing activities, pursuant to Fish and Game Code § 2081(b). | Although these mitigation measures do not specify the recommendations identified in this comment, the mitigation measure requirements for avoidance if possible and continued coordination with resource agencies ensure that potential impacts to SJKF from future discretionary projects are addressed. As discussed and shown above in response to Comment A1-5, Mitigation Measure BIO-1.1 through Mitigation Measure BIO-1.4 have been amended to identify the need for agency consultation and application of applicable protocols at the time of project approval. |
| A1-9 | COMMENT 5: Least Bell's Vireo (LBV)<br>Issue: LBV is not specifically included in the PEIR and have been documented to occur within the Project area (CDFW 2020). Review of aerial imagery indicates the presence of riparian woodland vegetation, suitable to support LBV, within the Project area along the San Joaquin River and its vicinity. Therefore, the Project has the potential to impact LBV.<br>Specific impact: Without appropriate avoidance and minimization measures for LBV, potential significant impacts associated with Project development include nest abandonment, reduced reproductive success, and reduced health and vigor of eggs and/or young. | This comment addresses potential impacts related to the Least Bell's Vireo (LBV) and provides recommendations to enhance the mitigation measures included in Section 4.4, Biological Resources, of the Draft PEIR.<br>As stated in the comment, the LBV is not specifically listed in Section 4.4, Biological Resources of the Draft PEIR, however it is identified in the CNDDB data search conducted in September 2019, and included as Appendix D of the Draft PEIR. Although not specifically identified in the text of Section 4.4, Mitigation Measures BIO-1.1 through BIO- |

## Table 3.A: Comments and Responses Matrix

| Letter/ Comment Number | Comment | Response |
|---|---|---|
| | Evidence impact is potentially significant: LBV were abundant and widespread in the United States until the 1950s (Grinnell and Miller 1944). By the 1960s, they were considered scarce (Monson 1960), and by 1980, there were fewer than 50 pairs remaining (Edwards 1980), although this number had increased to 2,500 by 2004 (Kus and Whitfield 2005). The primary cause of decline for this species has been the loss and alteration of riparian woodland habitats (USFWS 2006). Fragmentation of their preferred habitat has also increased their exposure to brown-headed cowbird (Molothrus ater) parasitism (Kus 2002). Current threats to their preferred habitat include colonization by non-native plants and altered hydrology (diversion, channelization, etc.) (USFWS 2006).<br>Recommended Potentially Feasible Mitigation Measure(s) (Regarding Environmental Setting and Related Impact)<br>To evaluate potential impacts to LBV, CDFW recommends conducting the following evaluation of the Project site, incorporating the following mitigation measures into the PEIR prepared for this Project, and that these measures be made conditions of approval for the Project.<br>Recommended Mitigation Measure 15: LBV Habitat Assessment<br>CDFW recommends that a qualified biologist conduct a habitat assessment in advance of Project implementation, to determine if an individual Project site or its immediate vicinity contains suitable habitat for LBV. Although LBV inhabit riparian woodlands, the species has also been found to benefit from non-riparian systems including brushy fields, second-growth forest or woodland, scrub oak, coastal chaparral, and mesquite brushlands (Kus and Miner 1989 in Poulin et al. 2011).<br>Recommended Mitigation Measure 16: LBV Avoidance<br>CDFW agrees with Mitigation Measure BIO-1.4 that nesting birds should be avoided if possible. LBV have the potential to occur outside the timeframe listed in Mitigation Measure BIO-1.4; thus, CDFW recommends that Project activities be timed to avoid the typical bird breeding season (February 1 through September 15).<br>Recommended Mitigation Measure 17: LBV Surveys<br>If Project activities must take place during the typical bird breeding season, and suitable LBV habitat is detected during habitat assessments at or adjacent to Project sites, CDFW recommends assessing presence/absence of LBV by conducting surveys following the USFWS' "Least Bell's Vireo Survey Guidelines" (2001) well in advance of the start of | 1.3 addresses potential environmental impacts to endangered species within the Planning Area. As stated above in responses to several comments, Mitigation Measures BIO-1.1 and BIO-1.2 include specifications for determining the potential site-specific environmental impacts to special species, including LBV. Mitigation Measure BIO-1.1 states that habitat for special-species shall be avoided where possible, but when that is not possible, avoidance and minimization efforts shall be incorporated into project plans to lessen potential environmental impacts. Mitigation Measure BIO-1.2 requires that if direct or direct or incidental take of a listed species occurs, consultation with the resources agencies and/or additional permitting may be required. Agency consultation through the CDFW 2081 and USFWS Section 7 or Section 10 permitting processes shall take place prior to any action that may result in the direct or incidental take of a listed species. Specific mitigation measures for direct or incidental impacts to a listed species will be determined on a case-by-case basis through agency consultation during the review process for discretionary projects.<br>Although these mitigation measures do not specify the recommendations identified in this comment, the mitigation measure requirements for avoidance if possible and continued coordination with resource agencies ensure that potential impacts to LBV from future discretionary projects are addressed. As discussed and shown above in response to Comment A1-5, Mitigation Measure BIO-1.1 through Mitigation Measure BIO-1.4 have been amended to identify the need for agency consultation and application of applicable protocols at the time of project approval. |

## Table 3.A: Comments and Responses Matrix

| Letter/ Comment Number | Comment | Response |
|---|---|---|
| | Project implementation to evaluate presence/absence of LBV nesting in proximity to Project activities, and to evaluate potential Project-related impacts and permitting needs. Additionally, CDFW advises conducting focused pre-construction surveys for LBV in all areas of potentially suitable habitat within 10 days of Project implementation, when initiated during the bird breeding season to ensure LBV have not begun nesting activities between the completion of surveys and the start of Project activities.<br>Recommended Mitigation Measure 18: LBV Take Authorization<br>LBV detection warrants consultation with CDFW to discuss how to avoid take, or if avoidance is not feasible, to acquire an ITP prior to ground-disturbing activities, pursuant to Fish and Game Code section 2081(b). | |
| A1-10 | COMMENT 6: Burrowing Owl (BUOW)<br>Issue: BUOW are known to occur within the Project area. BUOW inhabit open grassland containing small mammal burrows, a requisite habitat feature used by BUOW for nesting and cover. Habitat both within and bordering the Project site, supports grassland habitat.<br>Specific impact: Potentially significant direct impacts associated with subsequent activities include burrow collapse, inadvertent entrapment, nest abandonment, reduced reproductive success, reduction in health and vigor of eggs and/or young, and direct mortality of individuals.<br>Evidence impact is potentially significant: BUOW rely on burrow habitat year-round for their survival and reproduction. Habitat loss and degradation are considered the greatest threats to BUOW in California's Central Valley (Gervais et al. 2008). The Project site is bordered by some of the only remaining undeveloped land in the vicinity, which is otherwise intensively managed for agriculture. Therefore, subsequent ground-disturbing activities associated with the Project have the potential to significantly impact local BUOW populations. In addition, and as described in CDFW's "Staff Report on Burrowing Owl Mitigation" (CDFG 2012), excluding and/or evicting BUOW from their burrows is considered a potentially significant impact under CEQA.<br>Recommended Potentially Feasible Mitigation Measure(s) (Regarding Environmental Setting and Related Impact)<br>To evaluate potential impacts to BUOW, CDFW recommends conducting the following evaluation of the Project site, incorporating the following mitigation measures into the PEIR prepared for this Project, and that these measures be made conditions of approval | This comment addresses potential impacts related to Burrowing Owl (BUOW) and provides recommendations to enhance the mitigation measures included in Section 4.4, Biological Resources, of the Draft PEIR.<br>Mitigation Measures BIO-1.1 and BIO-1.2 include specifications for determining the potential site-specific environmental impacts to special species, including BUOW. Mitigation Measure BIO-1.1 states that habitat for special-species shall be avoided where possible, but when that is not possible, avoidance and minimization efforts shall be incorporated into project plans to lessen potential environmental impacts. Mitigation Measure BIO-1.2 requires that if direct or direct or incidental take of a listed species occurs, consultation with the resources agencies and/or additional permitting may be required. Agency consultation through the CDFW 2081 and USFWS Section 7 or Section 10 permitting processes shall take place prior to any action that may result in the direct or incidental take of a listed species. Specific mitigation measures for direct or incidental impacts to a listed species will be determined on a case-by-case basis through agency consultation during the review process for discretionary projects.<br>Although these mitigation measures do not specify the recommendations identified in this comment, the mitigation measure requirements for avoidance if possible and continued |

## Table 3.A: Comments and Responses Matrix

| Letter/ Comment Number | Comment | Response |
|---|---|---|
| | for the Project.<br>Recommended Mitigation Measure 19: BUOW Surveys<br>CDFW recommends assessing presence/absence of BUOW by having a qualified biologist conduct surveys following the California Burrowing Owl Consortium's "Burrowing Owl Survey Protocol and Mitigation Guidelines" (CBOC 1993) and CDFW's "Staff Report on Burrowing Owl Mitigation" (CDFG 2012). Please note that these protocols start with a habitat evaluation to determine if suitable habitat is present. If suitable habitat is present, CBOC and CDFW's Staff Report suggest three or more surveillance surveys conducted during daylight with each visit occurring at least three weeks apart during the peak breeding season (April 15 to July 15), when BUOW are most detectable. These surveys are to determine if there are more BUOW in addition to the December 2017 observation surveyed for the Project.<br>Recommended Mitigation Measure 20: BUOW Avoidance<br>CDFW recommends no-disturbance buffers, as outlined in the "Staff Report on Burrowing Owl Mitigation" (CDFG 2012), be implemented prior to and during any ground-disturbing activities. Specifically, CDFW's Staff Report recommends that impacts to occupied burrows be avoided in accordance with the following table unless a qualified biologist approved by CDFW verifies through non-invasive methods that either: 1) the birds have not begun egg laying and incubation; or 2) that juveniles from the occupied burrows are foraging independently and are capable of independent survival.<br>***[Note to Reader: A table included as a part of this comment is included in its entirety in Comment A1-11, included in Appendix K: Public Comment Letters on the Draft PEIR.]***<br>Recommended Mitigation Measure 21: BUOW Passive Relocation and Mitigation<br>If BUOW are found within these recommended buffers and avoidance is not possible, it is important to note that according to the Staff Report (CDFG 2012), exclusion is not a take avoidance, minimization, or mitigation method and is considered a potentially significant impact under CEQA. However, if necessary, CDFW recommends that burrow exclusion be conducted by qualified biologists and only during the non-breeding season, before breeding behavior is exhibited and after the burrow is confirmed empty through non-invasive methods, such as surveillance. CDFW recommends replacement of occupied burrows with artificial burrows at a ratio of 1 burrow collapsed to 1 artificial burrow constructed (1:1) as mitigation for the potentially significant impact of evicting BUOW. BUOW may attempt to colonize or re-colonize an area that will be impacted; thus, CDFW recommends ongoing | coordination with resource agencies ensure that potential impacts to BUOW from future discretionary projects are addressed. As discussed and shown above in response to Comment A1-5, Mitigation Measure BIO-1.1 through Mitigation Measure BIO-1.4 have been amended to identify the need for agency consultation and application of applicable protocols at the time of project approval. |

## Table 3.A: Comments and Responses Matrix

| Letter/ Comment Number | Comment | Response |
|---|---|---|
| | surveillance, at a rate that is sufficient to detect BUOW if they return. | |
| A1-11 | COMMENT 7: Tricolored Blackbird (TRBL)<br>Issue: TRBL occur within or near the Project area (CDFW 2020). Review of aerial imagery indicates that the Project area has or is near to dense low vegetation fields that may serve as nest colony sites.<br>Specific impact: Without appropriate avoidance and minimization measures for TRBL, potential significant impacts include nest and/or colony abandonment, reduced reproductive success, and reduced health and vigor of eggs and/or young.<br>Evidence impact would be significant: As mentioned above, aerial imagery indicates that the Project site is near dense low vegetation fields that may serve as nest colony sites. TRBL aggregate and nest colonially, forming colonies of up to 100,000 nests (Meese et al. 2014). Approximately 86% of the global population is found in the San Joaquin Valley (Kelsey 2008, Weintraub et al. 2016). Increasingly, TRBL are forming larger colonies that contain progressively larger proportions of the species' total population (Kelsey 2008). In 2008, for example, 55% of the species' global population nested in only two colonies, which were located in silage fields (Kelsey 2008). In 2017, approximately 30,000 TRBL were distributed among only 16 colonies in Merced County (Meese 2017). Nesting can occur synchronously, with all eggs laid within one week (Orians 1961). For these reasons, depending on timing, disturbance to nesting colonies can cause abandonment, significantly impacting TRBL populations (Meese et al. 2014).<br>Recommended Potentially Feasible Mitigation Measure(s)<br>CDFW recommends conducting the following evaluation of the Project site, editing the PEIR to include the following measures specific to TRBL, and that these measures be made conditions of approval for the Project.<br>Recommended Mitigation Measure 22: TRBL Habitat Assessment<br>CDFW recommends that a qualified biologist conduct a habitat assessment of the Project site in advance of Project implementation, to determine if an individual Project site or its vicinity contains suitable habitat for TRBL.<br>Recommended Mitigation Measure 23: TRBL Surveys<br>If an individual Project site contains suitable habitat for TRBL, CDFW recommends that Project activities be timed to avoid the typical bird breeding season (February 1 through September 15). However, if Project activities must take place during that time, CDFW | This comment addresses potential impacts related to Tricolored Blackbird (TRBL) and provides recommendations to enhance the mitigation measures included in Section 4.4, Biological Resources, of the Draft PEIR.<br>Mitigation Measures BIO-1.1 and BIO-1.2 include specifications for determining the potential site-specific environmental impacts to special species, including TRBL. Mitigation Measure BIO-1.1 states that habitat for special-species shall be avoided where possible, but when that is not possible, avoidance and minimization efforts shall be incorporated into project plans to lessen potential environmental impacts. Mitigation Measure BIO-1.2 requires that if direct or direct or incidental take of a listed species occurs, consultation with the resources agencies and/or additional permitting may be required. Agency consultation through the CDFW 2081 and USFWS Section 7 or Section 10 permitting processes shall take place prior to any action that may result in the direct or incidental take of a listed species. Specific mitigation measures for direct or incidental impacts to a listed species will be determined on a case-by-case basis through agency consultation during the review process for discretionary projects.<br>Although these mitigation measures do not specify the recommendations identified in this comment, the mitigation measure requirements for avoidance if possible and continued coordination with resource agencies ensure that potential impacts to TRBL from future discretionary projects are addressed. As discussed and shown above in response to Comment A1-5, Mitigation Measure BIO-1.1 through Mitigation Measure BIO-1.4 have been amended to identify the need for agency consultation and application of applicable protocols at the time of project approval. |

## Table 3.A: Comments and Responses Matrix

| Letter/ Comment Number | Comment | Response |
|---|---|---|
| | recommends that a qualified wildlife biologist conduct surveys for nesting TRBL no more than 10 days prior to the start of implementation to evaluate presence/absence of TRBL nesting colonies in proximity to Project activities and to evaluate potential Project-related impacts.<br>Recommended Mitigation Measure 24: TRBL Avoidance<br>If an active TRBL nesting colony is found during pre-activity surveys, CDFW recommends implementation of a minimum 300-foot no-disturbance buffer in accordance with CDFW's "Staff Guidance Regarding Avoidance of Impacts to Tricolored Blackbird Breeding Colonies on Agricultural Fields in 2015" (CDFW 2015b). CDFW advises that this buffer remain in place until the breeding season has ended or until a qualified biologist has determined that nesting has ceased, the birds have fledged, and are no longer reliant upon the colony or parental care for survival. It is important to note that TRBL colonies can expand over time and for this reason, the colony may need to be reassessed to determine the extent of the breeding colony within 10 days prior to Project initiation.<br>Recommended Mitigation Measure 25: TRBL Take Authorization<br>In the event that a TRBL nesting colony is detected during surveys, consultation with CDFW is warranted to discuss how to implement the Project and avoid take, or if avoidance is not feasible, to acquire an ITP, pursuant to Fish and Game Code Section 2081(b), prior to any ground-disturbing activities. | |
| A1-12 | COMMENT 8: Special-Status Bat Species<br>Issue: Pallid bat, western mastiff bat, spotted bat, and hoary bat have been documented to occur in the vicinity of the Project area (CDFW 2020). In addition, habitat features that have the potential to support species is present within the Project area. However, the PEIR does not include specific measures to mitigate impacts to special-status bat species.<br>Specific impact: Without appropriate avoidance and minimization measures for special-status bat species, potential significant impacts resulting from ground- and vegetation-disturbing activities associated with Project construction include habitat loss, inadvertent entrapment, roost abandonment, reduced reproductive success, reduction in health and vigor of young, and direct mortality of individuals.<br>Evidence impact is potentially significant: Pallid bat and other bats are known to roost under bridges (Lewis 1994 and Gruver 2006). Project activities on or around bridges have the potential to affect habitat upon which special-status bat species depend on for | This comment addresses potential impacts related to special-status bat species and provides recommendations to enhance the mitigation measures included in Section 4.4, Biological Resources, of the Draft PEIR.<br>Mitigation Measures BIO-1.1 and BIO-1.2 include specifications for determining the potential site-specific environmental impacts to special species, including special-status bat species. Mitigation Measure BIO-1.1 states that habitat for special-species shall be avoided where possible, but when that is not possible, avoidance and minimization efforts shall be incorporated into project plans to lessen potential environmental impacts. Mitigation Measure BIO-1.2 requires that if direct or direct or incidental take of a listed species occurs, consultation with the resources agencies and/or additional permitting may be required. Agency consultation through the CDFW |

## Table 3.A: Comments and Responses Matrix

| Letter/ Comment Number | Comment | Response |
|---|---|---|
| | successful breeding, and the potential to impact individuals and local populations.<br>Recommended Potentially Feasible Mitigation Measure(s)<br>CDFW recommends editing the PEIR to include the following measures and that these be made conditions of approval for the Project.<br>Recommended Mitigation Measure 26: Habitat Assessment<br>CDFW recommends that a qualified biologist conduct a habitat assessment well in advance of Project implementation to determine if an individual Project site or its immediate vicinity contains suitable habitat for special-status bat species.<br>Recommended Mitigation Measure 27: Focused Surveys<br>If suitable habitat is present, CDFW recommends assessing presence/absence of special-status bats by conducting protocol-level surveys during the appropriate seasonal period of bat activity.<br>Recommended Mitigation Measure 28: Consultation<br>Detection of special-status bat species warrants consultation with CDFW prior to any activity that may disturb bats. CDFW recommends submitting a Bat Eviction Plan to CDFW for written approval prior to project implementation, and that the Eviction Plan include details for excluding bats from the roost site, and a monitoring plan to ensure that all bats have exited the roost prior to the start of activity and will be unable to re-enter the roost until activity is completed. CDFW also recommends that Project or bat eviction activities be timed to avoid lactation and young-rearing. | 2081 and USFWS Section 7 or Section 10 permitting processes shall take place prior to any action that may result in the direct or incidental take of a listed species. Specific mitigation measures for direct or incidental impacts to a listed species will be determined on a case-by-case basis through agency consultation during the review process for discretionary projects.<br>Although these mitigation measures do not specify the recommendations identified in this comment, the mitigation measure requirements for avoidance if possible and continued coordination with resource agencies ensure that potential impacts to special-status bat species from future discretionary projects are addressed. As discussed and shown above in response to Comment A1-5, Mitigation Measure BIO-1.1 through Mitigation Measure BIO-1.4 have been amended to identify the need for agency consultation and application of applicable protocols at the time of project approval. |
| A1-13 | COMMENT 9: Western spadefoot<br>Issue: Western spadefoot inhabit grassland habitats, breed in seasonal wetlands, and seek refuge in upland habitat where they occupy burrows outside of the breeding season (Thomson et al. 2016). Review of aerial imagery indicates that the Project area contains these requisite habitat elements.<br>Specific impact: Western Spadefoot are known to occur in the area (CDFW 2020). Without appropriate avoidance and minimization measures for western spadefoot, potentially significant impacts associated with ground disturbance include; collapse of small mammal burrows, inadvertent entrapment, loss of upland refugia, water quality impacts to breeding sites, reduced reproductive success, reduction in health and vigor of eggs and/or young, and direct mortality of individuals. | This comment addresses potential impacts related to Western spadefoot and provides recommendations to enhance the mitigation measures included in Section 4.4, Biological Resources, of the Draft PEIR.<br>Mitigation Measures BIO-1.1 and BIO-1.2 include specifications for determining the potential site-specific environmental impacts to special species, including western spadefoot. Mitigation Measure BIO-1.1 states that habitat for special-species shall be avoided where possible, but when that is not possible, avoidance and minimization efforts shall be incorporated into project plans to lessen potential environmental impacts. Mitigation Measure BIO-1.2 requires that if direct or direct or incidental take of a listed species occurs, |

## Table 3.A: Comments and Responses Matrix

| Letter/ Comment Number | Comment | Response |
|---|---|---|
| | Evidence impact is potentially significant: Habitat loss and fragmentation resulting from agricultural and urban development is the primary threat to western spadefoot (Thomson et al. 2016). The Project area is within the range of western spadefoot, contains suitable upland habitat (i.e., grasslands interspersed with burrows) and breeding habitat (i.e., vernal pools and swales). As a result, ground-disturbing activities associated with development of the Project site have the potential to significantly impact local populations of this species.<br>Recommended Potentially Feasible Mitigation Measure(s)<br>To evaluate potential impacts to western spadefoot associated with the Project, CDFW recommends conducting the following evaluation of the Project area, incorporating the following mitigation measures into the PEIR prepared for this Project, and that these measures be made conditions of approval for the Project.<br>Recommended Mitigation Measure 29: Western Spadefoot Surveys<br>CDFW recommends that a qualified biologist conduct focused surveys for western spadefoot and their requisite habitat features at individual Project sites to evaluate potential impacts resulting from ground- and vegetation-disturbance.<br>Recommended Mitigation Measure 30: Western Spadefoot Avoidance<br>If suitable habitat occurs at an individual Project site, avoidance of western spadefoot whenever possible is encouraged via delineation and observance of a 50-foot no-disturbance buffer around burrows. | consultation with the resources agencies and/or additional permitting may be required. Agency consultation through the CDFW 2081 and USFWS Section 7 or Section 10 permitting processes shall take place prior to any action that may result in the direct or incidental take of a listed species. Specific mitigation measures for direct or incidental impacts to a listed species will be determined on a case-by-case basis through agency consultation during the review process for discretionary projects during the review process for discretionary projects.<br>Although these mitigation measures do not specify the recommendations identified in this comment, the mitigation measure requirements for avoidance if possible and continued coordination with resource agencies ensure that potential impacts to WPT from future discretionary projects are addressed. As discussed and shown above in response to Comment A1-5, Mitigation Measure BIO-1.1 through Mitigation Measure BIO-1.4 have been amended to identify the need for agency consultation and application of applicable protocols at the time of project approval. |
| A1-14 | COMMENT 10: Western pond turtle (WPT)<br>Issue: WPT are known to occur in the area of the Project site (CDFW 2020). WPT are known to nest in the spring or early summer within 100 meters of a water body, although nest sites as far away as 500 meter have also been reported (Thomson et al. 2016).<br>Specific impact: Without appropriate avoidance and minimization measures for WPT, potentially significant impacts associated with Project activities could include nest reduction, inadvertent entrapment, reduced reproductive success, reduction in health or vigor of eggs and/or young, and direct mortality.<br>Evidence impact is potentially significant: The Project site is in close proximity of known WPT habitat. Additionally, noise, vegetation removal, movement of workers, and ground disturbance as a result of Project activities have the potential to significantly impact WPT populations. | This comment addresses potential impacts related to Western pond turtle (WPT) and provides recommendations to enhance the mitigation measures included in Section 4.4, Biological Resources, of the Draft PEIR.<br>Mitigation Measures BIO-1.1 and BIO-1.2 include specifications for determining the potential site-specific environmental impacts to special species, including WPT. Mitigation Measure BIO-1.1 states that habitat for special-species shall be avoided where possible, but when that is not possible, avoidance and minimization efforts shall be incorporated into project plans to lessen potential environmental impacts. Mitigation Measure BIO-1.2 requires that if direct or direct or incidental take of a listed species occurs, consultation with the |

## Table 3.A: Comments and Responses Matrix

| Letter/ Comment Number | Comment | Response |
|---|---|---|
| | Recommended Potentially Feasible Mitigation Measure(s)<br>To evaluate potential impacts to WPT, CDFW recommends conducting the following evaluation of the Project site, editing the PEIR to include the following measures specific to WPT, and that these measures be made conditions of approval for the Project.<br>Recommended Mitigation Measure 31: WPT Surveys<br>CDFW recommends a qualified biologist determine if suitable habitat for WPT occurs at an individual Project site. If suitable habitat is determined to occur on an individual Project site, CDFW recommends that a qualified biologist conduct focused surveys for WPT 10 days prior to Project implementation. In addition, CDFW recommends that focused surveys for nests occur during the egg-laying season (March through August) and that any nests discovered remain undisturbed until the eggs have hatched.<br>Recommended Mitigation Measure 32: WPT Relocation<br>CDFW recommends that if any WPT are discovered at the site immediately prior to or during Project activities, they be allowed to move out of the area on their own. | resources agencies and/or additional permitting may be required. Agency consultation through the CDFW 2081 and USFWS Section 7 or Section 10 permitting processes shall take place prior to any action that may result in the direct or incidental take of a listed species. Specific mitigation measures for direct or incidental impacts to a listed species will be determined on a case-by-case basis through agency consultation during the review process for discretionary projects.<br>Although these mitigation measures do not specify the recommendations identified in this comment, the mitigation measure requirements for avoidance if possible and continued coordination with resource agencies ensure that potential impacts to American badgers from future discretionary projects are addressed. As discussed and shown above in response to Comment A1-5, Mitigation Measure BIO-1.1 through Mitigation Measure BIO-1.4 have been amended to identify the need for agency consultation and application of applicable protocols at the time of project approval. |
| A1-15 | COMMENT 11: American Badger<br>Issue: American badger are known to occur on the Project site (CDFW 2020). Badgers occupy sparsely vegetated land cover with dry, friable soils to excavate dens, which they use for cover, and that support fossorial rodent prey populations (i.e., ground squirrels, pocket gophers, etc.) (Zeiner et. Al 1990). The Project area supports these requisite habitat features. Therefore, the Project has the potential to impact American badger.<br>Specific impact: Without appropriate avoidance and minimization measures for American badger, potentially significant impacts associated with ground disturbance include direct mortality or natal den abandonment, which may result in reduced health or vigor of young.<br>Evidence impact is potentially significant: Habitat loss is a primary threat to American badger (Gittleman et al. 2001). The Project has the expectation to promote the growth of the City of Fresno, resulting in a high degree of land conversion and potential habitat fragmentation. As a result, ground-disturbing activities have the potential to significantly impact local populations of American badger.<br>Recommended Potentially Feasible Mitigation Measure(s) | This comment addresses potential impacts related to American badgers and provides recommendations to enhance the mitigation measures included in Section 4.4, Biological Resources, of the Draft PEIR.<br>Mitigation Measures BIO-1.1 and BIO-1.2 include specifications for determining the potential site-specific environmental impacts to special species, including American badgers. Mitigation Measure BIO-1.1 states that habitat for special-species shall be avoided where possible, but when that is not possible, avoidance and minimization efforts shall be incorporated into project plans to lessen potential environmental impacts. Mitigation Measure BIO-1.2 requires that if direct or direct or incidental take of a listed species occurs, consultation with the resources agencies and/or additional permitting may be required. Agency consultation through the CDFW 2081 and USFWS Section 7 or Section 10 permitting processes shall take place prior to any action that may result in the direct or incidental take of a listed species. Specific mitigation measures for |

## Table 3.A: Comments and Responses Matrix

| Letter/ Comment Number | Comment | Response |
|---|---|---|
| | To evaluate potential impacts to American badger associated with the Project, CDFW recommends conducting the following evaluation of Project sites, incorporating the following mitigation measures into the PEIR prepared for this Project, and that these measures be made conditions of approval for the Project.<br>Recommended Mitigation Measure 33: American Badger Surveys<br>If suitable habitat is present, CDFW recommends that a qualified biologist conduct focused surveys for American badger and their requisite habitat features (dens) to evaluate potential impacts resulting from ground- and vegetation-disturbance.<br>Recommended Mitigation Measure 34: American Badger Avoidance<br>If suitable habitat is present, avoidance whenever possible is encouraged via delineation and observation of a 50-foot no-disturbance buffer around dens until it is determined through non-invasive means that individuals occupying the den have dispersed. | direct or incidental impacts to a listed species will be determined on a case-by-case basis through agency consultation during the review process for discretionary projects.<br>Although these mitigation measures do not specify the recommendations identified in this comment, the mitigation measure requirements for avoidance if possible and continued coordination with resource agencies ensure that potential impacts to American badgers from future discretionary projects are addressed. As discussed and shown above in response to Comment A1-5, Mitigation Measure BIO-1.1 through Mitigation Measure BIO-1.4 have been amended to identify the need for agency consultation and application of applicable protocols at the time of project approval. |
| A1-16 | COMMENT 12: Spring-Run Chinook Salmon<br>Issue: The City of Fresno's sphere of influence's northern border encompasses a section of the San Joaquin River, which is known to support Chinook Salmon (*Oncorhynchus tshawytscha*), including the species of special concern fall-/late fall-run, and the nonessential experimental population of Central Valley spring-run.<br>Specific impact: Without appropriate avoidance and minimization measures potential impacts to chinook salmon include, disrupted spawning behavior, reduced reproductive success, and inability to reproduce.<br>Evidence impact would be significant: The Project area contains a part of the San Joaquin River; ground-disturbing activities or in-water work have the potential to impact salmon. Spring-run Chinook salmon are believed to have been the more abundant run and once spawned as high in the watershed as Mammoth Pool, the San Joaquin River represents the southernmost extent of the spring-run Chinook salmon geographic range and was once the largest such population in California (SJRRP 2018).<br>Recommended Potentially Feasible Mitigation Measure(s) To evaluate potential impacts to chinook salmon associated with the Project, CDFW recommends conducting the following evaluation of Project sites, incorporating the following mitigation measures into the PEIR prepared for this Project, and that these measures be made conditions of approval for the Project.<br>Recommended Mitigation Measure 35: Chinook Salmon Avoidance | This comment addresses potential impacts related to spring-run Chinook Salmon and provides recommendations to enhance the mitigation measures included in Section 4.4, Biological Resources, of the Draft PEIR.<br>Mitigation Measures BIO-1.1 and BIO-1.2 include specifications for determining the potential site-specific environmental impacts to special species, including Chinook Salmon. Mitigation Measure BIO-1.1 states that habitat for special-species shall be avoided where possible, but when that is not possible, avoidance and minimization efforts shall be incorporated into project plans to lessen potential environmental impacts. Mitigation Measure BIO-1.2 requires that if direct or direct or incidental take of a listed species occurs, consultation with the resources agencies and/or additional permitting may be required. Agency consultation through the CDFW 2081 and USFWS Section 7 or Section 10 permitting processes shall take place prior to any action that may result in the direct or incidental take of a listed species. Specific mitigation measures for direct or incidental impacts to a listed species will be determined on a case-by-case basis through agency consultation during the review process for discretionary projects.<br>Although these mitigation measures do not specify the recommenda- |

## Table 3.A: Comments and Responses Matrix

| Letter/ Comment Number | Comment | Response |
|---|---|---|
| | CDFW recommends Project activities avoid work in water and floodplains whenever possible, conduct Project activities during less critical times of the year (late June through August), and avoid spawning riffles or holding pools.<br>Recommended Mitigation Measure 36: Tree Removal Avoidance<br>If Project activities will occur in the riparian environment, CDFW recommend avoidance of tree removal whenever possible. If trees removal is not feasible, CDFW recommends preparation of a revegetation plan that incorporates native tree plantings within the San Joaquin River Restoration Area to replace removed trees.<br>Recommended Mitigation Measure 37: Habitat Mitigation<br>If Project activities will occur in the Floodplain, CDFW advises consultation with us to determine how to minimize and mitigate impacts to juvenile salmon utilization. | tions identified in this comment, the mitigation measure requirements for avoidance if possible and continued coordination with resource agencies ensure that potential impacts to Chinook Salmon from future discretionary projects are addressed. As discussed and shown above in response to Comment A1-5, Mitigation Measure BIO-1.1 through Mitigation Measure BIO-1.4 have been amended to identify the need for agency consultation and application of applicable protocols at the time of project approval. |
| A1-17 | COMMENT 13: Special Status Plant species<br>Issue: Plants listed pursuant to federal Endangered Species Act, CESA, and the Native Plant Protection Act, as well as other special-status plants such California Rare Plant Rank (CRPR) plant species have been documented in and around the Project area (CDFW 2020).<br>Specific impact: Without appropriate avoidance and minimization measures potential impacts to special-status plant species include inability to reproduce and direct mortality. Unauthorized take of species listed as threatened, endangered, or rare pursuant to CESA or the Native Plant Protection Act is a violation of Fish and Game Code.<br>Evidence impact would be significant: Special-status plant species plant species above are threatened with habitat loss and habitat fragmentation resulting from development, vehicle and foot traffic, and introduction of non-native plant species (CNPS 2020), all of which may be unintended impacts of the Project. Therefore, impacts of the Project have the potential to significantly impact populations of the species mentioned above.<br>Recommended Potentially Feasible Mitigation Measure(s)<br>To evaluate potential impacts to special-status plants associated with the Project, CDFW recommends conducting the following evaluation of the Project area and including the following mitigation measures as conditions of Project approval in the Project's CEQA document.<br>Recommended Mitigation Measure 38: Special-Status Plant Habitat Assessment | This comment addresses potential impacts related to special status plant species and provides recommendations to enhance the mitigation measures included in Section 4.4, Biological Resources, of the Draft PEIR.<br>Mitigation Measures BIO-1.1 and BIO-1.2 include specifications for determining the potential site-specific environmental impacts to special species, including special status plant species. Mitigation Measure BIO-1.1 states that habitat for special-species shall be avoided where possible, but when that is not possible, avoidance and minimization efforts shall be incorporated into project plans to lessen potential environmental impacts. Mitigation Measure BIO-1.2 requires that if direct or direct or incidental take of a listed species occurs, consultation with the resources agencies and/or additional permitting may be required. Agency consultation through the CDFW 2081 and USFWS Section 7 or Section 10 permitting processes shall take place prior to any action that may result in the direct or incidental take of a listed species. Specific mitigation measures for direct or incidental impacts to a listed species will be determined on a case-by-case basis through agency consultation during the review process for discretionary projects.<br>Although these mitigation measures do not specify the recommenda-tions identified in this comment, the mitigation measure requirements |

## Table 3.A: Comments and Responses Matrix

| Letter/ Comment Number | Comment | Response |
|---|---|---|
| | CDFW recommends that a qualified botanist conduct a habitat assessment of individual Project sites well in advance of Project implementation, to determine if the Project area or its vicinity contains suitable habitat for special-status plant species.<br>Recommended Mitigation Measure 39: Focused Surveys<br>If suitable habitat is present, CDFW recommends that individual Project sites be surveyed for special-status plants by a qualified botanist following the "Protocols for Surveying and Evaluating Impacts to Special Status Native Plant Populations and Sensitive Natural Communities" (CDFW 2018). This protocol, which is intended to maximize detectability, includes identification of reference populations to facilitate the likelihood of field investigations occurring during the appropriate floristic period. In the absence of protocol-level surveys being performed, additional surveys may be necessary.<br>Recommended Mitigation Measure 40: Special-Status Plant Avoidance<br>CDFW recommends special-status plant species be avoided whenever possible by delineation and observing a no-disturbance buffer of at least 50 feet from the outer edge of the plant population(s) or specific habitat type(s) required by special-status plant species. If buffers cannot be maintained, then consultation with CDFW is warranted to determine appropriate minimization and mitigation measures for impacts to special-status plant species.<br>Recommended Mitigation Measure 41: Special-Status Plant Take Authorization<br>If a State-listed plant species is identified during botanical surveys, consultation with CDFW is warranted to determine if the Project can avoid take. However, if take cannot be avoided, take authorization would need to occur through issuance of an ITP by CDFW to comply with CESA and/or Fish and Game Code section 1900 and California Code of Regulations, title 14, section 786.9, subdivision (b). | for avoidance if possible and continued coordination with resource agencies ensure that potential impacts to special status plant species from future discretionary projects are addressed. As discussed and shown above in response to Comment A1-5, Mitigation Measure BIO-1.1 through Mitigation Measure BIO-1.4 have been amended to identify the need for agency consultation and application of applicable protocols at the time of project approval. |
| A1-18 | II. Editorial Comments and/or Suggestions<br>Lake and Streambed Alteration: The Project contains features that may result in Project activities at individual Project sites being subject to CDFW's regulatory authority pursuant Fish and Game Code section 1600 et seq. Fish and Game Code section 1602 requires an entity to notify CDFW prior to commencing any activity that may (a) substantially divert or obstruct the natural flow of any river, stream, or lake; (b) substantially change or use any material from the bed, bank, or channel of any river, stream, or lake; or (c) deposit debris, waste or other materials that could pass into any | This comment provides recommendations regarding alterations of lakes or streambeds, subject to Fish and Game Code section 1600 et seq. This comment acknowledges that project-level analysis of potential project sites would be required. This comment does not address the adequacy of the analysis included in the Draft PEIR and does not request the incorporation of additional information relevant to environmental issues. No further response is required, pursuant to Section 15088(a) of the State CEQA Guidelines. |

## Table 3.A: Comments and Responses Matrix

| Letter/ Comment Number | Comment | Response |
|---|---|---|
| | river, stream, or lake. "Any river, stream, or lake" includes those that are ephemeral or intermittent, such as the unnamed stream within the Project site, as well as those that are perennial in nature.<br>For additional information on notification requirements, please contact our staff in the Lake and Streambed Alteration Program at (559) 243-4593. It is important to note, CDFW is required to comply with CEQA, as a Responsible Agency, when issuing a Lake or Streambed Alteration Agreement (LSAA). If inadequate, or no environmental review, has occurred, for the Project activities that are subject to notification under Fish and Game Code section 1602, CDFW will not be able to issue the Final LSAA until CEQA analysis for the project is complete. This may lead to considerable Project delays. | |
| A1-19 | Federally Listed Species: CDFW recommends consulting with the USFWS on potential impacts to federally listed species including, but not limited to, CTS and SJKF. Take under FESA is more broadly defined than CESA; take under FESA also includes significant habitat modification or degradation that could result in death or injury to a listed species by interfering with essential behavioral patterns such as breeding, foraging, or nesting. Consultation with the USFWS in order to comply with FESA is advised well in advance of any ground-disturbing activities. | This comment requests consulting with USFWS on federally listed species within the Planning Area. This comment is a recommendation and would be implemented at the project-level as discretionary development under the approved General Plan occurs. This comment does not address the adequacy of the analysis included in the Draft PEIR and does not request the incorporation of additional information relevant to environmental issues. No further response is required, pursuant to Section 15088(a) of the State CEQA Guidelines. |
| A1-20 | ENVIRONMENTAL DATA<br>CEQA requires that information developed in environmental impact reports and negative declarations be incorporated into a database which may be used to make subsequent or supplemental environmental determinations (Pub. Resources Code, § 21003, subd. (e)). Accordingly, please report any special-status species and natural communities detected during Project surveys to the California Natural Diversity Database (CNDDB). The CNDDB field survey form can be found at the following link: https://www.wildlife.ca.gov/Data/CNDDB/Submitting-Data. The completed form can be mailed electronically to CNDDB at the following email address: CNDDB@wildlife.ca.gov. The types of information reported to CNDDB can be found at the following link: https://www.wildlife.ca.gov/Data/CNDDB/Plants-and-Animals. | This comment provides general information regarding future reporting of special-status species and natural communities located on project sites within the Planning Area. This comment does not address the adequacy of the analysis included in the Draft PEIR and does not request the incorporation of additional information relevant to environmental issues. No further response is required, pursuant to Section 15088(a) of the State CEQA Guideline. |
| A1-21 | FILING FEES<br>If it is determined that the Project has the potential to impact biological resources, an assessment of filing fees will be necessary. Fees are payable upon filing of the Notice of Determination by the Lead Agency and serve to help defray the cost of environmental | This comment provides general information regarding filing fees that may be applicable to future projects that would occur under approved General Plan. This comment does not address the adequacy of the analysis included in the Draft PEIR and does not |

## Table 3.A: Comments and Responses Matrix

| Letter/ Comment Number | Comment | Response |
|---|---|---|
| | review by CDFW. Payment of the fee is required in order for the underlying project approval to be operative, vested, and final (Cal. Code Regs, tit. 14, § 753.5; Fish & G. Code, § 711.4; Pub. Resources Code, § 21089).<br>CDFW appreciates the opportunity to comment on the Project to assist the City of Fresno in identifying and mitigating the Project's impacts on biological resources.<br>More information on survey and monitoring protocols for sensitive species can be found at CDFW's website (https://www.wildlife.ca.gov/Conservation/Survey-Protocols). If you have any questions, please contact Jaime Marquez, Environmental Scientist, at the address provided on this letterhead, by telephone at (559) 243-4014, extension 291, or by electronic mail at Jaime.Marquez@wildlife.ca.gov. | request the incorporation of additional information relevant to environmental issues. No further response is required, pursuant to Section 15088(a) of the State CEQA Guidelines. |
| **A2** | **California Department of Transportation, District 6 (May 5, 2020)** | |
| A2-1 | Caltrans has completed its review of the Fresno General Plan Public Review Draft Program Environmental Impact Report PEIR dated March 2020 and prepared by LSA for the City of Fresno (City). In 2014, Caltrans provided comments to the now adopted City's General Plan and the accompanied Master Environmental Impact report (MEIR). In order to be in conformance with State law and consistent with recent legislative changes, the City is updating the MEIR and converting it to a Program EIR (PEIR).<br>The City's General Plan proposes a balanced transportation system that serves transit, bikes and pedestrians as well as automobiles. This multi-modal system should support a more compact development pattern, which in turn will support other goals, including preserving farmland and making neighborhoods more walkable. Caltrans applauds the City in their efforts to reduce the reliance on the automobile. However, with the projected population growth, the future demand on State facilities and interchanges will exacerbate current conditions. Therefore, the City should continue to work with its stakeholders to maintain its public streets and roads and work with Caltrans to identify funding strategies for the State Highway System in absence of inclusive program.<br>Caltrans recognizes that we live in an area where our population is very automobile dependent. As the population grows, we do not have the capability to move people solely on the State Highway System thus creating the need for an integrated transportation system with our various local partners, such as the City, that offers multi-modal options. This understanding has created a cultural change within Caltrans. For example, we have recently endorsed the National Association of City Transportation Officials (NACTO) Urban Street Design Guide and the Urban Bikeway Design Guide. | This comment provides an introduction to the comment letter and briefly summarizes the commenter's understanding of the proposed project. This comment does not address the adequacy or completeness of the Draft PEIR; does not raise environmental issues; and does not request the incorporation of additional information relevant to environmental issues. Such comments do not require a response, pursuant to Section 15088(a) of the State CEQA Guidelines. No further response is necessary. |

## Table 3.A: Comments and Responses Matrix

| Letter/ Comment Number | Comment | Response |
|---|---|---|
| | Caltrans also developed the Main Street, California and the 2040 California Transportation Plan.<br>Caltrans has the following comments: | |
| A2-2 | 1. On Page 3-1, Section 3.1, under Project Location, the first paragraph, second sentence should include a statement that describes State Route (SR) 99 as a designated High Emphasis Focus Route on the Interregional Transportation Strategic Plan. | In response to this comment, and shown in Chapter 4.0 of this Response to Comments Document, text on page 3-1 has been revised as follows:<br>The City of Fresno is located in Fresno County in the central San Joaquin Valley. The city is located approximately 200 miles north of Los Angeles, and 170 miles south of Sacramento. The city is located on the State Route (SR) 99 corridor. SR 99 is designated in Caltrans' Interregional Transportation Strategic Plan as a High Emphasis Focus Route. A High Emphasis Focus Route is a high-volume, primary artery in which lower-volume and facility-standard State highway routes connect for purposes of longer interregional trips and access to statewide gateways. Figure 3-1, Regional Location and Local Vicinity Map, shows the city of Fresno in its regional context and local vicinity. To the north of Fresno is Madera County, to the northeast and adjacent to Fresno, is the city of Clovis. Unincorporated land is located to the east, south, and west of Fresno.<br>Text revisions indicated above provide clarification and do not constitute significant new information that would require recirculation of the Draft PEIR. |
| A2-3 | 2. As shown in Figure 3-5 – Growth Areas and Figure 3-6 – Development Areas, focuses growth west and southwest of SR 99. SR 99 is an interregional facility that is already under tremendous strain in the existing condition. Directing growth west and southwest of SR 99 may significantly increase traffic to SR 99 due to the addition of local commuter traffic that would occur on this interregional goods movement corridor, therefore the City should work with Caltrans on Intelligent Transportation Systems to minimize impacts.<br>a. Development west of SR 99 may also impact SR 180. The General Plan proposes light industrial development in the path of the future freeway extension of SR 180. The City should work with Caltrans to preserve the right-of-way for the future SR 180 corridor as | The vision of the Land Use Element considers growth to the west and southwest to achieve the goals, policies and objectives of the approved General Plan. This growth will also be correlated with future capital projects and mobility strategies. The City looks forward to working with Caltrans on Intelligent Transportation Systems (ITS) improvements and other strategies, including right-of-way reservation which would be consistent with the City's vision to enhance mobility and complement interregional goods movement. |

## Table 3.A: Comments and Responses Matrix

| Letter/ Comment Number | Comment | Response |
|---|---|---|
| | well as the interchanges. This sort of planning will drive the need for the SR 180 west extension but currently there is no funding in place. | |
| A2-4 | 3. On Page 3-8, Policy Number MT-2-m, under Use VMT analysis for CEQA, indicated that changes to the California Environmental Quality Act (CEQA) require the development of a new approach for analyzing transportation impacts under CEQA. The new approach will eliminate vehicle delay and level-of-service for CEQA impacts for many parts of California. However, it should be noted that safety will remain the priority for all State facilities. As previously commented, a true analysis of a freeway segment is much more complex than simply equating the number of lanes to a level-of-service. It would require a weaving analysis, merging analysis, and diverging analysis. Analysis of the freeway interchange would require intersection analysis, queuing analysis, and stopping distance analysis. Queuing on ramps can result in severe safety deficiency due to reduced stopping distances and traffic backed up onto the mainline through lanes. | One of the primary goals of the Circulation Element of the approved General Plan is the maintenance of a safe mobility system. As Caltrans programs, designs and develops new corridor projects, the City will support the analysis of system performance by Caltrans. |
| A2-5 | 4. On Page 3-9, middle of the third paragraph, indicates that purposefully designed congestion incentivizes the use of transit or other modes of transportation that more efficiently move people and is better for air quality. However, as previously commented, the data would seem to suggest that even with significant increases in pedestrian, bike, and transit use, the future demand on the freeways and interchanges would nevertheless continue to increase due to natural increases in population. It is thus unlikely that the number of trips that would convert from individual motor vehicles to these other modes of transportation could be offset by the projected increase of population. Additionally, increasing congestion would negatively impact air quality by increasing the travel time a vehicle takes to complete the same trip distance. The increased time would result in an increase in the amount of air pollutants that the vehicle discharges. | The Draft PEIR discloses the changes in vehicle miles traveled (VMT), greenhouse gases (GHG) and other air pollutants directly and cumulatively attributable to implementation of the approved General Plan. These increases did not result in significant impacts, as concluded in Section 4.3, Air Quality, and Section 4.8, Greenhouse Gas Emissions, of the Draft PEIR. The City has enumerated goals, policies and objectives to incentive mode shift away from single occupant vehicles. Based on the forecasting provided, the City anticipates some level of effectiveness in moving some future citizens from automobiles to active transportation and transit, and thus reducing emissions related to vehicle use. |
| A2-6 | 5. On Page 3-18, under Section 3.2.7 Infill Areas and on Page 4.3-28, Objective UF-12, the City should consider a Park and Ride in this area particularly near the SR 180/Clovis Avenue interchange. | This comment is noted. A Park and Ride near the SR 180/Clovis Avenue interchange was not seen as essential to offset significant impacts at this time. The City will continue to work with the Department to identify feasible mobility strategies for future growth in the City. |
| A2-7 | 6. On Page 4.3-37, Policy MT-1-o: LOS Deviations Outside of Activity Centers and Areas Designated for Mixed-Use, states that the project would not substantially increase hazards due to a design feature or incompatible uses. Acceptance of vehicle LOS E or F | It is acknowledged Caltrans has the ultimate discretion to determine methodologies and metrics for the analysis of facilities under its jurisdiction. As discrete land development and capital projects are |

## Table 3.A: Comments and Responses Matrix

| Letter/ Comment Number | Comment | Response |
|---|---|---|
| | conditions outside of identified multi-modal districts only if provisions commensurate with the level of impact and approved by the City Traffic engineer are made to sufficiently improve the overall transportation system and promote non-vehicular transportation as part of a development project. However, as previously commented, Caltrans will determine measures and standards that facilities under its jurisdiction shall employ. Additionally, Caltrans would be concerned with the possibility of congested ramp intersections causing traffic to back up onto the freeway mainlines. This could result in the creation of potential situations where vehicles exiting the freeway mainline at a high speed do not have adequate stopping distance on the ramp due to backup. Also, if the ramp queue backs up all the way to the freeway mainline, there could be additional concern due to the expectation of continuously moving traffic on the freeway mainline lanes. | proposed, the City anticipates Caltrans comments requesting these methodologies for their facilities, such as freeway ramps and interchanges. |
| A2-8 | 7. On Page 4.3-39, Policy MT-5-d: Pedestrian Safety, indicates Minimize vehicular and pedestrian conflicts on both major and non-roadways through use of traffic design and control measures that reduce congestion and increase safety. For the downtown area, the City should employ some type of mechanism or trigger for improvements. | Consistent with General Plan MT-5-d: Pedestrian Safety, the City will use its discretion for improvements along municipal facilities to minimize vehicular pedestrian conflicts in the downtown. |
| A2-9 | 8. On Page 4.11-14, LU-7-a, Incentives for a Diversity of Industries, Increased Food Processing and Manufacturing, and related Employment Opportunities in Fresno, in the commentary section, both SR 41 and SR 99 are currently impacted at the North/Cedar Avenue interchanges. The City should continue to collaborate with Caltrans to identify funding sources to allow for interchange improvements to accommodate the future growth. | The City looks forward to continuing a productive collaboration with Caltrans to identify funding sources to allow for interchange improvements to accommodate the future growth on SR 41 and SR 99. It should also be noted that the City recently partnered with Caltrans, Fresno Council of Governments (COG), and the Fresno County Transportation Authority (FCTA) to apply for three grants to fund improvements at the interchange of SR 99, South Cedar Avenue and East North Avenue. The collaboration would include BUILD, INFRA and LPP grants to accommodate future growth. |
| A2-10 | 9. On Page 4.16-2, under Section 4.16.3.1 Roadway Network, Caltrans prepares and periodically updates the Transportation Concept Report (TCR). The TCR is a long-range system-planning document that establishes a planning concept for a state highway corridor through the future year. The TCR provides the route, traffic data, and operating characteristics for Caltrans District 6 State highway corridors and should be referred to when development occurs near the State facility. | The comment offers information related to the TCR and requires no response, pursuant to Section 15088(a) of the State CEQA Guidelines. |

## Table 3.A: Comments and Responses Matrix

| Letter/ Comment Number | Comment | Response |
|---|---|---|
| A2-11 | 10. On Page 4.16-4, it is noted in the first paragraph that the analysis of traffic operations was conducted on roadway segments representative of the City's overall transportation network, and that the roadway segment analysis is based on traffic counts taken at a single location or link that is intended to be representative of the entire segment. However, while this approach of examining segments and relying on data collected at spot locations to represent that entire segment is satisfactory for very broad planning applications, it is too simplistic for determining the operation of specific elements of a freeway segment or freeway interchange. Analysis of the freeway interchange would require intersection, queuing, and stopping distance analysis. | The transportation analysis of the approved General Plan is intended to identify the proper roadway circulation system to generally support the future growth anticipated by the Land Use Element on City streets. The level of detail required for detailed operational analyses of discrete elements of freeway interchanges is not available as specific development projects are not yet proposed; further such level of detail is beyond t scope of a General Plan and programmatic EIR. As individual discrete land development applications are submitted, that detailed level of analysis may be required, consistent with the then current CEQA Guidelines, Caltrans Transportation Impact Study Guide (TISG), Transportation Analysis Framework (TAF) and Transportation Analysis under CEQA (TAC), as applicable. |
| A2-12 | 11. On Page 4.16-19, Implementing Policy MT-1-c, directs the Director of Transportation to prepare and adopt official plan lines or other documentation needed to preserve or obtain right-of-way (ROW) for planned improvements to transportation corridors, roadways, and bike/pedestrian paths. However, there does not appear to be any similar implementing policy that would preserve right-of-way for possible future improvements to State facilities. Caltrans recognizes the importance of preserving ROW; we suggest incorporating similar policy regarding State facilities. This could be accomplished by including Caltrans' Transportation Concept Reports (TCRs) and other documentation as part of the City's policies. | The City has little if any discretion over property within the State right-of-way (ROW). The City will continue to collaborate with Caltrans to seek mutually beneficial projects and reserve rights of way the City believes it controls and would be in the best interest of General Plan implementation. |
| A2-13 | 12. On Page 4.16-19, Implementing Policy MT-4-g, the City should include the following language: Caltrans has indicated that California's transportation system cannot meet the State's needs with just highways and supports guidelines meant to improve Caltrans' design of bicycle facilities. The guidelines were developed by the American Association of State Highway Transportation Officials and the National Association of City Transportation Officials. These guidelines promote a network of Class 1 bicycle facilities that connect major origins and destinations linked with a network of Class 2 facilities on all possible streets. A Class 1 bicycle facility is situated on a separate right-of-way or with some sort of physical barrier placed on the street between the bicycle and motor vehicle, while a Class 2 facility shares the travel way with motor vehicles separated by striping. These standards should be considered as transportation system developments so as not to preclude future design options. | In response to this comment, and shown in Chapter 4.0 of this Response to Comments Document, Table 3-1 of the Project Description and text on page 4.16-19 has been revised as follows:<br>**Policy MT-4-g: Advocacy for Bike Accommodation.** Advocate for the accommodation of bike facilities in new or upgraded State Route interchanges and railroad construction projects, and construction of bicycle crossings of freeways and railroads.<br>Caltrans has indicated that California's transportation system cannot meet the State's needs with just highways and supports guidelines meant to improve Caltrans' design of bicycle facilities. The guidelines were developed by the American Association of |

## Table 3.A: Comments and Responses Matrix

| Letter/ Comment Number | Comment | Response |
|---|---|---|
| | | State Highway Transportation Officials and the National Association of City Transportation Officials. These guidelines promote a network of Class 1 bicycle facilities that connect major origins and destinations linked with a network of Class 2 facilities on all possible streets. A Class 1 bicycle facility is situated on a separate right-of-way or with some sort of physical barrier placed on the street between the bicycle and motor vehicle, while a Class 2 facility shares the travel way with motor vehicles separated by striping. These standards should be considered as transportation system developments so as not to preclude future design options.<br><br>Text revisions indicated above provide clarification and do not constitute significant new information that would require recirculation of the Draft PEIR. |
| A2-14 | 13. On Page 4.16-20, Implementing Policy MT-1-l, indicates that vehicle LOS F conditions would be acceptable during peak hours for segments and intersections within the Downtown Planning Area. However, as previously commented, those facilities under State jurisdiction would need to be analyzed using methods and assumptions approved by Caltrans. Also, Caltrans will determine measures and standards that facilities under its jurisdiction shall employ. | As individual discrete land development applications are submitted, detailed level of analysis would be required, consistent with the City's CEQA Guidelines and thresholds, and if within the State ROW, the Caltrans Transportation Impact Study Guide (TISG), Transportation Analysis Framework (TAF) and Transportation Analysis under CEQA (TAC), as applicable. |
| A2-15 | 14. On Page 4.16-23, it is indicated that Traffic Impact Zone I (TIZ-I) represents the Downtown Planning Area. A peak hour LOS standard of F or better would be maintained for all intersections and roadway segments. However, as previously commented, those facilities under State jurisdiction would need to be analyzed using methods and assumptions approved by Caltrans. Also, Caltrans will determine measures and standards that facilities under its jurisdiction shall employ. | Please see response to Comment A2-14. |
| A2-16 | 15. On Page 6-4, 6.3.2 Project Objectives, it is indicated that General Plan Objective No. 13 includes emphasizing the City as a role model for environmental quality. However, later in the document it is indicated that the City proposes to allow selected locations in the city to operate at unsatisfactory traffic levels-of-service. Allowing increasing traffic congestion would appear to act against General Plan Objective No. 13. Increasing congestion would negatively impact air quality by increasing the travel time a vehicle takes to complete the same trip distance. The increased time would result in an increase | Although the City's approved General Plan will continue to include policies MT-1-l, MT-1-o and MT-2-i that include Level of Service (LOS) metrics to evaluate intersection operations, should increased congestion occur, it would not be a significant environmental impact according to revised CEQA thresholds of significance. Should congestion occur in the future, it will facilitate mode shifts to transit and active transportation per the objectives of State Senate Bills SB |

## Table 3.A: Comments and Responses Matrix

| Letter/ Comment Number | Comment | Response |
|---|---|---|
| | in the amount of air pollutants that the vehicle discharges. | 375 and SB 743. The City has included numerous strategies, goals, policies and objectives to reduce air pollutants in the approved General Plan, and emissions related to vehicle use. |
| A2-17 | 16. On Page 6-4, 6.3.2 Project Objectives, it is indicated that General Plan Objective No. 14 includes providing a network of walking and biking trails to benefit the health of residents. Caltrans supports guidance meant to provide flexibility for bicycle facility design. The American Association of State Highway Transportation Officials and the National Association of City Transportation Officials publications help as a guide to Caltrans' philosophy and flexible approach toward designing multimodal transportation projects. These guides promote a network of Class I, Class II and Class III bicycle facilities that connect major origins and destinations. These guides should be considered in all transportation system developments to include flexibility in future design options. | The City has a system of bikeways with the Class I through IV designations. Where not yet constructed, they will be developed per the approved General Plan and individual Capital Improvement Plans. |
| A2-18 | We concur with the City in that in the "No Project" scenario, the approved General Plan would not be updated to reflect conformance with SB 743, and no updates to the Greenhouse Gas Reduction Plan would occur. Following recent approval of SB 743, assessing potential environmental impacts relative to VMT will be required after July 1, 2020. As result, Caltrans' 2002 Guide for the Preparation of Traffic Impact Studies is in the process of being updated to include VMT analysis and should be available by July 1, 2020. | This comment does not question the adequacy of the analysis included in the Draft PEIR and no further responses is required. |
| A2-19 | SB 375 formalized the connection between land use planning and transportation. Population growth is eminent. The General Plan is indicating that the "Vehicle Miles Traveled (VMT)" is projected to more than double (9,395,800 to 19,883,400 weekday) with full build-out. Furthermore, with the funding constraints in transportation that we are compelled to contend with, we are learning that we cannot necessarily afford to build our way out of congestion. While there is still opportunity to expand infrastructure in our region, we will also need to manage our transportation infrastructure more efficiently. This can only be done by working together, maximizing funding opportunities (i.e. all-inclusive Regional fee programs) to develop a well-integrated system that offers various alternative modes for our residents. | This comment does not question the adequacy of the analysis included in the Draft PEIR and no further responses is required. |

## Table 3.A: Comments and Responses Matrix

| Letter/ Comment Number | Comment | Response |
|---|---|---|
| **Local Agencies** | | |
| **B1** | **Fresno Council of Governments (April 24, 2020)** | |
| B1-1 | Thank you for notifying me on behalf of the Fresno County Airport Land Use Commission of the availability and extended comment period for the City of Fresno's Draft PEIR for the General Plan. After running a staff level review of the PEIR I have drafted the following acknowledgements with appreciation for the City's airport land use inclusionary language:<br>1. No changes to the current land use diagram (Figure 3-3 of the PEIR) are proposed as part of this project. (3.2.5)<br>2. It is noted that sections 4.9.4 and 4.9.4.3 include discussions regarding the ALUCP and references the Fresno Municipal Code recent amendment to give the ALUCP priority over all other land use plans and zoning requirements.<br>3. All subject City of Fresno General Plan amendments will be brought before the ALUC as a "Responsible and Trustee Agency" as listed in section 3-25 of the PEIR, for approved Findings of Consistency.<br>4. The Fresno airports are each listed under Airport Hazards, page 4.9.8 in the PEIR as well as a FAA regulations Part 77 discussion included on page 4.9-10, with the explanation that regulations for hazards to air navigation retain a direct regulatory role.<br>5. Further reference to the ALUCP under HAZ-5 on page 4.9-25 and hazardous use requirements are sufficient.<br>6. Objective NS-5 duly noted as it related to airport noise and safety, as well as several other references to the Fresno County ALUCP.<br>As staff support to a regional body whose intent is to protect and promote the safety and welfare of residents, businesses, and airport users near the public use airports and Naval Air Station Lemoore in Fresno county, while supporting the continued operation of these facilities, I encourage the City of Fresno to continue to seek Fresno County ALUC Findings of Consistency as directed in section 2.8 of the Fresno County Airport Land Use Compatibility Plan. | The comment letter provides comments on behalf of the Fresno County Airport Land Use Commission (ALUC) and acknowledges the City's use of airport land use inclusionary language. The comment letter identifies six topics of importance to the ALUC that are included in the Draft PEIR. These topics are not recommended to be modified, and the comment letter states that the ALUC encourages the City to continue to seek Fresno County ALUC Findings of Consistency as directed in section 2.8 of the Fresno County Airport Land Use Compatibility Plan. This comment does not address the adequacy or completeness of the Draft PEIR; does not raise environmental issues; and does not request the incorporation of additional information relevant to environmental issues. Such comments do not require a response, pursuant to Section 15088(a) of the State CEQA Guidelines. No further response is required. |
| **B2** | **Fresno Metropolitan Flood Control District (May 5, 2020)** | |
| B2-1 | The District has adopted drainage master plans for the City of Fresno metropolitan area. These plans are based on the then adopted General and Specific Plan land uses. For this proposed Program Environmental Impact Repo1t (PEIR), it is our understanding based on | This comment provides an introduction to the comment letter and briefly summarizes the commenter's understanding of the proposed project. This comment does not address the adequacy or |

## Table 3.A: Comments and Responses Matrix

| Letter/ Comment Number | Comment | Response |
|---|---|---|
| | the Notice of Availability there will be no changes in land use as part of this project or major street alignments. The District understands that this project is essentially a necessary update and conversion of the previously-certified 2014 Master Environmental Impact Report (MEIR) to a PEIR in order to be in conformance with State law and consistent with recent legislative changes. Additionally, the PEIR is updating technical analyses to reflect current baseline conditions of 2019.<br>The District has commented on the previously-certified 2014 MEIR and offers the following factual and editorial comments specific to the review of the proposed PEIR (the individual pages are included and the section or sentence has been highlighted for your reference): | completeness of the Draft PEIR; does not raise environmental issues; and does not request the incorporation of additional information relevant to environmental issues. Such comments do not require a response, pursuant to Section 15088(a) of the State CEQA Guidelines. No further response is necessary. |
| B2-2 | l. Page 1-33, Table 1-1: Executive Summary Matrix, Mitigation Measure HYD-3.2; Item 2 should be removed. | In response to this comment, and shown in Chapter 4.0 of this Response to Comments Document, Mitigation Measure HYD-3.2 has been revised as follows:<br>**Mitigation Measure HYD-3.2:** The City shall implement the following measures to reduce the impacts on the capacity of existing or planned SDFCMP retention basins:<br>Prior to approval of development projects, coordinate with FMFCD~~FCMFCD~~ to analyze the impacts to existing and planned retention basins to determine remedial measures required to reduce the impact on retention basin capacity to less than significant. Remedial measures would include:<br>1. Increase the size of the retention basin through the purchase of more land or deepening the basin or a combination for planned retention basins.<br>~~2. Increase the size of the emergency relief pump capacity required to pump excess runoff volume out of the basin and into adjacent canal that convey the stormwater to a disposal facility for existing retention basins.~~<br>2~~3~~. Require developments that increase runoff volume to install, operate, and maintain, Low Impact Development (LID) measures to reduce runoff volume to the runoff volume that will not exceed the capacity of the existing retention basins. |

## Table 3.A: Comments and Responses Matrix

| Letter/ Comment Number | Comment | Response |
|---|---|---|
| | | Text revisions indicated above provide a correction in response to the comment and do not constitute significant new information that would require recirculation of the Draft PEIR. |
| B2-3 | 2. Page 4.10-2, Stormwater Drainage Section; the Planning Area consists of over 158 should be replaced with 132. | In response to this comment, and shown in Chapter 4.0 of this Response to Comments Document, text on page 4.10-2 has been revised as follows:<br>**Stormwater Drainage.** Storm drainage facilities within the Fresno-Clovis Metropolitan area are planned, implemented, operated and maintained by the FMFCD. The storm drainage facilities are documented in the Storm Drainage and Flood Control Master Plan (SDFCMP), which is developed and updated by FMFCD. The master plan drainage system for the Planning Area consists of over 132~~158~~ individual drainage areas or urban watersheds. Drainage area boundaries are determined by geographic and topographic features and the economics of providing storm drainage service to the watershed. The storm drainage facilities within a drainage area consist of storm drain inlets, pipeline, retention basins, urban detention (water quality) basins, and stormwater pump stations. Surface grading improvements such as streets, curbs, gutters, and valley gutters are part of the City of Fresno infrastructure, but the general grading of these features is governed by the SDFCMP to provide a coherent implementation of drainage within the Planning Area. |
| B2-4 | 3. Page 4.10-3, Stormwater Drainage Section, second paragraph; should have a comma after the words parcels as they develop. | In response to this comment, and shown in Chapter 4.0 of this Response to Comments Document, text on page 4.10-3 has been revised as follows:<br>The Fresno-Clovis Metropolitan area consists of drainage areas that are completed, e.g., all of the master planned facilities are constructed and functional; or in the process of being completed, e.g. portions of the retention basins, pipelines, and inlets are constructed and portions are not. For the drainage areas that are in the planning stage, e.g., the drainage area is planned and documented, the retention basin land may have been purchased, |

## Table 3.A: Comments and Responses Matrix

| Letter/ Comment Number | Comment | Response |
|---|---|---|
| | | but no construction has occurred. Implementation of the SDFCMP occurs in response to development activity in newly developing areas and through Capital Improvement Project (CIP) planning in previously developed areas. Funding for storm drainage facilities occurs through the collection of drainage fees assessed on parcels as they develop, through grant funding from the State of California and the Federal Government, through low interest infrastructure improvement bonds, and in the past, through assessment districts. Drainage fees fund the majority of the construction of master plan facilities in newly developing areas. Grants, infrastructure loans, and assessment districts fund the majority of construction in previously developed drainage areas. |
| B2-5 | 4. Page 4.10-20, Hydrology and Water Quality Section, Long-Term Impacts:<br>The proposed PEIR does not adequately reflect baseline conditions since the certification of the 2014 MEIR, Page 4.10-20 of the PEIR discusses the long-term impacts of the project's impact to water quality. Urban storm water discharges are regulated by Section 402(p) of the federal Clean Water Act. The City of Fresno, FMFCD, the County of Fresno, the City of Clovis, and the California State University, Fresno are currently covered as Co-Permittees for Municipal Separate Storm Sewer System (MS4) discharges through National Pollutant Discharge Elimination System (NPDES) General Order No. RS-2016-0040 and NPDES Permit No. CAS0085324 (Storm Water Permit) effective May 17, 2018. The previous Storm Water Permit adopted on May 31, 2013 required the adoption of Stormwater Quality Management Program (SWQMP) that describes the Storm Water Permit implementation actions and Co-Permittee responsibilities. That SWQMP was approved by the Central Valley Regional Water Quality Control Board on April 17, 2015 as is effective until adoption of a new SWQMP, which is anticipated within the next two years.<br>The PEIR states on page 4.10-20 that: "This Phase I MS4 Permit requires that the City of Fresno and its Co-Permittees implement water quality and watershed protection measures for all development projects." Although correct, this statement does not adequately describe the scope of the Storm Water Permit. First, the Storm Water Permit includes water quality and watershed protection measures for all discharges to the storm drainage system, not only development projects. Development projects are subject to specific measures included in the Storm Water Permit and implemented as described in | In response to this comment, and shown in Chapter 4.0 of this Response to Comments Document, text on page 4.10-20 has been revised as follows:<br>The City of Fresno is a co-permittee with the FMFCD, the County of Fresno, the City of Clovis, and California State University Fresno in the Phase 1 NPDES Permit for Stormwater Discharges from Municipal Separate Storm Sewer Systems (MS4s). This Phase 1 MS4 Permit requires that the City and its co-permittees implement water quality and watershed protection measures for all development projects. In addition, the co-permittee agencies are also covered under NPDES Permit No. CAS0085324 (Storm Water Permit) effective May 17, 2018. The previous Storm Water Permit (adopted on May 31, 2013) required the adoption of Stormwater Quality Management Program (SWQMP) that describes the Storm Water Permit implementation actions and Co-Permittee responsibilities. That SWQMP was approved by the Central Valley Regional Water Quality Control Board on April 17, 2015 as is effective until adoption of a new SWQMP.<br>The Strom Water Permit includes water quality and watershed protection measures for all discharges to the storm drainage system, not only discharges from development projects. Development projects are subject to specific measures included |

## Table 3.A: Comments and Responses Matrix

| Letter/ Comment Number | Comment | Response |
|---|---|---|
| | the SWQMP. The SWQMP should be incorporated by reference in the PEIR. The SWQMP can be found at the link below:<br>http://www.fresnofloodcontrol.org/wp-content/uploads/2015/11/Stormwater-Quality-Management-Plan-2013.pdf<br>The Storm Water Permit requires that Co-Permittees update their CEQA process to incorporate procedures for considering potential stormwater quality impacts when preparing and reviewing CEQA documents. This requirement is found on Provision D.14 of the 2013 Storm Water Permit and in Section 7: Planning and Land Development Program – PLD 3 - Update CEQA Process. The District has created a guidance document that will meet this Storm Water Permit requirement entitled Guidance for Addressing Stormwater Quality for CEQA Review, which has been attached. Following the Guidance document will meet District CEQA water quality requirements. | in the Storm Water Permit and implemented as described in the SWQMP. The waste discharge requirements contained in the NPDES Permit have been designed to be consistent with the water quality standards and goals established in the Central Valley RWQCB's Basin Plan. The Phase 1 MS4 Permit prohibits discharges from violating applicable water quality standards or creating a nuisance or water quality impairment in receiving waters. Participation in the Phase 1 MS4 permit and implementation of the SDFCMP will reduce impacts to surface waters to acceptable levels and long-term project impacts to surface or groundwater quality will not exceed acceptable levels.<br>Text revisions indicated above provide clarification in response to the comment and do not constitute significant new information that would require recirculation of the Draft PEIR. |
| B2-6 | Secondly, the City of Fresno's authority as a land use agency gives the City of Fresno responsibility to implement certain storm water quality measures. The SWQMP requires a Memorandum of Understanding (MOU) between the District and the City of Fresno that identify those activities best suited for the City of Fresno to perform related to planning, inspection and enforcement of NPDES Permit requirements. The District has a current MOU adopted in 2014 and this MOU will need to be updated after adoption of the next SWQMP. Since the 2014 MEIR was certified, the following regulatory programs have been adopted by the State Water Resources Control Board that the City of Fresno must coordinate with FMFCD to effectively implement:<br>● Amendment to the Water Quality Control Plan for Part 1 Trash Provisions of the Water Quality Control Plan for Inland Surface Waters, Enclosed Bays, and Estuaries of California; and<br>● Amendment to the Water Quality Control Plan for the Sacramento and San Joaquin River Basins for the Control of Pyrethroid Pesticide Discharges. | The City acknowledges the need to update the Memorandum of Understanding with the FMFCD following the adoption of the next Stormwater Quality Management Program. The City will coordinate with FMFCD to effectively implement the amendments to the Water Quality Control Plan related to trash provisions for inland surface waters and the control of pesticide discharges in San Joaquin River basins. |

## Table 3.A: Comments and Responses Matrix

| Letter/ Comment Number | Comment | Response |
|---|---|---|
| B2-7 | 5. Page 4.10-28, Second paragraph; One hundred thirty (130) should be corrected to One hundred thirty-two (132). | In response to this comment, and shown in Chapter 4.0 of this Response to Comments Document, text on page 4.10-28 has been revised as follows:<br>FMFCD's Storm Drainage and Flood Control Master Plan divides the Planning Area into a number of drainage areas or urban watersheds. Each drainage area has its own Master Planned pipeline collection system and retention or urban detention basin. One hundred thirty two (132~~130~~) master planned drainage areas are completely or partially within the Planning Area. Three of the master planned drainage areas have collection systems, but do not have retention basins. The disposal of stormwater from these drainage areas occurs by pumping the stormwater directly into a nearby irrigation canal. Eight of the master planned drainage areas discharge to the San Joaquin River. One drainage area discharges directly to the river. Seven discharge to the river from urban detention (water quality) basins.<br>Text revisions indicated above provide a correction in response to the comment and do not constitute significant new information that would require recirculation of the Draft PEIR. |
| B2-8 | 6. Page 4.10-28, Second paragraph; One drainage area discharges... should be corrected to Two. Seven discharges to the river... should be corrected to Six. | In response to this comment, and shown in Chapter 4.0 of this Response to Comments Document, text on page 4.10-28 has been revised as follows:<br>FMFCD's Storm Drainage and Flood Control Master Plan divides the Planning Area into a number of drainage areas or urban watersheds. Each drainage area has its own Master Planned pipeline collection system and retention or urban detention basin. One hundred thirty two (132~~130~~) master planned drainage areas are completely or partially within the Planning Area. Three of the master planned drainage areas have collection systems, but do not have retention basins. The disposal of stormwater from these drainage areas occurs by pumping the stormwater directly into a nearby irrigation canal. Eight of the master planned drainage areas discharge to the San Joaquin River. Two~~One~~ drainage areas |

## Table 3.A: Comments and Responses Matrix

| Letter/ Comment Number | Comment | Response |
|---|---|---|
| | | discharges directly to the river. Six~~Seven~~ discharge to the river from urban detention (water quality) basins.<br>Text revisions indicated above provide a correction in response to the comment and do not constitute significant new information that would require recirculation of the Draft PEIR. |
| B2-9 | 7. Page 4.10-30, Paragraphs 2 and 7; FCMFCD should be corrected to say FMFCD. | In response to this comment, and shown in Chapter 4.0 of this Response to Comments Document, Mitigation Measure HYD-3.2 and Mitigation Measure HYD-3.3 on page 4.10-30 have been revised as follows:<br>**Mitigation Measure HYD-3.2:** The City shall implement the following measures to reduce the impacts on the capacity of existing or planned SDFCMP retention basins:<br>Prior to approval of development projects, coordinate with FMFCD~~FCMFCD~~ to analyze the impacts to existing and planned retention basins to determine remedial measures required to reduce the impact on retention basin capacity to less than significant. Remedial measures would include:<br>1. Increase the size of the retention basin through the purchase of more land or deepening the basin or a combination for planned retention basins.<br>~~2. Increase the size of the emergency relief pump capacity required to pump excess runoff volume out of the basin and into adjacent canal that convey the stormwater to a disposal facility for existing retention basins.~~<br>2~~3~~. Require developments that increase runoff volume to install, operate, and maintain, Low Impact Development (LID) measures to reduce runoff volume to the runoff volume that will not exceed the capacity of the existing retention basins.<br>**Mitigation Measure HYD-3.3:** The City shall implement the following measures to reduce the impacts on the capacity of existing or planned SDFCMP urban detention (stormwater quality) basins: |

## Table 3.A: Comments and Responses Matrix

| Letter/ Comment Number | Comment | Response |
|---|---|---|
| | | Prior to approval of development projects, coordinate with FMFCD~~FCMFCD~~ to determine the impacts to the urban detention basin weir overflow rates and determine remedial measures required to reduce the impact on the detention basin capacity to less than significant. Remedial measures would include:<br>1. Modify overflow weir to maintain the suspended solids removal rates adopted by the FMFCD Board of Directors.<br>2. Increase the size of the urban detention basin to increase residence time by purchasing more land. The existing detention basins are already at the adopted design depth.<br>3. Require developments that increase runoff volume to install, operate, and maintain, Low Impact Development (LID) measures to reduce peak runoff rates and runoff volume to the runoff rates and volumes that will not exceed the weir overflow rates of the existing urban detention basins.<br>Text revisions indicated above provide a correction in response to the comment and do not constitute significant new information that would require recirculation of the Draft PEIR. |
| B2-10 | 8. Page 4.10-30, Mitigation Measure HYD-3.2; Item 2 should be removed. | In response to this comment, and shown in Chapter 4.0 of this Response to Comments Document, Mitigation Measure HYD-3.2 on page 4.10-30 has been revised as follows:<br>**Mitigation Measure HYD-3.2:** The City shall implement the following measures to reduce the impacts on the capacity of existing or planned SDFCMP retention basins:<br>Prior to approval of development projects, coordinate with FMFCD~~FCMFCD~~ to analyze the impacts to existing and planned retention basins to determine remedial measures required to reduce the impact on retention basin capacity to less than significant. Remedial measures would include:<br>1. Increase the size of the retention basin through the purchase of more land or deepening the basin or a combination for planned retention basins. |

## Table 3.A: Comments and Responses Matrix

| Letter/ Comment Number | Comment | Response |
|---|---|---|
| | | ~~2. Increase the size of the emergency relief pump capacity required to pump excess runoff volume out of the basin and into adjacent canal that convey the stormwater to a disposal facility for existing retention basins.~~<br>2~~3~~. Require developments that increase runoff volume to install, operate, and maintain, Low Impact Development (LID) measures to reduce runoff volume to the runoff volume that will not exceed the capacity of the existing retention basins.<br>Text revisions indicated above provide a correction in response to the comment and do not constitute significant new information that would require recirculation of the Draft PEIR. |
| B2-11 | 9. Page 4.10-31, Paragraphs 2 and 5; FCMFCD should be corrected to say FMFCD. | In response to this comment, Mitigation Measure HYD-3.4 and Mitigation Measure HYD-3.5 on page 4.10-31 have been revised as follows:<br>**Mitigation Measure HYD-3.4:** The City shall implement the following measures to reduce the impacts on the capacity of existing or planned SDFCMP pump disposal systems:<br>1. Prior to approval of development projects, coordinate with FMFCD~~FCMFCD~~ to determine the extent and degree to which the capacity of the existing pump system will be exceeded.<br>2. Require new developments to install, operate, and maintain on-site detention facilities, consistent with FMFCD design standards, to reduce peak stormwater runoff rates to existing planned peak runoff rates.<br>3. Provide additional pump system capacity to maximum allowed by existing permitting to increase the capacity to match or exceed the peak runoff rates determined by the SDFCMP.<br>**Mitigation Measure HYD-3.5:** The City shall coordinate with FMFCD~~FCMFCD~~ to develop and adopt a storm drainage update to the SDFCMP for the Southeast Development Area that is designed to collect, convey and dispose of runoff rates and volumes based on the planned land uses of the approved General Plan. |

## Table 3.A: Comments and Responses Matrix

| Letter/ Comment Number | Comment | Response |
|---|---|---|
| | | Text revisions indicated above provide a correction in response to the comment and do not constitute significant new information that would require recirculation of the Draft PEIR. |
| B2-12 | 10. Page 4.17-6, Last paragraph; 170 should be corrected to 165. | In response to this comment, and shown in Chapter 4.0 of this Response to Comments Document, text on page 4.17-6 has been revised as follows:<br>Stormwater collection and disposal, and flood control for the City of Fresno, City of Clovis, and the unincorporated areas within the City of Fresno's sphere of influence are provided by the Fresno Metropolitan Flood Control District (FMFCD). The FMFCD is a special district created by the State of California Legislature and ratified by the voters of the district in 1956. FMFCD has 165~~more than 170~~ urban watersheds that collect stormwater runoff and dispose of the runoff in retention basins, local canals, or the San Joaquin River. Each urban watershed, called a drainage area by FMFCD, consists of a collection system and, in most cases, a retention basin to store and dispose of the runoff. Three drainage areas are pumped directly into a nearby canal and six drainage areas have collection systems that discharge to the San Joaquin River. Pipeline collection systems have diameters that range from 15 inches to 108 inches. Retention basins range in size from 5 acres to 25 acres, with most being 8 to 10 acres in size. The flood control system consists of three dams and reservoirs, five detention basins, one diversion channel, and up to 175 miles of rural stream channels.<br>Text revisions indicated above provide a correction in response to the comment and do not constitute significant new information that would require recirculation of the Draft PEIR. |
| B2-13 | 11. Page 4.17-6, Last paragraph add comma and include additional language; two drainage areas directly discharge to the San Joaquin River. | In response to this comment, text on page 4.17-6 has been revised as follows:<br>Stormwater collection and disposal, and flood control for the City of Fresno, City of Clovis, and the unincorporated areas within the City of Fresno's sphere of influence are provided by the Fresno |

## Table 3.A: Comments and Responses Matrix

| Letter/ Comment Number | Comment | Response |
|---|---|---|
| | | Metropolitan Flood Control District (FMFCD). The FMFCD is a special district created by the State of California Legislature and ratified by the voters of the district in 1956. FMFCD has 165~~more than 170~~ urban watersheds that collect stormwater runoff and dispose of the runoff in retention basins, local canals, or the San Joaquin River. Each urban watershed, called a drainage area by FMFCD, consists of a collection system and, in most cases, a retention basin to store and dispose of the runoff. Three drainage areas are pumped directly into a nearby canal, two drainage areas directly discharge to the San Joaquin River, and six drainage areas have collection systems that discharge to the San Joaquin River. Pipeline collection systems have diameters that range from 15 inches to 108 inches. Retention basins range in size from 5 acres to 25 acres, with most being 8 to 10 acres in size. The flood control system consists of three dams and reservoirs, five detention basins, one diversion channel, and up to 175 miles of rural stream channels.<br><br>Text revisions indicated above provide a correction in response to the comment and do not constitute significant new information that would require recirculation of the Draft PEIR. |
| B2-14 | 12. Page 4.17-6, Last sentence; should be corrected from 108 inches to 96 inches. | In response to this comment, and shown in Chapter 4.0 of this Response to Comments Document, text on page 4.17-6 has been revised as follows:<br><br>Stormwater collection and disposal, and flood control for the City of Fresno, City of Clovis, and the unincorporated areas within the City of Fresno's sphere of influence are provided by the Fresno Metropolitan Flood Control District (FMFCD). The FMFCD is a special district created by the State of California Legislature and ratified by the voters of the district in 1956. FMFCD has 165~~more than 170~~ urban watersheds that collect stormwater runoff and dispose of the runoff in retention basins, local canals, or the San Joaquin River. Each urban watershed, called a drainage area by FMFCD, consists of a collection system and, in most cases, a retention basin to store and dispose of the runoff. Three drainage |

## Table 3.A: Comments and Responses Matrix

| Letter/ Comment Number | Comment | Response |
|---|---|---|
| | | areas are pumped directly into a nearby canal, two drainage areas directly discharge to the San Joaquin River, and six drainage areas have collection systems that discharge to the San Joaquin River. Pipeline collection systems have diameters that range from 15 inches to 96~~108~~ inches. Retention basins range in size from 5 acres to 25 acres, with most being 8 to 10 acres in size. The flood control system consists of three dams and reservoirs, five detention basins, one diversion channel, and up to 175 miles of rural stream channels.<br><br>Text revisions indicated above provide a correction in response to the comment and do not constitute significant new information that would require recirculation of the Draft PEIR. |
| B2-15 | 13. Page 4.17-7, Second paragraph; over 170 should be corrected to say 165. Six cases should be corrected to eight. Four discharge should be corrected to six. | In response to this comment, and shown in Chapter 4.0 of this Response to Comments Document, text on page 4.17-7 has been revised as follows:<br><br>**Stormwater Collection and Disposal.** FMFCD provides drainage service to the Fresno metropolitan area. In order to provide this service, the FMFCD has organized the metropolitan area into 165~~over 170~~ urban drainage areas or watersheds. Watersheds are delineated along topographic boundaries and are limited in size to between 200 acres to 600 acres. The area limitation reduces the size of the required collection facilities and disposal facilities. The service is provided through the combination of surface drainage improvements, chiefly curbs and gutters, that direct runoff to storm drainage inlets, which collect the runoff and convey the runoff to underground pipeline collection systems. The collection systems convey the stormwater to disposal facilities, which in the majority of cases are excavated, unlined basins. In three cases, the collection systems discharge to pump wet wells from which the stormwater is lifted into an adjacent canal, and in eight~~six~~ cases, the stormwater is discharged into the San Joaquin River. Two of these systems discharge directly to the San Joaquin River and six~~four~~ discharge to a water quality basin |

## Table 3.A: Comments and Responses Matrix

| Letter/ Comment Number | Comment | Response |
|---|---|---|
| | | before discharge to the river occurs.<br>Text revisions indicated above provide a correction in response to the comment and do not constitute significant new information that would require recirculation of the Draft PEIR. |
| B2-16 | 14. Page 4.17-7, Last paragraph; Remove the words "Community Block Grants and" from the sentence. | In response to this comment, and shown in Chapter 4.0 of this Response to Comments Document, text on page 4.17-7 has been revised as follows:<br>FMFCD has utilized three means to implement drainage systems for the metropolitan area. One method has been to use ~~Community Block Grants and~~ low interest infrastructure loans from the State of California to construct drainage facilities in the older, previously developed areas of the City. A second method has been to form assessment districts under the provisions of the 1915 Bond Act. Assessment districts were formed based on drainage area boundaries, the parcels within the assessment districts were assessed a proportional share of the cost of the collection and disposal system, and the drainage system for the drainage area was constructed. The third and currently employed method is to collect drainage fees from parcels as they develop based on their prorated share of the cost of the drainage area collection and disposal systems. The implementing ordinance for the drainage fee structure is adopted by the City of Fresno, and the drainage fees are collected by the City when entitlements are granted or building permits are issued.<br>Text revisions indicated above provide a correction in response to the comment and do not constitute significant new information that would require recirculation of the Draft PEIR. |
| B2-17 | 15. Page 4.17-26, Stormwater Section, second paragraph; should say 132 individual drainage areas. | In response to this comment, and shown in Chapter 4.0 of this Response to Comments Document, text on page 4.17-26 has been revised as follows:<br>Storm drainage facilities within the Planning Area as well as within Clovis are planned, implemented, operated, and maintained by the FMFCD. The existing and planned storm |

## Table 3.A: Comments and Responses Matrix

| Letter/ Comment Number | Comment | Response |
|---|---|---|
| | | drainage facilities are documented in the Storm Drainage and Flood Control Master Plan (SDFCMP), which is developed and updated by FMFCD. The master plan drainage system for the Planning Area consists of approximately 132~~160~~ individual drainage areas or urban watersheds. The majority of the Planning Area is located within one of the individual drainage areas or urban watersheds.<br>Text revisions indicated above provide a correction in response to the comment and do not constitute significant new information that would require recirculation of the Draft PEIR. |
| B2-18 | Thank you for the opportunity to comment. If you have any questions or require further information, please do not hesitate to contact the District at (559) 456-3292. | This comment provides a closing to the comment letter and does not question the adequacy of the analysis included in the Draft PEIR. No further response is required. |
| **B3** | **San Joaquin Valley Air Pollution Control District (May 5, 2020)** | |
| B3-1 | The San Joaquin Valley Unified Air Pollution Control District (District) has reviewed the Draft Program Environmental Impact Report (PEIR) for the City of Fresno General Plan (Project) referenced above. The Project is to update the approved 2014 General Plan in order to reflect changes in applicable statutes and regulations related to Vehicle Miles Traveled (VMT), to include a current baseline for the continued implementation of the approved General Plan, and to reflect changes in City Planning documents that have occurred since adoption of the approved General Plan in 2014. The City of Fresno (City) is not proposing any land use changes as a part of this Project, but it does include an update to the City's Greenhouse Gas Reduction Plan.<br>The District appreciates the opportunity to review the PEIR and offers the following comments: | This comment provides an introduction to the comment letter and briefly summarizes the commenter's understanding of the proposed project. This comment does not address the adequacy or completeness of the Draft PEIR; does not raise environmental issues; and does not request the incorporation of additional information relevant to environmental issues. Such comments do not require a response, pursuant to Section 15088(a) of the State CEQA Guidelines. No further response is necessary. |
| B3-2 | 1. Ongoing Commitment to Strengthen Working Relationship<br>The District appreciates the City's ongoing commitment to strengthen the working relationship with the District, and commits to supporting the City in identifying and mitigating impacts on air quality through the CEQA review process.<br>Consistent with this cooperative effort and in order to address air quality impacts and concerns prior to future development projects occurring, the District recommends that the City develop administrative mechanisms and policies that ensure consistency in providing the District with information about projects under consideration by the City, | This comment recommends that the City provide an assessment evaluating potential project construction and operation related to air quality impacts. As noted on page 4.3-39 of the Draft PEIR, implementation of the approved General Plan would result in many individual development projects for which information regarding specifics are currently unknown. Therefore, Mitigation Measure AIR-2.1 has been identified which would require that prior to approval of future projects, applicants will be required to submit an assessment |

## Table 3.A: Comments and Responses Matrix

| Letter/ Comment Number | Comment | Response |
|---|---|---|
| | such as land use designation, project size, and proximity to sensitive receptors and existing emission sources. To aid the City in determining a project's potential impacts, the District recommends the City provide an assessment evaluating potential project construction and operation related to air quality impacts to the District as early as possible. Additionally, the District is available to work with the City and project applicants on future development projects to address air quality impacts and concerns. The District encourages the City to include in the General Plan a section that advises project applicants to reach out and work with the District. The District's goal is to assist with enhancing project designs in the early stages of the planning process for a better overall project with minimized impact on air quality and early identification of feasible mitigation measures. | of potential project construction phase-related air quality impacts. Additionally, Mitigation Measure AIR-2.2 would require project applicants to prepare a technical assessment evaluating potential project operation-related air quality impacts. These mitigation measures would be required through the duration of implementation of the approved General Plan.<br>This comment also states that the District is available to work with the City and project applicants on future development projects and encourages the City to include a section in the approved General Plan that advises project applicants to work with the District. Revisions to the approved General Plan are limited to changes to the VMT, however, as outlined in Section 4.3.5.4 Local Policies and Regulations, the approved General Plan already includes several policies and objectives that direct coordination with the SJVAPCD to achieve compliance with State and federal air quality standards for criteria air pollutants, consistent with the District's goal of minimizing air quality impacts. |
| B3-3 | 2. Project Siting<br>The General Plan is the blueprint for future growth and provides guidance for the community's development. The Project itself will not have an impact on air quality. However, without appropriate mitigation, future development projects within the City may contribute to negative impacts on air quality due to increased traffic and ongoing operational emissions. The General Plan sets the planning guidelines for where future developments can be sited and includes the City's comprehensive community goals, policies, and objectives. Appropriate project siting helps ensure there is adequate distance between conflicting land uses, to prevent or reduce both localized and cumulative air pollution impacts from commercial and industrial land uses that are in close proximity to schools or residential areas. Possible planning resources that may be included in the General Plan that are available to the City and future developers include:<br>● California Air Board Resources' (CARB) Air Quality and Land Use Handbook: A Community Health Perspective. The document includes tables with recommended buffer distances associated with various types of common sources (e.g. distribution centers, chrome platers, gasoline dispensing facilities, and etc.). Document can be | This comment provides references to possible planning resources that may be included in the approved General Plan. As noted in response to comment B3-2, the revisions to the approved General Plan were limited to the changes that were required to bring the approved General Plan into conformance with State law and recent legislative changes. The references provided in this comment do not change the findings of the Draft PEIR and will be considered for future reference. It should be noted that the City included the reference to the California Air Resources Board's (CARB) Air Quality and Land Use Handbook: A Community Health Perspective, and the recommended buffer distances have been incorporated into future analysis requirements as outlined in Mitigation Measure AIR-3.2. |

## Table 3.A: Comments and Responses Matrix

| Letter/ Comment Number | Comment | Response |
|---|---|---|
| | found at: https://ww3.arb.ca.gov/ch/handbook.pdf<br>● CARB Freight Handbook. This document will compile the best practices designed to address air pollution impacts as "practices" which may apply to the siting, design, construction, and operation of freight facilities to minimize health impacts on nearby communities. CARB and the District are committed to work cooperatively to advance implementation of the best practices discussed in Tables 5 and 6 of the Freight Handbook Concept Paper. CARB Freight Handbook documents can be found at:<br>○ CARB Freight Handbook: https://ww2.arb.ca.gov/our-work/programs/freight-handbook<br>○ Freight Handbook Concept Paper: https://ww2.arb.ca.gov/sites/default/files/2020-03/2019.12.12%20-%20Concept%20Paper%20for%20the%20Freight%20 Handbook_1.pdf | |
| B3-4 | 3. Reducing Vehicle Miles Traveled<br>The District is currently designated as extreme non-attainment of the federal national ambient air quality standard for ozone and non-attainment for PM2.5. Mobile source emissions resulting from growth and development could have significant impacts on air quality. To reduce the project related impacts on air quality, the General Plan should include language supported by policy establishing standards designed to reduce vehicle miles traveled (VMT). The General Plan VMT can be reduced through encouragement of mixed-use development, walkable communities, and other project design elements.<br>To aid agencies in addressing VMT impacts the District has prepared the following guidance documents: Air Quality Guidelines for General Plans, and AB 170 Requirements for General Plans. These documents provide general information and recommendations for policies that are effective in reducing impacts from growth and development projects. The District appreciates the City for its effort in integrating recommendations identified in the Air Quality Guidelines for General Plans document into the proposed General Plan. These documents are available on the District's website at: http://www.valleyair.org/transportation/Guidelines_for_General_Plans.htm.<br>Additionally, recommended design elements can be found on the District's website at: http://www.valleyair.org/transportation/Mitigation-Measures.pdf. | This comment suggests that the approved General Plan should include language supported by policy establishing standards designed to reduce vehicle miles traveled. It should be noted that the purpose of the revised General Plan was to amend the approved General Plan Mobility and Transportation Element and includes the addition of VMT policies consistent with the requirements of Senate Bill (SB) 743 and the revision of text related to Level of Service (LOS) metrics. As described in detail in Section 4.16 of the Draft PEIR, the approved General Plan includes several policies to reduce VMT and the revisions to the approved General Plan will facilitate the adoption of VMT policies to reduce VMT citywide. |

## Table 3.A: Comments and Responses Matrix

| Letter/ Comment Number | Comment | Response |
|---|---|---|
| B3-5 | 4. Comments on "Health Effects Summary" Discussion in General Plan (Section 4.3.7.1)<br>Under the "Health Effects Summary", the District recommends that General Plan account for the Court's holding in Sierra Club v. County of Fresno (2018) 6 Cal.5th 502 (Friant Ranch), where the California Supreme Court held that an EIR's general discussion of adverse health impacts for exposure to ozone and PM is inadequate where it only provides a "general description of symptoms that are associated with exposure to ozone and the discussion of health impacts regarding each type of pollutant is at most a few sentences of general information," and where the "disclosures of health effects fail to indicate the concentrations of which such pollutants would trigger the identified symptoms." The court explained that CEQA requires that an EIR make "a reasonable effort to discuss relevant specifics regarding the connection between the general health effects associated with a particular pollutant and the estimated amount of that pollutant the project will likely produce." If it is not scientifically possible to do more to connect adverse air quality impacts from a project with potential human health impacts, the EIR itself must explain "why, in a manner reasonably calculated to inform the public of the scope of what is and is not yet known about the Project's impacts." EIR's are inadequate if they fail to provide information on the "nature and magnitude" of the health and safety problems caused by the physical changes resulting from the Project aside from a generalized "better/worse dichotomy." Instead, an "EIR must provide an adequate analysis to inform the public how its bare numbers translate to create potential adverse impacts or it must adequately explain what the agency does know and why, given existing scientific constraints, it cannot translate potential health impacts further." The District recommends that the General Plan include a discussion of how the Plan, particularly future projects developed under the Plan, will endeavor to conform to the Court's holding. | In this comment, the District recommends that the approved General Plan include a discussion of how future projects would conform to the Court's holding in Sierra Club v. County of Fresno (Friant Ranch). Fresno County prepared an EIR to address potential environmental impacts resulting from the Friant Ranch project, a Specific Plan project. In contrast, the PEIR provides analysis on the long-term buildout of the approved General Plan for the City of Fresno.<br>Health effects of air pollutants related to continued implementation of the approved General Plan are described in Table 4.3-4 of the Draft PEIR. Health effects of the project are described on page 4.3-53 through page 4.3-54 of the Draft PEIR. The text on these pages constitutes a reasonable effort to discuss the connection between the health effects and the pollutants associated with project. The Draft PEIR describes the total emission inventory for Fresno County in Table 4.3-2 and compares it to the project emissions in Table 4.3-9 which shows the correlation between City of Fresno emissions and total Countywide emissions. Photochemical modeling of the Air Basin would determine pollutant concentrations, however, given the small amount of project related emissions when compared to a countywide or basin-wide total emissions, the pollutant load from the continued implementation of the General Plan would not alter the regional air pollutant concentrations due to the relatively small fraction of emissions from the project when compared to basin wide emissions. Computer models used to simulate and predict air quality for ozone or particulate matter are based on regional inputs, such as basin wide inventories of pollutants, the atmospheric chemistry, and meteorology of the valley. As noted by the SJVAPCD in the Brief of Amicus Curiae by the SJVAPCD (2015), an analysis correlating the criteria air pollutant emissions associated with project specific localized health –impacts does not yield reliable information because currently available modeling tools (i.e., basin wide photochemical modeling) are not well suited for this task due to the complexity and extensive data inputs needs that would be required.<br>As discussed in the Draft PEIR, the SJVAPCD's project level thresholds |

## Table 3.A: Comments and Responses Matrix

| Letter/ Comment Number | Comment | Response |
|---|---|---|
| | | are based in part on Section 180 (e) of the Clean Air Act. The project level thresholds are intended to provide a means of consistency in significance determination within the environmental review process. As such, simply exceeding the SJVAPCD's project level thresholds does not constitute a particular health impact to an individual nearby. The reason for this is that the project level thresholds are in tons/year emitted into the air, whereas health effects are determined based on the concentration of a pollutant in the air at a particular location (e.g., ppm by volume of air or $\mu g/m^3$ of air). CAAQS and NAAQS were developed to protect the most susceptible population groups from adverse health effects and were established in terms of ppm or $\mu g/m^3$ for the applicable emissions. The project emissions would not be expected to exceed the most stringent applicable NAAQS or CAAQS for $NO_X$, $PM_{2.5}$, and $PM_{10}$. As discussed in the Draft PEIR and as noted in the Brief of Amicus Curiae by the SJVAPCD (2015), the SJVAPCD has acknowledged that currently available modeling tools are not equipped to provide a meaningful analysis of the correlation between an individual development project's air emissions and specific human health impacts. (See page 4 of the SJVAPCD Brief of Amicus Curiae). Additionally, the SJVAPCD acknowledges that health effects quantification from ozone, as an example, is correlated with the increases in ambient level of ozone in the air (concentration) that an individual person breathes. The SJVAPCD indicates that it would take a large amount of additional emissions to result in a modeled increase in ambient ozone levels over the entire region. As such, it is not currently possible to accurately quantify ozone-related health impacts caused by $NO_X$ or VOC emissions from relatively small projects (defined as projects with a regional scope) due to photochemistry and regional model limitations. For comparison purposes, the Draft PEIR describes the total emission inventory for Fresno County in Table 4.3-2 and compares it to the project emissions in Table 4.3-9 which shows the correlation between City of Fresno emissions and total Countywide emissions for this context. |

## Table 3.A: Comments and Responses Matrix

| Letter/ Comment Number | Comment | Response |
|---|---|---|
| | | As such, the project's emissions are not sufficiently high enough to use a regional modeling program to correlate health effects on a Basin-wide level. Further, the SJVAPCD acknowledges the same: "…the Air District is simply not equipped to analyze and to what extent the criteria pollutant emissions of an individual CEQA project directly impact human health in a particular area…even for projects with relatively high levels of emissions of criteria pollutant precursor emissions." (See page 8 of the SJVAPCD Brief of Amicus Curiae.) The SJVAPCD Brief of Amicus Curiae are incorporated by reference into the Draft PEIR.<br>Future development projects implemented as part of the project would be required to comply with Mitigation Measure AIR-2.2 which would require a technical evaluation prepared in conformance with current SJVAPCD methodology for assessing air quality impacts. Therefore, as new modeling techniques become available over the life of the project, future projects would be evaluated using the latest methods, which could include new methodologies for modeling project-specific health risks.<br>This comment also suggests that the approved General Plan be revised to include a discussion of how the approved General Plan will endeavor to conform to the Court's ruling. As noted above, changes to the approved General Plan were limited to specific changes that are required to bring the approved General Plan into conformance with State law and recent legislative changes. Therefore, no additional changes to the approved General Plan are proposed at this time. |
| B3-6 | 5. Assembly Bill 617<br>Assembly Bill (AB) 617 (2017, Garcia) requires the California Air Resources Board (CARB) and air districts to develop and implement Community Emission Reduction Programs (CERPs) in an effort to reduce air pollution exposure in impacted disadvantaged communities. The South Central Fresno area is one of the first Valley communities selected by CARB for investment of additional air quality resources and attention under AB 617. | This comment encourages the City to further assess the emission reduction measures and strategies contained in the Community Emission Reduction Programs (CERPS) and address them in the Fresno General Plan. This comment is noted. The approved General Plan is the City's long-range plan for future development in the City. The revisions to the approved General Plan at this time are limited to specific changes related to VMT and compliance with recent legislative updates. As outlined in Section 4.3.5.4 Local Policies and |

## Table 3.A: Comments and Responses Matrix

| Letter/ Comment Number | Comment | Response |
|---|---|---|
| | Developed through an extensive community engagement process and Community Steering Committee, the CERP for the South Central Fresno Community was adopted by the District Governing Board in September 2019 and by the CARB Board in February 2020. The CERP identifies a wide range of measures designed to reduce air pollution and exposure, including a number of strategies to be implemented in partnership between agencies and local organizations. One of the measures identified and prioritized in the CERP includes working collaboratively with the City of Fresno to enhance community participation in land use processes, including working together to ensure more comprehensive opportunities for public input on land use decisions, and better communicating and understanding air quality impacts and potential mitigation.<br>Recognizing that a large portion of the City consists of the South Central Fresno AB 617 community, the District encourages the City to further assess the emission reductions measures and strategies contained in the CERP, and address them in the Fresno General Plan, as appropriate.<br>For more details about the South Central Fresno CERP, please visit the District website at: http://community.valleyair.org/media/1516/01finalscfresnocerp-9-19-19.pdf. | Regulations, the approved General Plan includes several policies and objectives that direct coordination with the SJVAPCD to achieve compliance with State and federal air quality standards for criteria air pollutants, consistent with the District's goal of minimizing air quality impacts. The Draft PEIR also identified Mitigation Measure AIR-3.1 that would require all new development proposals for new industrial or warehousing land uses to prepare Health Risk Assessment reports to minimize impacts to off-site receptors. In addition, Mitigation Measure AIR-3.2 requires the siting of sensitive land uses to avoid incompatibilities with the CARB's recommended Air Quality and Land Use Handbook. These mitigation measures are consistent with the goals of the CERP to reduce air exposure in impacted disadvantages communities. |
| B3-7 | 6. Recommendations for Future Development Projects<br>The following recommendations should be considered for inclusion in the PEIR to address impacts resulting from future development projects on air quality:<br>A. Construction Related Emissions<br>Mitigation Measure (MM) Air-2.1 in the Draft PEIR states,<br>*"Prior to future discretionary project approval, development project applicants shall prepare and submit to the Director of the City Planning and Development Department, or designee, a technical assessment evaluating potential project construction phase-related air quality impacts. The evaluation shall be prepared in conformance with SJVAPCD methodology for assessing construction impacts. If construction related air pollutants are determined to have the potential to exceed the SJVAPCD adopted threshold of significance, the Planning and Development Department shall require that applicants for new development projects incorporate mitigation measures into construction plans to reduce air pollutant emissions during construction activities."*<br>Per the Draft PEIR, if construction emissions for specific future development projects would result in a significant impact on air quality, the new development project will be | This comment recommends modifications and additions to Mitigation Measure AIR-2.1 in the Draft PEIR. The Mitigation Measure AIR-2.1 lists possible mitigation options to reduce construction emissions; however, actual measures will be determined at the project level during the discretionary project review process. The approved General Plan is a long-term planning level document; and therefore, identification of specific measures recommended by the District are not necessary at this time. Project applicants will be required to identify applicable mitigation measures based on current technology at the time a development is proposed in order to reduce emissions to a less-than-significant level. Therefore, Mitigation Measure AIR-2.1 has not been revised. |

## Table 3.A: Comments and Responses Matrix

| Letter/ Comment Number | Comment | Response |
|---|---|---|
| | required to incorporate mitigation measures, such as the use of diesel oxidation catalysts and/or catalyzed diesel particulate traps on diesel equipment, into their construction plans.<br>To reduce impacts from construction-related exhaust emissions and activities, the District recommends the proposed mitigation measure Air-2.1 be modified to include the following additional potential mitigation measures:<br>● Requiring all future development projects with construction-related exhaust emissions and activities resulting in significant impacts on air quality to utilize the cleanest reasonably available off-road construction fleets and practices (i.e. eliminating unnecessary idling), and<br>● Advising all future development projects with construction-related exhaust emissions and activities resulting in a less than significant impact on air quality to utilize the cleanest reasonably available off-road construction fleets and practices (i.e. eliminating unnecessary idling). | |
| B3-8 | B. Operational Related Emissions – Heavy Duty Trucks and Other Heavy Duty Equipment<br>Mitigation Measure (MM) Air-2.2 in the Draft PEIR states:<br>*"Prior to future discretionary project approval, development project applicants shall prepare and submit to the Director of the City Planning and Development Department, or designee, a technical assessment evaluating potential project operation-related air quality impacts. The evaluation shall be prepared in conformance with SJVAPCD methodology in assessing air quality impacts. If operation-related air pollutants are determined to have the potential to exceed the SJVAPCD-adopted thresholds of significance, the Planning and Development Department shall require that applicants for new development projects incorporate mitigation measures to reduce air pollutant emissions during operational activities."*<br>Per the Draft PEIR, new development projects that result in significant impact on air quality for operational emissions are required to incorporate clean air project design elements aimed at reducing project impact on air quality to less than significant when feasible.<br>The San Joaquin Valley will not be able to attain stringent health-based federal air quality standards without significant reductions in emissions from Heavy Heavy Duty (HHD) Trucks, the single largest source of NOx emissions in the San Joaquin Valley. The District | This comment suggests modifications to Mitigation Measure AIR-2.2 related to operational fleets and additional reductions to projects that do not result in significant air quality impacts. The Draft General Plan PEIR is a programmatic document and will be implemented overtime as development occurs within the City. Mitigation Measure AIR-2.2 will require future development project applicants to prepare and submit a technical evaluation of project operation-related air quality impacts in conformance with SJVAPCD methodology. As noted in the discussion, applicants will be required to incorporate mitigation measure to reduce air pollutant emissions during operational activities. Specific mitigation measures will need to be considered on project-by-project basis during the discretionary review process. All potential measures would be considered, consistent with District guidance. Therefore, Mitigation Measure AIR-2.2 has not been revised. |

## Table 3.A: Comments and Responses Matrix

| Letter/ Comment Number | Comment | Response |
|---|---|---|
| | recently adopted the 2018 PM2.5 Plan for meeting federal PM2.5 standards in the San Joaquin Valley, and which relies on significant new emissions reductions from HHD Trucks. These reductions include those achieved through the implementation of the California Air Resources Board (CARB) Statewide Truck and Bus Regulation, which requires truck fleets operating in California to meet the 2010 0.2 g/bhp-hr NOx standard by 2023. Additionally, to meet the federal air quality standards by the 2020 to 2024 attainment deadlines, the Plan relies on a significant and immediate transition of heavy duty truck fleets to zero or near-zero emissions technologies, including the near-zero truck standard of 0.02 g/bhp-hr NOx established by the California Air Resources Board.<br>To reduce impacts from future development projects with related operational emissions and activities that result in significant impacts on air quality, the District recommends the proposed mitigation measure Air-2.2 be modified to include language:<br>● Requiring operational fleets to utilize the cleanest available HHD truck technologies, including zero and near-zero (0.02 g/bhp-hr NOx) technologies as feasible,<br>● Requiring all on-site service equipment (cargo handling, yard hostlers, forklifts, pallet jacks, etc.) from development projects (such as distribution centers, warehouse, etc.) to utilize zero-emissions technologies as feasible, and<br>● Requiring fleets associated with future development projects to implement best practices (i.e. eliminating unnecessary idling).<br>For future development projects with operational emissions and activities that result in a less than significant impact on air quality, the District recommends the proposed mitigation measure Air-2.2 be modified to include language:<br>● Advising operational fleets to utilize the cleanest available HHD truck technologies, including zero and near-zero (0.02 g/bhp-hr NOx) technologies as feasible,<br>● Advising all on-site service equipment (cargo handling, yard hostlers, forklifts, pallet jacks, etc.) from development projects (such as distribution centers, warehouse, etc.) to utilize zero-emissions technologies as feasible, and<br>● Advising fleets associated with future development projects to implement best practices (i.e. eliminating unnecessary idling). | |

## Table 3.A: Comments and Responses Matrix

| Letter/ Comment Number | Comment | Response |
|---|---|---|
| B3-9 | C. Operational Related Emissions - Truck Routing<br>Truck routing involves the path/roads heavy-duty trucks take to and from their destination. The air emissions from heavy-duty trucks can impact residential communities and sensitive receptors.<br>The District recommends the General Plan include guidance supported by policy requiring future development projects to evaluate heavy-duty truck routing patterns to help limit emission exposure to residential communities and sensitive receptors. More specifically, this measure would require study of current truck routes, in consideration of the number and type of each vehicle, destination/origin of each vehicular trip, time of day/week analysis, vehicle miles traveled and emissions. The truck routing study would also identify alternative truck routes and their impacts on VMT, GHG emissions, and air quality.<br>Additionally, as related information, the City has committed to working with the District to commission a heavy duty truck rerouting study for the community in the adopted CERP for South Central Fresno. The District recommends that this study be discussed in the General Plan as appropriate, and look forward to working with the City to move forward with this project, including identifying co-funding opportunities to ensure maximum leveraging of funding. | This comment recommends revisions to the approved General Plan that include guidance and policy for heavy-duty truck routing pattern analysis. As previously noted, revisions to the approved General Plan at this time are limited to specific changes related to VMT and compliance with recent legislative updates. Truck routing patterns and associated emissions would be evaluated consistent with the operational analysis requirements of Mitigation Measure AIR-2.2. Projects would also be subject to the City's updated guidance on VMT analysis as well. Implementation of the approved General Plan revisions and PEIR would not affect the City's ongoing work with the District to commission a heavy duty truck rerouting study. |
| B3-10 | D. Operational Related Emissions – Under-fired Charbroilers<br>Future development projects for restaurants with under-fired charbroilers may pose the potential for immediate health risk, particularly when located in densely developed locations near sensitive receptors. Since the cooking of meat can release carcinogenic PM2.5 species like polycyclic aromatic hydrocarbons, controlling emissions from new under-fired charbroilers will have a substantial positive impact on public health.<br>Charbroiling emissions often occur in populated areas, near schools and residential neighborhoods, resulting in high exposure levels for sensitive Valley residents. The air quality impacts on neighborhoods near restaurants with under-fired charbroilers can be significant on days when meteorological conditions are stable, when dispersion is limited and emissions are trapped near the surface within the surrounding neighborhoods. This potential for neighborhood-level concentration of emissions during evening or multi-day stagnation events raises environmental concerns.<br>Furthermore, reducing commercial charbroiling emissions is essential to achieving attainment of multiple federal PM2.5 standards and associated health benefits in the Valley. Therefore, the District recommends that the General Plan include a measure | This comment warns of the immediate health risk associated with under-fire char broilers and recommends changes to the approved General Plan to include measures related to installation of control systems for new restaurants with under-fired char broilers. The changes to the approved General Plan at this time are limited to specific compliance with State legislative updates. However, all development proposals that contain under-fired char broilers will be evaluated for consistency with SJVPACD Rule 4692 for commercial charbroiling and will be evaluated for potential health effects during the discretionary review process. No changes to the Draft PEIR or approved General Plan are required. |

## Table 3.A: Comments and Responses Matrix

| Letter/ Comment Number | Comment | Response |
|---|---|---|
| | requiring the assessment and potential installation, as technologically feasible, of particulate matter emission control systems for new large restaurants operating under-fired charbroilers. The District is available to assist the City and project proponents with this assessment. Additionally, to ease the financial burden for Valley businesses, the District is currently offering substantial incentive funding that covers the full cost of purchasing, installing, and maintaining the system for up to two years. Please contact the District at (559) 230-5800 or technology@valleyair.org for more information. | |
| B3-11 | E. Voluntary Emission Reduction Agreement<br>Per the Draft PEIR, the City recognizes that a Voluntary Emission Reduction Agreement (VERA) is a method available for projects to mitigate significant criteria pollutant impacts. The District supports the City's acknowledgment that a VERA should be considered for projects with significant air impacts.<br>A VERA is a mitigation measure by which the project applicant provides pound-for-pound mitigation of emissions increases through a process that develops, funds, and implements emission reduction projects, with the District serving a role of administrator of the emissions reduction projects and verifier of the successful mitigation effort. To implement a VERA, the project applicant and the District enter into a contractual agreement in which the project applicant agrees to mitigate Project specific emissions by providing funds for the District's incentives programs. The funds are disbursed by the District in the form of grants for projects that achieve emission reductions. Thus, project-specific regional impacts on air quality can be fully mitigated. Types of emission reduction projects that have been funded in the past include replacement of old heavy-duty trucks with new, cleaner, heavy-duty trucks, electrification of stationary internal combustion engines (such as agricultural irrigation pumps), and replacement of older school buses.<br>In implementing a VERA, the District verifies the actual emission reductions that have been achieved as a result of completed grant contracts, monitors the emission reduction projects, and ensures the enforceability of achieved reductions. After the project is mitigated, the District certifies to the Lead Agency that the mitigation is completed, providing the Lead Agency with an enforceable mitigation measure demonstrating that project-specific regional emissions have been mitigated to less than significant. To assist the Lead Agency and project applicant in ensuring that the environmental document is compliant with CEQA, the District recommends the Draft PEIR includes an assessment of | The commenter concurs that a Voluntary Emission Reduction Agreement (VERA) is a method available for mitigating criteria pollutant impacts. This comment provides additional information on implementation of a VERA agreement, which is noted. No additional response is required. |

## Table 3.A: Comments and Responses Matrix

| Letter/ Comment Number | Comment | Response |
|---|---|---|
| | the feasibility of implementing a VERA.<br>Additional information on implementing a VERA can be obtained by contacting District CEQA staff at by email at CEQA@valleyair.org or by phone at (559) 230-6000. | |
| B3-12 | F. Allowed Uses Not Requiring Project-Specific Discretionary Approval<br>In some cases, for future development projects, the City may determine that a proposed project be approved as an allowed use not requiring a project-specific discretionary approval from the City. The District recommends the General Plan include language supported by policy requiring such projects to prepare a technical assessment in consultation with the District, and recommending that a VERA be considered for development projects determined to have a significant impact on air quality. For example, this requirement would apply to large development projects (i.e. large residential project, large distribution center, large warehouse, etc.) that would have the potential to significantly impact air quality and is determined by the City to be allowed by use, not requiring a project specific discretionary approval from the City.<br>Furthermore, to strengthen City policies for allowed uses, the District recommends that only future development projects resulting in a less than significant impact for all District CEQA applicable thresholds be eligible for an allowed use approval. Projects exceeding any District CEQA significance thresholds should be required to receive a discretionary approval from the City. | This comment suggests modifications to the approved General Plan to require consultation with the District and consideration of VERA agreements for significant projects. The commenter stipulates that for future development projects, the City may determine that a proposed project would be approved as an allowed use not requiring a project-specific discretionary approval from the City. It should be noted however, that projects deemed consistent with the approved General Plan would be subject to the PEIR Mitigation and Monitoring and Reporting Program (MMRP) which includes Mitigation Measure AIR-2.2. Mitigation Measure AIR-2.2 requires the preparation of an operational air quality assessment. It is not anticipated that any large development projects would be approved without discretionary approval. |
| B3-13 | G. Health Risk Screening/Assessment<br>A Health Risk Screening/Assessment identifies potential Toxic Air Contaminants (TAC's) impact on surrounding sensitive receptors such as hospitals, daycare centers, schools, work-sites, and residences. TAC's are air pollutants identified by the Office of Environmental Health Hazard Assessment/California Air Resources Board (OEHHA/CARB) (https://www.arb.ca.gov/toxics/healthval/healthval.htm) that pose a present or potential hazard to human health. A common source of TACs can be attributed to diesel exhaust emitted from both mobile and stationary sources.<br>The District recommends the future development projects be evaluated for potential health impacts to surrounding receptors (on-site and off-site) resulting from operational and multi-year construction TAC emissions.<br>i) The District recommends conducting a screening analysis that includes all sources of emissions. A screening analysis is used to identify projects which may have a significant | This comment recommends that future development projects be evaluated for potential health impacts to surrounding receptors. Mitigation Measure AIR-3.1 and Mitigation Measure AIR-3.2 require the preparation of a HRA consistent with the current guidance of the State Office of Environmental Health Hazard Assessment (OEHHA) and the SJVAPCD. Mitigation measures would be required to reduce risk impacts to an acceptable level. Additionally, as listed in Section 4.2.7.1 in the Draft PEIR, the approved General Plan includes policies with provisions for reducing exposure to sensitive receptors to toxic air contaminants. The District reporting requirements as outlined in this comment are noted. |

## Table 3.A: Comments and Responses Matrix

| Letter/ Comment Number | Comment | Response |
|---|---|---|
| | health impact. A prioritization, using the latest approved California Air Pollution Control Officer's Association (CAPCOA) methodology, is the recommended screening method. A prioritization score of 10 or greater is considered to be significant and a refined Health Risk Assessment (HRA) should be performed.<br>For your convenience, the District's prioritization calculator can be found at:<br>http:www.valleyair.org/busind/pto/emission_factors/Criteria/Toxics/Utilities/PRIORITIZATION%20RMR%202016.XLS.<br>ii) The District recommends a refined HRA for future development projects that result in a prioritization score of 10 or greater. Prior to performing an HRA, it is recommended that the future development project applicants contact the District to review the proposed modeling protocol. A future development project would be considered to have a significant health risk if the HRA demonstrates that the project related health impacts would exceed the Districts significance threshold of 20 in a million for carcinogenic risk and 1.0 for the Acute and Chronic Hazard Indices, and would trigger all feasible mitigation measures. The District recommends that future development projects that result in a significant health risk not be approved.<br>For HRA submittals, please provide the following information electronically to the District for review:<br>● HRA AERMOD model files<br>● HARP2 files<br>● Summary of emissions source locations, emissions rates, and emission factor calculations and methodology.<br>More information on toxic emission factors, prioritizations and HRAs can be obtained by:<br>● E-Mailing inquiries to: hramodeler@valleyair.org; or<br>● Contacting the District by phone for assistance at (559) 230-6000; or<br>● Visiting the Districts website (Modeling Guidance) at: http://www.valleyair.org/busind/pto/Tox_Resources/AirQualityMonitoring.htm. | |

## Table 3.A: Comments and Responses Matrix

| Letter/ Comment Number | Comment | Response |
|---|---|---|
| B3-14 | H. Ambient Air Quality Analysis<br>An ambient air quality analysis (AAQA) uses air dispersion modeling to determine if emissions increases from a project will cause or contribute to a violation of the ambient air quality standards. The District recommends that an AAQA be performed for the project if emissions exceed 100 pounds per day of any pollutant.<br>If an AAQA is performed, the analysis should include emissions from both project specific permitted and non-permitted equipment and activities. The District recommends consultation with District staff to determine the appropriate model and input data to use in the analysis.<br>Specific information for assessing significance, including screening tools and modeling guidance is available online at the District's website www.valleyair.org/ceqa. | The commenter is recommending an ambient air quality analysis (AAQA) using a dispersion model for projects that exceed 100 pounds per day of any pollutant. As stated on page 4.3-51 of the Draft PEIR, the scale of individual project level emissions that would result under the continued implementation of the approved General Plan has not been determined as such plans are not yet available. Mitigation Measure AIR-2.2 would require an evaluation of air quality impacts consistent with SJVAPCD methodology, including any requirement for an AAQA evaluation. |
| B3-15 | I. Nuisance Odors<br>Future development projects should be evaluated to determine the likelihood that the project would result in nuisance odors. Nuisance odors may be assessed qualitatively taking into consideration project design elements and proximity to off-site receptors that potentially would be exposed to objectionable odors. The intensity of an odor source's operations and its proximity to sensitive receptors influences the potential significance of odor emissions. Any project with the potential to frequently expose members of the public to objectionable odors should be deemed to have a significant impact and should be required to implement all feasible mitigation measures. | This comment suggests that all future development projects be evaluated to determine the likelihood that he project would result in nuisance odors. Odors in the City are discussed on pages 4.3-62 and 4.3-63 of the Draft PEIR. Mitigation Measure AIR-4.1 would require project developers with the potential to generate odor impacts in consultation with the SJVAPCD, to prepare an odor impact assessment and implement any odor control measures recommended by the SJVAPCD or the City as needed to reduce the impact to a level deemed acceptable by the SJVAPCD. |
| B3-16 | J. District Rule 9510 (Indirect Source Review)<br>The purpose of District Rule 9510 is to reduce the growth in both NOx and PM10 emissions associated with development and transportation projects from mobile and area sources associated with construction and operation of development projects. The rule encourages clean air design elements to be incorporated into development projects. In case the proposed development project clean air design elements are insufficient to meet the targeted emission reductions, the rule requires developers to pay a fee used to fund projects to achieve off-site emissions reductions.<br>Accordingly, future development project(s) within the Project would be subject to District Rule 9510 if:<br>(1) Upon full build-out, the project would receive a project-level discretionary approval from a public agency and would equal or exceed any one of the following applicability | This comment provides information related to the District's Rule 9510 (Indirect Source Rule). Rule 9510 is indicated in the Draft PEIR (pages 4.3-25, 4.3-47, 4.3-49, and 4.3-54) as an applicable law and regulation related to implementation of the approved General Plan. The information provided in this comment is noted. No additional response is required. |

## Table 3.A: Comments and Responses Matrix

| Letter/ Comment Number | Comment | Response |
|---|---|---|
| | thresholds:<br>● 50 dwelling units<br>● 2,000 square feet of commercial space;<br>● 25,000 square feet of light industrial space;<br>● 100,000 square feet of heavy industrial space;<br>● 20,000 square feet of medical office space;<br>● 39,000 square feet of general office space; or<br>● 9,000 square feet of educational space; or<br>● 10,000 square feet of government space; or<br>● 20,000 square feet of recreational space; or<br>● 9,000 square feet of space not identified above<br>(2) Or would equal or exceed any of the applicability thresholds in section 2.2 of the rule.<br>District Rule 9510 also applies to any transportation or transit development projects where construction exhaust emissions equal or exceed two (2.0) tons of NOx or two (2.0) tons of PM10.<br>In the case the future development project(s) are subject to District Rule 9510, an Air Impact Assessment (AIA) application is required and the District recommends that demonstration of compliance with District Rule 9510, before issuance of the first building permit, be made a condition of Project approval.<br>Information about how to comply with District Rule 9510 can be found online at:<br>http://www.valleyair.org/ISR/ISRHome.htm.<br>The AIA application form can be found online at:<br>http://www.valleyair.org/ISR/ISRFormsAndApplications.htm.<br>District staff is available to provide assistance with determining if future development projects will be subject to Rule 9510, and can be reached by phone at (559) 230-6000 or by email at ISR@valleyair.org. | |

## Table 3.A: Comments and Responses Matrix

| Letter/ Comment Number | Comment | Response |
|---|---|---|
| B3-17 | K. District Rule 9410 (Employer Based Trip Reduction)<br>Future development projects may be subject to District Rule 9410 (Employer Based Trip Reduction) if the Project would result in employment of 100 or more "eligible" employees. District Rule 9410 requires employers with 100 or more "eligible" employees at a worksite to establish an Employer Trip Reduction Implementation Plan (eTRIP) that encourages employees to reduce single-occupancy vehicle trips, thus reducing pollutant emissions associated with work commutes. Under an eTRIP plan, employers have the flexibility to select the options that work best for their worksites and their employees.<br>Information about how District Rule 9410 can be found online at: http://www.valleyair.org/Programs/Rule9410TripReduction/eTRIP_main.htm.<br>For additional information, you can contact the District by phone at 559-230-6000 or by e-mail at etrip@valleyair.org. | This comment provides information related to the District's Rule 9410 (Employer Based Trip Reduction). This rule is discussed in the Draft PEIR (pages 4.3-25 and 4.3-54) as an applicable law and regulation related to implementation of the approved General Plan. The information provided in this comment is noted. No additional response is required. |
| B3-18 | L. Air Quality Permitting: District Rules 2010 and 2201<br>Future development projects may be subject to District Rule 2010 (Permits Required) and Rule 2201 (New and Modified Stationary Source Review) and will require District permits. In general, facilities with equipment that may emit air pollution or is used for controlling air pollution are subject to permit requirements. Prior to construction, the future development project proponent should submit to the District an application for an Authority to Construct (ATC).<br>For further information or assistance, the project proponent can visit https://www.valleyair.org/busind/pto/ptoprocess.htm#who or contact the District's Small Business Assistance (SBA) Office at (559) 230-5888. | This comment provides information on District Rule 2010 (Permits Required) and Rule 2201 (New and Modified Stationary Source Review). Rule 2201 and permitting requirements of the District are discussed on pages 4.3-23 and 4.3-52 of the Draft PEIR. The Draft PEIR acknowledges that any new or modified stationary/industrial source would be required to provide emission controls and offsets. The further information provided in this comment is noted. |
| B3-19 | M. Other District Rules and Regulations<br>Future development projects may also be subject to the following District rules: Regulation VIII, (Fugitive PM10 Prohibitions), Rule 4102 (Nuisance), Rule 4601 (Architectural Coatings), and Rule 4641 (Cutback, Slow Cure, and Emulsified Asphalt, Paving and Maintenance Operations). In the event an existing building will be renovated, partially demolished or removed, the project may be subject to District Rule 4002 (National Emission Standards for Hazardous Air Pollutants).<br>The above list of rules is neither exhaustive nor exclusive. To identify other District rules or regulations that apply to future project or to obtain information about District permit requirements, project applicants are strongly encouraged to contact the District's Small | This comment states that future development projects may be subject to additional District rules. Recognizing the need for coordination and permitting requirements, the City has identified General Plan Policy RC-4-d: Forward Information which requires the City to forward information regarding proposed development proposals that require air quality evaluation to the SJVAPCD for review and identification of any permitting requirements, including those listed in this comment. |

## Table 3.A: Comments and Responses Matrix

| Letter/ Comment Number | Comment | Response |
|---|---|---|
| | Business Assistance Office at (559) 230-5888.<br>Current District rules can be found online at: www.valleyair.org/rules/1ruleslist.htm. | |
| B3-20 | If you have any questions or require further information, please contact Michael Corder by e-mail at Michael.Corder@valleyair.org or by phone at (559) 230-5818. | This comment provide a closing to the comment letter and does not address the adequacy or completed of the Draft PEIR. No further response is necessary. |
| **B4** | **Fresno Irrigation District (May 6, 2020)** | |
| B4-1 | The Fresno Irrigation District (FID) has reviewed the Draft Program Environmental Impact Report (PEIR) for the City of Fresno. The project location is the Planning Area of the City of Fresno. To be in conformance with State law and consistent with recent legislative changes, the City is updating the 2014 adopted Fresno General Plan and certified Master Environmental Impact Report (MEIR). This update is to provide consistency with Section 15168 of the CEQA Guidelines. We appreciate the opportunity to review and comment on the subject documents for the proposed Plan. The proposed Plan is a significant development and requires thorough and careful consideration of all the potential impacts. Our comments are as follows: | This comment provides an introduction to the comment letter and briefly summarizes the commenter's understanding of the proposed project. This comment does not address the adequacy or completeness of the Draft PEIR; does not raise environmental issues; and does not request the incorporation of additional information relevant to environmental issues. Such comments do not require a response, pursuant to Section 15088(a) of the State CEQA Guidelines. No further response is necessary. |
| B4-2 | 1. FID previously reviewed and commented on the subject project on May 29, 2019 as Notice of Preparation of a Program Environmental Impact Report, an Update to the Master Environmental Impact Report for the City of Fresno General Plan. A copy of FID's previous comments have been attached for your reference. The comments and conditions still apply. It also appears that there may still be a water deficit within the project area by 2040. These impacts must be mitigated or considered as part of the your determination. | A discussion of groundwater supplies is provided on page 4.10-21 of the Hydrology and Water Quality section of the Draft PEIR, and projected water supplies are discussed on page 4.17-28 of the Utilities and Service Systems section of the Draft PEIR. As discussed, based on current population growth estimates, groundwater sustainability efforts, and expected water deliveries from sources identified in Table 4.17-1, water is expected to be available to accommodate growth identified in the approved General Plan in 2040. No further response is required. |
| B4-3 | Thank you for making available to us the City of Fresno's Draft Plan Environmental Impact Report for our review and allowing us the opportunity to provide comments. We appreciate the opportunity to review and comment on the subject documents for this project. While it is difficult to envision all of the potential impacts without all of the improvement details, we attempted to provide you as much information as possible. We reserve the right to provide additional comments when more detailed information becomes available. If you have any questions, please feel free to contact me at (559) 233-7161 extension 7103 or LKimura@fresnoirrigation.com. | This comment provide a closing to the comment letter and does not address the adequacy or completed of the Draft PEIR. No further response is necessary. |

## Table 3.A: Comments and Responses Matrix

| Letter/ Comment Number | Comment | Response |
|---|---|---|
| **Organizations and Interested Parties** | | |
| **C1** | **ODELL Planning & Research, Inc. (March 23, 2020)** | |
| C1-1 | Hi Sophia, I'm reviewing the Draft EIR for the General Plan Update, and I noticed there is a "Section 3.2.1.2" mentioned three times in the text that doesn't appear to be included in the Draft EIR. The references I'm referring to are on pages 3-5 and 3-6 (e.g. on page 3-5: "The specific text changes that are proposed are included below in Section 3.2.1.2"). The discussion of proposed changes appears to begin in Section 3.2.2, so I'm thinking there may have been a change in the numbering scheme (or just a typo) rather than an omission of text from the Draft EIR, but I wanted to check with you to confirm that was the case.<br>(Note – Here is the link I am using to view the Draft EIR: https://www.fresno.gov/darm/wp-content/uploads/sites/10/2020/03/Fresno-GP-Public-Review-Draft-Program-EIR.pdf) | The comment asks whether references to a section of the Project Description are correct. The commenter identifies a typographical error that is repeated in three places on page 3.5 and page 3.6. The following text in the first paragraph in Section 3.2 on page 3-5 has been amended as follows:<br>The specific text changes that are proposed are included below in Section 3.2.~~1.~~2.<br>The following text in the second sentence in Section 3.2.1 on page 3-6 has been amended as follows:<br>As discussed above, the current General Plan will remain in-effect, aside from the proposed changes identified in Section 3.2.~~1.~~2, below.<br>The following text in the Mobility and Transportation Element bullet in Section 3.2.1.1 on page 3-6 has been amended as follows:<br>As a part of the PEIR update, and discussed below in Section 3.2.~~1.~~2, the project proposes changes to this element.<br>Text revisions indicated above provide a correction in response to the comment and do not constitute significant new information that would require recirculation of the Draft PEIR. |
| **C2** | **Central Valley Air Quality Coalition (May 4, 2020)** | |
| C2-1 | Please accept these comments regarding the air quality component of the city of Fresno's General Plan Program Environmental Impact Report (PEIR), submitted on behalf of the Central Valley Air Quality (CVAQ) Coalition. CVAQ is a coalition of more than 70 public health, environmental, civil rights, and environmental justice organizations advocating for clean air in the San Joaquin Valley. Given the serious public health impacts of our severe regional and local air pollution issues, CVAQ recommends that the PEIR align assessment of individual projects with other ongoing planning processes and include more stringent local thresholds, with particular attention to parts of the city significantly impacted by air pollution.<br>Fresno is among the top five most polluted cities in the nation in terms of ozone | This comment provides background information on air quality and identifies Fresno's South Central Specific Plan (SCSP) and the Community Emission Reduction Plan (CERP) as on-going planning efforts. The commenter states that the City should align the Draft PEIR thresholds with these two plans. The City recognizes the interrelation of the concurrent planning processes; however, the Draft PEIR addresses air quality as it relates to the CEQA Guidelines and is not a project-level assessment or location specific. |

## Table 3.A: Comments and Responses Matrix

| Letter/ Comment Number | Comment | Response |
|---|---|---|
| | pollution, short term particle pollution, and year-round particle pollution. These pollutants greatly impact Fresno residents by contributing to severe health issues such as asthma, heart attacks, and strokes. Assessment of individual projects and more stringent local thresholds will lead to decreased pollution exposure for Fresno residents, particularly those who are located in overburdened communities and endure higher exposure rates plus experience more social vulnerabilities such as the lack of access to affordable health care and housing.<br><br>Fresno is undergoing several processes that require special attention to reducing emissions and exposure, namely the South Central Specific Plan (SCSP) and the Community Emission Reduction Plan (CERP) for the area of south central Fresno selected under Assembly Bill (AB) 617. These planning processes look toward providing relief to Fresno's overburdened communities. We believe the City of Fresno should align the PEIR thresholds with these two processes in order to meet the emissions reduction targets outlined. Additionally, aligning with these processes will create consistency and uniformity throughout the city's planning processes. | |
| C2-2 | Furthermore, we do not believe that significant emissions reductions can be accomplished without including more stringent thresholds, as several of the Air Quality Significance Thresholds established by the San Joaquin Valley Air Pollution Control District (SJVAPCD) are weak and do not align with the goals in the SCSP and Fresno CERP. Compared to other agencies, such as the South Coast Air Quality Management District (SCAQMD) and the Bay Area Air Quality Management District (BAAQMD), SJVAPCD falls short in the following:<br><br>● Higher thresholds for fine particulate pollution. The SJVAPCD currently has a threshold of 15 tons per year (tpy) as opposed to SCAQMD and BAAQMD who set thresholds of 10 tpy. This threshold is particularly significant as fine particulate matter is an extremely dangerous pollutant that can "increase the risk of heart disease, lung cancer and asthma attacks and can interfere with the growth and work of the lungs." Setting a more stringent threshold for this pollutant will significantly contribute to the health and well-being of Fresno residents, particularly in heavily impacted neighborhoods like south central Fresno.<br><br>● Lower Hazardous Pollutant Emissions. The current threshold is based on potential to increase cancer risk for the person with maximum exposure potential by 20 in a million and Non-cancer Hazard Index > 1. SCAQMD and BAAQMD both have an | This comment suggests that more stringent thresholds should be established than those identified by the SJVAPCD and used in the analysis included in the Draft PEIR. The City acknowledges that other jurisdictions have established different thresholds; however, the city is located within the San Joaquin Valley Air Basin and therefore, the thresholds established by the SJVAPCD are applicable to the proposed project. The SJVAPCD has made a determination, consistent with the stipulations under CCR §15064.7 that the identified thresholds are an appropriate and effective means of promoting consistency in significance determinations within the environmental review process. As required under the Clean Air Act requirements, the SJVAPCD has adopted attainment plans that demonstrate how the District will attain and maintain the National Ambient Air Quality Standards. These plans are developed through a public process, formally adopted by the State, and submitted by the Governor's designee to the US EPA. The Clean Air Act requires EPA to review each plan and any plan revisions and to approve the plan or plan revisions if consistent with the Clean Air Act. The SJVAPCD has used this planning process as the basis for air quality thresholds of |

## Table 3.A: Comments and Responses Matrix

| Letter/ Comment Number | Comment | Response |
|---|---|---|
| | exposure potential of 10 in a million. Both of these agencies also go beyond what SJVAPCD has done to reduce the exposure hazardous pollutants with SCAQMD including limit of "Cancer Burden > 0.5 excess cancer cases (in areas ≥ 1 in 1 million) Chronic & Acute Hazard Index ≥ 1.0 (project increment)." As for BAAQMD, they have included further limits of " Increased non-cancer risk of > 1.0 Hazard Index (Chronic or Acute); Ambient PM2.5 increase: > 0.3 µg/m3 annual average; Zone of Influence: 1,000-foot radius from property line of source or receptor" | significance. The SJVAPCD has determined that the established thresholds can be characterized in terms of their impact on the Districts ability to reach attainment.[1] The commenter suggests other thresholds for both fine particulate and hazardous pollutant emissions. The City's use of the SJVAPCD's threshold for CEQA are based on the guidance and substantial evidence provided in the documentation provided by the SJVAPCD for the recognized thresholds. The necessary documentation and support for alternative thresholds has not been established. |
| C2-3 | As Fresno looks to address air pollution and its impacts to public health and quality of life, this PEIR will play an important role. In order to meet various emissions reductions goals and to improve the health and wellbeing of Fresno residents, the PEIR will need to adopt an assessment of individual projects that aligns with ongoing processes and includes more stringent local thresholds to protect and provide immediate relief to Fresno's overburdened communities.<br>Please do not hesitate to contact us if you need further information or have any questions. | The City of Fresno will continue to the planning efforts related to the SCSP and the CERP plans. The Draft PEIR is programmatic in nature and does not evaluate specific development projects that could be approved under the approved General Plan. Mitigation Measures included in the Draft PEIR will require a project-specific construction and operational air quality evaluation. Measures will also require an evaluation of health effects resulting from projects and the siting of sensitive receptors, which is consistent with the goals of the on-going air quality planning efforts in the city. Location and land use specific mitigation measures will be identified through implementation of the EIR prepared for the SCSP. |
| **C3** | **Leadership Counsel for Justice and Accountability (May 5, 2020)** | |
| C3-1 | Thank you for the opportunity to submit comments on the City of Fresno's Draft Programmatic Environmental Impact Report ("DPEIR") for the City's 2035 General Plan. These comments aim to assist the City in its preparation of a Final PEIR that protects and advances environmental quality, public health, and human well-being in disadvantaged communities located within the Planning Area and at large and that complies with the text and spirit of the California Environmental Quality Act (Pub. Res. Code § 2100, et seq), fair housing and civil rights laws (e.g., Gov. Code §§ 12900, et. seq., 11135, 65008, 8899.50; 42 U.S.C. § 2000d, et seq., 3601, et seq., 5304(b)(2)&(s)(7B), & 12075), and other applicable law.<br>As drafted, the DPEIR is fundamentally inconsistent with CEQA's requirement that an EIR | This comment provides an introduction to the comment letter and identifies issues of concern in generalities to be elaborated upon within the following comments. No additional response is required. |

[1] SJVAPCD, 2015. Guide for Assessing and Mitigating Air Quality Impacts. March. Website: http://www.valleyair.org/transportation/GAMAQI_12-26-19.pdf

## Table 3.A: Comments and Responses Matrix

| Letter/ Comment Number | Comment | Response |
|---|---|---|
| | fully and accurately inform decision-makers and the public of the environmental consequences of proposed actions and identify all feasible mitigation measures to minimize those impacts. See Pub. Res. Code §§ 21002, 21002.2., 21061; 14 C.C.R. § 15364. To start, the DPEIR dramatically understates the project's impacts by defining the project as "continued implementation of the General Plan" and using the inapplicable baseline year of 2019 instead of the correct baseline year of 2012. As a result, the DPEIR unlawfully ignores the environmental impacts of five years of General Plan implementation from its calculations. With respect to the DPEIR's substantive analysis, the DPEIR fails to disclose, analyze, and propose feasible and effective mitigation measures to minimize the project's potentially significant environmental impacts related to aesthetics, air quality, water supply, land use, traffic, displacement of people and housing, and public health, among others. These deficiencies include failures by the DPEIR to acknowledge and mitigate General Plan impacts which uniquely and/or most acutely burden lower-income communities of color and communities with high proportions of residents who speak languages other than English compared to the Planning Area as a whole. The DPEIR's deficient impact analysis and failure to identify adequate mitigation measures to address impacts disproportionately harms these communities which are the most vulnerable to the project's impacts. Thus, the DMEIR not only violates CEQA but results in violations of state and federal fair housing and civil rights laws which require the City to both avoid discrimination and to affirmatively further fair housing.<br><br>The City must revise and recirculate the DMEIR to provide the public with an accurate assessment of the environmental issues at stake and mitigation measures that fully address the Project's significant impacts. The revised DMEIR must also thoroughly consider and identify mitigation measures to address the project's substantial adverse effects on human beings. Pub. Res. Code § 21083(b); 14 C.C.R. § 15065. The City must also describe and evaluate alternatives to the project that eliminate or reduce the project's significant environmental effects, including disproportionate impacts on disadvantaged communities. Pub. Res. Code § 21002, 21002.1(a), 21100(b)(4);14 C.C.R. § 15126.6(a). | |
| C3-2 | I. The DPEIR's Failure to Disclose and Adopt Feasible Mitigation Measures to Address the Impacts Associated with the General Plan's Designation of Entire South Fresno Neighborhoods for Industrial Development<br><br>These comments include a particular focus on the impacts of the General Plan's land use | The Draft PEIR represents an update to all changes to the City's Land Use Map and General Plan amendments that have occurred since adoption of the approved General Plan. These discretionary projects have already been evaluated under CEQA as applicable. The |

## Table 3.A: Comments and Responses Matrix

| Letter/ Comment Number | Comment | Response |
|---|---|---|
| | designation and policies that allow, facilitate, and promote heavy industrial and warehouse development in and around disadvantaged South Fresno communities. The General Plan designates approximately 6,150 acres of land for heavy industrial development in an area which the General Plan calls the South Industrial Priority Area ("SIPA"). See General Plan, Figure IM- 1, Priority Areas for Development Incentives, 12-26; City of Fresno South Industrial Priority Area (SIPA) Specific Plan, p. 72. This includes approximately 772 acres of land within City limits, 1,053 acres outside of City limits and within the City's current sphere of influence ("SOI"), and 1,208 acres of land outside of the SOI which the City identifies as "undeveloped". The land designated within the SIPA for heavy industrial development, as well as in other areas of the City including the Jane Addams and Roeding Park neighborhoods, surrounds and includes entire residential neighborhoods and communities, as well as individuals homes, places of worship, neighborhood markets, and other community-serving businesses and amenities. As discussed in more detail in this letter below, the communities and neighborhoods which the General Plan designates for industrial development comprise some of the most pollution-burdened neighborhoods in Fresno and the entire state and are disproportionately comprised of people of color, immigrants, and people with limited English language abilities and/or whose first language is a language other than English.<br><br>The introduction of thousands of acres of new industrial development into these communities, including where neighborhoods and homes currently exist, as anticipated by the General Plan will result in – and has already resulted in – severe short and long-term impacts on environmental quality, public health and well-being in Fresno's most vulnerable neighborhoods. Yet from our review, the DPEIR fails to acknowledge or analyze the environmental and human impacts of the General Plan's designation of South Fresno neighborhoods for heavy industrial development and its goals and policies aimed at facilitating and expediting this development. The DPEIR also fails to identify enforceable mitigation measures which would address the particular significant impacts that arise as a result of these land use designations and policies. Our comments below discuss these omissions. In order to comply with CEQA and fair housing and civil rights laws, the City must revise the DPEIR to fully disclose and analyze the impacts of the General Plan's industrial development land use designations and policies and identify robust and enforceable mitigation measures and alternatives that minimize, and wherever possible, avoid, these impacts.<br><br>While numerous mitigation measures are available to the City to reduce and avoid | Southwest Fresno Specific Plan, which proposed changes to land uses and zoning requirements in Southwest Fresno would not be superseded and is not being re-designated as part of the proposed project. In addition, the South Industrial Priority Area (SIPA) Specific Plan, currently being prepared, would include an analysis of potential environmental impacts and mitigation measures related to that area of South Fresno.<br><br>The mitigation measures included in the Draft PEIR are program-level mitigation measures that are intended to address potential environ-mental impacts related to the implementation of the approved General Plan. Specific project-level impacts would be analyzed when proposed, and would follow the prescriptive mitigation measures included in the Draft PEIR and for any applicable Specific Plan EIRs. Please refer to Master Response: Project Description and Baseline Conditions for more information. |

## Table 3.A: Comments and Responses Matrix

| Letter/ Comment Number | Comment | Response |
|---|---|---|
| | impacts associated with its industrial development policies for all impact categories, the enactment of buffers between residential neighborhoods and industrial development through the re-designation of land from industrial to less intensive and community-serving land uses (e.g., grocery stores, retail and commercial centers, parks and green space, and health clinics) would reduce project impacts in all impact categories. Land use re-designation is an effective and feasible mitigation measure that falls clearly within the City's land use authorities. For your convenience, we have attached to this letter a copy of proposed land use map that we previously submitted to the City that reflects alternative land use designations in the SIPA which would reduce environmental impacts on sensitive land uses in the area. The land use map was developed in consultation with residents from impacted communities and neighborhoods in Southwest Fresno (the community located at Roy and Almy Avenues), South Central Fresno (the communities located along East Central Avenue between Orange and Cedar Avenues and on Malaga Avenue and the community of Daleville), Calwa, and Malaga. Attachment 1. Note that the land use designations abbreviations reflected in the map are the same land use designations used in the General Plan. | |
| C3-3 | II. The DPEIR's Mitigation Measures Fail to Comply with CEQA<br>A. The DPEIR Inappropriately Defers Mitigation, Identifies Unenforceable and Ineffective Measures, and Fails to Assess Feasible & Effective Measures The DPEIR Ignores Feasible Mitigation Measures, Including the Adoption of Alternative Land Use Designations<br>The DPEIR routinely fails to identify feasible and effective mitigation measures for the project's potentially significant impacts in various impact categories and instead choses to identify mitigation measures which defer identification of specific mitigation to future projects that undergo CEQA review despite the fact that many projects that proceed with General Plan implementation will be subject to only ministerial review and not be subject to CEQA. In addition, the DPEIR identifies numerous mitigation measures which will not reduce the associated impact, because the measures are vague and/or not enforceable. In a number of cases, the DPEIR simply fails to identify any mitigation measure to address impacts identified in the analysis. And for several of the significant and unavoidable impacts identified by the DPEIR, the DPEIR concludes that no feasible mitigation is available or identifies mitigation measures that the DPEIR acknowledges will not reduce the impact to a less than significant level while ignoring other feasible mitigation measures that would substantially reduce the impact. | As discussed in response to Comment C3-2, and Master Response: Project Description and Baseline Conditions, the proposed project does not include land use changes to the City's General Plan. The discretionary action to be undertaken by the City is whether or not to adopt the changes to the Mobility and Transportation Element of the approved General Plan and approve updates to the GHG Reduction Plan. Although the Draft PEIR takes into account land use changes that have occurred since the MEIR was certified in 2014, all such project-related changes since 2014 have previously completed a CEQA analysis, where applicable.<br>With respect to the mitigation measures proposed in the Draft PEIR, as appropriate, the mitigation measures provide prescriptive measures that provide information on how future projects will address potential impacts as projects are proposed under the approved General Plan. Future discretionary projects would be evaluated under CEQA, as applicable and project-specific mitigation measures prescribed as necessary. |

## Table 3.A: Comments and Responses Matrix

| Letter/ Comment Number | Comment | Response |
|---|---|---|
| | Among other available mitigation measures, the DPEIR never considers changes to land use designations and intensities as potential mitigation measures even though such changes could significantly reduce a variety of significant impacts identified in the DPEIR, including but not limited to aesthetic, light, noise, air pollution, public health, traffic, and greenhouse gas emissions, among others. Similarly, the DPEIR does not consider changes to its Development Code which would reduce such impacts (see this letter's discussion of the DPEIR's analysis of project impacts on sensitive receptors for examples of Development Code amendments which would reduce air quality impacts and could be fashioned to reduce project impacts in other categories).<br><br>The City cannot approve projects with significant environmental impacts if any feasible mitigation measure or alternative is available that will substantially environmental effects of a project. Pub. Res. Code § 21002; CEQA Guidelines § 15126(a). The City is legally required to mitigate or avoid the significant impacts of the projects it approves wherever it is feasible to do so. Pub. Res. Code § 21002.1(b); Covington v. Great Basin Unified Air Pollution Control Dist. (2019) 43 Cal.App.5th 867, 879. A feasible mitigation measure is one that is capable of being accomplished in a successful manner within a reasonable period of time, taking into account economic, environmental, social, legal, and technological factors. Pub. Res. Code § 21061.1; CEQA Guidelines § 15364; Covington (2019) 43 Cal.App.5th at 878.<br><br>Mitigation measures may be incorporated into any plan, policy, regulation, or project and include measures which minimize impacts by limiting the degree or magnitude of the action and its implementation. § 15126.4(a)(2); CEQA Guidelines § 15370(b). Mitigation measures should include changes in where development is planned, what kind is planned, and how dense or intense that development is planned to be, including through changes to the General Plan Land Use Diagram and Development Code standards for the development under specific zone districts.<br><br>The DPEIR explicitly states that no changes to General Plan land use designations or intensities are proposed. Neither does the DPEIR propose or consider any changes to the Development Code to lessen the severity of the impacts of new industrial development, including on vulnerable disadvantaged communities and sensitive receptors. | |

## Table 3.A: Comments and Responses Matrix

| Letter/ Comment Number | Comment | Response |
|---|---|---|
| C3-4 | III. The Project Description Inaccurately Limits the Project's Scope to "Continued Implementation of the General Plan" and Fails to Include the Citywide Development Code<br><br>An accurate, stable and finite project description is the sine qua non of an informative and legally sufficient EIR. County of Inyo v. City of Los Angeles (1977) 71 Ca.3d 185, 192. An EIR's project description must contain sufficient specific information about the project to allow the public and reviewing agencies to evaluate and review its environmental impacts. The description cannot narrow the scope of environmental review or minimize the project's impacts on the environment. Dry Creek Citizens Coalition v. County of Tulare (1999) 70 Cal.App.4th 20, 26 & 36; Santiago County Water Dist. v. County of Orange (1981) 117 CA3d 818, 829. Numerous courts have affirmed the central importance of the project description to an adequate EIR. See e.g., Washoe Meadows Community v. Department of Parks & Recreation (2017) 17 CA5th 277, 287.<br><br>The DPEIR fails to satisfy CEQA's requirements regarding project descriptions, because the project description inaccurately describes the "project". Section 3.2, "Project Characteristics," contained within Section 3.0, "Project Description," provides the following description of the project:<br><br>"The intent of the project is to update the text of the General Plan in order to reflect changes in applicable statutes and regulations related to Vehicle Miles Traveled (VMT), as well as updating the EIR to include a current baseline for the continued implementation of the General Plan, and reflect changes in City planning documents since adoption of the General Plan in 2014. The project also includes an update to the City's Greenhouse Gas Reduction Plan. In doing so, the City is converting the previously-certified MEIR to a PEIR with the goal of extending the life of the environmental document for the General Plan, pursuant to State CEQA Guidelines Section 15179 (Limitations on the Use of Master EIRs)." (3-5)<br><br>Contrary to this description, the City's conversion of the certified MEIR to a PEIR through the preparation and certification of the PEIR and the contents of the PEIR, including a 2019 baseline, is not a "project" in itself. See 14 C.C.R. § 15378. The term "project" refers to the proposed activity that requires approval by a public agency. C.C.R. § 15378(c). An EIR in itself is not a discretionary project triggering that very same EIR under CEQA. Given the City's statement that it is "converting the previously-certified MEIR to a PEIR," the "project" is the same project which required approval at the time the MEIR was certified – the 2014 General Plan and the Development Code Update, along with the amendments | Please refer to Master Response: Project Description and Baseline Conditions. As discussed in the Master Response, because the land use plan for the City is not being amended, the only change related to the proposed project is related to the addition of a new General Plan policy related to the future adoption of VMT Thresholds and the modifications of existing General Plan policies, and update to the Greenhouse Gas Reduction Plan. None of these project features result in direct physical impacts. The "the whole of an action, which has a potential for resulting in either a direct physical change in the environment, or a reasonably foreseeable indirect physical change in the environment," does not include previous land use changes that have already been analyzed and approved under CEQA. As a result, the continued implementation of the approved General Plan would require program-level prescriptive mitigation measures to address potentially-significant environmental impacts if they were to occur on the project level for future projects.<br><br>The project is not amending the Development Code, and the environmental analysis that was conducted when the Development Code was adopted was adequate. The analysis included in the PEIR does not provide an analysis of development projects of Specific Plans that have already been certified. The Development Code is still in place and subsequent actions would require a CEQA determination. |

## Table 3.A: Comments and Responses Matrix

| Letter/ Comment Number | Comment | Response |
|---|---|---|
| | to the General Plan and Development Code approved since those documents' adoption and the proposed revisions to the General Plan Transportation and Mobility Element described in the DPEIR. The City is not proposing to take any action at this time to allow or prohibit the "continued implementation of the General Plan," and thus no project with such a description exists for the DPEIR to analyze.<br><br>The "Project Characteristics" description does not identify the 2014 General Plan as the project, or a component thereof. On the other hand, Section 3.2.1 briefly describes the existing General Plan and the DPEIR's Executive Summary states that:<br><br>"The purpose of this Draft PEIR is to inform public agency decision-makers, representatives of affected and responsible agencies, the public, and other interested parties of the potential environmental effects that may result from continued implementation of the approved General Plan." The DPEIR characterizes the project as the "continued implementation of the approved General Plan" on several other occasions. See e.g., p. 1-1, 1-2, 1-5. "'Project'" for purposes of CEQA "means the whole of an action, which has a potential for resulting in either a direct physical change in the environment, or a reasonably foreseeable indirect physical change in the environment." Id. 14 C.C.R. § 15378. A complete project description is necessary to ensure that the environmental impacts of the entire project are considered. City of Santee v. County of San Diego (1989) 214 CA3d 1438, 1454. When the agency's activity involves a regulation, as compared to building a physical structure, such as a road or power plant, "the whole of the activity constituting the "project" includes the enactment, implementation and enforcement of the regulation. POET, LLC v. State Air Resources Board (2017) 12 Cal.App.52, 57. Here, both the project components identified in Section 3.2 and the "continued implementation of the 2014 General Plan" are only a part of the whole action -- the 2014 General Plan, the Development Code, amendments to the 2014 General Plan since its adoption, proposed amendments to the General Plan Transportation and Mobility Element, including the enactment, implementation, and enforcement of those documents and provisions from start to finish. Since the DPEIR's two characterizations of the project both fail to account for the implementation of the 2014 General Plan and the Development Code from start to finish, the DPEIR fails to account for the whole of the action at issue as required. And repeal of the MEIR and adoption of the PEIR would leave the project of the 2014 General Plan and Development Code itself without certified environmental review for those projects.<br><br>Significantly, nowhere at all does the DPEIR identify the Development Code Update as a | |

## Table 3.A: Comments and Responses Matrix

| Letter/ Comment Number | Comment | Response |
|---|---|---|
| | component of the "project" nor does the DPEIR contain any description of the Development Code Update or any analysis of its environmental impacts. The Development Code, Chapter 15 of the City of Fresno's Municipal Code, is an approximately 570-page document that establishes the standards and administrative processes applicable to the approval and operation of all land uses within the City of Fresno city limits. While one of the purposes of the Development Code is to implement the General Plan, the Development Code was also adopted to achieve a series of 11 unique objectives, which are distinct from those set forth in the General Plan. Fresno Municipal Code ("FMC") § 15-102. The standards and processes set forth in the Code reflect thousands of discrete choices by the City of Fresno which are not dictated by the General Plan and which individually and collectively result in a significant impact on the environment.<br><br>For example, Part II: Base and Overlay Districts establishes the permit requirements for land uses within each of the City's zone districts, including which land uses may proceed by right with no further discretionary review and those which require discretionary approval pursuant to a Conditional Use Permit. The Development Code for instance allows any "General Industrial Use" and Wholesaling and Distribution to occur by right in Heavy Industrial zone districts. § 15-302, Table 15-302. The Development Code defines "General Industrial Use" to encompass a sweeping range of industrial land uses and uses encompassed by the General Industrial Use definition and Wholesaling and Distribution have known impacts on the environment and human health. Part II of the Development Code also establishes requirements for minimum setbacks of buildings from property lines, building height, and density limitations, among other things, all of which directly and indirectly impact the environment and surrounding properties in a myriad of ways. See e.g., § 15-304. As further examples, Article 25 of the Development Code sets performance standards for land uses which establish acceptable impacts, including but not limited to noise, vibration, light, glare, dust, odor impacts, on surrounding properties, and Part V of the Development Code establishes findings required regarding acceptable impacts on public health, safety, and property for the issuance of discretionary permits and conditions of approval which the planning director may impose to achieve Development Code objectives. See FMC, Ch. 15, Article 25; See e.g, §§ 15-5306 & 15-5307. The Development Code clearly requires environmentally review pursuant to CEQA and the City may not "convert" the MEIR to the PEIR without ensuring that that review is in place.<br><br>The DPEIR's failure to include the entire project in its description, including implementa- | |

## Table 3.A: Comments and Responses Matrix

| Letter/ Comment Number | Comment | Response |
|---|---|---|
| | tion of both the General Plan and the Development Code over their entire life cycles, violates CEQA and results in an inaccurate impacts analysis that likely significantly underestimates the project's impacts. | |
| C3-5 | IV. The Applicable Baseline for the PEIR is 2012 Not 2019<br>The DPEIR's use of 2019 for the baseline year for the environmental setting is inconsistent with case law on the matter given that the City's intention is to use the PEIR as a substitute for the 2014 General Plan and Development Code MEIR. Rather, the correct baseline year for this project is 2012, the baseline year for the General Plan and Development Code when the City circulated the Notice of Preparation for the MEIR.<br>In POET LLC v. State Air Resources Board (2017), 12 Cal.App.5th 52, the Court held that the State Air Resources Board (ARB) failed to comply with a writ of mandate compelling ARB to correct deficiencies in its EIR for regulations that ARB adopted in 2009, because it used a baseline for subsequently adopted modifications to those regulations to determine the project's air emissions. The Court found that, contrary to ARB's view, the "project" included "the whole of ARB's activity in promulgating and enforcing...the regulations originally adopted in 2009" as well as "replacement regulations adopted in 2015 in response to the writ of mandate." 12 Cal.App.5th 52, 57. The Court continued:<br>"Consequently, ARB's view that the "project" included only the regulations adopted in 2015 was wrong and explains why it incorrectly chose 2014 NOx emissions as the baseline. The proper baseline for a project normally is the conditions existing when the environmental review of the project is commenced. Here, ARB's review commenced before the regulations were first approved in 2009. Thus, ARB's use of 2014 NOx emissions as the baseline was improper and generated flawed results when that baseline was plugged into the formula for calculating environmental change."<br>Like the DPEIR's incomplete project description, the DPEIR's selection of an inaccurate baseline undermines the credibility and accuracy of the DPEIR's analysis and likely results in significant underestimates of the project's impacts. The City must revise and recirculate the DPEIR in order to use a correct baseline which dates to the initiation of environmental review of the "whole action" before the City: the issuance of the Notice of Preparation for the General Plan and Development Code in 2012. | Please refer to Master Response: Project Description and Baseline Conditions. As noted in the Master Response, the EIR for the proposed project is a program EIR. When the General Plan was adopted in 2014, the City utilized a Master EIR to evaluate implementation of the General Plan. By updating the General Plan policies, and issuing the Notice of Preparation for the PEIR in May 2019, the regulatory conditions and physical conditions within the Planning Area at the time the NOP was issued are the baseline conditions. This provides a current understanding of the Planning Area. And as noted, the General Plan, as a whole, is not being considered to be re-adopted. |

## Table 3.A: Comments and Responses Matrix

| Letter/ Comment Number | Comment | Response |
|---|---|---|
| C3-6 | V. The DPEIR Fails to Adequately Analyze and Mitigate the Project's Aesthetic Impacts of Industrial Development in Rural and Residential Areas<br>The aesthetic, light and glare impacts resulting from implementation of the General Plan and Development Code has and will continue to significantly detrimentally residents in the Planning Area, including in particular incorporated and unincorporated rural and residential areas in the Southern portion of the Planning Area due to the extensive industrial development planned for these areas. The DPEIR fails to adequately analyze these impacts, acknowledge potentially significant impacts on scenic vistas, or identify and adopt feasible mitigation measures which would reduce the aesthetic, light and glare impacts on the environment and residents. | As discussed in Master Response: Project Description and Baseline Conditions, the Project Description limits the discretionary action of the City to approving changes to policies of the Mobility and Transportation Element, and the update to the Greenhouse Gas Reduction Plan. Environment impacts associated with aesthetics would not occur as a result of policy changes; no land use changes are proposed. As identified in the Section 4.1, Aesthetics, the Draft PEIR includes mitigation measures applicable to future development to address potential environmental impacts associated with lighting and glare. |
| C3-7 | VI. Substantial Adverse Impacts on Scenic Vistas in Rural and Residential Areas<br>The DPEIR concludes that the project would not have a substantial adverse effect on a scenic vista and that no mitigation is required to achieve this result. The analysis supporting the DPEIR's conclusion however fails to acknowledge or describe the impacts on scenic vistas of the Sierra Nevada Mountain Ranges and rural agricultural landscapes that implementation of the General Plan has had and will continue to have on neighborhoods in the Southern portion of the Planning Area which are designated by the General Plan Land Use Map for industrial development.<br>The DPEIR states that:<br>"scenic vistas may be impacted in two ways: a development project can have visual impacts by either directly diminishing the scenic quality of the vista or by blocking the view corridors or "vista" of the scenic resource. Important factors in determining whether a proposed project would block scenic vistas include the project's proposed height, mass, and location relative to surrounding land uses and travel corridors. Typical scenic vistas are locations where views of rivers, hillsides, and open spaces are accessible from public vantage points." (4.1-3) The General Plan's designation of thousands of acres of land for industrial development in and around neighborhoods in the Southern portion of the Planning Area has and will continue to directly diminish the quality and block the view of scenic vistas from both public and private spaces. These impacts arise as a result of the construction of large industrial warehouses and other industrial buildings on previously and/or currently vacant land and land occupied by agricultural or low-density residential uses and heavy truck and car traffic on local roadways generated by these industrial facilities. The height, mass, | Please refer to Master Response: Project Description and Baseline Conditions. As discussed, the proposed project does not include any land use changes that would alter the scenic vistas in rural or residential areas, because the current land uses have already been adopted. The existing land uses would not change as a result of the proposed project, and CEQA does not require analysis of land use changes that have already occurred. No additional response is necessary.<br>Existing development within the Planning Area is not subject to analysis of potential buildout. In addition, any new discretionary development that would occur as a result of the already-approved land use plan would be subject to CEQA analysis. Development within the SIPA or other areas of South Fresno would be subject to additional program-level analysis under applicable Specific Plan EIRs. As a result, the potential impacts described in this comment letter would not be evaluated in the Draft PEIR as new potential impacts. |

## Table 3.A: Comments and Responses Matrix

| Letter/ Comment Number | Comment | Response |
|---|---|---|
| | and location of industrial development permitted by the General Plan and Development Code and of the truck and car traffic which this development generates has and will have a substantial adverse impact on scenic vistas.<br><br>Since the General Plan's adoption, multiple warehouse distribution facilities have been developed and permitted in the area on previously vacant land or land occupied by agricultural or residential uses. As mentioned above, the General Plan designates approximately 6,000 acres of land for industrial development in the South Industrial Priority Area which have yet to be developed.<br><br>The Development Code permits buildings in all industrial zone districts, including the Heavy Industrial, Light Industrial, Regional Business Park, and Business Park zone districts, to stand up to 60 feet tall (or up to 30 or 40 feet when the building is within 40 or 50 feet of a residential property line) and requires buildings in those zone districts to be set back just 15 feet from the property line. FMC § 15-303, Tables 15-302-1 & 15-302-2. The construction of these buildings mars the scenic vista of the rural agricultural setting, as low-lying vineyards, agricultural lands, and small residential communities become interspersed with expansive and towering buildings in relation to the setting. The industrial buildings and other features of industrial sites, like retaining walls and berms, also substantially or completely block views of the Sierra Nevada Mountain Ranges from both public and private spaces depending on the location of the observer. For instance, since the adoption of the 2014 General Plan, the construction of the Ulta Beauty distribution facility and retaining walls along the facility's perimeter at 850 East Central Avenue has blocked the previously open view of the Sierra Nevada from within the community of Daleville on E Daleville and S Mary Avenues.<br><br>Constant truck and car traffic going to and from industrial facilities anticipated by the General Plan also diminishes the quality of and blocks scenic vistas in the Southern portion of the Planning Area. Pursuant to the California Vehicle Code, trucks may be up to 14 feet in height, and the average car is five to six feet tall. The near constant passage of these vehicles along local roadways substantially diminishes the quality and blocks the view of both the Sierra Nevada and agricultural lands for pedestrians and users of private property throughout the area.<br><br>In summary, the DPEIR's analysis is incomplete, because it fails to describe the project's potentially significant impacts on scenic vistas due to the General Plan's designation of land throughout the SIPA for industrial use and Development Code standards; and the DPEIR's conclusion that project impacts to scenic vistas are less than significant without | |

## Table 3.A: Comments and Responses Matrix

| Letter/ Comment Number | Comment | Response |
|---|---|---|
| | mitigation is incorrect given the clearly substantial impacts to scenic vistas that will arise due to the project. Given this, the DPEIR must consider and identify feasible and legally enforceable mitigation measures to reduce the project's impacts to scenic vistas on rural and residential areas in the SIPA. We recommend that the City consider the following measures to reduce these impacts:<br>● Revise the General Plan land use designations for the SIPA to non-industrial land use designations (i.e., designations other than Heavy Industrial, Light Industrial, Regional Business Park, and Business Park) adjacent to schools, places of worship, neighborhoods, residences, and public parks.<br>● Revise the Development Code to reduce the maximum building height allowed in Employment Districts where buildings would block the view of a scenic vista from a school, place of worship, neighborhood, residence, or public park.<br>● Revise the Development Code to require buildings in industrial zone districts to comply with further set back from property lines. | |
| C3-8 | VII. Significant Adverse Impacts on Visual Character and Quality of Rural and Residential Neighborhoods<br>The DPEIR recognizes that the land uses proposed by the General Plan would replace existing rural, agricultural, and open space uses and that as a result, continued implementation of the General Plan will substantially alter the visual character within the Planning Area. Yet the analysis fails to describe magnitude and severity of this impact, including in communities and neighborhoods located in these areas, and the DPEIR fails to identify feasible mitigation measures that would effectively reduce the projects impacts on visual character and quality. The City must revise the DPEIR to address these flaws and recirculate it for public review and comment. Sierra Club v. County of Fresno (2018) 6 C5th 502, 514 ([A]n EIR's designation of a particular adverse environmental effect as 'significant' does not excuse the EIR's failure to reasonably describe the nature and magnitude of the adverse effect.); City of Long Beach v. City of Los Angeles (2018) 19 CA5th 465, 486.<br>As discussed above, the General Plan land use designations and Development Code standards permit extensive industrial development throughout the SIPA in and around rural areas and residential communities. The project has and will continue to dramatically adversely impact the visual character and quality of these areas due to | Please refer to Master Response: Project Description and Baseline Conditions, and the response to Comment C3-7.<br>As described in the Master Response and in section 4.1, Aesthetics, of the Draft PEIR, the proposed project does not include any changes to the existing land use plan. The change in visual character that is referenced in this comment would result from implementation of the already-adopted land use plan. Future discretionary projects will be evaluated for visual impacts under CEQA, as applicable. |

## Table 3.A: Comments and Responses Matrix

| Letter/ Comment Number | Comment | Response |
|---|---|---|
| | changes in site utilization and building structures which both result in the loss of and contrast with the rural and low-density aesthetic features of the area. By designating the entire SIPA for industrial development except for certain public facilities such as existing schools and ponding basins, the project proposes to replace all existing agricultural and residential uses, including the entire community of Daleville, to industrial use. Bucolic vineyards, single-family farm residences, and single-family residences and neighborhoods would be replaced with concrete warehouses and other industrial facilities up to 60 feet tall. These changes would significantly degrade the visual character or quality of views from both public spaces, including public roadways, sidewalks, schools, places of worship, and other community spaces.<br>The DPEIR's significance criteria for impacts to visual character and quality do not include impacts to views from privately-owned spaces. The DPEIR provides no explanation for this exclusion. The adverse impacts to visual character and the quality of views on public sites also extend to privately-owned spaces, including the thousands of homes located in and immediately adjacent to the SIPA. The DPEIR must acknowledge and identify adequate mitigation to address these impacts too.<br>While the DPEIR acknowledges that the project will result in a potentially significant impact on visual character and quality of public views, it states that no feasible mitigation measures are available without even considering any measures at all. Contrary to what the DPEIR states, feasible and effective mitigation measures to avoid and reduce the impact exist and the DPEIR must be revised to incorporate them. | |
| C3-9 | VI. The DPEIR's Fails to Adequately Analyze and Identify Feasible Mitigation to Address The Project's Significant Transportation-Related Impacts on VMT and Alternative Modes of Transportation<br>A. The DPEIR Fails to Disclose Critical Information Necessary for an Identification of the Project's VMT Impacts and Unlawfully Fails to Identify a Threshold of Significance for VMT Impacts<br>The DPEIR identifies consistency with CEQA Guidelines section 15064.3 as a criteria for determination of whether a significant impact related to transportation would result from the project, but the DPEIR's subsequent analysis of this impact fails to (1) include information necessary to a determination of whether consistency is achieved and (2) identify thresholds of significance for VMT impacts. The DPEIR concludes that impacts in this category are less than significant, because of the DPEIR's own decision not to adopt | The Draft PEIR was completed and circulated for public review prior to the City's adoption of its VMT thresholds and guidelines. As such, consistent with sections 15064.3(c) and 15007 of the CEQA Guidelines, no determination regarding VMT was made. Since the public review of the Draft PEIR, the City adopted VMT guidelines and thresholds in June 2020 to be effective on July 1, 2020. The thresholds and guidelines adopted by the City include standardized screening methods for VMT threshold compliance data, and VMT significance thresholds for development projects, transportation projects, and plans. In addition, the VMT guidelines also include feasible mitigation strategies applicable for development projects, transportation projects, and plans. |

## Table 3.A: Comments and Responses Matrix

| Letter/ Comment Number | Comment | Response |
|---|---|---|
| | a significance threshold. As explained further below, the DPEIR's analysis with respect to this criteria is inadequate and violates CEQA.<br><br>The only quantitative information regarding current and forecasted VMT that the DPEIR provides regarding VMT is contained in Table 4.16-2. DPEIR, 4.16-40. A footnote to the table indicates that the information contained in the table was derived from the "Fresno Council of Governments Regional Travel Demand Model (2019)". However, the DPEIR provides no information at all about how the Regional Travel Demand Model calculates household or employment VMT for the City and County or about the assumptions that underlie the model. For example, the DPEIR does not explain whether the VMT figures include trips with a destination or origin in the City or County of Fresno but with an origin or destination beyond the City or County and if so, whether VMT measured includes the portions of those trips that extend beyond City and County limits. The DPEIR also does not state whether Table 4.16-2's city and county employment VMT figures include VMT from truck and car trips made by employees during the course of work and/or commute trips or whether those figures include truck trips made to and from development in Fresno by individuals who do not reside in and/or are not employed within the Planning Area. From our review of available documents, the DPEIR does not contain any copies with information describing the Regional Travel Demand Model or links to websites where a reader can learn more about the model. The failure to provide basic information about the nature of Regional Travel Demand Model undermines its ability to shed light on the project's VMT-related impacts for the public and decision-makers and its usefulness in assisting with a determination of the level of significance of VMT impacts.<br><br>Perhaps even more significantly, the DPEIR's selection of consistency with CEQA Guidelines section 15064.3(b) only to state that the City has not and is not legally required to adopt VMT thresholds at this time and therefore determines that the impacts for this category are less than significant turns the principles of CEQA on their head. Section 15064.3(c) allows a lead agency to "elect to be governed by the provisions of [the] section immediately," rather than waiting until July 1, 2020, when the provisions shall apply statewide. Having elected to establish consistency with Section 15064.3(b) as a criteria for significance for purposes of the DPEIR, the fact that Section 15064.3's application becomes mandatory for all projects only as of July 1, 2020 is irrelevant and the DPEIR must select a threshold of significance by which to assess significant VMT impacts. The DPEIR does not claim that development of a threshold of significance for VMT impacts is infeasible at this time nor does it provide any basis for its failure to select | As described in the Draft PEIR and Chapter 5.0 of the TIA (included as Appendix J of the Draft PEIR), a VMT analysis was prepared for disclosure purposes and to assist the City in updating its General Plan goals and policies that will eventually be consistent with the new CEQA requirements criteria for determination of whether a significant impact would result related to transportation. The VMT analysis included in the TIA demonstrates that implementation of the approved General Plan lessens per capita VMT compared to the countywide VMT per capita under year 2035 conditions. However, the approved General Plan VMT per capita is higher than the existing (2019) countywide VMT per capita. However, because VMT is location-specific, while much of the city will not generate significant amounts of VMT (i.e., the downtown), other areas of the city are shown to exceed the VMT threshold. Future projects developed under the approved General Plan in areas of the city that would have a demonstrably adverse effect on VMT generation would be subject to a project-specific VMT analysis and will have to either mitigate potential VMT impacts, or demonstrate potential benefits to the City to support a Statement of Overriding Consideration.<br><br>The Fresno COG Activity Based Model (ABM) was utilized to calculate project related VMT. ABM is the latest and most updated modeling concept being utilized to prepare travel demand models. VMT derived from an ABM includes all trips (described as tours) and therefore assists in calculating the VMT in its entirety. A detailed version of the Fresno COG ABM is located at the following link: https://www.fresnocog.org/project/fresno-county-transportation-modeling/.<br><br>Chapter 5.0 of the TIA describes in detail the methodology and findings of the analysis. As mentioned in the TIA and the Draft PEIR, and consistent with sections 15064.3(c) and 15007 of the CEQA Guidelines, a significant impact determination could not be made due to lack of any adopted thresholds and guidelines at the time the analysis was prepared. This was consistent with the statewide guidance and practice at that time. When the City prepares its next |

## Table 3.A: Comments and Responses Matrix

| Letter/ Comment Number | Comment | Response |
|---|---|---|
| | a VMT threshold of significance other than its claim that it is not legally required to until the July 1, 2020 deadline.<br>These failures violate CEQA. See e.g., 14 C.C.R. § 15151 (stating that "[a]n EIR should be prepared with a sufficient degree of analysis to provide decision makers with information which enables them to make a decision which intelligently takes account of environmental consequences" and "the sufficiency of an EIR is to be reviewed in the light of what is reasonably feasible"). If DPEIR retains consistency with section 15064.3(b) as a criteria for significance of the project's transportation impacts, the City must revise and recirculate the DPEIR so that it identifies a threshold and provides the information necessary to evaluate the project's impacts against that threshold. | General Plan update, it will have adopted thresholds and guidelines, and the VMT analysis will be updated to include the City's adopted requirements for preparation of a VMT analysis for Land Use Plans.<br>In response to this comment, and shown in Chapter 4.0 of this Response to Comments Document, text on page 4.16-40 has been revised as follows:<br>The City ~~has not yet established thresholds related to~~adopted VMT thresholds to be effective on July 1, 2020. With~~Once~~ adopted VMT thresholds for~~are established by~~ the City,~~ the~~ project impacts would be evaluated ~~against established thresholds~~ to determine the significance and identify mitigation measures, similar to LOS methodology.~~ Specific details about thresholds and methodologies for project impact evaluation and mitigations will be identified prior to July 1, 2020.~~<br>In addition, and shown in Chapter 4.0 of this Response to Comments Document, text on page 4.16-42 has been revised as follows:<br>In June 2020~~Currently~~, the City~~ does not have~~ adopted thresholds for which to evaluate potential VMT impacts related to proposed projects or continued implementation of the approved General Plan. Implementation of Policy MT-2-ml would allow the City to address potential VMT impacts for future projects as they are proposed. At the time this program EIR was prepared, consistent with CEQA Sections 15064.3(c) and 15007, no determination regarding VMT was made because the City did not have adopted thresholds and guidelines when the Draft PEIR was circulated for public comment~~has been made nor is one required~~. However, ~~after the City has adopted VMT thresholds, and~~ as future projects are proposed under the approved General Plan, VMT analyses consistent with CEQA Guidelines section 15064.3, subdivision (b) would be required to determine if the future project conflicts with the adopted thresholds.<br>**Applicable Laws, Regulations, Relevant Land Use Policies**<br>• Refer to the approved General Plan policies and objectives |

## Table 3.A: Comments and Responses Matrix

| Letter/ Comment Number | Comment | Response |
|---|---|---|
| | | identified in Section 4.16.4.4, Local Regulatory Setting, above.<br>**Level of Significance Without Mitigation:** Less Than Significant Impact. VMT Thresholds were not adopted prior to publication of this Draft PEIR~~have not yet been adopted by the City, nor are they required to be adopted until July 1, 2020~~. With the adoption of Policy MT-2-m, the City will use VMT as the criteria for transportation impacts as the approved General Plan is continued to be implemented. Therefore, impacts related to VMT are considered LTS at this time.<br>The following text revision is made to page 4.16-43 of the Draft PEIR:<br>A discussion of VMT resulting from build out of the General Plan along with cumulative development is discussed above in TRA-2. Cumulative development is accounted for in the Fresno COG ABM, however, as discussed, the City ~~has not yet~~ established thresholds related to VMT in June 2020. Effective July 1, 2020,~~Once~~the City will have VMT thresholds~~ are established by the City~~, and future~~the~~ project impacts would be evaluated against established thresholds to determine the significance and identify mitigation measures, similar to LOS methodology. Because~~Specific details about~~ thresholds and methodologies for project impact evaluation were not established prior to distribution of this Draft PEIR~~and mitigations will be identified prior to July 1, 2020. Until these thresholds are adopted by the City~~, VMT is provided in this Draft PEIR for disclosure purposes only. However, within implementation of the City's VMT Guidelines, effective July 1, 2020, impacts related to VMT would be reduced through mitigation measures identified in the City's VMT Guidelines that include, but are not limited to, improving or increasing access to transit, implementing employer-based trip reduction programs, and increasing development density. With implementation of the City's VMT Guidelines and mitigation measures associated with VMT, the impacts related to VMT would be considered less than significant. |

## Table 3.A: Comments and Responses Matrix

| Letter/ Comment Number | Comment | Response |
|---|---|---|
| | | Text revisions indicated above provide clarification and do not constitute significant new information that would require recirculation of the Draft PEIR. |
| C3-10 | B. The DPEIR Fails to Disclose, Analyze, or Identify Feasible Mitigation Measures For the Project's Significant Impacts on Pedestrians, Cyclists, or Transit Riders<br>The DPEIR contains no information or analysis of the project's impacts on pedestrians or cyclists. In fact, the DPEIR explicitly states that the DPEIR's Transportation Impact Analysis measures transportation impacts on roadway segments using level of service and that:<br>"[t]his methodology does not consider potential impacts on walking, biking, and transit. Pedestrians, bicyclists, transit riders are all users of the roadway system but may not be fully recognized in the traffic operations analysis and the calculation of LOS." 4.16-4.<br>The DPEIR lists certain General Plan policies relating to walking, biking, and public transportation. The DPEIR also dedicates significant space to policies contained within the City's Active Transportation Plan, a plan which was adopted after the General Plan and which is not a component thereof. The DPEIR does not include any discussion however of how the project itself might impact pedestrians, cyclists, or public transit users, to what extent the policies identified may or may not effects the degree or nature of those impacts, and whether project impacts to pedestrians, cyclists, or public transit users are potentially significant and require mitigation.<br>These omissions result in disproportionate impacts to residents of lower-income neighborhoods and neighborhoods of color in South Fresno which disproportionately rely on active transportation and public transit and which disproportionately lack basic infrastructure (e.g., sidewalks, streetlights, cross walks, storm water drainage) to accommodate walking and biking safely. These disproportionate impacts are deepened as a result of the General Plan's designation of these same neighborhoods for heavy industrial and warehouse development which the DPEIR acknowledges generate significant truck and car traffic. Pedestrians and cyclists forced to share the road with intensive truck and car traffic will be impacted by the air pollution, noise, and vibration generated by that traffic and the safety hazard of walking and biking on roads shared by trucks without sidewalks, crosswalks, or other protective measures. | The proposed project does not include any environmental changes that would result in significant impacts related to pedestrians, cyclists, or transit riders.<br>The approved General Plan includes goals, objectives and policies that complete a multi-modal transportation system and complete streets, as well as establishing well-integrated network of bicycle and pedestrian facilities. Goals, policies and objectives of the approved General Plan pertaining to pedestrians, cycling, and transit riders are listed beginning on page 4.16-18 of the Draft PEIR.<br>In addition, a discussion of the existing and future planned (planned as part of the approved and future General Plans) pedestrian and bicycle circulation network is included beginning on page 4.15-8 of the Draft PEIR. As discussed, the City adopted the Active Transportation Plan (ATP) in March 2017 to equitably improve the safety and perceived safety of walking and bicycling in the City, achieve an increased number of walking and bicycling trips by creating user-friendly facilities, improve the geographic equity of access to walking and bicycling facilities in the City, and fill key gaps in the City's walking and bicycling networks. The approved General Plan, and the policy amendments included as part of the proposed project evaluated in the Draft PEIR do not supersede nor conflict with the ATP, and do not modify the existing General Plan objectives and policies related to pedestrians, cycling, and transit riders.<br>As future projects are proposed under the approved General Plan, consistency with the approved General Plan, as well as the ATP and any other policy documents, would be evaluated on a case-by-case basis. Because the proposed project does not include any changes to the City's land use map that have not been previously evaluated, the proposed project and continued implementation of the approved General Plan would result in less-than-significant impacts to |

## Table 3.A: Comments and Responses Matrix

| Letter/ Comment Number | Comment | Response |
|---|---|---|
| | | pedestrians, cyclists, or transit riders. No further response is required. |
| C3-11 | VII. The DPEIR Fails to Adequately Analyze and Mitigate the Project's Air Quality Impacts<br>The City of Fresno and the surrounding San Joaquin Valley Air Basin suffer from some of the nation's worst air quality. In its 2020 State of the Air Report, the American Lung Association graded the Fresno-Madera-Hanford Metropolitan Area as the city with the worst short-term air pollution (24-hour PM2.5) The nation. pp. 8, 20. The State of the Air Report also ranked the Fresno Metropolitan area the second worst city for annual particle pollution and the fourth most ozone polluted city.7 ALA, State of the Air Report, pp. 9, 21, 22. While the entire population is adversely impacted by Fresno's poor air quality, people of color, people in poverty, children, the elderly, and people with underlying health conditions – all of whom comprise a significant portion of Fresno's population – face heightened health risks. Id. pp. 20, 21, 37, 66. It is therefore imperative that the DPEIR provide an accurate assessment of the project's potential to further degrade air quality and that it identify all feasible mitigation measures to minimize its impacts on the population and vulnerable groups in particular. Nevertheless, as explained below, while the DPEIR acknowledges that the project would cause a substantial increase in air pollution, it fails to include the complete and accurate information necessary to allow the public and decision-makers to understand the nature or magnitude of its impacts, including its impacts on public health in disadvantaged communities and among vulnerable populations, and as a result, fails to identify mitigation measures to reduce those impacts. | This comment suggests that the Draft PEIR provide an assessment of air quality impacts, including its impacts on public health in disadvantaged communities and among vulnerable populations, and identify mitigation measures to reduce those impacts. The estimated annual City of Fresno air pollutant emissions associated with buildout of the General Plan are shown in Table 4.3-8 of the Draft PEIR. The primary emissions associated with the project are regional in nature, meaning that air pollutants are rapidly dispersed on release or, in the case of vehicle emissions associated with the project; emissions are released in other areas of the Air Basin. As shown in Table 4.3-8 of the Draft PEIR, development that could occur under the approved General Plan would exceed SJVAPCD significance thresholds. The Draft PEIR is programmatic in nature and does not evaluate specific development projects that could be approved under the plan. Mitigation Measure Air-2.1 and AIR-2.2, included in the Draft PEIR would require a project specific construction and operational air quality evaluation to ensure emissions are reduced to the maximum extent feasible for future projects that require environmental evaluation under CEQA. Mitigation Measures AIR-3.1 and AIR-3.2 would also require an evaluation of health effects resulting from projects and the siting of sensitive receptors, which is consistent with the goals of the on-going air quality planning efforts in the City. In addition, the City will continue the planning efforts related to the Community Emissions Reductions Program (CERP), which requires additional emissions reporting, monitoring, and reduction plans and measures in an effort to reduce air pollution exposure in disadvantaged communities. A CERP for South Central Fresno was adopted and is now in the implementation phase. |
| C3-12 | A. The DPEIR Fails to Support its Conclusion that the Project Will Not Violate Applicable Air Quality Plans With Facts<br>The DPEIR concludes that the Project would not conflict with or obstruct implementation of the applicable air quality plans ("AQPs"). Applicable AQPs adopted by the San Joaquin | This comment focuses on the proposed project's potential to violate applicable air quality plans. The Draft PEIR lists the current SJVAPCD air quality plans on page 4.3-22 and discusses the current air quality plans on page 4.3-23. (It should be noted that some of the older ozone plans referenced by the commenter, including the 2004 |

## Table 3.A: Comments and Responses Matrix

| Letter/ Comment Number | Comment | Response |
|---|---|---|
| | Valley Air Pollution Control District ("SJVAPCD" or "Air District") include the following:<br>● 2004 Revision to the California State Implementation Plan for Carbon Monoxide<br>● The 2004 Extreme Ozone Attainment Demonstration Plan;<br>● The 2007 Ozone Plan<br>● The 2007 PM10 Maintenance Plan<br>● 2013 Plan for the Revoked 1-hour Ozone Standard<br>● 2014 RACT Demonstration for Ozone State Implementation Plan<br>● 2016 Moderate Area Plan for the 2012 PM2.5 Standard<br>● 2016 Plan for the 2008 8-Hour Ozone Standard<br>● 2018 Plan for the 1997, 2006, and 2012 PM2.5 Standards<br>Several of these plans, while listed on the Air District's website, are not identified or analyzed in the DPEIR. In addition, the DPEIR references the Community Emissions Reduction Plan ("CERP") for South Central Fresno which was adopted by the Air District Board in 2019, but it does include it in its analysis of the project's consistency with AQPs. Since the purpose of the CERP is to reduce air pollution exposures in disadvantaged South Fresno neighborhoods which are currently overburdened by air pollution, consistency with the CERP must be included in the DPEIR's analysis.<br>The DPEIR states that, "[T]he growth projections used for the approved General Plan assume that growth in population, vehicle use and other source categories will occur at historically robust rates that are consistent with the rates used to develop the SJVAPCD's attainment plans." 4.3-46. However, the DPEIR fails to support this assertion with quantified population, vehicle use, and other source category growth projections used in the applicable AQPs or the General Plan.<br>Similarly, the DPEIR states that, "Review of the goals and policies of the General Plan found them to be consistent with the applicable control measures of the SJVPACD attainment plan." 4.3-47. However, the DPEIR provides no information about the review process relied upon to substantiate this conclusion. The DPEIR contains no discussion of the primary goals and control measures contained in the applicable AQPs and how they compare to the goals and policies of the General Plan, including the General Plan land | Extreme Ozone Attainment Demonstration Plan, 2007 Ozone Plan, and the 2014 RACT Demonstration for Ozone State Implementation Plan have been replaced by the SJVAPCD with updated plans, including the 2004 Revision to the California State Implementation Plan for Carbon Monoxide, 2007 $PM_{10}$ Maintenance Plan, 2013 Plan for the Revoked 1-Hour Ozone Standard, 2016 Plan for the 2008 8-Hour Ozone Standard, 2016 Moderate Area Plan for the 2012 $PM_{2.5}$ Standard and the 2018 Plan for the 1997, 2006, and 2012 $PM_{2.5}$ Standards, which are evaluated in this PEIR.) In addition, the Draft PEIR discusses the CERP on page 4.3-26. As discussed in the Draft PEIR, following the SJVAPCD Guidelines, the assessment used two tests to determine if the project conflicts or obstructs the applicable air quality plans. First, if development proposed by the approved General Plan exceeds the growth projections used in the applicable attainment plan, it would produce a potentially significant impact. Second, if the project includes goals, policies, and development standards that are in conflict with the development related control measures in the attainment plans, the project would be potentially significant.<br>As discussed in the Draft PEIR, for a project to be consistent with the attainment plans, the pollutants emitted from project operation should not exceed the SJVAPCD daily threshold or cause a significant impact on air quality, or the project must already have been included in the attainment plans projection. Because the attainment plans are based on local General Plans, the Draft PEIR concluded that the amount of growth predicted for the approved General Plan is accommodated by the SJVAPCD's attainment plan and would not conflict with the attainment of the 8-hour ozone standard by the 2023 attainment date.<br>As identified in the Draft PEIR, review of the goals and policies of the approved General Plan (listed in Section 4.3.5.4 of the Draft PEIR) found the goals and policies to be consistent with the applicable control measures of the SJVAPCD attainment plans. The approved General Plan includes numerous policies that would reduce |

## Table 3.A: Comments and Responses Matrix

| Letter/ Comment Number | Comment | Response |
|---|---|---|
| | use map. Based on our review, the DPEIR contains no evidence to substantiate the conclusion that the project is consistent with the applicable AQPs. This is at odds with case law interpreting CEQA which clearly establishes that the "EIR must contain facts and analysis, not just the agency's bare conclusions or opinions. Citizens of Goleta Valley v. Board of Supervisors (1990) 52. Cal.3d 553, 568.<br><br>The DPEIR generally asserts that "continued implementation of the approved General Plan would allow for implementation of the City's sustainability efforts that reduce motor vehicle use and energy consumption," and that for this reason, "continued implementation of the approved General Plan" would support the implementation of the SJVAPCD's attainment plans." 4.3-46. Yet, the General Plan's designation of more than 6,000 acres of land for industrial development in South Fresno, including in unincorporated Fresno County and where residences and community-serving facilities like places of worship and corner stores currently exist, undercut this conclusion. Industrial development pursuant to the General Plan, both around and over existing communities, will inevitably result in many direct and indirect adverse air quality impacts, including as a result of induced development elsewhere as residents relocate. Without a substantive comparison of the General Plan's goals and policies with the goals and control measures contained in the AQPs, including goals and policies which may conflict with the AQP, the DPEIR cannot demonstrate a basis for its conclusion that the General Plan is consistent with the applicable AQPs. | operational air pollutant emissions and increase energy efficiency. The applicable goals and policies are listed in the previous section. The City also participates in regional planning efforts such as the San Joaquin Valley Blueprint Project and works closely with Fresno COG in developing Regional Transportation Plans and capital improvement plans and capital improvement plans (see General Plan Policy MT-1-p). These efforts contribute to the attainment strategy for the SJVAB. In addition, as identified in the Draft PEIR, continued implementation of the approved General Plan would allow for implementation of the City's sustainability efforts that reduce motor vehicle use and energy consumption. This is accomplished with more compact development achieved by increasing development density and by providing a land use pattern and transportation infrastructure more supportive of public transportation, walking, and bicycling.<br><br>This comment also suggests that industrial development pursuant to the General Plan, both around and over existing communities, will inevitably result in many direct and indirect adverse air quality impacts, including as a result of induced development elsewhere as residents relocate. As discussed in the Draft PEIR, the SJVAPCD adopted rules and regulations specifically designed to reduce the impacts of growth on the applicable air quality plans. For example, Rule 9510, Indirect Source Review, was adopted to provide emission reductions needed by the SJVAPCD to demonstrate attainment of the federal $PM_{10}$ standard and contribute to reductions that assist in attaining federal ozone standards. Rule 9510 also contributes toward attainment of State standards for these pollutants. The SJVAPCD's Regulation VIII, Fugitive $PM_{10}$ Prohibitions, requires controls for sources of particulate matter necessary for attaining the federal $PM_{10}$ standards and achieving progress toward attaining the State $PM_{10}$ standards. Rule 2201, New and Modified Stationary Source Review, requires new and modified stationary/industrial sources to provide emission controls and offsets that ensure that stationary sources decline over time and do not impact the applicable air quality plans. Development associated with continued implementation of the |

## Table 3.A: Comments and Responses Matrix

| Letter/ Comment Number | Comment | Response |
|---|---|---|
| | | approved General Plan would comply with these rules and regulations providing additional support for the conclusion that it would not interfere or obstruct with the application of the attainment plans. Prior to future discretionary project approval, projects would still need to comply with the SJVAPCD's attainment plans consistent with CEQA. Furthermore, ministerial projects must be implemented in conformance with applicable policies, regulations, and plans. In addition, all projects, whether discretionary or not, must adhere to SJVAPCD Rules and Regulations, including Rule 9510 (Indirect Source Review) and Regulation VIII (Fugitive Dust Prohibitions), and Rule 9410 for businesses over 100 employees (Employer Based Trip Reduction). |
| C3-13 | B. The DPEIR Fails to Thoroughly and Accurately Disclose and Identify Adequate Mitigation to Minimize the Project's Criteria Air Pollutant Impacts<br>While the DPEIR concludes that the Project will result in significant impacts on criteria air pollutants ("CAPs"), it fails to provide an adequate description of those impacts. The DPEIR's analysis fails to acknowledge or address conflicting information regarding criteria air pollutant emissions contained in the MEIR, fails to incorporate information about the significant impacts associated with General Plan implementation to date, and misrepresents the scope of mitigation which it claims which reduce anticipated impacts. As the Supreme Court stated in its decision in Sierra Club v. Fresno County (2018), "An adequate description of adverse environmental effects is necessary to inform the critical discussion of mitigation measures and project alternatives at the core of the EIR. Sierra Club v. Fresno County (2018) 6th Cal.5th 502, 514. | This comment states that the Draft PEIR fails to provide an adequate description of criteria pollutant impacts or differences in emission results from the previously prepared MEIR. Emissions were calculated using the current recommended modeling techniques in consultation with the SJVAPCD staff. Criteria pollutant emissions were estimated for the project using the California Emissions Estimator Model (CalEEMod) version 2016.3.2 based on buildout of the approved General Plan. CalEEMod utilizes widely accepted methodologies for estimating emissions combined with default data that can be used when site-specific information is not available. Sources of these methodologies and default data include, but are not limited to, the United States Environmental Protection Agency (USEPA) AP-42 emission factors, California Air Resources Board (CARB) vehicle emission models, studies commissioned by California agencies such as the California Energy Commission (CEC) and CalRecycle. In addition, some local air districts provided customized values for their default data and existing regulation methodologies for use for projects located in their jurisdictions. CalEEMod calculates both construction emissions and operational emissions from a land use project.<br>Source of electricity and natural gas emissions: 2010 emissions are from PG&E; future emissions are projected using population (for |

## Table 3.A: Comments and Responses Matrix

| Letter/ Comment Number | Comment | Response |
|---|---|---|
| | | residential electricity) and employment (for commercial electricity). Note that industrial emissions are not available.<br>Source of stationary and area: ARB CEIDARS inventory for the year 2010; since the data is from real facilities, it would be impossible to predict if the emissions would increase or decrease in the future. Therefore, the emissions are assumed to remain the same over time.<br>* $PM_{2.5}$ emissions for stationary/area are not available.<br>Source of off-road vehicles: ARB's OFFROAD2007 model; 2056 emissions use 2035 emissions because OFFROAD only provides emission data to the year 2040. There may be some overlap in the stationary/area source emissions and the off-road vehicle emissions.<br>Source of net change between 2010 and 2056: 2056 emissions minus 2010 emissions.<br>A health effects summary is provided on pages 4.3-53 through 4.3-54 of the Draft PEIR. The Draft PEIR determined that although the emissions from project operations are expected to exceed the SJVAPCD's project level thresholds, this does not in itself constitute a significant health impact to the future residents on the project site and within the SJVAB. In addition, as discussed in the Draft PEIR, the project's emissions are not sufficiently high enough to use a regional modeling program to correlate health effects on a Basin-wide level. The Draft PEIR concluded that although the existing policies, ordinances, and regulations and the objectives and policies proposed in the approved General Plan will reduce criteria pollutant emissions, the project exceeds the SJVAPCD project level thresholds of significance for ROG, $NO_x$, $PM_{10}$, and $PM_{2.5}$. Therefore, the project impact is considered potentially significant. |
| C3-14 | 1. The DPEIR's Analysis of Project-Related CAPs Fails to Provide Critical Information & Relies on Faulty Assumptions and Unsound Reasoning to Supports Its Conclusions<br>The DPEIR's analysis of the impacts of criteria air pollutant that will result from the Project does not allow the public and decision-makers to understand the nature and magnitude of the CAPs that will result from the project and fails to demonstrate that its conclusions are supported by sound reasoning and evidence. The DPEIR must be revised | This comment refers to the Draft PEIR's analysis of criteria air pollutants that would result from implementation of the proposed project. The estimated annual City of Fresno air pollutant emissions associated with buildout of the approved General Plan are shown in Table 4.3-8 of the Draft PEIR. Based on consultation with the SJVAPCD, the emission estimates contained in the Draft PEIR are |

## Table 3.A: Comments and Responses Matrix

| Letter/ Comment Number | Comment | Response |
|---|---|---|
| | to include an accurate and complete analysis of the project's CAPs and their impacts and to include appropriate mitigation measures to address those impacts.<br>First, annual emissions forecasts contained in the DPEIR are dramatically lower than the emissions forecasts contained in the 2014 General Plan MEIR for all CAPs, despite the fact that both sets of data analyze General Plan implementation. DPEIR Table 5.3-9 identifies the annual emissions levels for Reactive Organic Gases (ROG), NOx, PM10, and PM2.5, and MEIR Table 5.3-88 identifies the annual emissions levels for those pollutants in the years 2020, 2035, and 2056 as follows:<br>***[Note to Reader: A table included as a part of this comment is included in its entirety in Comment C3-14, included in Appendix K: Public Comment Letters on the Draft PEIR.]***<br>The DPEIR's annual emissions estimates for ROG, NOx, PM10, and PM2.5 are respectively 28 to 29; 30.7 to 36; 9.8 to 11; 18 to 22 times larger than the MEIR's emissions estimates for those same pollutants. The DPEIR provides no explanation for the vast discrepancy between the estimates contained in the adopted MEIR and the DPEIR, including whether they are due in part to the different baseline years used DPEIR (2019) and MEIR (2012). The DPEIR also does not explain why the figures contained in the DPEIR should be relied on and those contained in the MEIR are incorrect. | reporting average annual emissions estimates. Although it is not clear what the MEIR emissions were based on, the emission estimates contained in the MEIR are likely total emissions. In addition, the Draft PEIR utilized the current version of the California Emissions Estimator Model (CalEEMod) that incorporates the latest emission factors from the California Air Resources Board, which differ from the analysis done for the MEIR. The previously prepared MEIR utilized older modeling techniques. As discussed in Table 5.3-9 of the MEIR, annual air pollutant emissions were analyzed using the following sources:<br>Source of motor vehicle emissions: The emissions include all on-road vehicles, including light duty automobiles, light duty trucks, light heavy-duty trucks, motorcycles, motor homes, buses, and heavy-duty trucks. Emissions were estimated by FirstCarbon Solutions using emission factors from the EMFAC2011 model and vehicle miles traveled data from Fehr and Peers.<br>The SJVAPCD now requires the CalEEMod model, which was used in the Draft PEIR for air quality analyses. |
| C3-15 | Second, while the DPEIR concludes that on a cumulative basis, project construction emissions would exceed SJVAPCD annual thresholds, the DPEIR finds that impacts of fugitive dust (which the DPEIR indicates contains PM10 and PM2.5 emissions) from construction activities are considered less than significant" despite substantial adverse fugitive dust impacts that have resulted from General Plan and Development Code implementation to date. DPEIR, 4.3-48, 49. During construction of the Amazon and Ulta Beauty distribution facilities following adoption of the General Plan on parcels designated by the General Plan Land Use Map for Heavy Industrial development, residents of properties located on East Central Avenue between Orange and Cedar Avenues experienced the ongoing accumulation of heavy layers of dust on and around their properties and automobiles. Residents were forced to keep their windows shut to reduce the infiltration of dust inside their homes. Even with such preventative measures, residents observed layers of dust accumulate inside their residences. Residents' exposure to dust in their neighborhoods, outside on their properties, and within their homes resulted in significant public health impacts by triggering allergies, asthma, and breathing difficulties. See Attachment 2, South Central Neighbors United v. City of | This comment suggests that individual development projects that occur as a result of the continued implementation of the approved General Plan could result in fugitive dust impacts. As identified in the Draft PEIR, SJVAPCD Regulation VIII includes requirements to control fugitive dust emissions during construction activities and requires commercial projects over 5 acres and residential projects over 10 acres to file a Dust Control Plan. The SJVAPCD's Guidance for Assessing and Mitigating Air Quality Impacts (GAMAQI) states that compliance with Regulation VIII will normally reduce impacts from fugitive dust to less than significant. Rule 9510 – Indirect Source Review requires projects to reduce exhaust related construction emissions by 20 percent for $NO_x$ and by 50 percent for $PM_{10}$; however, significance for these emissions is based on whether projects exceed the SJVAPCD annual quantitative thresholds. As discussed in the Draft PEIR, the SJVAPCD indicates that the control measures in Regulation VIII are required by regulation for all construction sites to reduce |

## Table 3.A: Comments and Responses Matrix

| Letter/ Comment Number | Comment | Response |
|---|---|---|
| | Fresno, et al., Petition for Writ of Mandate and Complaint for Injunctive Relief, p. 7, lns. 21-23. The Amazon and Ulta Beauty distribution facilities' construction demonstrate that individual development projects that occur as a result of General Plan implementation, including industrial and warehouse development near residential areas in and outside of the SIPA, have potentially significant adverse fugitive dusts impact regardless of the existence of Air District Regulation VIII and other regulations which the DPEIR cites. The DPEIR must be revised to incorporate these facts into its analysis and to revise the conclusion that construction-related fugitive dust impacts for individual projects resulting from General Plan implementation are less than significant. | fugitive dust emissions. The GAMAQI lists additional measures that may be required because of sheer project size or proximity of the project to sensitive receptors. The additional measures are referred to as "enhanced control measures" in the GAMAQI. These enhanced control measures have been added as amendments to Regulation VIII, so they are no longer considered mitigation measures that could be imposed on very large or sensitive projects, but standard control measures required for rule compliance. As indicated above, the SJVAPCD requires all control measures in Regulation VIII are required by regulation for all construction sites to reduce fugitive dust emissions. The purpose of the SJVAPCD's Regulation VIII is to reduce ambient concentrations of fine particulate matter ($PM_{10}$) by requiring actions to prevent, reduce or mitigate anthropogenic fugitive dust emissions. The control measures are required to be included as specifications for the proposed project and implemented at the construction site, consistent with the SJVAPCD's rules and regulations. Per section 6.2 of Regulation VIII, owner/operators must maintain records and any other supporting documents to demonstrate compliance with the requirements of the rules under regulation VIII for those days that control measures are implemented. Under section 7.0 of the Rule, an operator may implement a Fugitive $PM_{10}$ Management Plan that is designed to achieve 50 percent control efficiency for approval by the Air Pollution Control Officer.<br><br>As stated above, each commercial project over 5 acres in size and residential project over 10 acres in size is required to submit a Dust Control Plan to the SJVAPCD for approval and requires control measures adequate to prevent significant fugitive dust impacts. If measures included in the Dust Control Plan prove inadequate to control fugitive dust, construction contractors must implement additional controls or cease dust generating construction activities. In addition, projects smaller than the Dust Control Plan size thresholds must still comply with most other Regulation VIII requirements. The SJVAPCD will dispatch an inspector to investigate any dust pollution problems as reported to them. |

## Table 3.A: Comments and Responses Matrix

| Letter/ Comment Number | Comment | Response |
|---|---|---|
| C3-16 | Third, the DPEIR's analysis of construction and operational CAPs in several instances states that the application of Air District rules to individual projects resulting from General Plan implementation will reduce project emissions and that projects that exceed Air District thresholds of significance after implementing those rules will be required to implement additional mitigation measures to reduce emissions to less than significant or the City would be required to prepare an EIR. 4.3-49, 50. This statement is inaccurate though, because it fails to acknowledge that dozens of individual project types are permitted by right in the Development Code and thus will not be subject to further review and mitigation pursuant to CEQA. The City must revise the DPEIR to address the inaccuracy by clarifying which project types are and are not subject to discretionary permit approval and further environmental review. Without this clarification, the DPEIR violates CEQA by overstating the degree of mitigation and misrepresenting the magnitude of the adverse impacts from criteria air emissions that will occur as a result of General Plan implementation. Sierra Club v. County of Fresno (2018) 6 Cal.5th 502, 514. | The Draft PEIR includes and analysis of the anticipate emissions associated with the continued implementation of the approved General Plan. Mitigation Measure AIR-2.2 requires an evaluation of potential project impacts and includes numerous measures that would reduce project level impacts to the extent feasible. However, as noted on page 4.3-57 of the Draft PEIR, while Mitigation Measure AIR-2.2 would significantly reduce criteria air pollutant emissions associated with operational activities, the Draft PEIR acknowledges that future development projects may exceed the SJVAPCD regional significance thresholds and operational impacts would be considered significant and unavoidable. Non-discretionary projects which are deemed to be in conformance with applicable statutes, ordinances, or regulations could be approved without CEQA review; however, all projects, whether discretionary or not, must adhere to SJVAPCD Rules and Regulations, including Rule 9510 (Indirect Source Review) and Regulation VIII (Fugitive Dust Prohibitions), and Rule 9410 for businesses over 100 employees (Employer Based Trip Reduction). The magnitude of potential health effects associated with the continued General Plan implementation is discussed on pages 4.3-53 and 4.3-4 of the Draft PEIR. |
| C3-17 | Fourth, the DPEIR uses circular reasoning to arrive at its unsubstantiated conclusion that construction emissions will not violate AQPs. The DPEIR states that "[e]missions related to projected construction activities are included in emission forecasts used to demonstrate attainment of the applicable air quality standards and would therefore, not interfere or obstruct with SJVAPCD attainment plans." 4.3-49. The DPEIR does not provide any information about any specific emissions forecasts contained any particular Air District attainment plan to show that the construction emissions which may be expected by this project are in fact accurately anticipated by the Air District attainment plans. The DPEIR also does not explain how the attainment plans could accurately account for construction emissions of projects, including plan-level projects, before they are even proposed and approved, when those projects would impact the nature and extent of future emissions. If the DPEIR's logic is accepted at face value, all construction-related criteria air emissions associated with any proposed project would be accounted for in existing AQPs and such emissions would never conflict with an AQP. This is clearly not the case. | This comment questions the Draft PEIR's conclusion that emissions related to projected construction activities are included in emission forecasts used to demonstrate attainment of the applicable air quality standards and would therefore, not interfere or obstruct with SJVAPCD attainment plans. Because the attainment plans are based on local General Plans, the Draft PEIR concluded that the amount of growth predicted for the approved General Plan is accommodated by the SJVAPCD's attainment plans. Additionally, the $PM_{2.5}$ attainment plan and the 8-Hour Ozone attainment plan state that construction and demolition emissions are included in the emissions inventory for these plans. However, as discussed in the Draft PEIR, the combined impact of all construction projects to reach buildout is a cumulative impact that makes it more difficult to attain the air quality standards compared to a scenario where no growth takes place. |

## Table 3.A: Comments and Responses Matrix

| Letter/ Comment Number | Comment | Response |
|---|---|---|
| | | In addition, the buildout associated with the continued implementation of the approved General Plan would result in potentially hundreds of individual development projects. Information regarding specific development projects, soil conditions, and the location of sensitive receptors in relation to the various projects would be needed in order to determine localized impacts associated with construction activity. However, overall estimates based on annual rates of construction activity required to reach buildout provides a reasonable method for determining an annual contribution rate for construction emissions. Emissions from construction activities are expected to decline over time as new cleaner equipment replaces older higher emitting equipment. However, on a cumulative basis, construction emissions would continue to exceed SJVAPCD annual thresholds even with the regulatory reductions.<br><br>Although individual projects may exceed SJVAPCD project level thresholds, using a project threshold to address the impact of hundreds of projects that would be constructed under General Plan buildout is a highly conservative measure of project level significance for an impact that is cumulative in nature. The Draft PEIR concluded that when project construction emissions are viewed in relation to the applicable air quality plans adopted by the SJVAPCD, the emissions would not result in a significant cumulative contribution since the emissions would not interfere with attainment of air quality standards. However, estimated annual project construction emissions exceed project level thresholds by a substantial margin for all pollutants. Therefore, construction emissions were determined to be significant and unavoidable.<br><br>Emissions were calculated using the current recommended modeling technique in consultation with the SJVAPCD staff. Construction-related criteria pollutant emissions were estimated for the project using the California Emissions Estimator Model (CalEEMod) version 2016.3.2 based on buildout of the approved General Plan. CalEEMod utilizes widely accepted methodologies for estimating emissions combined with default data that can be used when site-specific |

## Table 3.A: Comments and Responses Matrix

| Letter/ Comment Number | Comment | Response |
|---|---|---|
| | | information is not available. Sources of these methodologies and default data include but are not limited to the United States Environmental Protection Agency (USEPA) AP-42 emission factors, California Air Resources Board (CARB) vehicle emission models, studies commissioned by California agencies such as the California Energy Commission (CEC) and CalRecycle.<br>The previously prepared MEIR utilized older modeling techniques. As identified in the MEIRU in Table 5.3-8, City of Fresno Planning Area Construction Emissions, emissions were analyzed based on the CARB Almanac 2009 Fresno County Emissions. The Planning Area share of emissions was based on the city having 60 percent of the population in Fresno County. |
| C3-18 | Fifth, the DPEIR fails to support its conclusion that the project's stationary source emissions may be expected to be less than significant. The DPEIR's analysis references emissions from the City's top-three stationary source emitters but does not explain how those facilities' emissions are relevant to an analysis of stationary source emissions which may be expected from General Plan implementation or include any other discussion of nature or magnitude of stationary source emissions which are likely to result from General Plan implementation. To reach its conclusion that stationary source emissions are less than significant, the DPEIR 1) identifies and briefly describes Air District Rule 2201 (New and Modified Stationary Source Review), and 2) unspecified "prohibitory rules" that the Air District has adopted that "set emission limits and/or identify control technologies" and states that the "net effect of this regulatory system is continued reductions in stationary source emissions including the continued implementation of the approved General Plan." DPEIR, 4.3-52. The DPEIR does not identify a significance threshold specifically applicable to this section of its analysis. Assuming the threshold is the threshold identified in the introduction to the DPEIR's analysis of criteria air pollutant impacts, "whether the cumulative impact of development predicted by the continued implementation of the approved General Plan would conflict with plans adopted to achieve applicable standards," then the DPEIR's determination that impacts associated with stationary source criteria emissions is less than significant is based on the circular and nonsensical reasoning that the existence of Rule 2201 and other unspecified "prohibitory rules" guarantee conformity therewith as General Plan implementation occurs. Accordingly, the DPEIR lacks substantial evidence | This comment relates to the project's potential to emit stationary source emissions. As discussed in the Draft PEIR, a variety of industrial and commercial processes (e.g., food processing plants, glass manufacturers, gas stations, dry cleaning) are currently allowed under the approved General Plan and would emit criteria pollutant emissions. As these stationary sources are permitted under the approved General Plan, the Draft PEIR identifies the top three stationary/area source emitters within the City of Fresno Planning Area. In addition, as discussed in the Draft PEIR, emissions from stationary sources are regulated at the local and regional level through SJVAPCD permitting and prohibitory rules. Under Rule 2201–New and Modified Stationary Source Review, sources emitting more than two pounds per day of any regulated pollutant are required to obtain an Authority to Construct (ATC) and Permit to Operate (PTO) from the SJVAPCD, and to implement best available control technology (BACT). Emission offsets are required for stationary sources that exceed offset thresholds contained in Rule 2201 to ensure that stationary sources decline over time and do not impact the applicable air quality plans. The SJVAPCD has also adopted prohibitory rules, including Regulation VIII, Fugitive $PM_{10}$ Prohibitions, which that set emission limits and/or identify control technologies that apply to new and existing sources and further |

## Table 3.A: Comments and Responses Matrix

| Letter/ Comment Number | Comment | Response |
|---|---|---|
| | to support its determination that stationary-source criteria emissions are less than significant and must be revised. See California Oak Federation v. Regents Univ. of California (2010) 188 Cal.App.4th 227, 261-232 (An agency has abused its discretion under CEQA if the determination or decision is not supported by substantial evidence); CEQA Guidelines § 15384(a) (substantial evidence means "enough relevant information and reasonable inferences from this information that a fair argument can be made to support a conclusion.") | reduce emissions. The imposition of valid regulations can reliably reduce impacts to less than significant. However, as with other operational activities associated with the continued implementation of the approved General Plan, there is currently not enough information to quantify emissions of a specific development project, including stationary source development that may occur under the proposed project. Therefore, consistent with the findings of Impact AIR-2, emissions are assumed to be significant and unavoidable. |
| C3-19 | 2. The DPEIR's Analysis of the Health Impacts Associated with the Project's CAPs Does Not Satisfy CEQA's Requirements<br>The DPEIR's analysis (or lack thereof) of the connection between the project's likely CAP emissions and health impacts falls far short of the standards set by CEQA by 1) failing to acknowledge at all potential health impacts on certain vulnerable populations, and by 2) dismissing the possibility of assessing the health impacts of the project's CAPs without providing adequate justification. These failures and the DPEIR's resulting lack of mitigation to address the health impacts associated with the project's CAP emissions will disproportionately harm people of color, low-income Fresnans, the elderly and children who are most susceptible to air pollution as well as disadvantaged communities in and near the Planning Area which are designated for new industrial development.<br>The DPEIR's discussion in this section only refers generally to certain known health effects of ozone and particulate matter on people. See DPEIR, 4.3-53, 54. Section 4.3.3.5 describes individuals who are sensitive to air pollution as "children, the elderly, and persons with pre-existing respiratory or cardiovascular illness." DPEIR, 4.3-8. However, research shows lower educational attainment levels, linguistic isolation, housing-cost burden level, and poverty and a person's racial characteristic as a person of color all increase vulnerability to adverse health effects as a result of air pollution exposures. See CalEPA's Update to the California Communities Environmental Health Screening Tool, CalEnviroScreen, 3.0, January 2017, pp. 12,9 American Lung Association, 2020 State of the Air Report, pp. 20, 21, 37, 66.<br>The DPEIR's analysis of the health impacts of CAPs anticipated by the project reaches conclusions without providing a clear rationale to justify the conclusion. For instance, the DPEIR states that project emissions would not be expected to exceed NAAQs or CAAQs for NOx or PM, because daily emissions of criteria air pollutants from the project would | As discussed in the Draft PEIR, the primary emissions associated with the project are regional in nature, meaning that air pollutants are rapidly dispersed on release or, in the case of vehicle emissions associated with the project; emissions are released in other areas of the Air Basin. As such, referencing the total emissions inventory for Fresno County would be applicable. The total emissions inventory for Fresno County is shown in Table 4.3-2 of the Draft PEIR. As shown in Table 4.3-9 of the Draft PEIR, the daily increase in emissions associated with the continued implementation of the General Plan would be a small fraction of the county's emissions. In addition, the Draft PEIR is programmatic in nature and does not evaluate specific development projects that could be approved under the approved General Plan. The Draft PEIR includes a citywide analysis of all sensitive receptors, including vulnerable populations, based on the thresholds established by the SJVAPCD. Criteria pollutant emissions were estimated for the project using the California Emissions Estimator Model (CalEEMod) version 2016.3.2 based on buildout of the approved General Plan. CalEEMod utilizes widely accepted methodologies for estimating emissions combined with default data that can be used when site-specific information is not available. Sources of these methodologies and default data include but are not limited to the United States Environmental Protection Agency (USEPA) AP-42 emission factors, California Air Resources Board (CARB) vehicle emission models, studies commissioned by California agencies such as the California Energy Commission (CEC) and CalRecycle. In addition, some local air districts provided customized |

## Table 3.A: Comments and Responses Matrix

| Letter/ Comment Number | Comment | Response |
|---|---|---|
| | equal only a fraction of the County of Fresno's daily total air emissions. But the DPEIR provides no explanation of why its assessment that the share of the project's emissions as a portion of Fresno County's total emissions would be small demonstrates that the project itself will not lead to exceedances of NAAQs or CAAQs. Further, even if project emissions did not result in exceedances of NAAQs or CAAQs, those emissions may still be significant if CAP emissions significantly impact human health – a fact which the DPEIR does not acknowledge or take into account in its analysis. 14 C.C.R. §§ 15131(b) & 15382(e) (economic and social effects of a physical change may be used to determine that the physical change is a significant effect on the environment). Accordingly, the DPEIR's failure to include any discussion of the project's anticipated emissions of CAPs for which the Air District is currently in attainment, including Lead, Carbon Monoxide, and Sulfur Dioxide and the connection between those emissions and human health also renders the DPEIR deficient.<br><br>The DPEIR also states that "emissions of NOx, VOCs, and ozone... have been trending downward within the SJVAB even as development has increased over the last several years. Therefore, continued implementation of the General Plan is not expected to result in any Basinwide increase in health effects." DPEIR, 4.3-53. The DPEIR does not explain or demonstrate why the downward trend in NOx, VOCs, and ozone at the same time as development, presumably across the SJVAB, has increased over the last several years means that this project will not result in any Basin-wide increase in health effects.<br><br>Further, the DPEIR makes no attempt to correlate the project's anticipated emissions of criteria air pollutants and human health. Rather, it claims that an analysis of the correlation between a project's anticipated criteria air pollutants on human health is not possible, relying entirely on statements contained in a 2015 Amicus Curiae brief10 by the Air District in Sierra Club, et al. v. Fresno County, et al. that "currently available modeling tools are not equipped to provide a meaningful analysis of the correlation between an individual development project's air emissions and specific human health impacts." DPEIR, 4.3, 53, 54. Yet, the project studied by the DPEIR is not in fact an individual development project but rather a plan-level project encompassing all development within the General Plan Planning Area through buildout in 2056 for which the DPEIR choses to use project-level significance thresholds. The DPEIR may not use its decision to employ project-level significance thresholds for CAPs as a basis to avoid any effort to correlate the project's CAPs and human health impacts. Further, the DPEIR says only that regional modeling does not exist "to correlate health effects [of the project] on a Basin- | values for their default data and existing regulation methodologies for use for projects located in their jurisdictions. CalEEMod calculates both construction emissions and operational emissions from a land use project. In addition, as discussed in the Draft PEIR, the SJVAPCD's project level thresholds are based in part on Section 180 (e) of the Clean Air Act. The project level thresholds are intended to provide a means of consistency in significance determination within the environmental review process. As such, simply exceeding the SJVAPCD's project level thresholds does not constitute a particular health impact to an individual nearby. The reason for this is that the project level thresholds are in tons/year emitted into the air, whereas health effects are determined based on the concentration of a pollutant in the air at a particular location (e.g., ppm by volume of air or $\mu g/m^3$ of air). CAAQS and NAAQS were developed to protect the most susceptible population groups from adverse health effects and were established in terms of ppm or $\mu g/m^3$ for the applicable emissions. The project emissions would not be expected to exceed the most stringent applicable NAAQS or CAAQS for $NO_X$, $PM_{2.5}$, and $PM_{10}$.<br><br>Health effects of air pollutants are described in Table 4.3-4 of the Draft PEIR. Health effects of the project are described on page 4.3-53 through page 4.3-54 of the Draft PEIR. The text on these pages constitutes a reasonable effort to discuss the connection between the health effects and the pollutants associated with project.<br><br>The Draft PEIR describes the total emission inventory for Fresno County in Table 4.3-2 and compares it to the project emissions in Table 4.3-9 which shows the correlation between City of Fresno emissions and total Countywide emissions. Photochemical modeling of the Air Basin would determine pollutant concentrations, however, given the small amount of project related emissions when compared to a countywide or basin-wide total emissions, the pollutant load from implementation of the General Plan would not alter the regional air pollutant concentrations due to the relatively small fraction of emissions from the project when compared to basin wide |

## Table 3.A: Comments and Responses Matrix

| Letter/ Comment Number | Comment | Response |
|---|---|---|
| | wide level" but does not connect or explain why a connection cannot be made between the project's CAPs and human health impacts in particular locations or on vulnerable populations. DPEIR, 4.3-54.<br><br>The DPEIR states that the Air District indicates that it would take a "large amount" of additional emissions to result in a modeled increase in ambient ozone levels over the entire region, and that "[a]s such, it is not currently possible to accurately quantify ozone-related health impacts caused by NOX or VOC emissions from relatively small projects." DPEIR, 4.3-54. The DPEIR does not state what constitutes a "large amount" of emissions for purposes of this statement. In addition, the DPEIR does not even provide any information about the quantity of ozone that may be expected to result from project implementation. In recent case law, the Supreme Court held that inclusion of raw numbers estimating tons of ROG and NOx from a project alone do not provide meaningful information to a reader about how much ozone will be produced and whether that ozone will result in adverse health effects. Sierra Club, et al. v. Fresno County (2018) 6 Cal.5th 502, 520. Further, the DPEIR also does not but must discuss whether other means exist, apart from scientific models used by the Air District as of 2015, to shed light on the potential human health impact of ozone (or any CAP) based on anticipated project emissions.<br><br>The Air District's assertion in a legal brief in 2015 that it lacks models to assess CAP impacts from individual projects on human health does not justify the DPEIR's failure to make any attempt to conduct such an analysis. As the Supreme Court stated in Sierra Club, "technical perfection" or "scientific certainty" are not required of a DPEIR's analysis, but "adequacy, completeness, and a good-faith effort at full disclosure" is. Sierra Club v. Fresno County (2018) 6 Cal.5th 502, 515.<br><br>Finally, the DPEIR does not acknowledge the link between air pollution and population vulnerability to coronavirus (COVID-19). The New York Times recently reported on a new nationwide study finding that coronavirus patients in areas with higher PM2.5 levels are more likely to die from the infection than patients in areas with lower air pollution levels.11 The DPEIR must incorporate this and other studies which bear on residents' vulnerability to illness, including mass illness and pandemics such as coronavirus , due to air pollution exposure into its analysis of project impacts and suitable mitigation measures. | emissions. As noted by the SJVAPCD in the Brief of Amicus Curiae by the SJVAPCD (2015), an analysis correlating the criteria air pollutant emissions associated with project specific localized health –impacts does not yield reliable information because currently available modeling tools are not well suited for this task. Computer models used to simulate and predict air quality for ozone or particulate matter are based on regional inputs, such as inventories of pollutants and the atmospheric chemistry and meteorology of the valley.<br><br>As discussed in the Draft PEIR, the SJVAPCD's project level thresholds are based in part on Section 180 (e) of the Clean Air Act. The project level thresholds are intended to provide a means of consistency in significance determination within the environmental review process. As such, simply exceeding the SJVAPCD's project level thresholds does not constitute a particular health impact to an individual nearby. As discussed in the Draft PEIR and as noted in the Brief of Amicus Curiae by the SJVAPCD (2015), the SJVAPCD has acknowledged that currently available modeling tools are not equipped to provide a meaningful analysis of the correlation between an individual development project's air emissions and specific human health impacts. (See page 4 of the SJVAPCD Brief of Amicus Curiae). Additionally, the SJVAPCD acknowledges that health effects quantification from ozone, as an example, is correlated with the increases in ambient level of ozone in the air (concentration) that an individual person breathes. The SJVAPCD indicates that it would take a large amount of additional emissions to result in a modeled increase in ambient ozone levels over the entire region. As such, it is not currently possible to accurately quantify ozone-related health impacts caused by $NO_X$ or VOC emissions from relatively small projects (defined as projects with a regional scope) due to photochemistry and regional model limitations. For comparison purposes, the Draft PEIR describes the total emission inventory for Fresno County in Table 4.3-2 and compares it to the project emissions in Table 4.3-9 which shows the correlation between City of Fresno emissions and total Countywide emissions for this context. |

## Table 3.A: Comments and Responses Matrix

| Letter/ Comment Number | Comment | Response |
|---|---|---|
| | | As such, the project's emissions are not sufficiently high enough to use a regional modeling program to correlate health effects on a Basin-wide level. Further, the SJVAPCD acknowledges the same: "…the Air District is simply not equipped to analyze and to what extent the criteria pollutant emissions of an individual CEQA project directly impact human health in a particular area…even for projects with relatively high levels of emissions of criteria pollutant precursor emissions." (See page 8 of the SJVAPCD Brief of Amicus Curiae.) The SJVAPCD Brief of Amicus Curiae are incorporated by reference into the Draft PEIR.<br>Future development projects implemented as part of the project would be required to comply with Mitigation Measure AIR-2.2 which would require a technical evaluation prepared in conformance with current SJVAPCD methodology for assessing air quality impacts. Therefore, as new modeling techniques become available over the life of the project, future projects would be evaluated using the latest methods, which could include new methodologies to assess project-specific health impacts. Table 4.3-4 of the Draft PEIR describes the sources and health effects of air pollutants. The proposed project is not expected to result in substantial changes to the levels of lead, carbon monoxide, or sulfur dioxide. The CEQA guidelines do not include any criteria or thresholds for evaluating COVID-19. |
| C3-20 | 3. The DPEIR Fails to Identify Adequate Mitigation for the Project's Criteria Air Pollutants<br>The DPEIR identifies two mitigation measures in response to the significant impacts of project-related criteria air pollutants which the DPEIR identifies. Yet the design of those mitigation measures, Mitigation Measures Air-2.1 and Air-2.2, ensure that they will not effectively minimize CAP impacts to the extent feasible. See DPEIR, 4.3-55. First, these measures only apply to projects which require discretionary review. The General Plan contains explicit policies promoting streamlined project review and the Development Code implements these policies by designating numerous land uses as subject only to ministerial review. Thus, many projects that implement the General Plan will not be required to undergo further review under CEQA or to comply with Mitigation Measures Air-2.1 and 2.2. Further, these mitigation measures inappropriately defer the formulation of mitigation to future projects, though this mitigation could be identified at this time. | This comment suggests that the Draft PEIR provide mitigation measures which apply to all projects. All projects, whether discretionary or not, must adhere to SJVAPCD Rules and Regulations, including Rule 9510 (Indirect Source Review) and Regulation VIII (Fugitive Dust Prohibitions), and Rule 9410 for businesses over 100 employees (Employer Based Trip Reduction). Ministerial projects that are not subject to environmental review must still comply with applicable rules, regulations and environmental programs.<br>The Draft PEIR is programmatic in nature and does not evaluate future specific development projects that could be approved under the approved General Plan. However, Mitigation Measures included in the Draft PEIR will require a project specific construction and |

## Table 3.A: Comments and Responses Matrix

| Letter/ Comment Number | Comment | Response |
|---|---|---|
| | The City must revise the DPEIR to incorporate mitigation measures which apply to all projects (not only those subject to discretionary review) that contribute to the General Plan's significant CAP emissions impacts and identify enforceable and feasible mitigation at this time. Examples of feasible and effective mitigation measures include but are not limited to:<br>● the re-designation of industrial land uses near residential land uses, schools, and other sensitive receptors to less intensive and community-serving uses;<br>● amendment of the Citywide Development Code to incorporate enhanced protections for disadvantaged communities and vulnerable populations, including adopting conditional use permit requirements for warehouse facilities and other land uses known for significant air quality impacts; heightened standards for acceptable impact levels for permit issuance; heightened performance standards; and specific penalties and enforcement measures to reduce air quality-related violations for projects which would have air quality impacts and are located in or near disadvantaged communities;<br>● the adoption and resourcing of a program to conduct proactive code enforcement of air quality-related rules, regulations, and mitigation measures applicable to industrial facilities, warehouse and distribution centers, and other facilities which result in significant air emissions in disadvantaged communities;<br>● the creation of a program to dedicate funds for enforcement of air quality-related rules and regulations to programs within and benefiting disadvantaged communities and vulnerable populations to reduce the impacts of their exposure to air pollution; and,<br>● commitments to take specific actions and work proactively with the Air District to implement specific policies and measures contained in the South Fresno Community Emissions Reduction Plan. | operational air quality evaluation to ensure emissions are reduced to the maximum extent feasible for future projects that require environmental evaluation under CEQA. Mitigation Measure AIR-2.1 requires that prior to future discretionary project approval, development project applicants shall prepare and submit to the Director of the City Planning and Development Department, or designee, a technical assessment evaluating potential project construction phase-related air quality impacts. The evaluation shall be prepared in conformance with SJVAPCD methodology for assessing construction impacts. If construction related air pollutants are determined to have the potential to exceed the SJVAPCD adopted threshold of significance, the Planning and Development Department shall require that applicants for new development projects incorporate mitigation measures into construction plans to reduce air pollutant emissions during construction activities. The identified measures shall be included as part of the Project Conditions of Approval. In addition, Mitigation Measure AIR-2.2 requires that prior to future discretionary project approval, development project applicants shall prepare and submit to the Director of the City Planning and Development Department, or designee, a technical assessment evaluating potential project operation-related air quality impacts. The evaluation shall be prepared in conformance with SJVAPCD methodology in assessing air quality impacts. If operation-related air pollutants are determined to have the potential to exceed the SJVAPCD-adopted thresholds of significance, the Planning and Development Department shall require that applicants for new development projects incorporate mitigation measures to reduce air pollutant emissions during operational activities. The identified measures shall be included as part of the Project Conditions of Approval. Mitigation Measure AIR-3.1 will also require an evaluation of health effects resulting from projects and the siting of sensitive receptors, which is consistent with the goals of the on-going air quality planning efforts in the City. Mitigation Measure AIR-3.2 requires locating sensitive land uses (e.g., residences, schools, and daycare centers) to avoid incompatibilities with recommended buffer distances identified in the most current |

## Table 3.A: Comments and Responses Matrix

| Letter/ Comment Number | Comment | Response |
|---|---|---|
| | | version of the CARB Air Quality and Land Use Handbook: A Community Health Perspective (CARB Handbook). Sensitive land uses that are within the recommended buffer distances listed in the CARB Handbook shall provide enhanced filtration units or submit a Health Risk Assessment (HRA) to the City. If the HRA shows that the project would exceed the applicable SJVAPCD thresholds, mitigation measures capable of reducing potential impacts to an acceptable level must be identified and approved by the City. In addition, the City of Fresno will continue the planning efforts related to the CERP, which requires additional emissions reporting, monitoring, and reduction plans and measures in an effort to reduce air pollution exposure in disadvantaged communities. A CERP for South Central Fresno was adopted and is now in the implementation phase. |
| C3-21 | C. Inadequate Analysis and Mitigation of Exposure of Sensitive Receptors to Substantial Pollutant Concentrations<br>1. The DPEIR Fails to Adequately Describe the Existing Setting by Failing to Identify Sensitive Receptors<br>The DPEIR provides no information about the existing exposure of sensitive receptors to TACs in the Planning Area. This failure violates CEQA's fundamental requirement that EIRs include a description of the physical environmental conditions in order to "give the public and decision makers the most accurate and understandable picture practically possible of the project's likely near-term and long-term impacts." CEQA Guidelines § 15125(a). "If the description of the environmental setting 'is inaccurate, incomplete or misleading, the EIR does not comply with CEQA.'" Cleveland National Forest Foundation v. San Diego Assn. of Governments (2017) 17 Cal.App.5th 413. An EIR's description of the environmental setting must be contain sufficient information to "permit the significant effects of the project to be considered in the full environmental context." Id. § 15125(c). An accurate description of the environmental setting is critical, because the significance of an activity may vary with the setting. CEQA Guidelines, § 15064(b). A "project that is ordinarily insignificant in its impact on the environment may in a particularly sensitive environment be significant." Kings County Farm Bureau v. City of Hanford (1990) 221 Cal.App.3d 692, 718, 721; CEQA Guidelines, § 15300.2(a). Without an adequate description of the public's existing exposure to TACs, the PEIR cannot inform the public and decision-makers of the existing nature and scope of TACs' impacts on sensitive | As discussed in the Draft PEIR, continued implementation of the approved General Plan would allow for new residential units to be constructed within the city; however precise location of future residential units is unknown at this time. Based on modeling conducted by LSA, if new sensitive receptors were sited within 500 feet of SR 99, 400 feet within SR 41, 400 feet of SR 180, or 500 feet within SR 168; or within CARB's minimum siting recommendations of other stationary sources; future residents may be exposed to significant concentrations of air pollutants. Residential land uses or other sensitive uses could be developed near or adjacent to areas designated for commercial and industrial uses and in proximity to existing permitted TAC sources. Risk contours within the City of Fresno are shown in Appendix C of the Draft PEIR.<br>In addition, as discussed in the Draft PEIR, CEQA does not generally require an agency to consider the effects of existing environmental conditions on a proposed project's future users or residents. However, as with other laws and regulations enforced by other agencies that protect public health and safety, the City, as the lead agency, has authority other than CEQA to require measures to protect public health and safety.<br>As listed in Section 4.3.7.1 of the Draft PEIR, the approved General |

## Table 3.A: Comments and Responses Matrix

| Letter/ Comment Number | Comment | Response |
|---|---|---|
| | receptors, the significance of the impacts of the project's exposure of sensitive receptors to TACs, and appropriate mitigation measures and/or project alternatives to address the impact, and cannot fulfill its purpose of allowing the public and decision-makers to intelligently decide whether approval of the project is worth the risk.<br><br>Although the DPEIR does not disclose it, incorporated and unincorporated neighbor-hoods in the Southern portion of the planning area are already heavily impacted by emissions from existing industrial uses, warehouse distribution centers, freeway traffic, fueling stations, and the use of local roadways for heavy diesel truck traffic. These neighborhoods (including but not the Flamingo Mobile Home Park, residences along East Central Avenue and South Orange Avenue, and the community of Daleville), Calwa, the community located along Drummond and Jensen Avenues, and Southeast Fresno. These and other South Fresno neighborhoods rank among the most pollution burdened in the state according to the California Communities Environmental Health Screening Tool (CalEnviroScreen), 3.0., a tool created by the California Environmental Protection Agency to identify communities by census tract which are disproportionately burdened by and vulnerable to multiple sources of pollution. See Attachment C. To rank neighborhoods across the state, CalEnviroScreen 3.0 uses population twelve pollution burden and eight population characteristic indicators. The CalEnviroScreen pollution burden indicators include the air pollution exposure indicators of ozone, PM2.5, Diesel Particulate Matter, pesticide use, toxic releases from facilities, and traffic density.<br><br>Ten of the twenty highest ranked census tracts in the state under CalEnviroScreen are located in South Fresno neighborhoods. See Attachment C. Census Tract 601900100 ranks as the most pollution-burdened census tract, encompasses portions of South Central, Southwest, and Southeast Fresno, and includes Orange Center Elementary School. In terms of air pollution exposure, Census Tract 601901100 in the 93706 zip code ranks in the 98th percentile for ozone, 97th percentile for toxic releases from facilities, 97th percentile for PM2.5, and 95th percentile for diesel. Census Tract 6019001500, located in the 93725 zip code and which includes incorporated and unincorporated residential neighborhoods in South Central and Southeast Fresno and is listed as the third most pollution burdened neighborhood in California, ranks as the fifth most pollution burdened census tract in the state and in the 98th percentile for ozone, 98th percentile for toxic releases, 97th percentile for PM2.5, and 95th percentile for pesticides. As another example, Census Tract 601901000 in the 93706 zip code ranks as the eighth most pollution burdened census tract in the state and in the 99th percentile | Plan includes Policies with provisions for reducing exposure of sensitive receptors to TAC emissions including: UF-12-d, LU-6-f, MT-1-d, MT-1-j, and MT-5-c.<br><br>As identified in the Draft PEIR, while existing City policies and regulations are intended to minimize impacts associated with sensitive receptors, mitigation measures for future project develop-ments that implement these policies and regulations are identified to ensure that the intended environmental protections are achieved. Compliance with Mitigation Measure AIR-3.1 would ensure that mobile sources of TACs not covered under SJVAPCD permits are considered during subsequent project-level environmental review. Mitigation Measure AIR-3.1 would require the preparation of project-specific technical health risk assessments for certain discretionary large industrial or warehousing uses to evaluate operational-related health risk impacts.<br><br>However, information regarding operational characteristics of future specific development projects and the associated emissions cannot be determined at the time of this analysis; therefore, the Draft PEIR determined that cumulative growth within the city could result in potential TAC health could cumulatively contribute to elevated health risks in the city.<br><br>In addition, the City of Fresno will continue the planning efforts related to the CERP, which requires additional emissions reporting, monitoring, and reduction plans and measures in an effort to reduce air pollution exposure in disadvantaged communities. A CERP for South Central Fresno was adopted and is now in the implementation phase. |

## Table 3.A: Comments and Responses Matrix

| Letter/ Comment Number | Comment | Response |
|---|---|---|
| | for ozone and toxic releases, 97th percentile for PM2.5, and 96th percentile for diesel and traffic. In addition to data from CalEnviroScreen, the DPEIR could easily incorporate TAC data from the U.S. EPA's National Air Toxic Assessment14, which include data on ambient pollution concentrations, exposures, and health risks for every census tract in the U.S., to describe the environmental setting in the Planning Area and neighborhoods which are already disproportionately exposed to TACs.<br><br>These same census tracts, census tracts 601901100, 6019001500, and 601901000, and other top-ranking census tracts in South Fresno, also all score among the highest in the state for the CalEnviroScreen indicators for asthma, low-birth weight, and cardiovascular disease – all health issues to which pollutant exposure is a contributor and which render individuals' more susceptible to health impacts from pollution. See Attachment C; Update to the California Communities Environmental Health Screening Tool, CalEnviroScreen 3.0 Report, January 2017, pp. 6-7, 11, 27, 33, 6016. The fact is that South Fresno communities bare an extreme and disproportionate air pollution burden and experience particular vulnerability to toxic air contaminants compared to other neighborhoods in Fresno and the state, yet the DPEIR entirely fails to disclose this fact and incorporate it into its analysis and mitigation measures and to even identify the sensitive receptors which may be impacted by air pollution from industrial facilities, warehouses, truck traffic, and other facilities and activities generated by the project.<br><br>In addition, the DPEIR does not identify sensitive receptors in the Planning Area which may be impacted by the continued implementation of the General Plan and Development Code. The DPEIR's discussion of sensitive receptors is limited to two sentences that generally describe what sensitive receptors are and the statement that, "There are many sensitive receptors throughout the city of Fresno.17" 4.3-8. The DPEIR makes no effort to identify any specific sensitive receptors in or around the Planning Area nor does it identify sensitive receptors which may be particularly vulnerable to existing air pollution exposures or exposures which will likely occur with implementation of the General Plan. An adequate impact analysis necessarily requires a thorough description of existing sensitive receptors (i.e., those segments of the population must susceptible to poor air quality, including children, the elderly, and those with pre-existing health problems which are impacted by air quality). The DPEIR must also identify the location of sensitive receptors in relation to areas designated for industrial and warehouse development and other land uses which may be expected to generate substantial quantities of toxic air contaminants as well as to roadways expected to | |

## Table 3.A: Comments and Responses Matrix

| Letter/ Comment Number | Comment | Response |
|---|---|---|
| | experience high volumes of diesel truck traffic and car traffic as a result of General Plan and/or Development Code implementation. This is necessary to permit a complete and accurate analysis of the project's potential exposure of sensitive receptors to substantial quantities of toxic air contaminants.<br>The DPEIR's failure to include critical information about the environmental setting in vulnerable communities also prevents the DPEIR from making accurate determinations about the significance of project-related air emissions and exposure of sensitive populations to toxic air contaminants. Without information about existing air pollution levels within vulnerable communities, health factors impacting susceptibility to adverse outcomes due to air pollution exposure in those communities, and the location of sensitive receptors, the DPEIR cannot accurately inform the public and decision-makers about the nature and magnitude of the impact of exposure of sensitive receptors to air emissions. The California Supreme Court has made clear that, "[A]n EIR's designation of a particular adverse environmental effect as 'significant' does not excuse the EIR's failure to reasonably describe the nature and magnitude of the adverse effect." Sierra Club v. County of Fresno (2018) 6 Cal.5th 502, 514. | |
| C3-22 | 2. The DPEIR Fails to Adequately Describe Toxic Air Contaminants Which May Impact Sensitive Populations<br>The DPEIR specifically identifies only four TACs -- benzene, butadiene, formaldehyde, and hydrogen sulfide – and provides little information about their individual health impacts. However, the California EPA identifies several dozen TACs and provides extensive documentation regarding their unique health impacts.18 The DPEIR's cannot analyze the impacts of toxic air pollution on sensitive receptors where it has not even identified the air pollutants at issue. | This comment states that the Draft PEIR only specifically identifies four TACs. TACs are discussed as a group of pollutants of concern. As noted on page 4.3-15 of the Draft PEIR, TACs do not have ambient air quality standards, but are regulated by the USEPA, CARB, and SJVAPCD. As specific development projects are not proposed at this time, and the proposed project would allow for the continued implementation of the General Plan, individual TAC emissions are not known at this time. As listed in Section 4.2.7.1 of the Draft PEIR, the approved General Plan includes policies with provisions for reducing exposure of sensitive receptors to TAC emissions including: UF-12-d, LU-6-f, MT-1-d, MT-1-j, and MT-5-c. As stated on page 4.30-60 of the Draft PEIR, future development associated with the continued implementation of the approved General Plan would be required to comply with CARB and SJVAPCD regulations related to TAC emissions. Mitigation Measure AIR-3.1 would ensure that mobile sources of TACs not covered under SJVAPCD permits are considered during project review, while Mitigation Measure AIR-3.1 would require the preparation of project-specific technical health risk assessments for |

## Table 3.A: Comments and Responses Matrix

| Letter/ Comment Number | Comment | Response |
|---|---|---|
| | | large industrial projects. The City acknowledges that information regarding future specific development projects and the associated emissions (including TACs) cannot be determined at the time of this analysis. Therefore, health risks associated with potential TAC emissions were determined to be significant and unavoidable. |
| C3-23 | 3. The DPEIR Fails to Acknowledge and Analyze the Air Pollution Exposure in Disadvantaged Communities Resulting from the General Plan's Industrial Land Use Designations & Fails to Analyze Exposure<br>The DPEIR acknowledges that high-volume roadways, stationary diesel engines, and. "facilities attracting heavy and constant diesel vehicle traffic," including distribution centers and trucks stops, have been identified by CARB as "posing the highest risk to adjacent receptors." DPEIR, 4.3-15. The DPEIR also states that other facilities with increased risk include warehouse distribution centers and large industrial facilities and that "most diesel particulate matter," a carcinogen, "is emitted from mobile sources" including construction and agricultural equipment, truck-mounted refrigeration units, and "trucks and buses traveling on freeways and local roadways." DPEIR, 4.3-16. Despite these recognitions, the DPEIR fails to even acknowledge, let alone adequately analyze the impacts of, the project's land use and transportation policies which would concentrate industrial and warehouse distribution facilities and generate voluminous diesel truck traffic in some of the most vulnerable communities in Fresno County and the state. | As listed in Section 4.3.7.1 of the Draft PEIR, the approved General Plan includes policies with provisions for reducing exposure of sensitive receptors to TAC emissions including: UF-12-d, LU-6-f, MT-1-d, MT-1-j, and MT-5-c.<br>As identified in the Draft PEIR, while existing City policies and regulations are intended to minimize impacts associated with sensitive receptors, mitigation measures for future project developments that implement these policies and regulations are identified to ensure that the intended environmental protections are achieved. The proposed project is a program-level General Plan, and specific development projects are not proposed as part of the project. Compliance with Mitigation Measure AIR-3.1 would ensure that mobile sources of TACs not covered under SJVAPCD permits are considered during subsequent project-level environmental review. Mitigation Measure AIR-3.1 would require the preparation of project-specific technical health risk assessments for certain discretionary large industrial or warehousing uses to evaluate operational-related health risk impacts.<br>However, information regarding operational characteristics of future specific development projects and the associated emissions cannot be determined at the time of this analysis because such plans have not been developed; therefore, in order to be conservative, the Draft PEIR determined that cumulative growth within the city could cumulatively contribute to elevated health risks in the city. This impact was determined to be significant and unavoidable. |

## Table 3.A: Comments and Responses Matrix

| Letter/ Comment Number | Comment | Response |
|---|---|---|
| C3-24 | 4. The DPEIR Fails to Make a Good-Faith Effort to Analyze Health Risks Resulting from Sensitive Populations' Exposures to TACs<br>The DPEIR fails to include any meaningful analysis of potential exposure of sensitive receptors to TACs based on its assertion that it is not possible to calculate the risks, because the City cannot determine the amount of TACs that will be released. The DPEIR fails to make a good-faith effort to provide information that is available regarding potential exposures of sensitive receptors and possible health impacts given General Plan land use designations, land uses permitted within those designations and their potential TAC emissions, their proximity to sensitive receptors, and factors impacting sensitive receptor exposure in those locations.<br>The City must revise the DPEIR to correct these deficiencies and adopt adequate mitigation measures to address the exposure of sensitive populations to air pollution as identified in the revised DPEIR. | The Draft PEIR is programmatic in nature and does not evaluate specific development projects that could be approved under the approved General Plan. As discussed in the Draft PEIR, continued implementation of the approved General Plan would allow for new residential units to be constructed within the city; however precise location of future residential units is unknown at this time. Based on modeling conducted by LSA, if new sensitive receptors were sited within 500 feet of SR 99, 400 feet within SR 41, 400 feet of SR 180, or 500 feet within SR 168; or within CARB's minimum siting recommendations of other stationary sources; future residents may be exposed to significant concentrations of air pollutants. Residential land uses or other sensitive uses could be developed near or adjacent to areas designated for commercial and industrial uses and in proximity to existing permitted TAC sources. Risk contours within the city of Fresno are shown in Appendix C of the Draft PEIR.<br>Mitigation Measures included in the Draft PEIR will require an evaluation of health effects resulting from future projects and the siting of sensitive receptors, which is consistent with the goals of the on-going air quality planning efforts in the City. |
| C3-25 | VIII. The DPEIR Fails to Satisfy CEQA's Requirements Relating to the Analysis and Mitigation of Significant Energy Impacts<br>A. The DPEIR's Restriction of the Study Area for Energy Impacts to the Planning Area Results Artificially Excludes Analysis of the Project's Energy Impacts<br>The DPEIR's description of the Project Area for energy impacts is the City of Fresno Planning Area. 4.6-2. However, this Project Area artificially excludes analysis of project impacts from certain phases and components of the Project, including transportation-related and operational energy impacts which extend beyond the Planning Area. For example, the project designates land for industrial development and warehouse distribution centers in South Fresno. Distribution facilities may be expected to vehicle miles travelled from trucks that travel to and from facilities along Highway 99 and other high-volume freeways and roadways. These truck trips will require fuel throughout their journeys and will therefor impact energy usage well beyond the Planning Area.<br>With respect to operations resulting from the project, the General Plan plans for | As identified in the Draft PEIR, the proposed project includes text changes to the Mobility and Transportation Element, updates to the Greenhouse Gas Reduction Plan, and continued implementation of the approved General Plan. Text changes to the Mobility and Transportation Element related to VMT analysis would not result in any physical improvements that would require the construction of new energy generating facilities within the Planning Area. Similarly, updates to the Greenhouse Gas Reduction Plan do not change the distribution or intensity of land uses and, therefore, would not result in any physical impacts that would affect energy.<br>In addition, as discussed in Section 4.6.5.3 of the Draft PEIR, the approved General Plan includes numerous policies and implementation programs that are focused on improving the sustainability of the city, including reducing the consumption of non-renewable energy resources by requiring and encouraging conservation measures and |

## Table 3.A: Comments and Responses Matrix

| Letter/ Comment Number | Comment | Response |
|---|---|---|
| | extensive industrial and warehouse distribution center development in close proximity to residential areas located just outside of the Planning Area. One example is the disadvantaged unincorporated community of Malaga, which is located less than a quarter-mile to the East of the Planning Area. The development and operation of industrial and warehouse distribution facilities on land that is currently vacant or used for farming may be expected to result in ambient temperature increases for nearby land uses, including existing residential, commercial, and public facilities just outside of the Planning Area.<br><br>The City must revise and broaden the DPEIR's Study Area for energy impacts so that the energy impacts associated with all phases of project implementation are included in the impact analysis. 14 C.C.R. § 1516.2(b) (EIR's analysis must include the project's energy use for all project phases and components, including transportation-related energy, during construction and operation); CEQA Guidelines Appendix F. | the use of alternative energy sources (Policies RC-8-a through RC-8-k) and incentives for affordable housing providers, agencies, non-profit and market rate developers to use LEED and CalGreen Tier 1 or Tier 2 standards or third party equivalents (Policy HC-3-d). Moreover, the energy efficiency of buildings is expected to continue to increase and improve throughout the life of the project as new energy efficiency standards are established. |
| C3-26 | B. The Description of the Project Setting Fails to Identify Diesel Fuel and Renewable Energy Supplies and Use Patterns in the Planning Area<br><br>An EIR's description of the environmental setting must include existing energy supplies and energy use patterns in order to permit a complete and accurate assessment of the project's energy impacts. See CEQA Guidelines Appendix F(II)(B).<br><br>The DPEIR's environmental setting discussion's contains just one reference to renewable energy sources -- a statement of the percentage that renewable sources comprise among all energy sources generated in California. The DPEIR's environmental setting discussion includes no information whatsoever about existing renewable energy supplies and energy use patterns in Fresno. The DPEIR must be revised to include information about supplies and usage of wind, solar, hydrogen and other renewable sources.<br><br>The DPEIR's brief discussion of existing fuel usage focuses on the gasoline usage for light-duty vehicles. The DPEIR provides an estimate of diesel usage from trips in Fresno County in 2018 but does not state anything about the bases for that usage or provide any information about diesel and gasoline usage for trips that extend beyond Fresno County. Fresno's location in the heart of inland California hundreds of miles from California's heavily-populated coastal cities and ports and the significance of warehouse distribution centers, agricultural processing, and other industries that rely on shipping and transportation means that the DPEIR's environmental setting discussion must provide a description of the patterns of diesel-energy usage from truck traffic to and from Fresno, | This comment states that the EIR must include existing energy supplies and energy use patterns in order to permit a complete and accurate assessment of the project's energy impacts. The City's existing energy supplies related to electricity, natural gas, and fuel are discussed on pages 4.6.2 through 4.6.4 of the Draft PEIR. A discussion of gasoline and fuel consumption for Fresno County and the State of California is described on pages 4.6-3 and 4.6-4 of the Draft PEIR. The City's energy suppliers are consistent with the State's renewable energy standards as described on pages 4.6-7 through 4.6-8 of the Draft PEIR. |

## Table 3.A: Comments and Responses Matrix

| Letter/ Comment Number | Comment | Response |
|---|---|---|
| | including both trips within and beyond Fresno County. | |
| C3-27 | C. The DPEIR Fails to Include Information Necessary to Describe the Project and Support its Conclusions That The Project Will Not Have Significant Energy Impacts<br>CEQA requires that an EIR's analysis include "the project's energy use for all project phases and components, including transportation-related energy, during construction and operation." 14 C.C.R. § 1516.2(b). The analysis should consider not only building code compliance, but also other relevant factors such as "the project's size, location, orientation, equipment use and any renewable energy features that could be incorporated into the project." CEQA Guidelines Appendix F describes five topics that an EIR's project description and five topics which an EIR's energy impacts analysis must include where relevant. Appendix F(II)(A)(1-5) & (II)(C)(1- 5). The DPEIR fails to describe and analyze several aspects of the project's energy usage which are both relevant to the project and identified in Appendix F as important components of an EIR's energy impact analysis. The DPEIR further fails to support its findings that the project's energy-related impacts are less than significant with facts and clear analysis. | This comment suggests that the Draft PEIR should include an analysis of the project's energy use for all project phases and components, including transportation-related energy, during construction and operation. The Draft PEIR is programmatic in nature and does not evaluate specific development projects that could be approved under the approved General Plan. In addition, as discussed in Section 4.6.5.3 of the Draft PEIR, the approved General Plan includes numerous policies and implementation programs that are focused on improving the sustainability of the city, including reducing the consumption of non-renewable energy resources by requiring and encouraging conservation measures and the use of alternative energy sources (Policies RC-8-a through RC-8-k) and incentives for affordable housing providers, agencies, non-profit and market rate developers to use LEED and CalGreen Tier 1 or Tier 2 standards or third party equivalents (Policy HC-3-d). Moreover, the energy efficiency of buildings is expected to continue to increase and improve throughout the life of the project as new energy efficiency standards are established. Text changes to the Mobility and Transportation Element related to VMT analysis would not result in any physical improve-ments that would require the construction or operational energy use. Similarly, updates to the Greenhouse Gas Reduction Plan do not change the distribution or intensity of land uses and, therefore, would not result in any physical impacts that would affect energy. |
| C3-28 | 1. The DPEIR Fails to Describe Construction-Related Energy Impacts or Support Its Conclusion That Such Impacts Are Less Than Significant Without Mitigation<br>The DPEIR concludes that "[p]otential construction impacts would be less than significant, and no mitigation is required." The DPEIR arrives at this conclusion based on only two sentences of analysis that respectively state:<br>"Energy would be required during construction for the transportation of building materials, manufacturing of building materials, and the actual construction of buildings and infrastructure." DPEIR, 4.6-29, and;<br>"Energy use during construction of future development facilitated by the approved | As identified in the Draft PEIR, the proposed project includes text changes to the Mobility and Transportation Element, updates to the Greenhouse Gas Reduction Plan, and continued implementation of the approved General Plan. Text changes to the Mobility and Transportation Element related to VMT analysis would not result in any physical improvements that would require the construction of new energy generating facilities within the Planning Area. Similarly, updates to the Greenhouse Gas Reduction Plan do not change the distribution or intensity of land uses and, therefore, would not result in any physical impacts that would affect energy. |

## Table 3.A: Comments and Responses Matrix

| Letter/ Comment Number | Comment | Response |
|---|---|---|
| | General Plan would primarily involve gasoline and diesel fuel and would represent a short-term use of readily available resources." DPEIR, 4.6-30.<br>Other than a general assertion regarding the primary construction-related fuel sources, this analysis contains no information about the project's construction-related energy use requirements. The DPEIR does not provide any information about the amount of energy from different sources that may be expected to be used; the energy consuming equipment and processes; or the energy intensiveness of materials and equipment that may be expected for construction-related activities, as required by Appendix F. The DPEIR provides no factual basis for its conclusion that construction-related energy use would be derived from "readily available resources" nor does this conclusion support a finding that the project avoids the "inefficient, wasteful, and unnecessary consumption of energy" from construction-related activities.<br>The project plans for thousands of acres of new residential, commercial, and industrial development and the DPEIR contains no discussion of any policies or implementation measures included in the General Plan that would reduce energy consumption associated with construction. Therefore, it is likely that, without mitigation, the project will have significant energy-related construction impacts which require the identification and adoption of mitigation measures to avoid and reduce those impacts. | |
| C3-29 | 2. The DPEIR Fails to Support Its Conclusion That Project Operational Energy Impacts Are Less Than Significant Without Mitigation<br>The DPEIR states that project operational energy demand "includes natural gas and electricity" and indicates that the project's operational energy requirements and use efficiencies by amount and fuel type are less than significant.19 The DPEIR's conclusion is unfounded and its analysis fails to include the components required by CEQA. The DPEIR does not provide any information about the energy consuming equipment or processes which may be used or the energy intensiveness of activities which may occur during operation of buildings and facilities developed as a result of General Plan implementation. See Appendix F(II)(A)(1) & (II)(C)(1). The DPEIR also makes no effort to quantify the project's potential energy impacts or to explain why that is not possible. See Ukiah Citizens for Safety First v. City of Ukiah (2016) 248 Cal.App.4th 256. Without adequate information about the project's operational energy impacts, the DPEIR provides no factual basis for its finding that those impacts are less than significant.<br>In addition, the factors that the DPEIR relies on to support its conclusion that the | The Draft PEIR is programmatic in nature and does not evaluate specific development projects that could be approved in the future under the approved General Plan. In addition, as identified in the Draft PEIR, the proposed project includes text changes to the Mobility and Transportation Element, updates to the Greenhouse Gas Reduction Plan, and continued implementation of the approved General Plan. Text changes to the Mobility and Transportation Element related to VMT analysis would not result in any physical improvements that would require the construction of new energy generating facilities within the Planning Area. Similarly, updates to the Greenhouse Gas Reduction Plan do not change the distribution or intensity of land uses and, therefore, would not result in any physical impacts that would affect energy.<br>In addition, as discussed in Section 4.6.5.3 of the Draft PEIR, the approved General Plan includes numerous policies and |

## Table 3.A: Comments and Responses Matrix

| Letter/ Comment Number | Comment | Response |
|---|---|---|
| | project's operational energy impacts are less than significant and do not require mitigation do not in fact demonstrate that the project will not result in wasteful, inefficient, or unnecessary consumption of energy and that the project's energy impacts are less than significant. The General Plan policies which the DPEIR's analysis of the project's operational energy impacts cites – Policies RC-8-a through k and Policy HC-3-d – contain no clear or enforceable requirements or commitments that ensure the reduction or avoidance of unnecessary energy consumption. DPEIR, 4.6-30, 33. Rather, those policies use discretionary and vague terms and descriptions without guarantees, enforcement mechanisms or timelines to ensure implementation. In most cases, the policies fail to identify specific actions to be taken and lack quantified targets relating to the amount of energy to be saved. For example, Policy RC-8-b calls on the City to "[s]trive to reduce per capita residential electricity consumption," Policy RC-8-c directs the City to "[c]onsider providing an incentive program for new buildings that exceed California Energy Code requirements," and Policy RC-8-I states, "[a]dopt and implement a program to increase the use of renewable energy to meet a given percentage of the city's peak electrical load in a given timeframe." Italics added. Policy HC-3-d in turn states, "[p]rovide appropriate incentives for affordable housing providers, agencies, non-profit, and market-rate developers to use LEED and CalGreen Tier 1 or Tier 2 standards." DPEIR, 4.3-34. Policy HC-3- d includes a commentary that "The City will publicize the health, environmental, and long term economic and maintenance benefits of applying LEED, CalGreen [or] third party equivalents to projects in Fresno." These and the other policies cited by the DPEIR do not demonstrate that any reduction in project energy emissions will occur compared to emissions levels that would occur without those policies nor do they show that the project's energy impacts will be less than significant and that mitigation is not required.<br><br>The DPEIR's basis its conclusion that the project's operational impacts would be less than significant in part on its assertion that "potential improvements" to energy and natural gas "facilities" for future projects which have not yet been proposed would be identified at the time such projects are considered. 4.6-31. The use of the term "facilities" in this sentence is unclear, and we assume it refers to all use of energy and natural gas in future projects which have yet to be proposed. That said, the DPEIR provides no information about the nature or impact of such improvements as they relate to project operational energy usage nor does it provide a factual basis for this assertion. An EIR must contain facts and analysis, not just an agency's bare conclusions or opinions. Sierra Club v. | implementation programs that are focused on improving the sustainability of the city, including reducing the consumption of non-renewable energy resources by requiring and encouraging conservation measures and the use of alternative energy sources (Policies RC-8-a through RC-8-k) and incentives for affordable housing providers, agencies, non-profit and market rate developers to use LEED and CalGreen Tier 1 or Tier 2 standards or third party equivalents (Policy HC-3-d). Moreover, the energy efficiency of buildings is expected to continue to increase and improve throughout the life of the project as new energy efficiency standards are established. |

## Table 3.A: Comments and Responses Matrix

| Letter/ Comment Number | Comment | Response |
|---|---|---|
| | County of Fresno (2018) 6C5th 502, 522. As such, the DPEIR's conclusion that future projects that result from General Plan implementation will reflect unidentified "potential improvements" to energy usage does not support the DPEIR's finding that project operational energy impacts are less than significant.<br><br>The also DPEIR states that projects that occur as a result of General Plan implementation will be required to meet or California Energy Code building efficiency standards and the CalGreen Code as a reason why project energy impacts will be less than significant. Yet a requirement that a project comply with the Building Code does not, by itself, constitute an adequate assessment of mitigation measures that can be taken to address the energy impacts that occurring during construction and operation of a project. California Clean Energy Committee v. City of Woodland (2014) 225 Cal.App.4th 173. Likewise, a statement that a project will be required to comply with Energy Code requirements does not in itself mean that project impacts are less than significant. And in this case, the DPEIR does not provide support for its assertion that future projects will be required to comply with the Energy Code by referring to any policies or mitigation measures that contain this requirement and describing how and at what stage the City will ensure the implementation of such requirement. Future projects that qualify for "by right" under the City's Development Code will not be required to undergo further environmental review under CEQA and will not be subject to additional mitigation measures to require compliance with Energy Code building efficiency standards. | |
| C3-30 | D. The DPEIR Fails to Acknowledge or Mitigate Significant Indirect Energy-Related Impacts Resulting from New Construction<br><br>As mentioned in this section above, the project stands to significantly increase energy demand within existing residential, commercial, mixed-use and public facilities buildings due to the construction of structures on parcels that are currently vacant or are used for agriculture. New development, and in particular, the construction of large concrete distribution facilities in the Southern portion of the planning area, will, without mitigation, radiate heat into surrounding areas and increases ambient air temperatures and contribute to higher temperatures during the evenings. The increase in air temperatures means that air conditioning units in nearby structures used by people will need to consume more energy in order to cool the structures to desired temperatures. Since temperatures in Fresno routinely reach highs of well over 100 degrees in the summer, energy demand relating to air conditioners is already high in the Planning Area compared to other parts of the state and further increases in energy demand are likely to | The Draft PEIR is programmatic in nature and does not evaluate specific development projects that could be approved in the future under the approved General Plan. In addition, as identified in the Draft PEIR, the proposed project includes text changes to the Mobility and Transportation Element, updates to the Greenhouse Gas Reduction Plan, and continued implementation of the approved General Plan. Text changes to the Mobility and Transportation Element related to VMT analysis would not result in any physical improvements that would require the construction of new energy generating facilities within the Planning Area. Similarly, updates to the Greenhouse Gas Reduction Plan do not change the distribution or intensity of land uses and, therefore, would not result in any physical impacts that would affect energy. |

## Table 3.A: Comments and Responses Matrix

| Letter/ Comment Number | Comment | Response |
|---|---|---|
| | be significant. Given this and the fact that the General Plan plans for approximately 6,000 acres of industrial and warehouse development in and surrounding South Fresno neighborhoods that are occupied by thousands of residents and are home to schools, utility districts, commercial, and employment centers, the project's impact on increased energy usage due to AC units will likely be significant. | |
| C3-31 | E. The DPEIR's Analysis of the Project's Transportation-Related Energy Impacts is Inadequate<br>CEQA Guidelines Appendix F requires that an EIR's energy impact analysis include the "project's energy requirements and its energy use efficiencies by amount and fuel type for each stage of the project," as well as the project's "project transportation energy use requirements and its overall use of efficient transportation alternatives." Appendix F(II)(C)(1)&(6). The DPEIR however makes no attempt to meet these requirements. Instead, it shirks its responsibility to do so, stating that "[t]he project would result in energy usage associated with gasoline to fuel project-related trips (i.e., the use of motor vehicles). When evaluating a long-range planning project, forecasting future travel methods and gasoline use is too speculative and not appropriate or feasible." DPEIR, 4.6-33. The DPEIR provides no explanation for why any assessment of future travel methods and/or gasoline use is too speculative and not feasible or why the DPEIR cannot otherwise comply with the energy impacts analysis requirements set forth in Appendix F. This failure violates CEQA. See Berkeley Keep Jets Over the Bay Comm. v. Board of Port Comm'rs (2001) 91 CA.4th 1344, 1370.<br>The project-related VMT forecasts the DPEIR provides have limited value in assisting the reader in understanding the nature and the significance of the Project's transportation-related impacts. In support of its conclusion that the project will not result in wasteful, inefficient, or unnecessary use of energy, the DPEIR states:<br>"Although the measures of VMT in per capita terms increase from existing conditions with the City's General Plan Update, the city's VMT is below that of the regional average and the propose project would not result in a significant impact on gasoline demand."<br>The fact that the DPEIR's forecasts show average VMT per capita in the City of Fresno as less than the average VMT per capita for Fresno County does not support the conclusion that project implementation would not result in the wasteful use of energy. The City and County of Fresno have distinct residential and employment land use patterns and | As discussed in the Draft PEIR, although the measures of VMT in per capita terms increase from existing conditions with the City's General Plan Update, the city's VMT is below that of the regional average and the proposed project would not result in a significant impact on gasoline demand. Moreover, the fuel efficiency of vehicles is expected to continue to increase and improve throughout the life of the project as new fuel economy standards are established.<br>In addition, as identified in the Draft PEIR, continued implementation of the approved General Plan aims to promote mixed-use development and encourage alternative modes of transportation to reduce vehicle trip lengths and reliance on the automobile, which in turn, would reduce the transportation energy demand in the Planning Area. Continued implementation of the approved General Plan also encourages development of housing near employment and transportation, which would lead to a potential decrease in VMT. Continued implementation of the approved General Plan would also promote land use patterns that would improve walking and bicycling facilities to be more prominent, comfortable, and safe throughout the city. In addition, the continued implementation of the approved General Plan would support the development of a network of integrated charging and alternate fuel station for both public and private vehicles, and if feasible, open up municipal stations to the public as part of network development (Policy RC-8-j) that would also serve to reduce the overall transportation energy demand.<br>The Draft PEIR also identifies that transit service is now available in Fresno and long-term development trends for increasing density and mixes of uses can lead to improved transit service in areas of the city over time. Higher densities when combined with pedestrian orientation encourage transit use. A key factor is that both ends of |

## Table 3.A: Comments and Responses Matrix

| Letter/ Comment Number | Comment | Response |
|---|---|---|
| | transportation options available to residents and workers. For instance, many residents in rural Fresno employed in the agricultural sector must travel significant distances each day to and from work on farms which are widely dispersed across the region as well as to meet their everyday household needs, as many rural communities, including disadvantaged unincorporated communities, lack grocery stores, health clinics, libraries, and other locations to obtain essential goods and services. Residents in the City of Fresno may on average need to drive significantly shorter distances in order to reach their place of employment and/or obtain essential goods and services. In addition, the limited operations of Fresno County's Rural Transit Service, which reach many communities once or twice a day, makes using public transit infeasible for many residents, whereas residents in the City of Fresno have greater access to more frequent service to meet their mobility needs. Therefore, whether a given VMT level may be indicate "efficient" energy usage differs based on context and comparison of the City and County of Fresno's average VMT levels does not provide useful guidance to assess the project's energy impacts.<br>The DPEIR's general discussion of the General Plan's support for active transportation also does not demonstrate that the project will not result in the wasteful or unnecessary consumption of energy. The discussion only mentions one specific policy, Policy RC-8-j, which provides that the City will "[s]upport the development of a network of integrated charging and alternate fuel stations for both public and private vehicles, and if feasible, open up municipal stations to the public as part of network development." DPEIR, 4.6-12, italics added. Like other policies that the DPEIR relies on to support its findings that impacts will be less than significant, Policy RC-8-j provides no details about what "support" the city will provide for the charging network; when that support will be provided; any specifics about the extent of that network or the nature of charging infrastructure, including whether the network will serve trucks as well as passenger vehicles; and how the City will determine whether to open municipal stations to the public as part of the network. The DPEIR's general description of the General Plan's support for alternative transportation apart from motor vehicles also lacks the specificity to show that General Plan implementation will not result in energy waste. This general description also does not address if and how general plan policies ensure efficient transportation-related energy use for truck and car trips associated with industrial development in South Fresno.<br>And, as discussed above, while Table 4.16-2 includes forecasts for total employment | the transit trip must be walkable and have the potential to serve reasonably large numbers of transit riders. The City's BRT system combined with plans to increase development densities at BRT stations and along the corridor are critical elements of the City's transit oriented development strategy. The approved General Plan also encourages alternative transit options through the creation of bicycle and pedestrian paths to improve the bikeability and walkability in the Planning Area. |

## Table 3.A: Comments and Responses Matrix

| Letter/ Comment Number | Comment | Response |
|---|---|---|
| | VMT, the DPEIR does not state whether this figure includes VMT resulting from truck and car trips made by employees during the course of work (rather than just commute trips); truck trips made to and from commercial and industrial facilities, such as warehouse distribution centers and agricultural processing facilities, by individuals who do not reside in and/or are not employed within the Planning Area; and VMT portions of truck and car trips that extend outside of Fresno. DPEIR, 4.6-33.<br><br>The DPEIR also makes no attempt to discuss transportation energy use requirements that may be expected (for instance, projections relating to project-related VMT attributable to cars, trucks, and/or public transit and their respective projected energy requirements) nor does it discuss the use of "efficient transportation alternatives." Efficient transportation alternatives relevant to General Plan implementation that should be discussed include the extent to which clean energy vehicles, such as electric or hydrogen fuel cell vehicles may be utilized as opposed to vehicles reliant upon diesel or gasoline. In addition, the DPEIR's discussion of the project's energy impacts, as well as its discussion of the environmental setting, completely omits any discussion of impacts associated with the use of freight. As the DPEIR notes elsewhere, both the Union Pacific and BNSF rail lines in Fresno carry freight traffic, with the Union Pacific line carrying exclusively freight. 4.13- 8. The U.S. Department of Transportation's Bureau of Transportation indicates that rail freight service was responsible for the consumption of 507 trillion BTU of distillate/diesel fuel nationwide. 20 The DPEIR must disclose the project's anticipated impacts on the use of freight, in addition to underlying energy demand associated with freight in Fresno. The presence of two freight-carrying rail lines and a BNSF intermodal hub center in Fresno and the General Plan's dedication of extensive land for industrial development, including agricultural processing and warehouse distribution uses, indicate that the project's freight-related energy impacts are potentially significant.<br><br>The City must revise the DPEIR to accurately and completely describe the project's likely energy impacts and must provide factual bases justifying its conclusions regarding the energy impact significance levels. Given the regional scope and multi-decade nature of this project; the extensive development it contemplates; and the lack of clear and enforceable requirements that will ensure the reduction and avoidance of unnecessary and wasteful energy usage, the project will likely result in significant energy impacts which require mitigation. Pub. Res. Code § 21100(b)(3); 14 C.C.R. § 1516.2(b) ("If analysis of the project's energy use reveals that the project may result in significant environ-mental effects due to wasteful, inefficient, or unnecessary use of energy, or wasteful use | |

## Table 3.A: Comments and Responses Matrix

| Letter/ Comment Number | Comment | Response |
|---|---|---|
| | of energy resources, the EIR shall mitigate that energy use"). Mitigation measures identified must comply with the specific mitigation requirements set forth in Public Resources Code Section 21000(b)(3), CEQA Guidelines Section 15126.4(a)(1), and Appendix F(II)(D)(1-5). See also People v. County of Kern (1976) 62 CA.3d 761, 774 (finding an EIR deficient that failed to include a detailed statement setting forth the mitigation measures proposed to reduce wasteful, inefficient, and unnecessary consumption of energy as required by section 21100(c) and CEQA Guidelines section 15143). | |
| C3-32 | IX. The DPEIR Fails to Acknowledge the Project's Significant Land Use Impacts Resulting from the General Plan's Division of Established Communities<br>This DPEIR's analysis of the General Plan's potential to result in the division of established communities fails to include relevant information about the likely nature and extent of such impacts, and the DPEIR fails to acknowledge the significance of these impacts on established communities, including in particular rural and fringe communities located just outside of existing City limits and on the outskirts of the Planning Area as well as certain neighborhoods within existing City limits. The DPEIR's brief analysis of this impact category states that "future development could create established communities within rural communities that are located in the outer areas of the Planning Area," and that "[i]t is anticipated that as future development in accordance with the approved General Plan expands within the rural areas, there could be continuing conflicts between existing and new land uses, which could create a division of existing rural communities." DPEIR, 4.11-28. The DPEIR then goes on to state that objectives and policies contained within the General Plan would "lessen the impact of dividing established communities by increasing or maintaining connectivity to the surrounding area." Id. This analysis does not acknowledge that in addition to new residential development in and around existing rural communities, the General Plan also plans for extensive industrial development within and around existing neighborhoods and communities. The General Plan Land Use Map designates areas surrounding and up to existing residential land uses for industrial development and also designates land with existing residential uses and even entire established communities for industrial development. Residential neighborhoods and communities designated for industrial development include but are not limited to the following:<br>● the community of Daleville | Please refer to Master Response: Project Description and Baseline Conditions. As discussed in the Master Response and discussed in Section 4.11, Land Use and Planning, of the Draft PEIR, the land use plan, including industrial land uses, as identified in the approved General Plan, has already been approved as part of General Plan adoption and subsequent General Plan amendments that have occurred since 2014. Each of these discretionary actions were reviewed pursuant to CEQA as part of the project approval process. No land use changes would occur as a result of the proposed project. No further response is required. |

## Table 3.A: Comments and Responses Matrix

| Letter/ Comment Number | Comment | Response |
|---|---|---|
| | ● the community bounded by East Central, South Orange, and East Cedar Avenues<br>● the portion of the community of Calwa located to the South of East Jensen Avenue<br>● the community bounded by South Peach Avenue on the East and East Jensen Avenue on the North<br>● the community bounded by South Rose, East Kaviland, and East Grove Avenue<br>● a mobile home park located in the Jane Addams neighborhood of the City of Fresno<br>The General Plan's designation of these and other communities for industrial land uses is explicitly a policy designed to divide established residential communities and eliminate and replace those communities with industrial development. In addition, the designation of homes and other community-serving land uses for industrial development is likely to impair effected property owners' ability to successfully obtain credit for home maintenance, to obtain permits to make improvements on their property, and to sell their property to others' for residential or other community-oriented uses. The DPEIR's designation of entire residential neighborhoods for industrial land use necessitates a finding by the DPEIR that the project will result in a significant impact as a result of the division of existing communities. The DPEIR must also acknowledge the severe nature and magnitude of the impact that the division and elimination of multiple entire communities through incremental development constitutes.<br>In addition, the DPEIR must disclose the project's the potential for the division of existing communities as a result of industrial land use designations and General Plan policies supporting investment in shovel ready development opportunities and permit streamlining for "employment" land uses. See e.g., General Plan, Ch. 2-3, 22 (Policies ED-1-e & j), 24 (ED-3-b), 27 (ED-5-c). By facilitating and promoting intensive industrial development and the truck and car traffic that those uses generate adjacent and near to residential communities, the General Plan adversely impacts the experience of occupants of existing housing and community-serving land uses (e.g., schools, places of worship, corner stores) in those areas and undermines the short and long-term viability of housing. Since the General Plan's adoption, the City has adopted Official Plan Lines for East Central Avenue that provide for encroachment by the City into residential property in order to allow road widening to occur to facilitate heavy truck and car traffic generated by the new industrial and warehouse development planned for by the General Plan. Road widening that allows traffic closer to homes and diminishes lot size is a | |

## Table 3.A: Comments and Responses Matrix

| Letter/ Comment Number | Comment | Response |
|---|---|---|
| | foreseeable impact of the General Plan that further promotes the division of existing communities by undermining the viability of housing due to impacts on housing quality associated with nearby heavy truck and car traffic and incentivizing residents to sell or abandon their homes to seek more suitable housing. The City must revise the DPEIR to disclose, analyze and avoid the significant impact.<br><br>With respect to the General Plan objectives and policies which the DPEIR lists as evidence that project impacts associated with the division of existing communities will not be significant, the DPEIR provides no analysis of those objectives and policies to explain why they support that conclusion. The DPEIR simply states that they would "reduce the potential to physically divide an established community to a less than significant level" and that "[n]o mitigation is required." DPEIR, 4.11-28. These policies appear to do nothing to reduce the likelihood that the General Plan's industrial land use designations and policies will result in the division and replacement of existing communities with industrial land uses. For example, Objective UF-8 states, "Develop each of Downtown's neighborhoods and districts, according to its unique character,"; Policy UF-12-a provides, "[d]esign land uses and integrate development site plans along BRT corridors, with transit-oriented development that supports transit ridership"21; and Policy UF-12-g directs the City to establish design standards for mixed-used activity centers (none of which are located within the areas designated purely for industrial development listed in this section above). Policy LU-1-b calls for the creation of "appropriate transitions or buffers between new development with existing uses," yet the General Plan Land Use Map, as explained above, provide for no buffers or transition zones between areas designated for heavy industrial land use and existing residential and community-serving land uses. And as explained above in this this letter, the Development Code also lacks standards to create buffers and ensure that existing residential neighborhoods are protected from new industrial and warehouse development. Thus, the DPEIR fails to support its conclusion that General Plan impacts stemming from the division of existing communities are less than significant and the General Plan itself demonstrates unequivocally that those impacts are significant and require mitigation. The City must revise and recirculate the DPEIR to correct this failing. | |

## Table 3.A: Comments and Responses Matrix

| Letter/ Comment Number | Comment | Response |
|---|---|---|
| C3-33 | X. The DPEIR's Analysis of Project Impacts to Population and Housing is Deficient, Because it Fails to Acknowledge the Project's Potential to Displace Substantial Numbers of People<br><br>The DPEIR's analysis of the Project's potential to displace existing people or housing fails to acknowledge or discuss the potential for displacement associated with industrial development planned for by the project and fails to provide facts to support its assertions that General Plan policies will mitigate any displacement impacts to less than significant levels. DPEIR, 4.14-14, 15. As discussed in this letter above, the General Plan designates entire residential communities (both within and outside of current City limits) and land up to and surrounding housing for industrial development. As a result of the designation of residential uses housing to industrial land uses. And, also as discussed above in this letter, the designation of land adjacent to housing for industrial uses and the use of local roadways where housing is located for heavy truck and car traffic serving those industrial uses will contribute to the significant deterioration of housing quality and the relocation of neighborhood residents to more suitable housing. The elimination of housing stock and the relocation of residents from neighborhoods designated for industrial development will put pressure on the housing supply. These housing supply impacts may be expected to occur not only in the City of Fresno but also elsewhere in Fresno County and beyond, given that most of the housing stock impacted by the General Plan's industrial land use designations are located outside of City limits and near the edge of the Planning Area and residents who relocate will not necessarily move to an area within the Planning Area. Notably, the Study Area that the DPEIR adopts for this analysis – the Planning Area – fails to allow for the consideration of the impacts of that displacement outside of the Planning in Area in Fresno County and beyond. See DPEIR, 4.14-2.<br><br>The DPEIR dismisses the project's potential displacement impacts by stating that the General Plan implementation "would also result in the development of a net increase in units when compared to the existing inventory" and that the housing units available as replacement units for those that could be removed as a result of General Plan implementation would be increased. DPEIR, 4.14-15, 15. However, the DPEIR fails to state how many units may be expected to be developed with General Plan implementation and how this compares to the number of units which may be lost due to displacement coupled with the demand for housing among existing and future residents. In addition, the DPEIR says nothing of the expected price levels of new housing development and how that compares to price levels which residents who may be displaced may be able to afford. | Please refer to Master Response: Project Description and Baseline Conditions. The proposed project does not propose land use changes that would result in potentially significant impacts related to displacing substantial numbers of people. The proposed project updates the General Plan to reflect already adopted plans, adds new text related to VMT, and updates the GHG Reduction Plan. It does not include any physical changes that would displace any persons. As future residential projects are proposed under the approved General Plan, the City will conduct additional, project-level analysis to determine whether substantial numbers of people would be displaced. |

## Table 3.A: Comments and Responses Matrix

| Letter/ Comment Number | Comment | Response |
|---|---|---|
| | According to the City of Fresno's 2019 and 2018 Housing Element Annual Progress Reports, new residential development in the City of Fresno has primarily served above-moderate income households. On the other hand, South Fresno neighborhoods which the General Plan designates for heavy industrial development have high poverty rates, meaning that many residents in these neighborhoods are unlikely to be able to afford new residential development that occurs as a result of General Plan implementation. | |
| C3-34 | In addition, the DPEIR's statement that a relocation analysis would be required to be prepared "[p]rior to any displacement" is inaccurate and misleading. First, a displacement study will not be required prior to relocation of residents who move to avoid the impacts of new industrial development and roadway expansion or for residents who chose to sell their homes to a buyer that develops the land for industrial uses. Second, pursuant to General Plan policies promoting permit streamlining for "employment" land uses, much new industrial development occurs by right under the Development Code and is not subject to CEQA or a displacement analysis that the law might otherwise trigger. | The analysis included in the Draft PEIR does not include any land use changes. A relocation analysis, as discussed in the Draft PEIR, would be required for the implementation of future projects. The Draft PEIR does not include an analysis of potential relocation of residents as a result of existing conditions or the implementation of projects that have been previously approved. The City will be required to complete subsequent CEQA analyses for future discretionary projects to determine the potential significance of impacts on residential units in the city. Further, CEQA does not require analysis of future relocation decisions based on personal choices unrelated to a proposed project. |
| C3-35 | Finally, the DPEIR also states that several Housing Element policies and objectives would "reduce housing impacts," and "avoid the need for construction of replacement housing due to the development of a net increase of new housing units" and that therefore "[n]o mitigation would be required." DPEIR, 4.14-15. This analysis fails to contain facts necessary to support its conclusion. First, the DPEIR does not make the connection between the housing element policies to which it cites and the conclusion that the General Plan's displacement impacts would be reduced to less than significant levels such that mitigation would not be required. The DPEIR does not explain or demonstrate (1) how or why the specific policies cited would lead to an actual reduction in impacts, (2) the nature and scope of the reduction in housing impacts which may be expected to occur and/or the nature and number of new housing units which may be developed, or (3) how the DPEIR determined that the reduction in housing impacts and/or the development of new units as a result of the housing element objectives and policies would reduce housing and population displacement impacts to a less than significant level. The analysis also does not explain why implementation of housing element policy and objectives in and of themselves will reduce potential displacement impacts to less than significant levels, taking into consideration existing lower-income housing needs in | As stated beginning on page 4.14-14 of the Draft PEIR, the proposed project assumes the continued implementation of the previously approved General Plan land use plan that would result in the development of vacant land as well as development that could also occur within areas that would be redeveloped. However, none of this future development is proposed as part of the proposed project. For redevelopment projects, the continued implementation of the approved General Plan could potentially result in removal of existing residential units. However, the continued implementation of the approved General plan would also result in the development of a net increase of new housing units when compared to the existing inventory. Therefore, implementation of the project would result in an increase of housing units available as replacement for those units that could potentially be removed during future development under the continued implementation of the approved General Plan. The Draft PEIR cites several policies of the Housing Element including Policy H-1-a which requires the City implement land use policies and |

## Table 3.A: Comments and Responses Matrix

| Letter/ Comment Number | Comment | Response |
|---|---|---|
| | Fresno, which include the need for more than 15,000 units for lower-income households; increasing employee to housing ratios identified by the DPEIR, and the very low levels of lower-income housing production compared to the need that has occurred as a result of Housing Element implementation to date. DPEIR, 4.14-3, 7 (identifying the City's current lower-income RHNA of 8,955 units and the City's carry-over RHNA of 6,476 units);<br>The City must revise the DPEIR to accurately and completely acknowledge and disclose the project's potential to displace substantial numbers of existing people and units of housing in existing residential neighborhoods that are planned for industrial development. Given the apparent significance of these impacts, the revised DPEIR must include feasible and enforceable mitigation measures to reduce and avoid these impacts. | standards that allow for a range of residential densities and housing types that will enable households of all types and income levels the opportunity to find suitable ownership or rental housing. Because the proposed project does not change any land uses and relies on previous CEQA determinations regarding the change in land use as already approved under the existing General Plan, when future discretionary actions occur, the City will be required to complete subsequent CEQA analyses to determine the potential significance of impacts on residential units in the city. |
| C3-36 | XII. The DPEIR Fails to Disclose & Identify Adequate Mitigation to Minimize the Project's Groundwater Impacts<br>A. The DPEIR Fails to Disclose or Adopt Adequate Mitigation to Minimize the Project's Groundwater Supply Impacts on Neighborhoods Reliant on Well Water The Planning Area is located in the Kings Groundwater Subbasin which is designated by the State Water Resources Control Department as a "critically over-drafted high priority basin." North Fork Kings Groundwater Sustainability Agency "Groundwater Sustainability Plan in Compliance with the Sustainable Groundwater Management Act," (2019), p. 1-1&2.22 The subbasin was given its high-priority status as a result of the removal of millions of acre-feet of groundwater from subsurface storage as a result of groundwater pumping exceeding recharge. Id., p. 1-2. The DPEIR acknowledges that "the City is creating an overdraft of the Kings Groundwater Subbasin." 4.10-21. The adopted 2019 Groundwater Sustainability Plan (GSP) for the Kings Subbasin notes that the "trend of groundwater overdraft was accelerated in recent years by increased groundwater pumping as a result of significantly reduced surface water deliveries" during the drought from 2012 and 2016. Id. Given this reality, one would expect the DPEIR to include a thorough discussion of the project's potentially significant impacts on groundwater and propose robust mitigation measures to reduce groundwater impacts however feasible. This is not the case.<br>First, the DPEIR contains no discussion about the current groundwater availability for residential communities and households which rely on domestic wells for their everyday water needs and the project's potential groundwater impacts on these communities and households. The DPEIR provides some data from City wells about groundwater level | As discussed in Section 4.10, Hydrology and Water Quality, the City is member agency of the North Kings Groundwater Sustainability Agency (NKGSA). In November 2019, the NKGSA adopted the North Kings Groundwater Sustainability Plan (GSP) with the sustainability goal to ensure that by 2040 the Kings Groundwater Subbasin (Kings Subbasin), of which Fresno is located, is being managed in a sustainable manner to maintain a reliable water supply by balancing water demand with available water supply. By the year 2040, the City and the NKGSA anticipates that groundwater operations (i.e., subsurface inflows and outflows) would be balanced and subsurface flows will not be directed to the Planning Area. As a result, the underground movement of water within the aquifer is not anticipated to affect domestic wells within residential communities within close proximity of the Planning Area. |

## Table 3.A: Comments and Responses Matrix

| Letter/ Comment Number | Comment | Response |
|---|---|---|
| | decline rates since 1990 in certain areas within the City that range from .5 to three feet per year. 4.10-3. This data does not include unincorporated areas within the Planning Area and the DPEIR does not indicate the range of years which the data represents and how reflective the decline rates are of recent trends. Between 2012 and 2016, numerous households and entire neighborhoods located in unincorporated County in the Southcentral and Southwestern portions of the Planning Area lost access to water in their homes as their wells ran dry. These households were forced to buy bottled water, rely on emergency connections to neighbors, seek emergency assistance such as the installation of water tanks from the state and non-profit organizations like Self-Help Enterprises, and in the case of households with the financial resources to do so, spend thousands of dollars to drill deeper wells. The DPEIR asserts that the City's continued participation in the North Kings Groundwater Sustainability Agency (GSA) and compliance with the Subbasin GSP will result in balanced water demand by 2040. 4.10-21, 22. Yet a balanced water demand in 2040 does not address significant impacts on households and communities impacted by groundwater depletion that occur within the next twenty years. For homes with shallow domestic wells, reductions in groundwater levels by just a few feet can mean the difference between flowing and dry taps. A potentially balanced water demand in 20 years will not alleviate the significant impact that occurs should households lose access to water supply in the present. | |
| C3-37 | The South Fresno neighborhoods reliant upon domestic groundwater are disproportionately lower-income and disproportionately comprised of people of color, immigrants, and people who speak languages other than English compared to other parts of the Planning Area. The DPEIR's failure to disclose, analyze, and adopt feasible and enforceable mitigation measures to address the project's potentially significant impacts on groundwater supply in households that rely on domestic wells disproportionately adversely impacts protected classes and potentially violates civil rights and fair housing laws. | Please refer to response to Comment C3-36. The General Plan Planning Area is located within the Kings Subbasin as are South Fresno neighborhoods that are reliant on domestic ground water. The 2040 groundwater projections for the Kings Subbasin anticipate that groundwater pumping and recharge of the subbasin will be balanced. As a result, neighborhoods in South Fresno, as they continue to source groundwater from domestic wells, would be located within a subbasin expected to be balanced. Please see the discussion of groundwater supplies beginning on page 4.10-21 of the Draft PEIR, and overall water supplies starting on page 4.17-28 of the Draft PEIR. |

## Table 3.A: Comments and Responses Matrix

| Letter/ Comment Number | Comment | Response |
|---|---|---|
| C3-38 | Second, while the GSP recognizes that recent severe and prolonged drought accelerated groundwater pumping in the Kings Subbasin, the DPEIR does not mention this in its discussion of the environmental setting nor does it disclose or discuss the likelihood of future drought conditions, water supply reductions, and increased groundwater demand that will occur as a result of climate change.23 Without information relating to the impacts of climate change on groundwater supply between the present and the potential attainment of balanced water demand in 2040, the DPEIR fails to accurately inform decision-makers of the nature and magnitude of the project's significant impacts on groundwater supplies in the Kings Subbasin and the Planning Area as a whole and on domestic well users who are the most vulnerable to groundwater depletion.<br><br>Third, the DPEIR's calculations of the amount of water that will be available to the City of Fresno as buildout occurs do not appear to take into account groundwater depletion that occurs outside of City limits. The GSP does not contain measures to limit groundwater pumping and pumping that occurs outside of City limits may negatively impact subsurface inflow from neighboring areas and recharge supplies. The DPEIR relies on estimates of subsurface inflow and recharge supplies for its calculations of the water supply available to the City and the amount of groundwater that may be necessary. The DPEIR's failure to account for groundwater pumping outside of City limits therefore has the result of potentially inflating the DPEIR's calculation of available water supplies and understating future groundwater demand in the Planning Area. These calculation errors would artificially lessen the apparent significance of the project's impacts on groundwater supplies. The City must revise the DPEIR to its calculations with respect to groundwater pumping outside of City limits and its effects on subsurface inflow and recharge supplies and correct the DPEIR's calculations and analysis if they failed to account for the pumping. | The Draft PEIR relied on estimates of groundwater pumping provided by the City's Urban Water Management Plan (UWMP) and the North Kings GSP. Both documents relied on several years of data, including drought years and years of readily available water, in order to anticipate future water demand, future water availability, and deliveries from water providers. The North Kings GSP provides the most recent estimate of water demand and availability with the goal of halting groundwater overdraft and bringing groundwater basins into balanced levels of pumping and recharge. The population estimates included in both documents is consistent with the estimated population at full buildout of the approved General Plan. However, the North Kings GSP will be updated by the NKGSA with yearly reports and the City will update the UWMP every five years to reflect conditions as they change. |
| C3-39 | Fourth and finally, the one mitigation measure that the DPEIR proposes, Mitigation Measure HYHD-2.1, will not minimize the project's impact on groundwater supplies and will not address impacts to households on domestic wells over the next twenty years. The measure provides only that the City will "continue to be an active participant in the North Fork Kings [GSA] and the implementation of the North Fork Kings [GSP]..." The commitment for the City to be an "active participant" in the GSA and GSP implementation is undefined and lacks clear actions that the City will take that will actually reduce groundwater supply depletion. Numerous feasible and effective mitigation options to minimize this impact exist, including commitments by the City to decrease groundwater | As stated on page 4.10-22 of the Draft PEIR, continued implementation of the approved General Plan could result in significant impacts to groundwater levels within the Kings Sub-basin if the increase in water demand is met through an increase of water supply from increased groundwater pumping. However, as discussed throughout the Hydrology and Water Quality section, the Sustainable Groundwater Management Act (SGMA) requires that governments and water agencies located in high and medium priority basins halt groundwater overdraft and bring groundwater basins into balanced |

## Table 3.A: Comments and Responses Matrix

| Letter/ Comment Number | Comment | Response |
|---|---|---|
| | pumping, switch to other sources of water, and ensure the City does not exceed the amount it can consume within the GSA boundaries while not depleting supplies (as it is currently doing). The DPEIR must consider each of these mitigation options and incorporate them as enforceable mitigation measures which specify the actions that the City will take to ensure that the project's groundwater impacts are minimized. Pub. Res. Code §§ 21002.1(a), 21100(b)(2), 21081.6(b); 14 C.C.R. 15126.4.(a)(2). Further, the DPEIR also must identify specific mitigation measures to minimize groundwater supply depletion impacts on households on domestic wells. Such measures may include but are not limited to the following:<br>● a commitment to work proactively to facilitate the connection by such households to City water supplies, including by seeking and offering financial assistance and waiving and/or reducing fees to make it financially feasible for lower-income households to connect;<br>● the incorporation of households on domestic wells into City planning for infrastructure extension projects serving new development and/or requirements that new development which will contribute to the City's overall water demand pay a fee to support the connection of households on domestic wells. | level of pumping and recharge. As discussed above in response to Comment C3-38, the population estimates included in the North Kings GSP is consistent with the estimated population at full buildout but the North Kings GSP looks at conditions until 2040. Mitigation measure HYD-2.1 requires the City to be an active participant in the NKGSA in order to complete the projects identified in the North Kings GSP to ensure that the basin is balanced. Completing the projects identified in the North Kings GSP will assist in the overall achievement of groundwater balance that will reduce potential impacts on household domestic wells because those wells are located within the same groundwater basis as the City. No further response is required. |
| C3-40 | Thank you for your consideration of our comments. If you would like to find a time to discuss them, please contact me at awerner@leadershipcounsel.org. We look forward to working with the City to ensure its adoption of a Final Programmatic Environmental Impact Report which complies with CEQA and other applicable legal mandates and advances the legislature's goal of ensuring access to a quality environment and decent home for all Californians. | This comment provides a closing to the comment letter, and does not question the adequacy of the analysis in the Draft PEIR. No further response is required. |

**This page intentionally left blank**

# 4.0 DRAFT PEIR TEXT REVISIONS

This chapter presents specific changes to the text of the Draft PEIR that are being made to clarify any errors, omissions, or misinterpretation of materials in the Draft PEIR in response to comments received during the public review period. In no case do these revisions result in a greater number of impacts or impacts of a greater severity than those set forth in the Draft PEIR. Further, the clarifications and corrections provide in the following revisions do not constitute significant new information requiring recirculation of the Draft PEIR. Where revisions to the main text are called for, the page and paragraph are set forth, followed by the appropriate revision. Added text is indicated with double-underlined text, and deleted text is shown in ~~strikeout~~.

## CHAPTER 3, PROJECT DESCRIPTION

The following text revision is made to page 3-1 of the Draft PEIR:

> The City of Fresno is located in Fresno County in the central San Joaquin Valley. The city is located approximately 200 miles north of Los Angeles, and 170 miles south of Sacramento. The city is located on the State Route (SR) 99 corridor. SR 99 is designated in Caltrans' Interregional Transportation Strategic Plan as a High Emphasis Focus Route. A High Emphasis Focus Route is a high-volume, primary artery in which lower-volume and facility-standard State highway routes connect for purposes of longer interregional trips and access to statewide gateways. Figure 3-1, Regional Location and Local Vicinity Map, shows the city of Fresno in its regional context and local vicinity. To the north of Fresno is Madera County, to the northeast and adjacent to Fresno, is the city of Clovis. Unincorporated land is located to the east, south, and west of Fresno.

The following text revision is made to Table 3-1 of the Draft PEIR:

- **Policy MT-4-g: Advocacy for Bike Accommodation.** Advocate for the accommodation of bike facilities in new or upgraded State Route interchanges and railroad construction projects, and construction of bicycle crossings of freeways and railroads.

  Caltrans has indicated that California's transportation system cannot meet the State's needs with just highways and supports guidelines meant to improve Caltrans' design of bicycle facilities. The guidelines were developed by the American Association of State Highway Transportation Officials and the National Association of City Transportation Officials. These guidelines promote a network of Class 1 bicycle facilities that connect major origins and destinations linked with a network of Class 2 facilities on all possible streets. A Class 1 bicycle facility is situated on a separate right-of-way or with some sort of physical barrier placed on the street between the bicycle and motor vehicle, while a Class 2 facility shares the travel way with motor vehicles separated by striping. These standards should be considered as transportation system developments so as not to preclude future design options.

The following text revision is made to section 3.2 on page 3-5 of the Draft PEIR:

The intent of the project is to update the text of the General Plan in order to reflect changes in applicable statutes and regulations related to Vehicle Miles Traveled (VMT), as well as updating the EIR to include a current baseline for the continued implementation of the General Plan, and reflect changes in City planning documents since adoption of the General Plan in 2014. The project also includes an update to the City's Greenhouse Gas Reduction Plan. In doing so, the City is converting the previously-certified MEIR to a PEIR with the goal of extending the life of the environmental document for the General Plan, pursuant to *State CEQA Guidelines* Section 15179 (Limitations on the Use of Master EIRs). The MEIR was certified by the City Council in 2014. This update is intended to streamline implementation of the General Plan's programs and policies by supporting them with updated environmental analysis, a current regulatory framework, and mitigation measures, pursuant to CEQA. The Planning Area, as described above in Section 3.1, has not been changed since the existing General Plan MEIR was certified, nor is the City proposing to change it for this General Plan EIR update. Additionally, the City is not proposing any land use changes for this General Plan EIR update. The specific text changes that are proposed are included below in Section 3.2.~~1.~~2.

The following text revision is made to section 3.2.1 on page 3-6 of the Draft PEIR:

The General Plan is a set of policies and programs that form a blueprint for the physical development of the city. The General Plan includes the elements listed below. As discussed above, the current General Plan will remain in-effect, aside from the proposed changes identified in Section 3.2.~~1.~~2, below. The General Plan identifies 2035 as the horizon year for which figures for growth in residential units, non-residential square footage, population, and jobs are estimated. After the 2035 horizon year, it is anticipated that the city will continue to develop. The city will continue to grow into the remaining portions of the SOI that were not developed during the horizon of the General Plan. As discussed below in Section 3.2.6, full buildout is anticipated to occur in approximately 2056.

The following text revision is made to section 3.2.1.1 on page 3-6 of the Draft PEIR:

- **Mobility and Transportation Element.** This element addresses the multi-modal transportation needs throughout the Planning Area including all users of streets and highways, transit, sidewalks and trails, and bicycle transportation modes. As a part of the PEIR update, and discussed below in Section 3.2.~~1.~~2, the project proposes changes to this element.

## SECTION 4.4, BIOLOGICAL RESOURCES

The following text revision is made to Mitigation Measure BIO-1.1 on page 4.4-26 of the Draft PEIR:

**Mitigation Measure BIO-1.1:** Construction of a proposed project shall avoid, where possible, vegetation communities that provide suitable habitat for a special-status species known to occur within the Planning Area. If construction within potentially suitable habitat must occur, the presence/absence of any special-status plant or wildlife species must be determined prior to construction, to determine if the habitat supports any special-status species. If a special-status species are determined to occupy any portion of a project site, avoidance and minimization

measures shall be incorporated into the construction phase of a project to avoid direct or incidental take of a listed species to the greatest extent feasible. Specific mitigation measures for direct or incidental impacts to special-status species shall be determined on a case-by-case basis through agency consultation during the review process for discretionary projects, and shall be consistent with survey protocols and mitigations measures recommended by the agency at the time of consultation.

The following text revision is made to Mitigation Measure BIO-1.2 on page 4.4-27 of the Draft PEIR:

**Mitigation Measure BIO-1.2:** Direct or incidental take of any state or federally listed species shall be avoided to the greatest extent feasible. If construction of a proposed project will result in the direct or incidental take of a listed species, consultation with the resources agencies and/or additional permitting may be required. Agency consultation through the CDFW 2081 and USFWS Section 7 or Section 10 permitting processes shall take place prior to any action that may result in the direct or incidental take of a listed species. Specific mitigation measures for direct or incidental impacts to a listed species shall~~will~~ be determined on a case-by-case basis through agency consultation. Specific mitigation measures for direct or incidental impacts to state or federally listed species shall be determined on a case-by-case basis through agency consultation during the review process for discretionary projects, and shall be consistent with survey protocols and mitigations measures recommended by the agency at the time of consultation.

The following text revision is made to Mitigation Measure BIO-1.3 on page 4.4-27 of the Draft PEIR:

**Mitigation Measure BIO-1.3:** Development within the Planning Area shall avoid, where possible, special-status natural communities and vegetation communities that provide suitable habitat for special-status species. If a proposed project will result in the loss of a special-status natural community or suitable habitat for special-status species, compensatory habitat-based mitigation is required under CEQA and CESA. Mitigation shall consist of preserving on-site habitat, restoring similar habitat or purchasing off-site credits from an approved mitigation bank. Compensatory mitigation shall be determined through consultation with the City and/or resource agencies. An appropriate mitigation strategy and ratio shall be agreed upon by the developer and lead agency to reduce project impacts to special-status natural communities to a less than significant level. Agreed-upon mitigation ratios shall depend on the quality of the habitat and presence/absence of a special-status species. Specific mitigation measures for direct or incidental impacts to special-status natural communities and vegetation communities shall be determined on a case-by-case basis through agency consultation during the review process for discretionary projects, and shall be consistent with survey protocols and mitigations measures recommended by the agency at the time of consultation~~The specific mitigation for project level impacts shall be determined on a case-by-case basis~~.

The following text revision is made to Mitigation Measure BIO-1.4 on page 4.4-27 of the Draft PEIR:

**Mitigation Measure BIO-1.4:** Proposed projects within the Planning Area should avoid, if possible, construction within the general nesting season of February through August for avian species protected under Fish and Game Code 3500 and the Migratory Bird Treaty Act (MBTA), if it is determined that suitable nesting habitat occurs on a project site. If construction cannot

avoid the nesting season, a pre-construction clearance survey shall be conducted by a qualified biologist to determine if any nesting birds or nesting activity is observed on or within 500-feet of a project site. If an active nest is observed during the survey, a biological monitor shall be on site to ensure that no proposed project activities would impact the active nest. A suitable buffer shall be established around the active nest until the nestlings have fledged and the nest is no longer active. Project activities may continue in the vicinity of the nest only at the discretion of the biological monitor. Prior to commencement of grading activities and issuance of any building permits, the Director of the City of Fresno Planning and Development Department, or designee, shall verify that all proposed project grading and construction plans include specific documentation regarding the requirements of the Migratory Bird Treaty Act (MBTA) and California Fish and Game Code Section 3503, that preconstruction surveys have been completed and the results reviewed by staff, and that the appropriate buffers (if needed) are noted on the plans and established in the field. Specific mitigation measures for direct or incidental impacts to avian species protected under Fish and Game Code 3500 and the Migratory Bird Treaty Act (MBTA) shall be determined on a case-by-case basis through agency consultation during the review process for discretionary projects, and shall be consistent with survey protocols and mitigations measures recommended by the agency at the time of consultation.

The following text revision is made to Mitigation Measure BIO-2.1 on page 4.4-29 of the Draft PEIR:

**Mitigation Measure BIO-2.1:** A pre-construction clearance survey, following current CDFW protocols, shall be conducted by a qualified biologist to determine if a proposed project will result in the removal or impact to any riparian habitat and/or a special-status natural community with potential to occur in the Planning Area, compensatory habitat-based mitigation shall be required to reduce project impacts. Compensatory mitigation shall~~must~~ involve the preservation or restoration or the purchase of off-site mitigation credits for impacts to riparian habitat and/or a special-status natural community. Mitigation shall~~must~~ be conducted in-kind or within an approved mitigation bank in the region. The specific mitigation ratio for habitat-based mitigation shall be determined through consultation with the appropriate agency (i.e., CDFW or USFWS) on a case-by-case basis. The project applicant/developer for a proposed project shall develop and implement appropriate mitigation regarding impacts on their respective jurisdictions.

The following text revision is made to Mitigation Measure BIO-2.2 on page 4.4-29 of the Draft PEIR:

**Mitigation Measure BIO-2.2:** A pre-construction clearance survey, following current CDFW protocols, shall be conducted by a qualified biologist to determine if a proposed project will result in significant impacts to streambeds or waterways protected under Section 1600 of Fish and Wildlife Code and Section 404 of the CWA. The project applicant/developer for a proposed project shall consult with partner agencies such as CDFW and/or USACE to develop and implement appropriate mitigation regarding impacts on their respective jurisdictions, determination of mitigation strategy, and regulatory permitting to reduce impacts, as required for projects that remove riparian habitat and/or alter a streambed or waterway. The project applicant/developer shall implement mitigation as directed by the agency with jurisdiction over the particular impact identified.

The following text revision is made to Mitigation Measure BIO-2.3 on page 4.4-29 of the Draft PEIR:

> **Mitigation Measure BIO-2.3:** Prior to project approval, a pre-construction clearance survey, following current CDFW protocols, shall be conducted by a qualified biologist to determine if a proposed project will result in project-related impacts to riparian habitat or a special-status natural community or if it may result in direct or incidental impacts to special-status species associated with riparian or wetland habitats. The project applicant/developer for a proposed project shall be obligated to address project-specific impacts to special-status species associated with riparian habitat through agency consultation, development of a mitigation strategy, and/or issuing incidental take permits for the specific special-status species, as determined by the CDFW and/or USFWS.

## SECTION 4.10, HYDROLOGY AND WATER QUALITY

The following text revision is made to page 4.10-2 of the Draft PEIR:

> Stormwater Drainage. Storm drainage facilities within the Fresno-Clovis Metropolitan area are planned, implemented, operated and maintained by the FMFCD. The storm drainage facilities are documented in the Storm Drainage and Flood Control Master Plan (SDFCMP), which is developed and updated by FMFCD. The master plan drainage system for the Planning Area consists of over 132~~158~~ individual drainage areas or urban watersheds. Drainage area boundaries are determined by geographic and topographic features and the economics of providing storm drainage service to the watershed. The storm drainage facilities within a drainage area consist of storm drain inlets, pipeline, retention basins, urban detention (water quality) basins, and stormwater pump stations. Surface grading improvements such as streets, curbs, gutters, and valley gutters are part of the City of Fresno infrastructure, but the general grading of these features is governed by the SDFCMP to provide a coherent implementation of drainage within the Planning Area.

The following text revision is made to page 4.10-3 of the Draft PEIR:

> The Fresno-Clovis Metropolitan area consists of drainage areas that are completed, e.g., all of the master planned facilities are constructed and functional; or in the process of being completed, e.g. portions of the retention basins, pipelines, and inlets are constructed and portions are not. For the drainage areas that are in the planning stage, e.g., the drainage area is planned and documented, the retention basin land may have been purchased, but no construction has occurred. Implementation of the SDFCMP occurs in response to development activity in newly developing areas and through Capital Improvement Project (CIP) planning in previously developed areas. Funding for storm drainage facilities occurs through the collection of drainage fees assessed on parcels as they develop, through grant funding from the State of California and the Federal Government, through low interest infrastructure improvement bonds, and in the past, through assessment districts. Drainage fees fund the majority of the construction of master plan facilities in newly developing areas. Grants, infrastructure loans, and assessment districts fund the majority of construction in previously developed drainage areas.

The following text revision is made to page 4.10-20 of the Draft PEIR:

The City of Fresno is a co-permittee with the FMFCD, the County of Fresno, the City of Clovis, and California State University Fresno in the Phase 1 NPDES Permit for Stormwater Discharges from Municipal Separate Storm Sewer Systems (MS4s). This Phase 1 MS4 Permit requires that the City and its co-permittees implement water quality and watershed protection measures for all development projects. In addition, the co-permittee agencies are also covered under NPDES Permit No. CAS0085324 (Storm Water Permit) effective May 17, 2018. The previous Storm Water Permit (adopted on May 31, 2013) required the adoption of Stormwater Quality Management Program (SWQMP) that describes the Storm Water Permit implementation actions and Co-Permittee responsibilities. That SWQMP was approved by the Central Valley Regional Water Quality Control Board on April 17, 2015 as is effective until adoption of a new SWQMP, which is anticipated within the next two years.

The Storm Water Permit includes water quality and watershed protection measures for all discharges to the storm drainage system, not only discharges from development projects. Development projects are subject to specific measures included in the Storm Water Permit and implemented as described in the SWQMP. The waste discharge requirements contained in the NPDES Permit have been designed to be consistent with the water quality standards and goals established in the Central Valley RWQCB's Basin Plan. The Phase 1 MS4 Permit prohibits discharges from violating applicable water quality standards or creating a nuisance or water quality impairment in receiving waters. Participation in the Phase 1 MS4 permit and implementation of the SDFCMP will reduce impacts to surface waters to acceptable levels and long-term project impacts to surface or groundwater quality will not exceed acceptable levels.

The following text revision is made to page 4.10-28 of the Draft PEIR:

FMFCD's Storm Drainage and Flood Control Master Plan divides the Planning Area into a number of drainage areas or urban watersheds. Each drainage area has its own Master Planned pipeline collection system and retention or urban detention basin. One hundred thirty two (132~~130~~) master planned drainage areas are completely or partially within the Planning Area. Three of the master planned drainage areas have collection systems, but do not have retention basins. The disposal of stormwater from these drainage areas occurs by pumping the stormwater directly into a nearby irrigation canal. Eight of the master planned drainage areas discharge to the San Joaquin River. One drainage area discharges directly to the river. Seven discharge to the river from urban detention (water quality) basins.

The following text revision is made to Mitigation Measure HYD-3.2 on page 4.10-30 of the Draft PEIR:

**Mitigation Measure HYD-3.2:** The City shall implement the following measures to reduce the impacts on the capacity of existing or planned SDFCMP retention basins:

Prior to approval of development projects, coordinate with FMFCD~~FCMFCD~~ to analyze the impacts to existing and planned retention basins to determine remedial measures required to reduce the impact on retention basin capacity to less than significant. Remedial measures would include:

1. Increase the size of the retention basin through the purchase of more land or deepening the basin or a combination for planned retention basins.

2. ~~Increase the size of the emergency relief pump capacity required to pump excess runoff volume out of the basin and into adjacent canal that convey the stormwater to a disposal facility for existing retention basins.~~

2~~3~~. Require developments that increase runoff volume to install, operate, and maintain, Low Impact Development (LID) measures to reduce runoff volume to the runoff volume that will not exceed the capacity of the existing retention basins.

The following text revision is made to Mitigation Measure HYD-3.3 on page 4.10-30 of the Draft PEIR:

**Mitigation Measure HYD-3.3:** The City shall implement the following measures to reduce the impacts on the capacity of existing or planned SDFCMP urban detention (stormwater quality) basins:

Prior to approval of development projects, coordinate with FMFCD~~FCMFCD~~ to determine the impacts to the urban detention basin weir overflow rates and determine remedial measures required to reduce the impact on the detention basin capacity to less than significant. Remedial measures would include:

1. Modify overflow weir to maintain the suspended solids removal rates adopted by the FMFCD Board of Directors.

2. Increase the size of the urban detention basin to increase residence time by purchasing more land. The existing detention basins are already at the adopted design depth.

3. Require developments that increase runoff volume to install, operate, and maintain, Low Impact Development (LID) measures to reduce peak runoff rates and runoff volume to the runoff rates and volumes that will not exceed the weir overflow rates of the existing urban detention basins.

The following text revision is made to Mitigation Measure HYD-3.4 on page 4.10-31 of the Draft PEIR:

**Mitigation Measure HYD-3.4:** The City shall implement the following measures to reduce the impacts on the capacity of existing or planned SDFCMP pump disposal systems:

1. Prior to approval of development projects, coordinate with FMFCD~~FCMFCD~~ to determine the extent and degree to which the capacity of the existing pump system will be exceeded.

2. Require new developments to install, operate, and maintain on-site detention facilities, consistent with FMFCD design standards, to reduce peak stormwater runoff rates to existing planned peak runoff rates.

3. Provide additional pump system capacity to maximum allowed by existing permitting to increase the capacity to match or exceed the peak runoff rates determined by the SDFCMP.

The following text revision is made to Mitigation Measure HYD-3.5 on page 4.10-31 of the Draft PEIR:

> **Mitigation Measure HYD-3.5:** The City shall coordinate with FMFCD~~FCMFCD~~ to develop and adopt a storm drainage update to the SDFCMP for the Southeast Development Area that is designed to collect, convey and dispose of runoff rates and volumes based on the planned land uses of the approved General Plan.

## SECTION 4.16, TRANSPORTATION

The following text revision is made to Policy MT-4-g included on page 4.16-26, and Policy MT-4-g is moved to page 4.16-34 of the Draft PEIR:

- **Policy MT-4-g: Advocacy for Bike Accommodation.** Advocate for the accommodation of bike facilities in new or upgraded State Route interchanges and railroad construction projects, and construction of bicycle crossings of freeways and railroads.

  Caltrans has indicated that California's transportation system cannot meet the State's needs with just highways and supports guidelines meant to improve Caltrans' design of bicycle facilities. The guidelines were developed by the American Association of State Highway Transportation Officials and the National Association of City Transportation Officials. These guidelines promote a network of Class 1 bicycle facilities that connect major origins and destinations linked with a network of Class 2 facilities on all possible streets. A Class 1 bicycle facility is situated on a separate right-of-way or with some sort of physical barrier placed on the street between the bicycle and motor vehicle, while a Class 2 facility shares the travel way with motor vehicles separated by striping. These standards should be considered as transportation system developments so as not to preclude future design options.

The following text revision is made to page 4.16-40 of the Draft PEIR:

> On December 28, 2018, the California Office of Administrative Law cleared the revised CEQA guidelines for use. Among the changes to the guidelines was removal of vehicle delay and LOS from consideration under CEQA. LOS is a qualitative measure that would assess the level of congestion and delay of a roadway segment. With the adopted guidelines, transportation impacts are to be evaluated based on a project's effect on VMT. VMT is calculated by multiplying the number of vehicle trips by the estimated number of miles driven per trip. Projects that create significant impacts under VMT would be required to mitigate their impacts through TDM measures such as car sharing, improved transit, and enhanced bicycle infrastructure. Lead agencies are allowed to opt in to the revised transportation guidelines, but the new guidelines must be used starting July 1, 2020.

In accordance with updated guidelines, the Mobility and Transportation Element of the approved General Plan began a departure from considering LOS as the only measure of a transportation system's effectiveness.

The City ~~has not yet established thresholds related to~~adopted VMT thresholds to be effective on July 1, 2020. With~~Once~~ adopted VMT thresholds for~~are established by~~ the City, ~~the~~ project impacts would be evaluated ~~against established thresholds~~ to determine the significance and identify mitigation measures, similar to LOS methodology. ~~Specific details about thresholds and methodologies for project impact evaluation and mitigations will be identified prior to July 1, 2020.~~

The State law provides guidance to evaluate the impacts related to vehicles miles traveled.

The following text revision is made to page 4.16-41 and 4.16-42 of the Draft PEIR:

Because the measures of VMT in per capita and per employee increase with the City's General Plan (2035) compared to existing (2019) conditions, it is determined that continued implementation of the approved General Plan may be considered to result in a significant impact related to State CEQA Guidelines Section 15064.3 subdivision (b), analyzing transportation impacts consistent with SB 743. As such, it is recommended that when the City plans to update its General Plan Mobility and Transportation Element, it should strive to lower the General Plan (2035) VMT per capita compared to existing conditions. This can be achieved through efficient planning of the General Plan Urban Form, Land Use, and Design Element, including promotion of transit-oriented development, infill development, and high density mixed-use development. In conjunction, implementation of the ATP, Complete Streets Policy, Transportation Demand Management strategies, and multi-modal transportation would also help in reducing the City's General Plan (2035) VMT.

In addition, the proposed project includes updates to the Mobility and Transportation Element of the approved General Plan, and the addition of the following policy:

> **Policy MT-2-m: Use VMT analysis for CEQA.** Use Vehicle Miles Traveled (VMT) as the criteria for evaluating transportation impacts under the California Environmental Quality Act (CEQA), pursuant to Senate Bill 743. Level of Service (LOS) may still be used for planning purposes and implementation of Capital Improvement Projects; however, VMT shall be used for determining mitigation under CEQA beginning in July of 2020.
>
> *Commentary: In 2013, the State of California passed Senate Bill 743, which eliminated automobile Level of Service (LOS) from transportation analysis under CEQA and replaced it with VMT. This shift from LOS to VMT is intended to better align with other statewide transportation goals, including reduction of GHG emissions, the creation of multimodal networks, and the promotion of integrated land uses.*

In June 2020~~Currently~~, the City ~~does not have~~ adopted thresholds for which to evaluate potential VMT impacts related to proposed projects or continued implementation of the

approved General Plan. Implementation of Policy MT-2-ml would allow the City to address potential VMT impacts for future projects as they are proposed. At the time this program EIR was prepared, consistent with CEQA Sections 15064.3(c) and 15007, no determination regarding VMT was made because the City did not have adopted thresholds and guidelines when the Draft PEIR was circulated for public comment~~has been made nor is one required~~. However, ~~after the City has adopted VMT thresholds, and~~ as future projects are proposed under the approved General Plan, VMT analyses consistent with CEQA Guidelines section 15064.3, subdivision (b) would be required to determine if the future project conflicts with the adopted thresholds.

**Applicable Laws, Regulations, Relevant Land Use Policies**

- Refer to the approved General Plan policies and objectives identified in Section 4.16.4.4, Local Regulatory Setting, above.

**Level of Significance Without Mitigation:** Less Than Significant Impact. VMT Thresholds were not adopted prior to publication of this Draft PEIR~~have not yet been adopted by the City, nor are they required to be adopted until July 1, 2020~~. With the adoption of Policy MT-2-m, the City will use VMT as the criteria for transportation impacts as the approved General Plan is continued to be implemented. Therefore, impacts related to VMT are considered LTS at this time.

The following text revision is made to page 4.16-43 of the Draft PEIR:

A discussion of VMT resulting from build out of the General Plan along with cumulative development is discussed above in TRA-2. Cumulative development is accounted for in the Fresno COG ABM, however, as discussed, the City ~~has not yet~~ established thresholds related to VMT in June 2020. Effective July 1, 2020,~~Once~~the City will have VMT thresholds~~ are established by the City~~, and future~~the~~ project impacts would be evaluated against established thresholds to determine the significance and identify mitigation measures, similar to LOS methodology. Because~~Specific details about~~ thresholds and methodologies for project impact evaluation were not established prior to distribution of this Draft PEIR~~and mitigations will be identified prior to July 1, 2020. Until these thresholds are adopted by the City~~, VMT is provided in this Draft PEIR for disclosure purposes only. However, within implementation of the City's VMT Guidelines, effective July 1, 2020, impacts related to VMT would be reduced through mitigation measures identified in the City's VMT Guidelines that include, but are not limited to, improving or increasing access to transit, implementing employer-based trip reduction programs, and increasing development density. With implementation of the City's VMT Guidelines and mitigation measures associated with VMT, the impacts related to VMT would be considered less than significant.

## SECTION 4.17, UTILITIES AND SERVICE SYSTEMS

The following text revision is made to page 4.17-6 of the Draft PEIR:

Stormwater collection and disposal, and flood control for the City of Fresno, City of Clovis, and the unincorporated areas within the City of Fresno's sphere of influence are provided by the Fresno Metropolitan Flood Control District (FMFCD). The FMFCD is a special district created by

the State of California Legislature and ratified by the voters of the district in 1956. FMFCD has 165~~more than 170~~ urban watersheds that collect stormwater runoff and dispose of the runoff in retention basins, local canals, or the San Joaquin River. Each urban watershed, called a drainage area by FMFCD, consists of a collection system and, in most cases, a retention basin to store and dispose of the runoff. Three drainage areas are pumped directly into a nearby canal, two drainage areas directly discharge to the San Joaquin River, and six drainage areas have collection systems that discharge to the San Joaquin River. Pipeline collection systems have diameters that range from 15 inches to 96~~108~~ inches. Retention basins range in size from 5 acres to 25 acres, with most being 8 to 10 acres in size. The flood control system consists of three dams and reservoirs, five detention basins, one diversion channel, and up to 175 miles of rural stream channels.

The following text revision is made to page 4.17-7 of the Draft PEIR:

**Stormwater Collection and Disposal.** FMFCD provides drainage service to the Fresno metropolitan area. In order to provide this service, the FMFCD has organized the metropolitan area into ~~165over 170~~ urban drainage areas or watersheds. Watersheds are delineated along topographic boundaries and are limited in size to between 200 acres to 600 acres. The area limitation reduces the size of the required collection facilities and disposal facilities. The service is provided through the combination of surface drainage improvements, chiefly curbs and gutters, that direct runoff to storm drainage inlets, which collect the runoff and convey the runoff to underground pipeline collection systems. The collection systems convey the stormwater to disposal facilities, which in the majority of cases are excavated, unlined basins. In three cases, the collection systems discharge to pump wet wells from which the stormwater is lifted into an adjacent canal, and in eight~~six~~ cases, the stormwater is discharged into the San Joaquin River. Two of these systems discharge directly to the San Joaquin River and six~~four~~ discharge to a water quality basin before discharge to the river occurs.

The following text revision is made to page 4.17-7 of the Draft PEIR:

FMFCD has utilized three means to implement drainage systems for the metropolitan area. One method has been to use ~~Community Block Grants and~~ low interest infrastructure loans from the State of California to construct drainage facilities in the older, previously developed areas of the City. A second method has been to form assessment districts under the provisions of the 1915 Bond Act. Assessment districts were formed based on drainage area boundaries, the parcels within the assessment districts were assessed a proportional share of the cost of the collection and disposal system, and the drainage system for the drainage area was constructed. The third and currently employed method is to collect drainage fees from parcels as they develop based on their prorated share of the cost of the drainage area collection and disposal systems. The implementing ordinance for the drainage fee structure is adopted by the City of Fresno, and the drainage fees are collected by the City when entitlements are granted or building permits are issued.

The following text revision is made to page 4.17-26 of the Draft PEIR:

Storm drainage facilities within the Planning Area as well as within Clovis are planned, implemented, operated, and maintained by the FMFCD. The existing and planned storm drainage facilities are documented in the Storm Drainage and Flood Control Master Plan (SDFCMP), which is developed and updated by FMFCD. The master plan drainage system for the Planning Area consists of approximately 132~~160~~ individual drainage areas or urban watersheds. The majority of the Planning Area is located within one of the individual drainage areas or urban watersheds.

# APPENDIX K

# PUBLIC COMMENT LETTERS ON THE DRAFT PEIR

**This page intentionally left blank**

Comment Letter A1

DocuSign Envelope ID: 9A992025-39E8-4048-99B0-A2B48DB85A1A

State of California – Natural Resources Agency
DEPARTMENT OF FISH AND WILDLIFE
Central Region
1234 East Shaw Avenue
Fresno, California 93710
(559) 243-4005
www.wildlife.ca.gov

*GAVIN NEWSOM, Governor*
*CHARLTON H. BONHAM, Director*

April 20, 2020

Sophia Pagoulatos
City of Fresno
2600 Fresno St, Room 3065
Fresno, California 93721

**Subject: City of Fresno General Plan (Project)**
**Program Environmental Impact Report (PEIR)**
**SCH#: 2019050005**

Dear Ms. Pagoulatos:

The California Department of Fish and Wildlife (CDFW) received a PEIR from the City of Fresno for the above-referenced Project pursuant to the California Environmental Quality Act (CEQA) and CEQA Guidelines.[1]

Thank you for the opportunity to provide comments and recommendations regarding those activities involved in the Project that may affect California fish and wildlife. Likewise, CDFW appreciates the opportunity to provide comments regarding those aspects of the Project that CDFW, by law, may be required to carry out or approve through the exercise of its own regulatory authority under Fish and Game Code.

**CDFW ROLE**

A1-1

CDFW is California's **Trustee Agency** for fish and wildlife resources and holds those resources in trust by statue for all the people of the State (Fish & G. Code, §§ 711.7, subd. (a) & 1802; Pub. Resources Code, § 21070; CEQA Guidelines § 15386, subd. (a)). CDFW, in its trustee capacity, has jurisdiction over the conservation, protection, and management of fish, wildlife, native plants, and habitat necessary for biologically sustainable populations of those species (*Id*., § 1802). Similarly, for purposes of CEQA, CDFW is charged by law to provide, as available, biological expertise during public agency environmental review efforts, focusing specifically on projects and related activities that have the potential to adversely affect fish and wildlife resources.

[1] CEQA is codified in the California Public Resources Code in section 21000 et seq. The "CEQA Guidelines" are found in Title 14 of the California Code of Regulations, commencing with section 15000.

DocuSign Envelope ID: 9A992025-39E8-4048-99B0-A2B48DB85A1A



CDFW is also submitting comments as a **Responsible Agency** under CEQA (Pub. Resources Code, § 21069; CEQA Guidelines, § 15381). CDFW expects that it may need to exercise regulatory authority as provided by the Fish and Game Code. As proposed, for example, the Project may be subject to CDFW's lake and streambed alteration regulatory authority (Fish & G. Code, § 1600 et seq.). Likewise, to the extent implementation of the Project as proposed may result in "take" as defined by State law of any species protected under the California Endangered Species Act (CESA) (Fish & G. Code, § 2050 et seq.), related authorization as provided by the Fish and Game Code may be required. **A1-1 cont.**

**PROJECT DESCRIPTION SUMMARY**

**Proponent:** City of Fresno

**Objective:** The City of Fresno is updating the existing General Plan Master EIR (MEIR) and converting it to a Program EIR (PEIR) to be in conformance with State law and consistent with recent legislative changes related to Vehicle Miles Traveled (VMT). The PEIR includes a current baseline for the continued implementation of the approved General Plan and reflects changes in City planning documents that have occurred since adoption of the approved General Plan in 2014. The City is not proposing any land use changes as a part of this project, but it does include an update to the City's Greenhouse Gas Reduction Plan. This update, consistent with Section 15168 of the CEQA Guidelines, is intended to streamline implementation of the General Plan's programs and projects by supporting them with updated environmental analysis, regulatory framework, and mitigation measures, pursuant to CEQA. **A1-2**

**Location:** The Project site is the entire city of Fresno and its sphere of influence.

**COMMENTS AND RECOMMENDATIONS**

CDFW offers the following comments and recommendations to assist the City of Fresno in adequately identifying and/or mitigating the Project's significant, or potentially significant, direct and indirect impacts on fish and wildlife (biological) resources. Editorial comments or other suggestions may also be included to improve the CEQA document prepared for this Project.

There are several special-status species that have been documented in the Project vicinity and may be present at individual Project sites in the Project area. These resources may need to be evaluated and addressed prior to any approvals that would allow ground-disturbing activities or land use changes. The PEIR indicates there are potentially significant impacts unless mitigation measures are taken but some measures are either non-specific and potentially difficult to enforce or missing for some species. **A1-3**

DocuSign Envelope ID: 9A992025-39E8-4048-99B0-A2B48DB85A1A



CDFW is concerned regarding potential impacts to special-status species including, but not limited to, the State and federally threatened California tiger salamander (*Ambystoma californiense*); the State threatened Swainson's hawk (*Buteo swainsoni*); the State threatened and federally endangered San Joaquin kit fox (*Vulpes macrotis mutica*); the State and federally endangered least Bell's vireo (*Vireo bellii pusillus*); the State threatened tricolored blackbird (*Agelauis tricolor*); the State candidate for listing as endangered Crotch bumble bee (*Bombus crotchii*); the State species of special concern burrowing owl (*Athene cunicularia*), western spadefoot (*Spea hammondii*), western pond turtle (*Emys* marmorata), American badger (*Taxidea taxus*), Chinook salmon (*Oncorhynchus tshawytscha*),pallid bat (*Antrozous pallidus), and* spotted bat (*Euderma maculatum*)*;* and the State rare California Satintail (*Imperata brevifolia*) and other special-status plants. In order to adequately assess any potential impact to biological resources, focused biological surveys should be conducted by a qualified wildlife biologist/botanist during the appropriate survey period(s) in order to determine whether any special-status species may be present within the Project area. Properly conducted biological surveys, and the information assembled from them, are essential to identify any mitigation, minimization, and avoidance measures and/or the need for additional or protocol-level surveys, especially in the areas not in irrigated agriculture, and to identify any Project-related impacts under CESA and other species of concern. **A1-3 cont.**

**I. Environmental Setting and Related Impact**

**Would the Project have a substantial adverse effect, either directly or through habitat modifications, on any species identified as a candidate, sensitive, or special-status species in local or regional plans, policies, or regulations, or by CDFW or the United States Fish and Wildlife Service (USFWS)?** **A1-4**

**COMMENT 1: California Tiger Salamander (CTS)**

**Issue:** CTS have the potential to occur in the Project area. Aerial imagery shows that the Project area includes potential upland habitat features (e.g., grasslands or ruderal fields with small mammal burrows) and may include or be adjacent to breeding habitat features (e.g., vernal pools, seasonal ponds, stock ponds, stormwater basins) for CTS that are dispersing from and into the area. The highest potential for these habitat features is in Northeast Fresno near or adjacent to the San Joaquin River and/or near Willow Avenue, but CTS have been documented in railroad right-of-ways, agriculture fields, and other marginal habitat when dispersing from burrows after winter rains begin. **A1-5**

**Specific Impacts:** The potential for ground- and vegetation-disturbing activities associated with the approval of the PEIR could result in: collapse of small mammal burrows, inadvertent entrapment, loss of upland refugia, water quality impacts to breeding sites, reduced reproductive success, reduction in health and vigor of eggs

DocuSign Envelope ID: 9A992025-39E8-4048-99B0-A2B48DB85A1A



and/or young, increased habitat fragmentation and edge effects, and direct mortality of individuals.

**Evidence impact would be significant:** Up to 75% of historic CTS habitat has been lost to urban and agricultural development (Searcy et al. 2013). Loss, degradation, and fragmentation of habitat are the primary threats to CTS in both the Central and San Joaquin valleys. Contaminants and vehicle strikes are also sources of mortality for the species (CDFW 2015, USFWS 2017a). The Project area is within the range of CTS and has suitable habitat (i.e., upland and riparian habitat). CTS have been determined to be physiologically capable of dispersing up to approximately 1.5 miles from seasonally flooded wetlands (Searcy and Shaffer 2011) and have been documented to occur near the Project area (CDFW 2020). Given the presence of suitable habitat within the Project area, potential ground-disturbing activities may significantly impact local populations of CTS.

**Recommended Potentially Feasible Mitigation Measure(s)**

Because suitable habitat for CTS is present within and adjacent to the Project site, CDFW recommends conducting the following evaluation of individual Project sites, incorporating the following mitigation measures into the program environmental impact report (PEIR) prepared for this Project, and that these measures be made conditions of approval for the Project. **A1-5 cont.**

**Recommended Mitigation Measure 1: Focused CTS Protocol-level Surveys**

CDFW recommends that a qualified biologist conduct protocol-level surveys in accordance with the USFWS "Interim Guidance on Site Assessment and Field Surveys for Determining Presence or a Negative Finding of the California Tiger Salamander" (USFWS 2003) at the appropriate time of year to determine the existence and extent of CTS breeding and refugia habitat. Please note that the recommended survey protocol starts with a site assessment to determine if suitable habitat occurs within a Project site. If suitable habitat exists, the protocol-level surveys for CTS require more than one survey season and are dependent upon sufficient rainfall to complete. As a result, consultation with CDFW and the USFWS is recommended well in advance of beginning the surveys and prior to any planned vegetation- or ground-disturbing activities. CDFW advises that the protocol-level survey include a 100-foot buffer around the Project area in all areas of wetland and upland habitat that could support CTS. Please be advised that protocol-level survey results are viable for two years after the results are reviewed by CDFW.

**Recommended Mitigation Measure 2: CTS Avoidance**

If suitable habitat features exist at an individual Project site and CTS protocol-level surveys as described in Mitigation Measure 1 are not conducted, CDFW advises that

DocuSign Envelope ID: 9A992025-39E8-4048-99B0-A2B48DB85A1A



a minimum 50-foot no-disturbance buffer be delineated around all small mammal burrows in suitable upland refugia habitat within and/or adjacent to an individual Project site. Further, CDFW recommends potential or known breeding habitat within and/or adjacent to the Project site be delineated with a minimum 250-foot no-disturbance buffer. Both upland burrow and wetland breeding no-disturbance buffers are intended to minimize impacts to CTS habitat and avoid take of individuals. Alternatively, the applicant can assume presence of CTS within the Project site and obtain from CDFW a State Incidental Take Permit (ITP) in accordance with Fish and Game Code section 2081(b).

**A1-5 cont.**

**Recommended Mitigation Measure 3: CTS Take Authorization**

If through surveys it is determined that CTS are occupying or have the potential to occupy an individual Project site, consultation with CDFW is warranted to determine if the Project can avoid take. If take cannot be avoided, take authorization would be warranted prior to initiating ground-disturbing activities to comply with CESA. Take authorization would occur through issuance of an ITP by CDFW, pursuant to Fish and Game Code section 2081(b). As stated above, in the absence of protocol surveys, the applicant can assume presence of CTS within the Project site and obtain an ITP from CDFW.

**COMMENT 2: Swainson's Hawk (SWHA)**

**Issue:** SWHA have been documented in the Project area (CNDDB 2020). SWHA have the potential to nest in areas with large, mature trees which are present at Woodward and Roeding parks as well as along the San Joaquin River. SWHA foraging habitat exists within the Project area along the southwestern and southeastern edges of Fresno in the form of agricultural land.

**Specific impacts:** Without appropriate avoidance and minimization measures for SWHA, potential significant impacts that may result from Project activities include: nest abandonment, loss of nest trees, loss of foraging habitat that would reduce nesting success (loss or reduced health or vigor of eggs or young), and direct mortality. Any take of SWHA without appropriate incidental take authorization would be a violation of Fish and Game Code.

**A1-6**

**Evidence impact is potentially significant:** SWHA exhibit high nest-site fidelity year after year and lack of suitable nesting habitat in the San Joaquin Valley limits their local distribution and abundance (CDFW 2016). Approval of the PEIR may lead to subsequent ground-disturbing activities that involve noise, groundwork, and movement of workers that could affect nests and has the potential to result in nest abandonment and loss of foraging habitat, significantly impacting local nesting SWHA.

DocuSign Envelope ID: 9A992025-39E8-4048-99B0-A2B48DB85A1A



**Recommended Potentially Feasible Mitigation Measure(s)**
Because suitable nesting and foraging habitat for SWHA is present in the Project area, CDFW recommends conducting the following evaluation of individual Project sites, incorporating the following mitigation measures into the PEIR prepared for this Project, and that these measures be made conditions of approval for the Project.

**Recommended Mitigation Measure 4: SWHA Surveys**

CDFW recommends that a qualified wildlife biologist determine if SWHA foraging habitat occurs on an individual Project site and/or if suitable nesting habitat is present within 0.5-mile of the site. If suitable SWHA nesting habitat is present within 0.5-mile of an individual Project-site, CDFW recommends consultation with CDFW to determine if SWHA nest surveys are warranted. Absent consultation, CDFW recommends that a qualified wildlife biologist conduct surveys for nesting SWHA following the survey methods developed by the Swainson's Hawk Technical Advisory Committee (SWHA TAC 2000) prior to future project implementation in relation to the PEIR. The SWHA TAC recommends a 0.5-mile survey distance from the limits of disturbance. The survey protocol includes early season surveys to assist the project proponent in implementing necessary avoidance and minimization measures, and in identifying active nest sites prior to initiating ground-disturbing activities. If suitable nesting habitat is within 0.5-mile of an individual Project site, SHWA nest surveys were warranted, and ground-disturbing activities will take place during the normal bird breeding season (March 1 through September 15), CDFW recommends that additional pre-activity surveys for active nests be conducted by a qualified biologist no more than 10 days prior to the start of Project implementation to ensure that SHWA have not begun nesting immediately before Project activities begin.

**A1-6 cont.**

**Recommended Mitigation Measure 5: No-disturbance Buffer**

Mitigation Measure BIO-1.4 of the PEIR states that a suitable buffer shall be established around all active nests. CDFW recommends a minimum no-disturbance buffer of 0.5-mile be delineated around active nests until the breeding season has ended or until a qualified biologist has determined that the birds have fledged and are no longer reliant upon the nest or parental care for survival. If a 0.5-mile no-disturbance buffer from an active nest is not feasible, consultation with CDFW is warranted to discuss how to implement the Project and avoid take.

**Recommended Mitigation Measure 6: SWHA Take Authorization**

If take cannot be avoided, take authorization through the issuance of an ITP, pursuant to Fish and Game Code section 2081(b) is necessary to comply with CESA.

DocuSign Envelope ID: 9A992025-39E8-4048-99B0-A2B48DB85A1A



**Recommended Mitigation Measure 7: Loss of SWHA Foraging Habitat**

If SWHA foraging habitat occurs on an individual Project site, CDFW recommends compensation for the loss of SWHA foraging habitat as described in CDFW's "Staff Report Regarding Mitigation for Impacts to Swainson's Hawks" (CDFG 1994) to reduce impacts to foraging habitat to less than significant. The Staff Report recommends that mitigation for habitat loss occur within a minimum distance of 10 miles from known nest sites. CDFW has the following recommendations based on the Staff Report:

- For projects within 1 mile of an active nest tree, a minimum of 1 acre of habitat management (HM) land for each acre of development is advised.
- For projects within 5 miles of an active nest but greater than 1 mile, a minimum of ¾ acre of HM land for each acre of development is advised.
- For projects within 10 miles of an active nest tree but greater than 5 miles from an active nest tree, a minimum of ½ acre of HM land for each acre of development is advised.

**Recommended Mitigation Measure 8: SWHA Nest Trees**

CDFW recommends that the removal of known raptor nest trees, even outside of the nesting season, be replaced with an appropriate native tree species planting at a ratio of 3:1 at or near the Project area or in another area that will be protected in perpetuity to reduce impacts resulting from the loss of nesting habitat.

**A1-6 cont.**

**COMMENT 3: Crotch Bumble Bee (CBB)**

**Issue:** On June 28, 2019, the Fish and Game Commission published findings of its decision to advance CBB to candidacy as endangered. Pursuant to Fish and Game Code section 2074.6, CDFW has initiated a status review report to inform the Commission's decision on whether listing of CBB, pursuant to CESA, is warranted. During the candidacy period, consistent with CEQA Guidelines section 15380, the status of the CBB as an endangered candidate species under CESA (Fish & G. Code, § 2050 et seq.) qualifies it as an endangered, rare, or threatened species under CEQA. It is unlawful to import into California, export out of California, or take, possess, purchase, or sell within California, CBB and any part or product thereof, or attempt any of those acts, except as authorized pursuant to CESA. Under Fish and Game Code section 86, take means to hunt, pursue, catch, capture, or kill, or to attempt to hunt pursue, catch, capture, or kill. Consequently, take of CBB during the status review period is prohibited unless authorization pursuant to CESA is obtained.

**A1-7**

DocuSign Envelope ID: 9A992025-39E8-4048-99B0-A2B48DB85A1A



CBB have been documented to occur within the vicinity of the Project area (CDFW 2020). Suitable CBB habitat includes areas of grasslands and upland scrub that contain requisite habitat elements, such as small mammal burrows. CBB primarily nest in late February through late October underground in abandoned small mammal burrows, but may also nest under perennial bunch grasses or thatched annual grasses, under brush piles, in old bird nests, and in dead trees or hollow logs (Williams et al. 2014; Hatfield et al. 2015). Overwintering sites utilized by CBB mated queens include soft, disturbed soil (Goulson 2010), or under leaf litter or other debris (Williams et al. 2014). Therefore, potential ground disturbance and vegetation removal associated with Project implementation may significantly impact local CBB populations.

**Specific impact:** The PEIR does not address CBB. Without appropriate avoidance and minimization measures for CBB, potentially significant impacts associated with ground- and vegetation-disturbing activities associated with implementation of the Project, and related future projects, could include loss of foraging plants, changes in foraging behavior, burrow collapse, nest abandonment, reduced nest success, reduced health and vigor of eggs, young and/or queens, in addition to direct mortality in violation of Fish and Game Code.

**Evidence impact is potentially significant:** CBB was once common throughout most of the central and southern California; however, it now appears to be absent from most of it, especially in the central portion of its historic range within California's Central Valley (Hatfield et al. 2014). Analyses by the Xerces Society et al. (2018) suggest there have been sharp declines in relative abundance by 98% and persistence by 80% over the last ten years.

**A1-7 cont.**

**Recommended Potentially Feasible Mitigation Measure(s)**

To evaluate potential impacts to CBB associated with the Project, CDFW recommends incorporating the following mitigation measures into the PEIR prepared for this Project and implementing the following mitigation measures as a condition of approval for the Project.

**Recommended Mitigation Measure 9: CBB Surveys**

CDFW recommends that a qualified biologist conduct focused surveys for CBB and their requisite habitat features prior to Project implementation to evaluate impacts resulting from potential ground- and vegetation-disturbing activities that may result from the approval of the PEIR.

DocuSign Envelope ID: 9A992025-39E8-4048-99B0-A2B48DB85A1A



**Recommended Mitigation Measure 10: CBB Take Avoidance**

If surveys cannot be completed, CDFW recommends that all small mammal burrows and thatched/bunch grasses be avoided by a minimum of 50 feet to avoid take and potentially significant impacts. If ground-disturbing activities will occur during the overwintering period (October through February), consultation with CDFW is warranted to discuss how to implement Project activities and avoid take. Any detection of CBB prior to or during Project implementation warrants consultation with CDFW to discuss how to avoid take.

**Recommended Mitigation Measure 11: CBB Take Authorization**

If CBB is identified during surveys, consultation with CDFW is warranted to determine if the Project can avoid take. If take cannot be avoided, take authorization prior to any ground-disturbing activities may be warranted. Take authorization would occur through issuance of an ITP by CDFW, pursuant to Fish and Game Code section 2081(b).

**A1-7 cont.**

**COMMENT 4: San Joaquin Kit Fox (SJKF)**

**Issue:** SJKF have been documented to occur within the vicinity of the Project area (CDFW 2020). Review of aerial imagery indicates that the Project area is bordered by and contains some patches of annual grassland. SJKF den in right-of-ways, vacant lots, etc., and populations can fluctuate over time. Presence/absence in any one year is not necessarily a reliable indicator of SJKF potential to occur on a site. SJKF may be attracted to project sites due to the type and level of ground-disturbing activities and the loose, friable soils resulting from intensive ground disturbance. As a result, there is potential for SJKF to colonize the Project sites or to occupy adjacent grassland.

**Specific impact:** Without appropriate avoidance and minimization measures for SJKF, potential significant impacts include den collapse, inadvertent entrapment, reduced reproductive success, reduction in health and vigor of young, and direct mortality of individuals.

**Evidence impact is potentially significant:** Habitat loss resulting from agricultural, urban, and industrial development is the primary threat to SJKF (Cypher et al. 2013). The Project area is adjacent to some of the only remaining undeveloped land in the vicinity, which is otherwise intensively managed for agriculture. Therefore, subsequent ground-disturbing activities have the potential to significantly impact local SJKF populations.

**A1-8**

DocuSign Envelope ID: 9A992025-39E8-4048-99B0-A2B48DB85A1A



**Recommended Potentially Feasible Mitigation Measure(s) (Regarding Environmental Setting and Related Impact Shortcoming)**

To evaluate potential impacts to SJKF associated with the Project, CDFW recommends conducting the following evaluation of the Project area, incorporating the following mitigation measures into the EIR prepared for this Project, and that these measures be made conditions of approval for the Project.

**Recommended Mitigation Measure 12: SJKF Habitat Assessment**

CDFW recommends that a qualified biologist conduct a habitat assessment in advance of Project implementation, to determine if an individual Project site or its immediate vicinity contains suitable habitat for SJKF.

**Recommended Mitigation Measure 13: SJKF Surveys** **A1-8 cont.**

If any suitable habitat features occur on or adjacent to an individual Project site, consultation with CDFW is recommended to determine if SJKF surveys are warranted. If SJKF surveys are warranted, CDFW recommends assessing presence/absence of SJKF by conducting surveys following the USFWS "Standardized recommendations for protection of the San Joaquin kit fox prior to or during ground disturbance" (2011). When surveys are warranted, CDFW advises conducting these surveys in all areas of potentially suitable habitat no less than 14 days and no more than 30 days prior to beginning of ground-disturbing activities.

**Recommended Mitigation Measure 14: SJKF Take Authorization**

SJKF detection warrants consultation with CDFW to discuss how to avoid take, or if avoidance is not feasible, to acquire an Incidental Take Permit (ITP) prior to ground-disturbing activities, pursuant to Fish and Game Code § 2081(b).

**COMMENT 5: Least Bell's Vireo (LBV)**

**Issue:** LBV is not specifically included in the PEIR and have been documented to occur within the Project area (CDFW 2020). Review of aerial imagery indicates the presence of riparian woodland vegetation, suitable to support LBV, within the Project area along the San Joaquin River and its vicinity. Therefore, the Project has the potential to impact LBV. **A1-9**

**Specific impact:** Without appropriate avoidance and minimization measures for LBV, potential significant impacts associated with Project development include nest abandonment, reduced reproductive success, and reduced health and vigor of eggs and/or young.

DocuSign Envelope ID: 9A992025-39E8-4048-99B0-A2B48DB85A1A



**Evidence impact is potentially significant:** LBV were abundant and widespread in the United States until the 1950s (Grinnell and Miller 1944). By the 1960s, they were considered scarce (Monson 1960), and by 1980, there were fewer than 50 pairs remaining (Edwards 1980), although this number had increased to 2,500 by 2004 (Kus and Whitfield 2005). The primary cause of decline for this species has been the loss and alteration of riparian woodland habitats (USFWS 2006). Fragmentation of their preferred habitat has also increased their exposure to brown-headed cowbird (Molothrus ater) parasitism (Kus 2002). Current threats to their preferred habitat include colonization by non-native plants and altered hydrology (diversion, channelization, etc.) (USFWS 2006).

**Recommended Potentially Feasible Mitigation Measure(s) (Regarding Environmental Setting and Related Impact)**

To evaluate potential impacts to LBV, CDFW recommends conducting the following evaluation of the Project site, incorporating the following mitigation measures into the PEIR prepared for this Project, and that these measures be made conditions of approval for the Project.

**Recommended Mitigation Measure 15: LBV Habitat Assessment**

**A1-9 cont.**

CDFW recommends that a qualified biologist conduct a habitat assessment in advance of Project implementation, to determine if an individual Project site or its immediate vicinity contains suitable habitat for LBV. Although LBV inhabit riparian woodlands, the species has also been found to benefit from non-riparian systems including brushy fields, second-growth forest or woodland, scrub oak, coastal chaparral, and mesquite brushlands (Kus and Miner 1989 in Poulin et al. 2011).

**Recommended Mitigation Measure 16: LBV Avoidance**

CDFW agrees with Mitigation Measure BIO-1.4 that nesting birds should be avoided if possible. LBV have the potential to occur outside the timeframe listed in Mitigation Measure BIO-1.4; thus, CDFW recommends that Project activities be timed to avoid the typical bird breeding season (February 1 through September 15).

**Recommended Mitigation Measure 17: LBV Surveys**

If Project activities must take place during the typical bird breeding season, and suitable LBV habitat is detected during habitat assessments at or adjacent to Project sites, CDFW recommends assessing presence/absence of LBV by conducting surveys following the USFWS' "Least Bell's Vireo Survey Guidelines" (2001) well in advance of the start of Project implementation to evaluate presence/absence of LBV nesting in proximity to Project activities, and to evaluate potential Project-related

DocuSign Envelope ID: 9A992025-39E8-4048-99B0-A2B48DB85A1A



impacts and permitting needs. Additionally, CDFW advises conducting focused pre-construction surveys for LBV in all areas of potentially suitable habitat within 10 days of Project implementation, when initiated during the bird breeding season to ensure LBV have not begun nesting activities between the completion of surveys and the start of Project activities.

**A1-9 cont.**

**Recommended Mitigation Measure 18: LBV Take Authorization**

LBV detection warrants consultation with CDFW to discuss how to avoid take, or if avoidance is not feasible, to acquire an ITP prior to ground-disturbing activities, pursuant to Fish and Game Code section 2081(b).

**COMMENT 6: Burrowing Owl (BUOW)**

**Issue:** BUOW are known to occur within the Project area. BUOW inhabit open grassland containing small mammal burrows, a requisite habitat feature used by BUOW for nesting and cover. Habitat both within and bordering the Project site, supports grassland habitat.

**Specific impact:** Potentially significant direct impacts associated with subsequent activities include burrow collapse, inadvertent entrapment, nest abandonment, reduced reproductive success, reduction in health and vigor of eggs and/or young, and direct mortality of individuals.

**Evidence impact is potentially significant:** BUOW rely on burrow habitat year-round for their survival and reproduction. Habitat loss and degradation are considered the greatest threats to BUOW in California's Central Valley (Gervais et al. 2008). The Project site is bordered by some of the only remaining undeveloped land in the vicinity, which is otherwise intensively managed for agriculture. Therefore, subsequent ground-disturbing activities associated with the Project have the potential to significantly impact local BUOW populations. In addition, and as described in CDFW's "Staff Report on Burrowing Owl Mitigation" (CDFG 2012), excluding and/or evicting BUOW from their burrows is considered a potentially significant impact under CEQA.

**A1-10**

**Recommended Potentially Feasible Mitigation Measure(s) (Regarding Environmental Setting and Related Impact)**

To evaluate potential impacts to BUOW, CDFW recommends conducting the following evaluation of the Project site, incorporating the following mitigation measures into the PEIR prepared for this Project, and that these measures be made conditions of approval for the Project.

DocuSign Envelope ID: 9A992025-39E8-4048-99B0-A2B48DB85A1A



**Recommended Mitigation Measure 19: BUOW Surveys**

CDFW recommends assessing presence/absence of BUOW by having a qualified biologist conduct surveys following the California Burrowing Owl Consortium's "Burrowing Owl Survey Protocol and Mitigation Guidelines" (CBOC 1993) and CDFW's "Staff Report on Burrowing Owl Mitigation" (CDFG 2012). Please note that these protocols start with a habitat evaluation to determine if suitable habitat is present. If suitable habitat is present, CBOC and CDFW's Staff Report suggest three or more surveillance surveys conducted during daylight with each visit occurring at least three weeks apart during the peak breeding season (April 15 to July 15), when BUOW are most detectable. These surveys are to determine if there are more BUOW in addition to the December 2017 observation surveyed for the Project.

**Recommended Mitigation Measure 20: BUOW Avoidance**

CDFW recommends no-disturbance buffers, as outlined in the "Staff Report on Burrowing Owl Mitigation" (CDFG 2012), be implemented prior to and during any ground-disturbing activities. Specifically, CDFW's Staff Report recommends that impacts to occupied burrows be avoided in accordance with the following table unless a qualified biologist approved by CDFW verifies through non-invasive methods that either: 1) the birds have not begun egg laying and incubation; or 2) that juveniles from the occupied burrows are foraging independently and are capable of independent survival. **A1-10 cont.**

| Location | Time of Year | Level of Disturbance | | |
|---|---|---|---|---|
| | | Low | Med | High |
| Nesting sites | April 1-Aug 15 | 200 m* | 500 m | 500 m |
| Nesting sites | Aug 16-Oct 15 | 200 m | 200 m | 500 m |
| Nesting sites | Oct 16-Mar 31 | 50 m | 100 m | 500 m |

* meters (m)

**Recommended Mitigation Measure 21: BUOW Passive Relocation and Mitigation**

If BUOW are found within these recommended buffers and avoidance is not possible, it is important to note that according to the Staff Report (CDFG 2012), exclusion is not a take avoidance, minimization, or mitigation method and is considered a potentially significant impact under CEQA. However, if necessary, CDFW recommends that burrow exclusion be conducted by qualified biologists and only during the non-breeding season, before breeding behavior is exhibited and after the burrow is confirmed empty through non-invasive methods, such as surveillance. CDFW recommends replacement of occupied burrows with artificial burrows at a

DocuSign Envelope ID: 9A992025-39E8-4048-99B0-A2B48DB85A1A



ratio of 1 burrow collapsed to 1 artificial burrow constructed (1:1) as mitigation for the potentially significant impact of evicting BUOW. BUOW may attempt to colonize or re-colonize an area that will be impacted; thus, CDFW recommends ongoing surveillance, at a rate that is sufficient to detect BUOW if they return. **A1-10 cont.**

**COMMENT 7: Tricolored Blackbird (TRBL)**

**Issue:** TRBL occur within or near the Project area (CDFW 2020). Review of aerial imagery indicates that the Project area has or is near to dense low vegetation fields that may serve as nest colony sites.

**Specific impact:** Without appropriate avoidance and minimization measures for TRBL, potential significant impacts include nest and/or colony abandonment, reduced reproductive success, and reduced health and vigor of eggs and/or young.

**Evidence impact would be significant**: As mentioned above, aerial imagery indicates that the Project site is near dense low vegetation fields that may serve as nest colony sites. TRBL aggregate and nest colonially, forming colonies of up to 100,000 nests (Meese et al. 2014). Approximately 86% of the global population is found in the San Joaquin Valley (Kelsey 2008, Weintraub et al. 2016). Increasingly, TRBL are forming larger colonies that contain progressively larger proportions of the species' total population (Kelsey 2008). In 2008, for example, 55% of the species' global population nested in only two colonies, which were located in silage fields (Kelsey 2008). In 2017, approximately 30,000 TRBL were distributed among only 16 colonies in Merced County (Meese 2017). Nesting can occur synchronously, with all eggs laid within one week (Orians 1961). For these reasons, depending on timing, disturbance to nesting colonies can cause abandonment, significantly impacting TRBL populations (Meese et al. 2014). **A1-11**

**Recommended Potentially Feasible Mitigation Measure(s)**

CDFW recommends conducting the following evaluation of the Project site, editing the PEIR to include the following measures specific to TRBL, and that these measures be made conditions of approval for the Project.

**Recommended Mitigation Measure 22: TRBL Habitat Assessment**

CDFW recommends that a qualified biologist conduct a habitat assessment of the Project site in advance of Project implementation, to determine if an individual Project site or its vicinity contains suitable habitat for TRBL.

DocuSign Envelope ID: 9A992025-39E8-4048-99B0-A2B48DB85A1A



**Recommended Mitigation Measure 23: TRBL Surveys**

If an individual Project site contains suitable habitat for TRBL, CDFW recommends that Project activities be timed to avoid the typical bird breeding season (February 1 through September 15). However, if Project activities must take place during that time, CDFW recommends that a qualified wildlife biologist conduct surveys for nesting TRBL no more than 10 days prior to the start of implementation to evaluate presence/absence of TRBL nesting colonies in proximity to Project activities and to evaluate potential Project-related impacts.

**Recommended Mitigation Measure 24: TRBL Avoidance**

If an active TRBL nesting colony is found during pre-activity surveys, CDFW recommends implementation of a minimum 300-foot no-disturbance buffer in accordance with CDFW's "Staff Guidance Regarding Avoidance of Impacts to Tricolored Blackbird Breeding Colonies on Agricultural Fields in 2015" (CDFW 2015b). CDFW advises that this buffer remain in place until the breeding season has ended or until a qualified biologist has determined that nesting has ceased, the birds have fledged, and are no longer reliant upon the colony or parental care for survival. It is important to note that TRBL colonies can expand over time and for this reason, the colony may need to be reassessed to determine the extent of the breeding colony within 10 days prior to Project initiation. **A1-11 cont.**

**Recommended Mitigation Measure 25: TRBL Take Authorization**

In the event that a TRBL nesting colony is detected during surveys, consultation with CDFW is warranted to discuss how to implement the Project and avoid take, or if avoidance is not feasible, to acquire an ITP, pursuant to Fish and Game Code Section 2081(b), prior to any ground-disturbing activities.

**COMMENT 8: Special-Status Bat Species**

**Issue:** Pallid bat, western mastiff bat, spotted bat, and hoary bat have been documented to occur in the vicinity of the Project area (CDFW 2020). In addition, habitat features that have the potential to support species is present within the Project area. However, the PEIR does not include specific measures to mitigate impacts to special-status bat species. **A1-12**

**Specific impact:** Without appropriate avoidance and minimization measures for special-status bat species, potential significant impacts resulting from ground- and vegetation-disturbing activities associated with Project construction include habitat loss, inadvertent entrapment, roost abandonment, reduced reproductive success, reduction in health and vigor of young, and direct mortality of individuals.

DocuSign Envelope ID: 9A992025-39E8-4048-99B0-A2B48DB85A1A



**Evidence impact is potentially significant:** Pallid bat and other bats are known to roost under bridges (Lewis 1994 and Gruver 2006). Project activities on or around bridges have the potential to affect habitat upon which special-status bat species depend on for successful breeding, and the potential to impact individuals and local populations.

**Recommended Potentially Feasible Mitigation Measure(s)**

CDFW recommends editing the PEIR to include the following measures and that these be made conditions of approval for the Project.

**Recommended Mitigation Measure 26: Habitat Assessment**

CDFW recommends that a qualified biologist conduct a habitat assessment well in advance of Project implementation to determine if an individual Project site or its immediate vicinity contains suitable habitat for special-status bat species.

**A1-12 cont.**

**Recommended Mitigation Measure 27: Focused Surveys**

If suitable habitat is present, CDFW recommends assessing presence/absence of special-status bats by conducting protocol-level surveys during the appropriate seasonal period of bat activity.

**Recommended Mitigation Measure 28: Consultation**

Detection of special-status bat species warrants consultation with CDFW prior to any activity that may disturb bats. CDFW recommends submitting a Bat Eviction Plan to CDFW for written approval prior to project implementation, and that the Eviction Plan include details for excluding bats from the roost site, and a monitoring plan to ensure that all bats have exited the roost prior to the start of activity and will be unable to re-enter the roost until activity is completed. CDFW also recommends that Project or bat eviction activities be timed to avoid lactation and young-rearing.

**COMMENT 9: Western spadefoot**

**Issue:** Western spadefoot inhabit grassland habitats, breed in seasonal wetlands, and seek refuge in upland habitat where they occupy burrows outside of the breeding season (Thomson et al. 2016). Review of aerial imagery indicates that the Project area contains these requisite habitat elements.

**A1-13**

**Specific impact:** Western Spadefoot are known to occur in the area (CDFW 2020). Without appropriate avoidance and minimization measures for western spadefoot, potentially significant impacts associated with ground disturbance include; collapse

DocuSign Envelope ID: 9A992025-39E8-4048-99B0-A2B48DB85A1A



of small mammal burrows, inadvertent entrapment, loss of upland refugia, water quality impacts to breeding sites, reduced reproductive success, reduction in health and vigor of eggs and/or young, and direct mortality of individuals.

**Evidence impact is potentially significant:** Habitat loss and fragmentation resulting from agricultural and urban development is the primary threat to western spadefoot (Thomson et al. 2016). The Project area is within the range of western spadefoot, contains suitable upland habitat (i.e., grasslands interspersed with burrows) and breeding habitat (i.e., vernal pools and swales). As a result, ground-disturbing activities associated with development of the Project site have the potential to significantly impact local populations of this species.

**Recommended Potentially Feasible Mitigation Measure(s)**
To evaluate potential impacts to western spadefoot associated with the Project, CDFW recommends conducting the following evaluation of the Project area, incorporating the following mitigation measures into the PEIR prepared for this Project, and that these measures be made conditions of approval for the Project. **A1-13 cont.**

**Recommended Mitigation Measure 29: Western Spadefoot Surveys**

CDFW recommends that a qualified biologist conduct focused surveys for western spadefoot and their requisite habitat features at individual Project sites to evaluate potential impacts resulting from ground- and vegetation-disturbance.

**Recommended Mitigation Measure 30: Western Spadefoot Avoidance**

If suitable habitat occurs at an individual Project site, avoidance of western spadefoot whenever possible is encouraged via delineation and observance of a 50-foot no-disturbance buffer around burrows.

**COMMENT 10: Western pond turtle (WPT)**

**Issue:** WPT are known to occur in the area of the Project site (CDFW 2020). WPT are known to nest in the spring or early summer within 100 meters of a water body, although nest sites as far away as 500 meter have also been reported (Thomson et al. 2016). **A1-14**

**Specific impact:** Without appropriate avoidance and minimization measures for WPT, potentially significant impacts associated with Project activities could include nest reduction, inadvertent entrapment, reduced reproductive success, reduction in health or vigor of eggs and/or young, and direct mortality.

DocuSign Envelope ID: 9A992025-39E8-4048-99B0-A2B48DB85A1A



**Evidence impact is potentially significant:** The Project site is in close proximity of known WPT habitat. Additionally, noise, vegetation removal, movement of workers, and ground disturbance as a result of Project activities have the potential to significantly impact WPT populations.

**Recommended Potentially Feasible Mitigation Measure(s)**

To evaluate potential impacts to WPT, CDFW recommends conducting the following evaluation of the Project site, editing the PEIR to include the following measures specific to WPT, and that these measures be made conditions of approval for the Project.

**Recommended Mitigation Measure 31: WPT Surveys**

A1-14 cont.

CDFW recommends a qualified biologist determine if suitable habitat for WPT occurs at an individual Project site. If suitable habitat is determined to occur on an individual Project site, CDFW recommends that a qualified biologist conduct focused surveys for WPT 10 days prior to Project implementation. In addition, CDFW recommends that focused surveys for nests occur during the egg-laying season (March through August) and that any nests discovered remain undisturbed until the eggs have hatched.

**Recommended Mitigation Measure 32: WPT Relocation**

CDFW recommends that if any WPT are discovered at the site immediately prior to or during Project activities, they be allowed to move out of the area on their own.

**COMMENT 11: American Badger**

**Issue:** American badger are known to occur on the Project site (CDFW 2020). Badgers occupy sparsely vegetated land cover with dry, friable soils to excavate dens, which they use for cover, and that support fossorial rodent prey populations (i.e., ground squirrels, pocket gophers, etc.) (Zeiner et. al 1990). The Project area supports these requisite habitat features. Therefore, the Project has the potential to impact American badger.

A1-15

**Specific impact:** Without appropriate avoidance and minimization measures for American badger, potentially significant impacts associated with ground disturbance include direct mortality or natal den abandonment, which may result in reduced health or vigor of young.

**Evidence impact is potentially significant:** Habitat loss is a primary threat to American badger (Gittleman et al. 2001). The Project has the expectation to promote

DocuSign Envelope ID: 9A992025-39E8-4048-99B0-A2B48DB85A1A



the growth of the City of Fresno, resulting in a high degree of land conversion and potential habitat fragmentation. As a result, ground-disturbing activities have the potential to significantly impact local populations of American badger.

**Recommended Potentially Feasible Mitigation Measure(s)**

To evaluate potential impacts to American badger associated with the Project, CDFW recommends conducting the following evaluation of tProject sites, incorporating the following mitigation measures into the PEIR prepared for this Project, and that these measures be made conditions of approval for the Project.

**Recommended Mitigation Measure 33: American Badger Surveys**

If suitable habitat is present, CDFW recommends that a qualified biologist conduct focused surveys for American badger and their requisite habitat features (dens) to evaluate potential impacts resulting from ground- and vegetation-disturbance.

**Recommended Mitigation Measure 34: American Badger Avoidance**

If suitable habitat is present, avoidance whenever possible is encouraged via delineation and observation of a 50-foot no-disturbance buffer around dens until it is determined through non-invasive means that individuals occupying the den have dispersed.

**A1-15 cont.**

**COMMENT 12: Spring-Run Chinook Salmon**

**Issue:** The City of Fresno's sphere of influence's northern border encompasses a section of the San Joaquin River, which is known to support Chinook Salmon (*Oncorhynchus tshawytscha*), including the species of special concern fall-/late fall-run, and the nonessential experimental population of Central Valley spring-run.

**Specific impact:** Without appropriate avoidance and minimization measures potential impacts to chinook salmon include, disrupted spawning behavior, reduced reproductive success, and inability to reproduce.

**Evidence impact would be significant:** The Project area contains a part of the San Joaquin River; ground-disturbing activities or in-water work have the potential to impact salmon. Spring-run Chinook salmon are believed to have been the more abundant run and once spawned as high in the watershed as Mammoth Pool, the San Joaquin River represents the southernmost extent of the spring-run Chinook salmon geographic range and was once the largest such population in California (SJRRP 2018).

**A1-16**

DocuSign Envelope ID: 9A992025-39E8-4048-99B0-A2B48DB85A1A



**Recommended Potentially Feasible Mitigation Measure(s)**

To evaluate potential impacts to chinook salmon associated with the Project, CDFW recommends conducting the following evaluation of Project sites, incorporating the following mitigation measures into the PEIR prepared for this Project, and that these measures be made conditions of approval for the Project.

**Recommended Mitigation Measure 35: Chinook Salmon Avoidance**

CDFW recommends Project activities avoid work in water and floodplains whenever possible, conduct Project activities during less critical times of the year (late June through August), and avoid spawning riffles or holding pools.

**A1-16 cont.**

**Recommended Mitigation Measure 36: Tree Removal Avoidance**

If Project activities will occur in the riparian environment, CDFW recommend avoidance of tree removal whenever possible. If trees removal is not feasible, CDFW recommends preparation of a revegetation plan that incorporates native tree plantings within the San Joaquin River Restoration Area to replace removed trees.

**Recommended Mitigation Measure 37: Habitat Mitigation**

If Project activities will occur in the Floodplain, CDFW advises consultation with us to determine how to minimize and mitigate impacts to juvenile salmon utilization.

**COMMENT 13: Special Status Plant species**

**Issue:** Plants listed pursuant to federal Endangered Species Act, CESA, and the Native Plant Protection Act, as well as other special-status plants such California Rare Plant Rank (CRPR) plant species have been documented in and around the Project area (CDFW 2020).

**Specific impact:** Without appropriate avoidance and minimization measures potential impacts to special-status plant species include inability to reproduce and direct mortality. Unauthorized take of species listed as threatened, endangered, or rare pursuant to CESA or the Native Plant Protection Act is a violation of Fish and Game Code.

**A1-17**

**Evidence impact would be significant:** Special-status plant species plant species above are threatened with habitat loss and habitat fragmentation resulting from development, vehicle and foot traffic, and introduction of non-native plant species (CNPS 2020), all of which may be unintended impacts of the Project. Therefore,

DocuSign Envelope ID: 9A992025-39E8-4048-99B0-A2B48DB85A1A



impacts of the Project have the potential to significantly impact populations of the species mentioned above.

**Recommended Potentially Feasible Mitigation Measure(s)**
To evaluate potential impacts to special-status plants associated with the Project, CDFW recommends conducting the following evaluation of the Project area and including the following mitigation measures as conditions of Project approval in the Project's CEQA document.

**Recommended Mitigation Measure 38: Special-Status Plant Habitat Assessment**

CDFW recommends that a qualified botanist conduct a habitat assessment of individual Project sites well in advance of Project implementation, to determine if the Project area or its vicinity contains suitable habitat for special-status plant species.

**Recommended Mitigation Measure 39: Focused Surveys**

If suitable habitat is present, CDFW recommends that individual Project sites be surveyed for special-status plants by a qualified botanist following the "Protocols for Surveying and Evaluating Impacts to Special Status Native Plant Populations and Sensitive Natural Communities" (CDFW 2018). This protocol, which is intended to maximize detectability, includes identification of reference populations to facilitate the likelihood of field investigations occurring during the appropriate floristic period. In the absence of protocol-level surveys being performed, additional surveys may be necessary. **A1-17 cont.**

**Recommended Mitigation Measure 40: Special-Status Plant Avoidance**

CDFW recommends special-status plant species be avoided whenever possible by delineation and observing a no-disturbance buffer of at least 50 feet from the outer edge of the plant population(s) or specific habitat type(s) required by special-status plant species. If buffers cannot be maintained, then consultation with CDFW is warranted to determine appropriate minimization and mitigation measures for impacts to special-status plant species.

**Recommended Mitigation Measure 41: Special-Status Plant Take Authorization**

If a State-listed plant species is identified during botanical surveys, consultation with CDFW is warranted to determine if the Project can avoid take. However, if take cannot be avoided, take authorization would need to occur through issuance of an ITP by CDFW to comply with CESA and/or Fish and Game Code section 1900 and California Code of Regulations, title 14, section 786.9, subdivision (b).

DocuSign Envelope ID: 9A992025-39E8-4048-99B0-A2B48DB85A1A



**II. Editorial Comments and/or Suggestions**

**Lake and Streambed Alteration:** The Project contains features that may result in Project activities at individual Project sites being subject to CDFW's regulatory authority pursuant Fish and Game Code section 1600 et seq. Fish and Game Code section 1602 requires an entity to notify CDFW prior to commencing any activity that may (a) substantially divert or obstruct the natural flow of any river, stream, or lake; (b) substantially change or use any material from the bed, bank, or channel of any river, stream, or lake; or (c) deposit debris, waste or other materials that could pass into any river, stream, or lake. "Any river, stream, or lake" includes those that are ephemeral or intermittent, such as the unnamed stream within the Project site, as well as those that are perennial in nature. **A1-18**

For additional information on notification requirements, please contact our staff in the Lake and Streambed Alteration Program at (559) 243-4593. It is important to note, CDFW is required to comply with CEQA, as a Responsible Agency, when issuing a Lake or Streambed Alteration Agreement (LSAA). If inadequate, or no environmental review, has occurred, for the Project activities that are subject to notification under Fish and Game Code section 1602, CDFW will not be able to issue the Final LSAA until CEQA analysis for the project is complete. This may lead to considerable Project delays.

**Federally Listed Species:** CDFW recommends consulting with the USFWS on potential impacts to federally listed species including, but not limited to, CTS and SJKF. Take under FESA is more broadly defined than CESA; take under FESA also includes significant habitat modification or degradation that could result in death or injury to a listed species by interfering with essential behavioral patterns such as breeding, foraging, or nesting. Consultation with the USFWS in order to comply with FESA is advised well in advance of any ground-disturbing activities. **A1-19**

**ENVIRONMENTAL DATA**

CEQA requires that information developed in environmental impact reports and negative declarations be incorporated into a database which may be used to make subsequent or supplemental environmental determinations (Pub. Resources Code, § 21003, subd. (e)). Accordingly, please report any special-status species and natural communities detected during Project surveys to the California Natural Diversity Database (CNDDB). The CNDDB field survey form can be found at the following link: https://www.wildlife.ca.gov/Data/CNDDB/Submitting-Data. The completed form can be mailed electronically to CNDDB at the following email address: CNDDB@wildlife.ca.gov. The types of information reported to CNDDB can be found at the following link: https://www.wildlife.ca.gov/Data/CNDDB/Plants-and-Animals. **A1-20**

DocuSign Envelope ID: 9A992025-39E8-4048-99B0-A2B48DB85A1A



**FILING FEES**

If it is determined that the Project has the potential to impact biological resources, an assessment of filing fees will be necessary. Fees are payable upon filing of the Notice of Determination by the Lead Agency and serve to help defray the cost of environmental review by CDFW. Payment of the fee is required in order for the underlying project approval to be operative, vested, and final (Cal. Code Regs, tit. 14, § 753.5; Fish & G. Code, § 711.4; Pub. Resources Code, § 21089).

CDFW appreciates the opportunity to comment on the Project to assist the City of Fresno in identifying and mitigating the Project's impacts on biological resources.

More information on survey and monitoring protocols for sensitive species can be found at CDFW's website (https://www.wildlife.ca.gov/Conservation/Survey-Protocols). If you have any questions, please contact Jaime Marquez, Environmental Scientist, at the address provided on this letterhead, by telephone at (559) 243-4014, extension 291, or by electronic mail at Jaime.Marquez@wildlife.ca.gov.

**A1-21**

Sincerely,

DocuSigned by:
FA83F09FE08945A...

Julie A. Vance
Regional Manager

ec: Patricia Cole
United States Fish and Wildlife Service
Patricia.Cole@fws.gov

DocuSign Envelope ID: 9A992025-39E8-4048-99B0-A2B48DB85A1A



**Literature Cited**

California Burrowing Owl Consortium. 1993. Burrowing owl survey protocol and mitigation guidelines. April 1993.

California Department of Fish and Game (CDFG). 1994. Staff Report Regarding Mitigation for Impacts to Swainson's Hawks (*Buteo Swainsoni*) in the Central Valley of California. California Department of Fish and Game.

CDFG. 2012. Staff Report on Burrowing Owl Mitigation. California Department of Fish and Game.

California Department of Fish and Wildlife (CDFW). 2015. California Tiger Salamander Technical Review – Habitat, Impacts and Conservation. California Department of Fish and Wildlife, October 2015.

CDFW. 2016. Five Year Status Review for Swainson's Hawk (*Buteo swainsoni*). California Department of Fish and Wildlife. April 11, 2016.

CDFW, 2018. Protocols for Surveying and Evaluating Impacts to Special Status Native Plant Populations and Sensitive Natural Communities. California Department of Fish and Wildlife. March 20, 2018.

CDFW. 2020. Biogeographic Information and Observation System (BIOS). https://www.wildlife.ca.gov/Data/BIOS. Accessed April 1, 2020.

California Native Plant Society, Rare Plant Program. 2020. Inventory of Rare and Endangered Plants of California (online edition, v8-03 0.39). Website http://www.rareplants.cnps.org. Accessed 08 April 2020.

Cypher, B. L., S. E. Phillips, P. A. Kelly, 2013. Quantity and distribution of suitable habitat for endangered San Joaquin kit foxes: conservation implications. Canid Biology and Conservation 16(7): 25–31.

Edwards, C. L. 1980. A report on the distribution, population trends and habitat trends and habitat requirements of the Bell's vireo on the Lower Colorado River. Yuma District Office of the Bureau of Land Management, Arizona Fish and Game Department, Yuma, AZ, USA.

Gervais, J.A., D.D. Rosenberg, and L.A. Comrack. Burrowing Owl (*Athene cunicularia*) *in* Shuford, W.D. and T. Gardali, editors. 2008. California Bird Species of Special Concern: A ranked assessment of species, subspecies, and distinct populations of birds of immediate conservation concern in California. Studies of Western

DocuSign Envelope ID: 9A992025-39E8-4048-99B0-A2B48DB85A1A



Birds 1. Western Field Ornithologists, Camarillo, California, and California Department of Fish and Game, Sacramento, California, USA.

Gittleman, J. L., S. M. Funk, D. MacDonald, and R. K. Wayne, 2001. Carnivore conservation. Cambridge University Press, Cambridge, United Kingdom.

Grinnell, J., and A. H. Miller. 1944. The Distribution of Birds of California. Pacific Coast Avifauna 27. Cooper Ornithological Club, Berkeley, CA, USA.

Gruver, J.C. and D.A. Keinath, 2006. Townsend's Big-eared Bat (Corynorhinus townsendii): A Technical Conservation Assessment. [Online]. USDA Forest Service, Rocky Mountain Region. Available: http://www.fs.fed.us/r2/projects/scp/assessments/townsendsbigearedbat.pdf

Goulson, D. 2010. Bumblebees: behaviour, ecology, and conservation. Oxford University Press, New York. 317pp.

Hatfield, R, S. Colla, S. Jepsen, L. Richardson, R. Thorp, and S. Foltz Jordan. 2014. Draft IUCN Assessments for North American *Bombus* spp. for the North American IUCN Bumble Bee Specialist Group. The Xerces Society for Invertebrate Conservation, www.xerces.org, Portland, OR.

Hatfield, R., Jepsen, S., Thorp, R., Richardson, L. & Colla, S. 2015. Bombus crotchii. The IUCN Red List of Threatened Species. http://dx.doi.org/10.2305/IUCN.UK.2015--2.RLTS.T44937582A46440211.en. Accessed January 17, 2020.

Kelsey, R. 2008. Results of the tricolored blackbird 2008 census. Report submitted to U.S. Fish and Wildlife Service, Portland, OR, USA.

Kus, B. E. 2002. Fitness consequences of nest desertion in an endangered host, the least Bell's vireo. Condor 104: 795-802.

Kus, B. E. and K. L. Miner. 1989. Use of non-riparian habitats by least Bell's vireos (*Vireo bellii pusillus*). *In* Proceedings of the California riparian systems conference: Protection, management, and restoration for the 1990's, edited by D. L. Abell, 299-303. Berkeley, CA: U.S. Forest Service General Technical Report PSW-110.

Kus, B. E., and M. J. Whitfield. 2005. Parasitism, productivity, and population growth: Response of least Bell's vireos (*Vireo bellii extimus*) and Southwestern Willow Flycatchers (*Empidonax traillii extimus*) to cowbird (*Molothrus* spp.) control. Ornithological Monographs 57:16–27.

DocuSign Envelope ID: 9A992025-39E8-4048-99B0-A2B48DB85A1A



Lewis, S. E., 1994. Night roosting ecology of pallid bats (Antrozous pallidus) in Oregon. The American Midland Naturalist, Vol. 132, pp. 219-226.

Meese, R. J., E.C. Beedy, and W.J. Hamilton, III. 2014. Tricolored blackbird (Agelaius tricolor), The Birds of North America (P. G. Rodewald, Ed.). Ithaca: Cornell Lab of Ornithology; Retrieved from the Birds of North America: https://birdsna-org.bnaproxy.birds.cornell.edu/Species-Account/bna/species/tribla. Accessed December 15, 2017.

Monson, G. 1960. The nesting season. Southwest Regional Report, Audubon Field Notes 14:469.

Orians, G.H. 1961. The ecology of blackbird (Agelaius) social systems. Ecol. Monogr. 31:285-312.

SJRRP. 2018. Fisheries framework: spring-run and fall-run Chinook salmon. San Joaquin River Restoration Program. June 2018. 29 pp.

Searcy, C.A. and H.B. Shaffer. 2011. Determining the migration distance of a vagile vernal pool specialist: How much land is required for conservation of California tiger salamanders? *In* Research and Recovery in Vernal Pool Landscapes, D. G. Alexander and R. A. Schlising, Eds. California State University, Chico, California.

Searcy, C.A., E. Gabbai-Saldate, and H.B. Shaffer. 2013. Microhabitat use and migration distance of an endangered grassland amphibian. Biological Conservation 158: 80-87.

Swainson's Hawk Technical Advisory Committee (SWHA TAC). 2000. Recommended Timing and Methodology for Swainson's Hawk Nesting Surveys in California's Central Valley. Swainson's Hawk Technical Advisory Committee, May 31, 2000.

Thomson, R. C., A. N. Wright, and H. Bradley Shaffer, 2016. California Amphibian and Reptile Species of Special Concern. California Department of Fish and Wildlife and University of California Press.

United States Fish and Wildlife Service (USFWS). 2001. Least Bell's Vireo Survey Guidelines. January 2001. 3 pp.

USFWS. 2003. Interim Guidance on Site Assessment and Field Surveys for Determining Presence or a Negative Finding of the California Tiger Salamander, October 2003.

USFWS, 2006. Least Bell's Vireo 5-Year Review Summary and Evaluation. September 2006. 10 pp.

Comment Letter A1 *cont.*

DocuSign Envelope ID: 9A992025-39E8-4048-99B0-A2B48DB85A1A



USFWS. 2017a. Recovery Plan for the Central California Distinct Population Segment of the California Tiger Salamander (*Ambystoma californiense*). U. S. Fish and Wildlife Service, Region 8, Sacramento, California. June 2017.

Weintraub, K., T.L. George, and S.J. Dinsmore. 2016. Nest survival of tricolored blackbirds in California's Central Valley. The Condor 118(4): 850–861.

Williams, P. H., R. W. Thorp, L. L. Richardson, and S .R. Colla. 2014. Bumble bees of North America: An Identification guide. Princeton University Press, Princeton, New Jersey. 208pp.

Xerces Society for Invertebrate Conservation, Defenders of Wildlife, and Center for Food Safety. 2018. A petition to the state of california fish and game commission to list the Crotch bumble bee (*Bombus crotchii*), Franklin's bumble bee (*Bombus franklini*), Suckley cuckoo bumble bee (*Bombus suckleyi*), and western bumble bee (*Bombus occidentalis occidentalis*) as Endangered under the California Endangered Species Act. October 2018.

Zeiner, D. C., W. F. Laudenslayer, Jr, K. E. Mayer, and M. White. 1990. California's Wildlife Volume I-III. California Department of Fish and Game, editor. Sacramento, CA, USA.

Comment Letter A1 *cont.*

DocuSign Envelope ID: 9A992025-39E8-4048-99B0-A2B48DB85A1A

**Attachment 1**

**CALIFORNIA DEPARTMENT OF FISH AND WILDLIFE**
**RECOMMENDED MITIGATION MONITORING AND REPORTING PROGRAM (MMRP)**

**PROJECT: Fresno General Plan**

**SCH No.: 2019050005**

| **RECOMMENDED MITIGATION MEASURE** | **STATUS/DATE/INITIALS** |
|---|---|
| *Before Disturbing Soil or Vegetation* | |
| Mitigation Measure 1: Focused CTS Protocol-level Surveys | |
| Mitigation Measure 3: CTS Take Authorization | |
| Mitigation Measure 4: SWHA Surveys | |
| Mitigation Measure 6: SWHA Take Authorization | |
| Mitigation Measure 7: Loss of SWHA Foraging Habitat | |
| Mitigation Measure 8: SWHA Nest Trees | |
| Mitigation Measure 9: CBB Surveys | |
| Mitigation Measure 11: CBB Take Authorization | |
| Mitigation Measure 12: SJKF Habitat Assessment | |
| Mitigation Measure 13: SJKF Surveys | |
| Mitigation Measure 14: SJKF Take Authorization | |
| Mitigation Measure 15: LBV Habitat Assessment | |
| Mitigation Measure 17: LBV Surveys | |
| Mitigation Measure 18: LBV Take Authorization | |
| Mitigation Measure 19: BUOW Surveys | |
| Mitigation Measure 21: BUOW passive Relocation and Mitigation | |
| Mitigation Measure 22: TRBL Habitat Assessment | |
| Mitigation Measure 23: TRBL Surveys | |
| Mitigation Measure 25: TRBL Take Authorization | |
| Mitigation Measure 26: Habitat Assessment | |
| Mitigation Measure 27: Focused Surveys | |
| Mitigation Measure 28: Consultation | |
| Mitigation Measure 29: Western Spadefoot Surveys | |
| Mitigation Measure 31: WPT Surveys | |
| Mitigation Measure 32: WPT Relocation | |
| Mitigation Measure 33: American Badger Surveys | |

DocuSign Envelope ID: 9A992025-39E8-4048-99B0-A2B48DB85A1A

| **RECOMMENDED MITIGATION MEASURE** | **STATUS/DATE/INITIALS** |
|---|---|
| Mitigation Measure 37: Habitat Mitigation | |
| Mitigation Measure 38: Special Status Plant Habitat Assessment | |
| Mitigation Measure 39: Focused Surveys | |
| Mitigation Measure 41: Special-status Plant take Avoidance | |
| *During Construction* | |
| Mitigation Measure 2: CTS Avoidance | |
| Mitigation Measure 5: No-disturbance Buffer | |
| Mitigation Measure 10: CBB Take Avoidance | |
| Mitigation Measure 16: LBV Avoidance | |
| Mitigation Measure 20: BUOW Avoidance | |
| Mitigation Measure 24: TRBL Avoidance | |
| Mitigation Measure 30: Western Spadefoot Avoidance | |
| Mitigation Measure 32: WPT Relocation | |
| Mitigation Measure 34: American Badger Avoidance | |
| Mitigation Measure 35: Chinook Salmon Avoidance | |
| Mitigation Measure 36: Tree Removal Avoidance | |
| Mitigation Measure 40: Special-Status Plant Avoidance | |

**This page intentionally left blank**

Comment Letter

A2



**DEPARTMENT OF TRANSPORTATION**
**DISTRICT 6**
1352 WEST OLIVE AVENUE
P.O. BOX 12616
FRESNO, CA 93778-2616
PHONE (559) 444-2493
FAX (559) 445-5875
TTY 711
www.dot.ca.gov

*Making Conservation a California Way of Life.*

May 5, 2020

06-FRE-GEN-GEN
Program Environmental Impact Report
City of Fresno General Plan Update
State Clearinghouse Number: 2019050005

Ms. Sophia Pagoulatos
Planning Manager
City of Fresno, DARM Department
2600 Fresno Street, Room 3076
Fresno, California 93721

Dear Ms. Pagoulatos:

Caltrans has completed its review of the Fresno General Plan Public Review Draft Program Environmental Impact Report PEIR dated March 2020 and prepared by LSA for the City of Fresno (City). In 2014, Caltrans provided comments to the now adopted City's General Plan and the accompanied Master Environmental Impact report (MEIR). In order to be in conformance with State law and consistent with recent legislative changes, the City is updating the MEIR and converting it to a Program EIR (PEIR).

The City's General Plan proposes a balanced transportation system that serves transit, bikes and pedestrians as well as automobiles. This multi-modal system should support a more compact development pattern, which in turn will support other goals, including preserving farmland and making neighborhoods more walkable. Caltrans applauds the City in their efforts to reduce the reliance on the automobile. However, with the projected population growth, the future demand on State facilities and interchanges will exacerbate current conditions. Therefore, the City should continue to work with its stakeholders to maintain its public streets and roads and work with Caltrans to identify funding strategies for the State Highway System in absence of inclusive program.

Caltrans recognizes that we live in an area where our population is very automobile dependent. As the population grows, we do not have the capability to move people solely on the State Highway System thus creating the need for an integrated transportation system with our various local partners, such as the City, that offers multi-modal options. This understanding has created a cultural change within Caltrans. For example, we have recently endorsed the National Association of City Transportation Officials (NACTO) Urban Street Design Guide and the Urban Bikeway Design Guide. Caltrans also developed the Main Street, California and the 2040 California Transportation Plan.

Caltrans has the following comments:

A2-1

Comment Letter A2 *cont.*



1. On Page 3-1, Section 3.1, under *Project Location*, the first paragraph, second sentence should include a statement that describes State Route (SR) 99 as a designated *High Emphasis Focus Route* on the Interregional Transportation Strategic Plan. **A2-2**
2. As shown in Figure 3-5 – Growth Areas and Figure 3-6 – Development Areas, focuses growth west and southwest of SR 99. SR 99 is an interregional facility that is already under tremendous strain in the existing condition. Directing growth west and southwest of SR 99 may significantly increase traffic to SR 99 due to the addition of local commuter traffic that would occur on this interregional goods movement corridor, therefore the City should work with Caltrans on Intelligent Transportation Systems to minimize impacts. **A2-3**
    a. Development west of SR 99 may also impact SR 180. The General Plan proposes light industrial development in the path of the future freeway extension of SR 180. The City should work with Caltrans to preserve the right-of-way for the future SR 180 corridor as well as the interchanges. This sort of planning will drive the need for the SR 180 west extension but currently there is no funding in place.
3. On Page 3-8, Policy Number MT-2-m, under *Use VMT analysis for CEQA*, indicated that changes to the California Environmental Quality Act (CEQA) require the development of a new approach for analyzing transportation impacts under CEQA. The new approach will eliminate vehicle delay and level-of-service for CEQA impacts for many parts of California. However, it should be noted that safety will remain the priority for all State facilities. As previously commented, a true analysis of a freeway segment is much more complex than simply equating the number of lanes to a level-of-service. It would require a weaving analysis, merging analysis, and diverging analysis. Analysis of the freeway interchange would require intersection analysis, queuing analysis, and stopping distance analysis. Queuing on ramps can result in severe safety deficiency due to reduced stopping distances and traffic backed up onto the mainline through lanes. **A2-4**
4. On Page 3-9, middle of the third paragraph, indicates that purposefully designed congestion incentivizes the use of transit or other modes of transportation that more efficiently move people and is better for air quality. However, as previously commented, the data would seem to suggest that even with significant increases in pedestrian, bike, and transit use, the future demand on the freeways and interchanges would nevertheless continue to increase due to natural increases in population. It is thus unlikely that the number of trips that would convert from individual motor vehicles to these other modes of transportation could be offset by the projected increase of population. Additionally, increasing congestion would negatively impact air quality by increasing the travel time a vehicle takes to complete the same trip distance. The increased time would result in an increase in the amount of air pollutants that the vehicle discharges. **A2-5**
5. On Page 3-18, under Section 3.2.7 *Infill Areas* and on Page 4.3-28, *Objective UF-12*, the City should consider a Park and Ride in this area particularly near the SR 180/Clovis Avenue interchange. **A2-6**
6. On Page 4.3-37, Policy MT-1-o: *LOS Deviations Outside of Activity Centers and Areas Designated for Mixed-Use*, states that the project would not substantially increase hazards due to a design feature or incompatible uses. Acceptance of vehicle LOS E or F conditions outside of identified multi-modal districts only if provisions commensurate with the level of **A2-7**

impact and approved by the City Traffic engineer are made to sufficiently improve the overall transportation system and promote non-vehicular transportation as part of a development project. However, as previously commented, Caltrans will determine measures and standards that facilities under its jurisdiction shall employ. Additionally, Caltrans would be concerned with the possibility of congested ramp intersections causing traffic to back up onto the freeway mainlines. This could result in the creation of potential situations where vehicles exiting the freeway mainline at a high speed do not have adequate stopping distance on the ramp due to backup. Also, if the ramp queue backs up all the way to the freeway mainline, there could be additional concern due to the expectation of continuously moving traffic on the freeway mainline lanes. **A2-7 cont.**

7. On Page 4.3-39, Policy MT-5-d: *Pedestrian Safety*, indicates Minimize vehicular and pedestrian conflicts on both major and non-roadways through use of traffic design and control measures that reduce congestion and increase safety. For the downtown area, the City should employ some type of mechanism or trigger for improvements. **A2-8**
8. On Page 4.11-14, LU-7-a, *Incentives for a Diversity of Industries, Increased Food Processing and Manufacturing, and related Employment Opportunities in Fresno*, in the commentary section, both SR 41 and SR 99 are currently impacted at the North/Cedar Avenue interchanges. The City should continue to collaborate with Caltrans to identify funding sources to allow for interchange improvements to accommodate the future growth. **A2-9**
9. On Page 4.16-2, under Section *4.16.3.1 Roadway Network*, Caltrans prepares and periodically updates the Transportation Concept Report (TCR). The TCR is a long-range system-planning document that establishes a planning concept for a state highway corridor through the future year. The TCR provides the route, traffic data, and operating characteristics for Caltrans District 6 State highway corridors and should be referred to when development occurs near the State facility. **A2-10**
10. On Page 4.16-4, it is noted in the first paragraph that the analysis of traffic operations was conducted on roadway segments representative of the City's overall transportation network, and that the roadway segment analysis is based on traffic counts taken at a single location or link that is intended to be representative of the entire segment. However, while this approach of examining segments and relying on data collected at spot locations to represent that entire segment is satisfactory for very broad planning applications, it is too simplistic for determining the operation of specific elements of a freeway segment or freeway interchange. Analysis of the freeway interchange would require intersection, queuing, and stopping distance analysis. **A2-11**
11. On Page 4.16-19, Implementing Policy MT-1-c, directs the Director of Transportation to prepare and adopt official plan lines or other documentation needed to preserve or obtain right-of-way (ROW) for planned improvements to transportation corridors, roadways, and bike/pedestrian paths. However, there does not appear to be any similar implementing policy that would preserve right-of-way for possible future improvements to State facilities. Caltrans recognizes the importance of preserving ROW; we suggest incorporating similar policy regarding State facilities. This could be accomplished by including Caltrans' Transportation Concept Reports (TCRs) and other documentation as part of the City's policies. **A2-12**

12. On Page 4.16-19, Implementing Policy MT-4-g, the City should include the following language: Caltrans has indicated that California's transportation system cannot meet the State's needs with just highways and supports guidelines meant to improve Caltrans' design of bicycle facilities. The guidelines were developed by the American Association of State Highway Transportation Officials and the National Association of City Transportation Officials. These guidelines promote a network of Class 1 bicycle facilities that connect major origins and destinations linked with a network of Class 2 facilities on all possible streets. A Class 1 bicycle facility is situated on a separate right-of-way or with some sort of physical barrier placed on the street between the bicycle and motor vehicle, while a Class 2 facility shares the travel way with motor vehicles separated by striping. These standards should be considered as transportation system developments so as not to preclude future design options. **A2-13**
13. On Page 4.16-20, Implementing Policy MT-1-l, indicates that vehicle LOS F conditions would be acceptable during peak hours for segments and intersections within the Downtown Planning Area. However, as previously commented, those facilities under State jurisdiction would need to be analyzed using methods and assumptions approved by Caltrans. Also, Caltrans will determine measures and standards that facilities under its jurisdiction shall employ. **A2-14**
14. On Page 4.16-23, it is indicated that Traffic Impact Zone I (TIZ-I) represents the Downtown Planning Area. A peak hour LOS standard of F or better would be maintained for all intersections and roadway segments. However, as previously commented, those facilities under State jurisdiction would need to be analyzed using methods and assumptions approved by Caltrans. Also, Caltrans will determine measures and standards that facilities under its jurisdiction shall employ. **A2-15**
15. On Page 6-4, *6.3.2 Project Objectives,* it is indicated that General Plan Objective No. 13 includes emphasizing the City as a role model for environmental quality. However, later in the document it is indicated that the City proposes to allow selected locations in the city to operate at unsatisfactory traffic levels-of-service. Allowing increasing traffic congestion would appear to act against General Plan Objective No. 13. Increasing congestion would negatively impact air quality by increasing the travel time a vehicle takes to complete the same trip distance. The increased time would result in an increase in the amount of air pollutants that the vehicle discharges. **A2-16**
16. On Page 6-4, 6.3.2 Project Objectives, it is indicated that General Plan Objective No. 14 includes providing a network of walking and biking trails to benefit the health of residents. Caltrans supports guidance meant to provide flexibility for bicycle facility design. The American Association of State Highway Transportation Officials and the National Association of City Transportation Officials publications help as a guide to Caltrans' philosophy and flexible approach toward designing multimodal transportation projects. These guides promote a network of Class I, Class II and Class III bicycle facilities that connect major origins and destinations. These guides should be considered in all transportation system developments to include flexibility in future design options. **A2-17**

Comment Letter A2 *cont.*



We concur with the City in that in the "No Project" scenario, the approved General Plan would not be updated to reflect conformance with SB 743, and no updates to the Greenhouse Gas Reduction Plan would occur. Following recent approval of SB 743, assessing potential environmental impacts relative to VMT will be required after July 1, 2020. As result, Caltrans' 2002 *Guide for the Preparation of Traffic Impact Studies* is in the process of being updated to include VMT analysis and should be available by July 1, 2020. **A2-18**

SB 375 formalized the connection between land use planning and transportation. Population growth is eminent. The General Plan is indicating that the "Vehicle Miles Traveled (VMT)" is projected to more than double (9,395,800 to 19,883,400 weekday) with full build-out. Furthermore, with the funding constraints in transportation that we are compelled to contend with, we are learning that we cannot necessarily afford to build our way out of congestion. While there is still opportunity to expand infrastructure in our region, we will also need to manage our transportation infrastructure more efficiently. This can only be done by working together, maximizing funding opportunities (i.e. all-inclusive Regional fee programs) to develop a well-integrated system that offers various alternative modes for our residents. **A2-19**

If you have any further questions, please contact me at (559) 444 2493.

Sincerely,

DAVID PADILLA
Associate Transporation Planner
Division of Transportation Planning

c: Jamaica Gentry, Acting Chief, Planning North Branch, Caltrans

**This page intentionally left blank**

Comment Letter B1

**From:** Brenda Veenendaal [mailto:comments@fresnocog.org]
**Sent:** Friday, April 24, 2020 3:23 PM
**To:** Sophia Pagoulatos
**Cc:** Ron Duarte
**Subject:** Re: Time Extension for Draft PEIR Public Comment Period

Sophia Pagoulatos, Planning Manager
City of Fresno Planning and Development Department
2600 Fresno Street, Room 3065, Third Floor
Fresno, CA 93721

Sophia,

Thank you for notifying me on behalf of the Fresno County Airport Land Use Commission of the availability and extended comment period for the City of Fresno's Draft PEIR for the General Plan. After running a staff level review of the PEIR I have drafted the following acknowledgements with appreciation for the City's airport land use inclusionary language:

1. No changes to the current land use diagram (Figure 3-3 of the PEIR) are proposed as part of this project. (3.2.5)
2. It is noted that sections 4.9.4 and 4.9.4.3 include discussions regarding the ALUCP and references the Fresno Municipal Code recent amendment to give the ALUCP priority over all other land use plans and zoning requirements.
3. All subject City of Fresno General Plan amendments will be brought before the ALUC as a "Responsible and Trustee Agency" as listed in section 3-25 of the PEIR, for approved Findings of Consistency.
4. The Fresno airports are each listed under Airport Hazards, page 4.9.8 in the PEIR as well as a FAA regulations Part 77 discussion included on page 4.9-10, with the explanation that regulations for hazards to air navigation retain a direct regulatory role.
5. Further reference to the ALUCP under HAZ-5 on page 4.9-25 and hazardous use requirements are sufficient.
6. Objective NS-5 duly noted as it related to airport noise and safety, as well as several other references to the Fresno County ALUCP.

As staff support to a regional body whose intent is to protect and promote the safety and welfare of residents, businesses, and airport users near the public use airports and Naval Air Station Lemoore in Fresno county, while supporting the continued operation of these facilities, I encourage the City of Fresno to continue to seek Fresno County ALUC Findings of Consistency as directed in section 2.8 of the Fresno County Airport Land Use Compatibility Plan.

B1-1

Sincerely,

Brenda Veenendaal
Administrative Services Manager
Public Information and Ridesharing Programs

Comment Letter B1 *cont.*

Fresno Council of Governments
2035 Tulare Street, Suite 201
Fresno, CA 93721
559.233.4148, ext. 219
brendav@fresnocog.org

Comment Letter B2

# Fresno Metropolitan Flood Control District

*Capturing Stormwater since 1956*

File 400.21

May 5, 2020

Sophia Pagoulatos, Planning Manager
City of Fresno
Planning and Development Department
2600 Fresno Street, Room 3065
Fresno, CA 93721

Dear Sophia,

**Notice of Availability of a**
**Program Environmental Impact Report for**
**The City of Fresno General Plan**

The District has reviewed the information provided from the proposed Notice of Availability of a Program Environmental Impact Report for the Fresno General Plan.

The District has adopted drainage master plans for the City of Fresno metropolitan area. These plans are based on the then adopted General and Specific Plan landuses. For this proposed Program Environmental Impact Report (PEIR), it is our understanding based on the Notice of Availability there will be no changes in land use as part of this project or major street alignments. The District understands that this project is essentially a necessary update and conversion of the previously-certified 2014 Master Environmental Impact Report (MEIR) to a PEIR in order to be in conformance with State law and consistent with recent legislative changes. Additionally, the PEIR is updating technical analyses to reflect current baseline conditions of 2019. B2-1

The District has commented on the previously-certified 2014 MEIR and offers the following factual and editorial comments specific to the review of the proposed PEIR (the individual pages are included and the section or sentence has been highlighted for your reference):

1. Page 1-33, Table 1-1: Executive Summary Matrix, Mitigation Measure HYD-3.2; Item 2 should be removed. B2-2
2. Page 4.10-2, Stormwater Drainage Section; the Planning Area consists of over 158 should be replaced with 132. B2-3
3. Page 4.10-3, Stormwater Drainage Section, second paragraph; should have a comma after the words parcels as they develop. B2-4

Comment Letter B2 *cont.*



4. Page 4.10-20, Hydrology and Water Quality Section, Long-Term Impacts:

   The proposed PEIR does not adequately reflect baseline conditions since the certification of the 2014 MEIR, Page 4.10-20 of the PEIR discusses the long-term impacts of the project's impact to water quality. Urban storm water discharges are regulated by Section 402(p) of the federal Clean Water Act. The City of Fresno, FMFCD, the County of Fresno, the City of Clovis, and the California State University, Fresno are currently covered as Co-Permittees for Municipal Separate Storm Sewer System (MS4) discharges through National Pollutant Discharge Elimination System (NPDES) General Order No. R5-2016-0040 and NPDES Permit No. CAS0085324 (Storm Water Permit) effective May 17, 2018. The previous Storm Water Permit adopted on May 31, 2013 required the adoption of Stormwater Quality Management Program (SWQMP) that describes the Storm Water Permit implementation actions and Co-Permittee responsibilities. That SWQMP was approved by the Central Valley Regional Water Quality Control Board on April 17, 2015 as is effective until adoption of a new SWQMP, which is anticipated within the next two years.

   The PEIR states on page 4.10-20 that: "This Phase I MS4 Permit requires that the City of Fresno and its Co-Permittees implement water quality and watershed protection measures for all development projects." Although correct, this statement does not adequately describe the scope of the Storm Water Permit. First, the Storm Water Permit includes water quality and watershed protection measures for <u>all discharges</u> to the storm drainage system, not only development projects. Development projects are subject to specific measures included in the Storm Water Permit and implemented as described in the SWQMP. The SWQMP should be incorporated by reference in the PEIR. The SWQMP can be found at the link below: **B2-5**

   http://www.fresnofloodcontrol.org/wp-content/uploads/2015/11/Stormwater-Quality-Management-Plan-2013.pdf

   The Storm Water Permit requires that Co-Permittees update their CEQA process to incorporate procedures for considering potential stormwater quality impacts when preparing and reviewing CEQA documents. This requirement is found on Provision D.14 of the 2013 Storm Water Permit and in Section 7: Planning and Land Development Program – PLD 3 – Update CEQA Process. The District has created a guidance document that will meet this Storm Water Permit requirement entitled Guidance for Addressing Stormwater Quality for CEQA Review, which has been attached. Following the Guidance document will meet District CEQA water quality requirements.

Comment Letter B2 *cont.*



Secondly, the City of Fresno's authority as a land use agency gives the City of Fresno responsibility to implement certain storm water quality measures. The SWQMP requires a Memorandum of Understanding (MOU) between the District and the City of Fresno that identify those activities best suited for the City of Fresno to perform related to planning, inspection and enforcement of NPDES Permit requirements. The District has a current MOU adopted in 2014 and this MOU will need to be updated after adoption of the next SWQMP. Since the 2014 MEIR was certified, the following regulatory programs have been adopted by the State Water Resources Control Board that the City of Fresno must coordinate with FMFCD to effectively implement: **B2-6**

- Amendment to the Water Quality Control Plan for Part 1 Trash Provisions of the Water Quality Control Plan for Inland Surface Waters, Enclosed Bays, and Estuaries of California; and
- Amendment to the Water Quality Control Plan for the Sacramento and San Joaquin River Basins for the Control of Pyrethroid Pesticide Discharges.

5. Page 4.10-28, Second paragraph; One hundred thirty (130) should be corrected to One hundred thirty-two (132). **B2-7**
6. Page 4.10-28, Second paragraph; One drainage area discharges… should be corrected to Two. Seven discharges to the river… should be corrected to Six. **B2-8**
7. Page 4.10-30, Paragraphs 2 and 7; FCMFCD should be corrected to say FMFCD. **B2-9**
8. Page 4.10-30, Mitigation Measure HYD-3.2; Item 2 should be removed. **B2-10**
9. Page 4.10-31, Paragraphs 2 and 5; FCMFCD should be corrected to say FMFCD. **B2-11**
10. Page 4.17-6, Last paragraph; 170 should be corrected to 165. **B2-12**
11. Page 4.17-6, Last paragraph add comma and include additional language; , two drainage areas directly discharge to the San Joaquin River. **B2-13**
12. Page 4.17-6, Last sentence; should be corrected from 108 inches to 96 inches. **B2-14**
13. Page 4.17-7, Second paragraph; over 170 should be corrected to say 165. Six cases should be corrected to eight. Four discharge should be corrected to six. **B2-15**

Comment Letter B2 *cont.*



14. Page 4.17-7, Last paragraph; Remove the words "Community Block Grants and" from the sentence. **B2-16**

15. Page 4.17-26, Stormwater Section, second paragraph; should say 132 individual drainage areas. **B2-17**

Thank you for the opportunity to comment. If you have any questions or require further information, please do not hesitate to contact the District at (559) 456-3292. **B2-18**

Very truly yours,

Denise Wade
Master Plan and Special Projects Manager

Jared Shuman
Environmental Resources Manager

DW/lrl

Attachments

c: Debbie Campbell, Fresno Metropolitan Flood Control District

## Table 1-1: Executive Summary Matrix

| Potential Environmental Impact | Level of Significance Before Mitigation | Mitigation Measures | Level of Significance After Mitigation |
|---|---|---|---|
| | | imperviousness to install, operate, and maintain FMFCD approved on-site detention systems to reduce the peak runoff rates resulting from the increased imperviousness to the peak runoff rates that will not exceed the capacity of the existing stormwater collection systems.<br><br>**Mitigation Measure HYD-3.2:** The City shall implement the following measures to reduce the impacts on the capacity of existing or planned SDFCMP retention basins:<br><br>Prior to approval of development projects, coordinate with FCMFCD to analyze the impacts to existing and planned retention basins to determine remedial measures required to reduce the impact on retention basin capacity to less than significant. Remedial measures would include:<br>1. Increase the size of the retention basin through the purchase of more land or deepening the basin or a combination for planned retention basins.<br>2. ~~Increase the size of the emergency relief pump capacity required to pump excess runoff volume out of the basin and into adjacent canal that convey the stormwater to a disposal facility for existing retention basins.~~<br>3. Require developments that increase runoff volume to install, operate, and maintain, Low Impact Development (LID) measures to reduce runoff volume to the runoff volume that will not exceed the capacity of the existing retention basins. | |

Remove Item 2.



Comment Letter B2 *cont.*

Comment Letter B2 *cont.*



### 4.10.3 Existing Environmental Setting

#### 4.10.3.1 Precipitation

Precipitation in the Planning Area occurs mostly as rain during the months of November through April. Climate data collected from 1948 to 2016 shows that annual rainfall averaged 10.89 inches, but is variable. Recorded annual rainfall has ranged from a low of 3.01 inches in 2013 to a high of 21.61 inches in 1983.[1]

#### 4.10.3.2 Hydrology

The San Joaquin River and the Kings River are the principal rivers that influence the hydrology in the Planning Area. The western slopes of the Sierra Nevada drain to the west via the San Joaquin and Kings Rivers. The Kings River is connected to the San Joaquin River by the James Bypass, a manmade canal. Floodwater from the Kings River is diverted to the San Joaquin River. Three dams control flows on the two rivers. The Friant and Mendota Dams are located on the San Joaquin River. These two dams provide some flood control; however, these two dams were not designed for the purpose of flood control. The Pine Flat Dam was built for the purpose of flood control. In addition to the dams on the two rivers, there are reservoirs and detention basins that have been constructed to prevent flooding. These facilities include the Redbank Dam and the Redbank-Fancher Creeks Flood Control Project. The Project area includes two dams (Big Dry Creek Dam and Fancher Creek Dam), three detention basins (Redbank Creek, Pup Creek, and Alluvial Drain Detention Basins), and canals to convey discharges in and around the City of Fresno. These facilities were designed to protect developed areas from a 200-year storm event.[2]

Per 2016 District Services Plan correct to: 132

**Stormwater Drainage.** Storm drainage facilities within the Fresno-Clovis Metropolitan area are planned, implemented, operated and maintained by the FMFCD. The storm drainage facilities a documented in the Storm Drainage and Flood Control Master Plan (SDFCMP), which is developed and updated by FMFCD. The master plan drainage system for the Planning Area consists of ~~over~~ 158 individual drainage areas or urban watersheds. Drainage area boundaries are determined by geographic and topographic features and the economics of providing storm drainage service to the watershed. The storm drainage facilities within a drainage area consist of storm drain inlets, pipeline, retention basins, urban detention (water quality) basins, and stormwater pump stations. Surface grading improvements such as streets, curbs, gutters, and valley gutters are part of the City of Fresno infrastructure, but the general grading of these features is governed by the SDFCMP to provide a coherent implementation of drainage within the Planning Area.

Storm drain inlets are located at low points in the topography as determined by the SDFCMP. Pipeline alignments and sizes are also shown on the SDFCMP. Pipeline alignments are subject to change as development proposals are put forward by development projects. Retention basins and urban detention basins locations and geometry are part of the SDFCMP as well. Basins are sited in the topographic low point of the drainage area. All of the storm drainage pipelines are directed to

---

1 Western Regional Climate Center. Period of Record Monthly Climate Summary, Fresno Yosemite Intl AP, California (043257). Average Total Precipitation (inches). Website: wrcc.dri.edu/cgi-bin/cliMAIN.pl?ca3257 (accessed February 12, 2020).

2 Fresno, County of. 2000. *Fresno County General Plan Background Report*.

Comment Letter B2 *cont.*



the retention and urban detention basins. Retention basins store and percolate stormwater from the drainage area if time between storms permits, or is otherwise pumped to designated irrigation canals. Urban detention basins provide quiescent (still) conditions for the removal or settling out of suspended solids prior to discharge of the stormwater to the San Joaquin River.

The Fresno-Clovis Metropolitan area consists of drainage areas that are completed, e.g., all of the master planned facilities are constructed and functional; or in the process of being completed, e.g. portions of the retention basins, pipelines, and inlets are constructed and portions are not. For the drainage areas that are in the planning stage, e.g., the drainage area is planned and documented, the retention basin land may add comma: , sed, but no construction has occurred. Implementation of the SDFCMP occurs in response to development activity in newly developing areas and through Capital Improvement Project (CIP) planning in previously developed areas. Funding for storm drainage facilities occurs through the collection of drainage fees assessed on parcels as they develop through grant funding from the State of California and the Federal Government, through low interest infrastructure improvement bonds, and in the past, through assessment districts. Drainage fees fund the majority of the construction of master plan facilities in newly developing areas. Grants, infrastructure loans, and assessment districts fund the majority of construction in previously developed drainage areas.

**Groundwater.** The Planning Area is underlain by the Kings River Sub-basin, which, along with six other sub-basins, comprises the San Joaquin Valley Groundwater Basin. In turn, the San Joaquin Basin is located within the Tulare Lake Hydrologic Region. The Tulare Lake Hydrologic Region spans approximately 10.9 million acres (17,000 square miles) and includes most of Fresno County. The Region encompasses the southern one-third of the Central Valley Regional Water Quality Control Board (RWQCB) jurisdiction.

The Kings River Sub-basin extends from the Sierra Nevada foothills on the east to the San Joaquin Valley trough on the west, and from the San Joaquin River on the north to roughly the Fresno County line on the south.

Historically, water demand within the Planning Area has been met by extracting groundwater from the Kings Sub-basin. Groundwater levels since 1990 have declined from less than 0.5 feet per year in the southwest portion of the downtown area, to a rate of 1.5 feet per year for northern and southern areas of the city, to a maximum of 3 feet per year in the northeastern area of the city. A groundwater mound is located near the Fresno-Clovis Regional Wastewater Reclamation Facility (Regional Facility) as a result of the disposal of treated effluent at the FCRWRF percolation basins.

Groundwater used by the City to meet its demands is replenished by three different methods:

- Natural recharge
- Net Subsurface inflow
- Intentional groundwater recharge

Comment Letter B2 *cont.*



Continued implementation of the approved General Plan would result in industrial, commercial, residential, and mixed-use land uses that would re-grade undeveloped land to new grading patterns and would increase impervious surfaces that would increase stormwater runoff rates and volumes. Redevelopment of existing land uses, such as changing a residential land use area to a multi-family land use area, which has a greater level of imperviousness, will also increase stormwater runoff rates and volume. Increased runoff rates and greater volumes of stormwater runoff co the capacity of existing or planned stormwater drainage systems or could increase poll

Correct to: One hundred thirty-two (132)

FMFCD's Storm Drainage and Flood Control Master Plan divides the Planning Area into a number of drainage areas or urban watersheds. Each drainage area has its own Master Planned pipeline collection system and retention or urban detention basin. ~~One hundred thirty (130)~~ master planned drainage areas are completely or partially within the Planning Area. Three of the master planned drainage areas have collection systems, but do not have retention basins. The disposal of stormwater from these drainage areas occurs by pumping the stormwater directly into a nearby irrigation canal. Eight of the master planned drainage areas discharge to the San Joaquin River. ~~One~~ drainage area discharges directly to the river. ~~Seven~~ discharge to the river from urban detention (water quality) basins.

Correct to match FMFCD Service Plan page 44: Two

Correct to match FMFCD Service Plan page 44: Six

The Storm Drainage and Flood Control Master Plan is use he proposed facilities that are used to develop drainage fees. The drai oject proponents at the time they obtain entitlements. The fees are used to pay for the cost of constructing the Master Plan pipeline collection and obtaining land and constructing retention or urban detention basin disposal facilities within each drainage area.

The buildout of the Fresno metropolitan area and continued implementation of the approved General Plan would result in the development of permeable land uses such as farming or vacant land to impervious land uses such as residential, multifamily residential, commercial, and industrial. Conversion of land to more impervious land uses that are unmitigated, always results in higher peak stormwater runoff rates and greater volumes of runoff from that land. Where development is an infill condition, such as within existing urbanized areas, master planned storm drainage facilities are generally available and are designed to provide service to the site as long as the development is consistent with the approved General Plan. There are locations within the urbanized area where master planned storm drainage facilities are not fully available and runoff from the proposed developments would exceed the ability of existing storm drainage facilities to provide service to the developments. Likewise, there may be cases where proposed development would result in a greater level of imperviousness than what was planned in the Storm Drainage and Flood Control Master Plan. In these cases, the stormwater runoff from the proposed development would exceed the ability of the existing storm drainage facilities to provide service to the developments.

Continued implementation of the approved General Plan polices, along with preparation, implementation, and participation of the NPDES Permit would reduce project-specific impacts on water quality associated with the significant increase in stormwater runoff. However, as new development is proposed, stormwater runoff would be affected. As a result, a potentially-significant impact would occur.

Comment Letter B2 *cont.*



Correct to: FMFCD

**Mitigation Measure HYD-3.2** The City shall implement the following measures to reduce the impacts on the capacity of existing or planned SDFCMP retention basins:

Prior to approval of development projects, coordinate with ~~FCMFCD~~ to analyze the impacts to existing and planned retention basins to determine remedial measures required to reduce the impact on retention basin capacity to less than significant. Remedial measures would include:

1. Increase the size of the retention basin through the purchase of more land or deepening the basin or a combination for planned retention basins.

Remove Item 2.

2. ~~Increase the size of the emergency relief pump capacity required to pump excess runoff volume out of the basin and into adjacent canal that convey the stormwater to a disposal facility for existing retention basins.~~

3. Require developments that increase runoff volume to install, operate, and maintain, Low Impact Development (LID) measures to reduce runoff volume to the runoff volume that will not exceed the capacity of the existing retention basins.

Correct to: FMFCD

**Mitigation Measure HYD-3.3** The City shall implement the following measures to reduce the impacts on the capacity of existing or planned SDFCMP urban detention (stormwater quality) basins:

Prior to approval of development projects, coordinate with ~~FCMFCD~~ to determine the impacts to the urban detention basin weir overflow rates and determine remedial measures required to reduce the impact on the detention basin capacity to less than significant. Remedial measures would include:

1. Modify overflow weir to maintain the suspended solids removal rates adopted by the FMFCD Board of Directors.

2. Increase the size of the urban detention basin to increase residence time by purchasing more land. The existing detention basins are already at the adopted design depth.

3. Require developments that increase runoff volume to install, operate, and maintain, Low Impact Development (LID) measures to reduce peak runoff rates and runoff volume to the runoff rates and volumes that will not exceed the weir overflow rates of the existing urban detention basins.

Comment Letter B2 *cont.*



**Mitigation Measure HYD-3.4** The City shall implement the following measures to reduce the impacts on the capacity of existing or planned SDFCMP pump ~~disposal~~ systems:

Correct to: FMFCD

1. Prior to approval of development projects, coordinate with ~~FCMFCD~~ to determine the extent and degree to which the capacity of the existing pump system will be exceeded.

2. Require new developments to install, operate, and maintain on-site detention facilities, consistent with FMFCD design standards, to reduce peak stormwater runoff rates to existing planned peak runoff rates.

3. Provide additional pump system capacity to maximum allowed existing permitting to increase the capacity to match or exceed the peak runoff rates determined by the SDFCMP.

Correct to: FMFCD

**Mitigation Measure HYD-3.5** The City shall coordinate with ~~FCMFCD~~ to develop and adopt a storm drainage update to the SDFCMP for the Southeast Development Area that is designed to collect, convey and dispose of runoff rates and volumes based on the planned land uses of the approved General Plan.

**Level of Significance With Mitigation:** Less Than Significant Impact.

***In flood hazard, tsunami, or seiche zones, risk release of pollutants due to project inundation.***

Development of housing in floodplains places those homes in danger of repeated flooding from sources of flooding, including the San Joaquin River and a number of foothill creeks that flow into the Planning Area. These include Big Dry Creek and its associated Dry Creek Canal, Redbank Creek, and Fancher Creek. Pup Creek, Alluvial Drain, and Dog Creek are tributaries of these three main creeks. Big Dry Creek is regulated by the Big Dry Creek Dam and Reservoir. Fancher Creek is regulated by Fancher Creek Dam and Fancher Creek Detention Basin. Redbank Creek is regulated by Redbank Dam and Redbank Creek Detention Basin.

The San Joaquin River forms the northern boundary of the Planning Area as well as the northern boundary of Fresno County. The San Joaquin River is regulated by Friant Dam, which creates Millerton Lake reservoir. The dam was constructed in 1942 to provide flood control to the San Joaquin River and to harvest runoff from the San Joaquin River for irrigation purposes. The dam is administered by the U.S. Bureau of Reclamation.

Big Dry Creek Dam and Reservoir, located north of the intersection of Shepherd Avenue and Temperance Avenue was originally constructed in 1948 by the U.S. Army Corps of Engineers (USACE) to protect the cities of Clovis and Fresno from this significant source of flooding. The dam was enlarged in 1993 by the USACE as part of the Redbank and Fancher Creek Flood Control Project to provide protection to the communities from the probable maximum flood event from Big Dry Creek.

Comment Letter B2 *cont.*



In 2010, the City adopted the Recycled Water Master Plan that includes an evaluation of potential recycled water use areas throughout the City, and evaluates a number of alternatives for the production and delivery of recycled water. The Recycled Water Master Plan recommended the construction of a tertiary treatment system at the RWRF with the ultimate capacity of 30 mgd (approximately 33,600 AF/year). Phase I of the tertiary treatment system with a design flow of 5.0 mgd has been completed. A recycled water distribution system has been developed in the southwest area of the city due to its proximity to the RWRF.

***North Fresno Wastewater Reclamation Facility.*** The North Fresno Wastewater Reclamation Facility (NFWRF) is located in north Fresno, near the intersection of Copper Avenue and Cedar Avenue. It was constructed in late 2006 to provide wastewater treatment service for residential and commercial development in the surrounding area of north Fresno. The NFWRF employs a sequencing batch reactor (SBR) treatment process for secondary treatment, cloth media filtration for tertiary treatment, and an ultraviolet system to produce disinfected tertiary treated effluent. The effluent is used for golf course irrigation at the nearby Copper River Country Club.

The permitted capacity of the NFWRF is 0.71 mgd as an average monthly flow, and 1.07 mgd as a maximum daily flow. The City's master plan for the NFWRF calls for ultimate expansion to an average monthly flow capacity of 1.25 mgd upon full development of the NFWRF service area.

***Other Area Wastewater Treatment Facilities.*** The City of Clovis owns and operates the Clovis Sewage Treatment/Water Reuse Facility (STWRF), located near the intersection of Ashlan Avenue and McCall Avenue, southeast of the City of Clovis. It produces disinfected tertiary recycled water used for irrigation and possible compatible industrial uses. The STWRF is permitted to discharge an average annual flow of 2.8 mgd. Future Phases 2 and 3, pending capacity requirements and allocated funding, are planned to have average flow capacities of 5.6 mgd and 8.4 mgd, respectively.

Malaga County Water District owns and operates a wastewater treatment plant south of the City of Fresno, near the intersection of Maple Avenue and Central Avenue. It provides wastewater treatment service only for properties within the boundaries of Malaga County Water District.

### 4.17.3.3 Stormwater

Correct to: 165

Stormwater collection and disposal, and flood control for the City of Fresno, City of Clovis, and the unincorporated areas within the City of Fresno's sphere of influence are provided by the Fresno Metropol[illegible] The FMFCD is a special district created by the State of California [illegible]rs of the district in 1956. FMFCD has ~~more than 170~~ urban wa[illegible]noff and dispose of the runoff in retention basins, local canals, or the San Joaquin River. Each urban watershed, called a drainage area by FMFCD, consists of a collection system and, in most cases, a retention basin to store and dispose of the runoff. Three drainage areas are pumped directly into a nearby canal and six drainage areas have collection systems that discharge to the San Joaquin River. Pipeline collection systems have diameters that range from 15 inches to ~~108~~ inches. Retention basins range in size from 5 acres to 25 acres, with

Add: , two drainage areas directly discharge to the San Joaquin River

Correct to: 96

Comment Letter B2 *cont.*



Per FMFCD District Service Plan page 44: 165

most being 8 to 10 acres in size. The flood control system consists of three dams and res detention basins, one diversion channel, and up to 175 miles of rural stream channels.

**Stormwater Collection and Disposal.** FMFCD provides drainage service to the Fresno metropolitan area. In order to provide this service, the FMFCD has organized the metropolitan area into ~~over 170~~ urban drainage areas or watersheds. Watersheds are delineated along topographic boundaries and are limited in size to between 200 acres to 600 acres. The area limitation reduces the size of the required collection facilities and disposal facilities. The service is provided through the combination of surface drainage improvements, chiefly curbs and gutters, that direct ru inlets, which collect the runoff and convey the runoff to underground pipel systems convey the stormwater to disposal facilities, which i l, unlined basins. In three cases, the collection systems discha from which the stormwater is lifted into an adjacent canal, and in ~~six~~ cases, the stormwater is discharged into the San Joaquin River. Two of these systems discharge directly to the San Joaquin River and ~~four~~ discharge to a water quality basin before discharge to the river occurs.

Per FMFCD District Service Plan page 44: eight

Per District Service Plan page 44: six

The collection systems are designed to provide one foot of freeboard in the pipeline collection system designed to convey runoff rates generated by rainfall intensity up to and including a 50% probability of occurrence (a 2-year return frequency). There are exceptions to this design standard in areas of the City where older drainage systems were installed prior to the formation of the FMFCD, or constructed in the very early years of the FMFCD, and shifts in land use densities have eroded the level of service. FMFCD documents the deficiencies and develops master planned solutions to these deficiencies as they are identified.

Retention basins are designed to provide storage for up to 6 inches of rainfall on the drainage area watershed given typical runoff to rainfall ratios used for urban drainage design. Again, there are exceptions to this design standard, notably in those retention basins constructed prior to 1969 when the design criteria was changed to increase the storage volume. The change resulted from the extreme rainfall events of the spring of 1969 and the resulting flooding at the then-existing basins. Water quality basins are designed in accordance with the US Environmental Protection Agency's design standards to remove sediments and trash prior to discharge of stormwater to the San Joaquin River. They provide quiescent conditions for settling of suspended solids within a holding basin prior to discharge from the basin via an overflow weir. The water quality basins alternate between wet and dry, depending on the season and amount of rainfall that has occurred within the drainage area.

Remove from sentence

FMFCD has utilized three means to implement drainage systems for the metropolitan area. One method has been to use ~~Community Block Grants and~~ low interest infrastructure loans from the State of California to construct drainage facilities in the older, previously developed areas of the City. A second method has been to form assessment districts under the provisions of the 1915 Bond Act. Assessment districts were formed based on drainage area boundaries, the parcels within the assessment districts were assessed a proportional share of the cost of the collection and disposal system, and the drainage system for the drainage area was constructed. The third and currently employed method is to collect drainage fees from parcels as they develop based on their prorated share of the cost of the drainage area collection and disposal systems. The implementing ordinance

projects are submitted, and shall not approve development that would generate additional wastewater and exceed the capacity of a facility until additional capacity is provided.

**Level of Significance With Mitigation:** Significant and Unavoidable Impact. Construction and operation of the identified improvements could result in project-specific impacts that are not currently known because the facilities have not been designed. Prior to approval of each facility, the City shall conduct appropriate environmental analyses for each facility to determine whether environmental impacts would occur. Until environmental evaluations have occurred, potential impacts would be considered significant and unavoidable.

**Stormwater**

As development occurs throughout the Planning Area in accordance with the approved General Plan, new and expanded storm water drainage facilities will be needed to adequately accommodate the increases in storm water flow due to the addition of impervious surfaces. Although specific locations and impacts have not been identified, continued implementation of the approved General Plan could result in impacts related to construction of new and/or expanded storm water drainage facilities.

Fresno Planning Area Basins : 132

Storm drainage facilities within the Planning Area as well as within Clovis are planned, implemented, operated, and maintained by the FMFCD. The existing and planned storm drainage facilities are documented in the Storm Drainage and Flood Control Master Plan (SDFCMP), which is developed and updated by FMFCD. The master plan drainage system for the Planning Area consists of approximately 160 individual drainage areas or urban watersheds. The majority of the Planning Area is located within one of the individual drainage areas or urban watersheds.

In 2016, the FMFCD approved the 2016 District Services Plan (Services Plan) that included flood control, local stormwater drainage, water conservation, and recreational uses within its service area. This program includes facilities to accommodate future growth in accordance with land use identified in the City of Fresno's approved General Plan. These facilities include conveyance systems such as streets and gutters, storm drain inlets, storm drain pipelines, detention and retention basins, pump stations, and outfall facilities that collect and drain runoff from developed land areas. The environmental analysis prepared for the 2016 Services Plan Update adequately addresses the potential impacts associated with future stormwater facilities consistent with the approved General Plan. The Final Subsequent EIR that was certified for the 2016 Services Plan is hereby incorporated by reference into this Program EIR. As a result, because mitigation was proposed to address potential impacts with future stormwater facilities, a less-than-significant impact would occur.

**Applicable Laws, Regulations, Relevant Land Use Policies**

- Refer to the approved General Plan policies and objectives identified in Section 4.17.5, Local Policies and Regulations, above.

**Level of Significance Without Mitigation:** Less Than Significant Impact.

Comment Letter B2 *cont.*

# Fresno Metropolitan Flood Control District

Guidance for Addressing Stormwater Quality for CEQA Review

## Stormwater Checklist for CEQA Review

**a. Potential impact of project construction on stormwater runoff.**

Stormwater runoff from construction activities can have a significant impact on water quality. To build on sites with over one acre of disturbed land, property owners must obtain coverage under the California Construction General Permit for Discharges of Stormwater (CGP). The CGP is issued by the State Water Resources Control Board (SWRCB). The CGP requires sites that do not qualify for an erosivity waiver to create a Stormwater Pollution Prevention Plan (SWPPP). The SWPPP is a site-specific plan that is designed to control the discharge of pollutants from the construction site to local storm drains and waterways.

**b. Potential impact of project post-construction activity on stormwater runoff.**

FMFCD operates the Regional Stormwater Mitigation System, which consists of facilities to handle stormwater runoff and non-stormwater discharges in the FMFCD service area. However, river discharging drainage areas and drainage areas without basin service are subject to FMFCD Policy: Providing for Compliance with Post-Development and Industrial Storm Water Pollution Control Requirements (Policy).

Development and redevelopment projects can result in discharge of pollutants to receiving waters. Pollutants of concern for a project site depend on the following factors:

- Project location;
- Land use and activities that have occurred on the project site in the past;
- Land use and activities that are likely to occur in the future; and
- Receiving water impairments.

As land use activities and site design practices evolve, particularly with increased incorporation of stormwater quality BMPs, characteristic stormwater runoff concentrations and pollutants of concern from various land use types are also likely to change.

**Typical Pollutants of Concern and Sources for Post-Development Areas**

| Pollutant | Potential Sources |
|---|---|
| Sediment (total suspended solids and turbidity), trash and debris (gross solids and floatables) | Streets, landscaped areas, driveways, roads, construction activities, atmospheric deposition, soil erosion (channels and slopes) |

Comment Letter B2 *cont.*

| | |
|---|---|
| Pesticides and herbicides | Residential lawns and gardens, roadsides, utility right-of-ways, commercial and industrial landscaped areas, soil wash-off |
| Organic materials/oxygen demanding substances | Residential laws and gardens, commercial landscaping, animal waste |
| Metals | Automobiles, bridges, atmospheric deposition, industrial areas, soil erosion, metal surfaces, combustion processes |
| Oil and grease, organics associated with petroleum | Roads, driveways, parking lots, vehicle maintenance areas, gas stations, illicit dumping to storm drains, automobile emissions, and fats, oils, and grease from restaurants |
| Bacteria and viruses | Lawns, roads, leaking sanitary sewer lines, sanitary sewer cross-connections, animal waste (domestic and wild), septic systems, homeless encampments, sediments/biofilms in storm drain system |
| Nutrients | Landscape fertilizers, atmospheric deposition, automobile exhaust, soil erosion, animal waste, detergents |

*Source: Adapted from USEPA, 1999 (Preliminary Data Summary of Urban Storm Water BMPs)*

FMFCD's Post-Development Standards Technical Manual provides guidance for implementing stormwater quality Best Management Practices (BMPs) for drainage areas subject to the Policy, with the intention of improving water quality and mitigating potential water quality impacts from stormwater and non-stormwater discharges. The Post-Development Standards Technical Manual addresses the following objectives and goals:

- Minimize impervious surfaces and directly connect impervious surfaces in areas of new development and redevelopment, and where feasible, to maximize on-site infiltration of stormwater runoff;
- Implement pollution prevention methods supplemented by pollutant source controls and treatment, and where practical, use strategies that control the sources of pollutants or constituents (i.e., where water initially meets the ground) to minimize the transport of runoff and pollutants offsite and into MS4s;
- Preserve, and where possible create or restore, areas that provide important water quality benefits, such as riparian corridors, wetlands, or buffer zones
- Limit disturbances of natural water bodies and natural drainage systems by development, including roads, highways, and bridges;
- Identify and avoid development in areas that are particularly susceptible to erosion and sediment loss or establish guidance that protects areas from erosion and sediment loss;
- Implement source and structural controls as necessary and appropriate to protect downstream receiving water quality from increased pollutant loadings and flows (hydromodification concepts) from new development and significant redevelopment;

- Control the post-development peak stormwater runoff discharge rates and velocities to maintain or reduce pre-development downstream erosion and to protect downstream habitat; and
- Consider integration of Low Impact Development (LID) principles into project design.

The Post-Development Standards Technical Manual describes the stormwater management requirements for Priority Projects, which are identified as meeting one or more of the following and discharge to the San Joaquin River or do not have basin service:

- Home subdivisions of 10 housing units or more;
- Commercial developments greater than 100,000 square feet;
- Automotive repair shops;
- Restaurants;
- Parking lots 5,000 square feet or greater with 25 or more parking spaces and potentially exposed to urban runoff;
- Streets and roads;
- Retail gasoline outlets (RGOs); and
- Significant redevelopment projects, which are developments that result in creation or addition of at least 5,000 square feet of impervious surface on an already developed site. Significant redevelopment includes, but is not limited to, expansion of a building footprint or addition or replacement of a structure, structural developing including an increase in gross floor area and/or exterior construction or remodeling, replacement of impervious surface that is not part of a routine maintenance activity, and land disturbing activities related with structural or impervious surfaces. Where significant redevelopment results in an increase of less than 50 percent of the impervious surfaces of a previously existing development and the existing development was not subject to Post-Construction Standards, only the proposed alteration must meet the requirements of the Post-Development Standards Technical Manual.

All Priority Projects must mitigate the Stormwater Quality Design Volume (SWQDV) or Stormwater Quality Design Flow (SWQDF) through LID- or treatment-based stormwater quality BMPs or a combination thereof.

For new development or significant redevelopment projects for restaurants with less than 5,000 square feet, the project applicant must meet all the requirements of the Post-Development Standards Technical Manual except for mitigating the SWQDV or SWQDF and implementing stormwater quality BMPs.

The Post-Development Standards Technical Manual can be found on FMFCD's website here:

http://www.fresnofloodcontrol.org/wp-content/uploads/2014/11/Post-Development-Standards-Technical-Manual.pdf

**c. Potential for discharge of stormwater from areas from material storage, vehicle or equipment maintenance (including washing), waste handling, hazardous materials handling or storage, delivery areas or loading docks, or other outdoor work areas.**

Development projects may create potential impacts to stormwater from non-stormwater discharge from areas with material storage, vehicle or equipment fueling, vehicle or equipment maintenance (including washing), waste handling, hazardous materials handling or storage, delivery areas or loading docks, or other outdoor work area.

Some materials, such as those containing heavy metals or toxic compounds, are of more concern than other materials. Toxic and hazardous materials must be prevented from coming in contact with stormwater runoff. Non-toxic or non-hazardous materials, such as debris and sediment, can also have significant impacts on receiving waters. Contact between non-toxic or non-hazardous materials and stormwater runoff should be limited, and such materials prevented from being discharged with stormwater runoff. To help mitigate these potential impacts, BMPs should be included to prevent discharges from leaving the property.

Refer to FMFCD Post-Development Standards Technical Manual for more information or go to http://water.epa.gov/polwaste/nps/urban.cfm.

**d. Potential for discharge of stormwater to impact the beneficial uses of the receiving waters or areas that provide water quality benefits.**

Identify receiving waters and describe activities that may impact the beneficial uses of the receiving waters or that project water quality benefits. Project that can impact beneficial uses or receiving waters may be mitigated by implementation of the FMFCD Post-Development Standards Technical Manual.

**e. Potential for the discharge of stormwater to cause significant harm on the biological integrity of the water ways and water bodies.**

Conservation of natural areas, soils, and vegetation helps to retain numerous functions of pre-development hydrology, including rainfall interception, infiltration, and evapotranspiration. Each project site possesses unique topographic, hydrologic, and vegetative features, some of which are more suitable for development than others. Sensitive areas, such as streams and their buffers, floodplains, wetlands, steep slopes, and highly-permeable soils, should be protected and/or restored. Slopes can be a major source of sediment and should be properly protected and stabilized. Locating development in less sensitive areas of a project site and conserving naturally vegetated areas can minimize environmental impacts from stormwater runoff.

The evaluation of a project's effect on sensitive natural communities should encompass aquatic and wetland habitats. Consider "aquatic and wetland habitat" as examples of sensitive habitat.

Comment Letter B2 *cont.*

**f. Potential for significant changes in the flow velocity or volume of stormwater runoff that can cause environmental harm.**

The evaluation of a project's effect on drainage patterns should refer to the FMFCD's Storm Drainage and Flood Control Master Plan and have their project reviewed by FMFCD to assess the significance of altering existing drainage patterns and to develop any mitigation measures in addition to our stormwater mitigation system. The evaluation should also consider any potential for streambed or bank erosion downstream from the project.

**g. Potential for significant increases in erosion of the project site or surrounding areas.**

The evaluation of a project's effect on drainage patterns should refer to the FMFCD's Storm Drainage and Flood Control Master Plan and have their project reviewed by FMFCD to assess the significance of altering existing drainage patterns and to develop any mitigation measures in addition to our stormwater mitigation system. The evaluation should also consider any potential for streambed or bank erosion downstream from the project.

Comment Letter B3

San Joaquin Valley AIR POLLUTION CONTROL DISTRICT

HEALTHY AIR LIVING™

May 05, 2020

Sophia Pagoulatos
City of Fresno
Planning and Development Department
2600 Fresno Street, Room 3065
Fresno, CA 93721

**Project: Program Environmental Impact Report for the City of Fresno General Plan**

**District CEQA Reference No:** 20200209

Dear Ms. Pagoulatos,

The San Joaquin Valley Unified Air Pollution Control District (District) has reviewed the Draft Program Environmental Impact Report (PEIR) for the City of Fresno General Plan (Project) referenced above. The Project is to update the approved 2014 General Plan in order to reflect changes in applicable statutes and regulations related to Vehicle Miles Traveled (VMT), to include a current baseline for the continued implementation of the approved General Plan, and to reflect changes in City Planning documents that have occurred since adoption of the approved General Plan in 2014. The City of Fresno (City) is not proposing any land use changes as a part of this Project, but it does include an update to the City's Greenhouse Gas Reduction Plan. **B3-1**

The District appreciates the opportunity to review the PEIR and offers the following comments:

1. **Ongoing Commitment to Strengthen Working Relationship**

   The District appreciates the City's ongoing commitment to strengthen the working relationship with the District, and commits to supporting the City in identifying and mitigating impacts on air quality through the CEQA review process. **B3-2**

   Consistent with this cooperative effort and in order to address air quality impacts and concerns prior to future development projects occurring, the District recommends that the City develop administrative mechanisms and policies that ensure

**Samir Sheikh**
Executive Director/Air Pollution Control Officer

**Northern Region**
4800 Enterprise Way
Modesto, CA 95356-8718
Tel: (209) 557-6400 FAX: (209) 557-6475

**Central Region (Main Office)**
1990 E. Gettysburg Avenue
Fresno, CA 93726-0244
Tel: (559) 230-6000 FAX: (559) 230-6061

**Southern Region**
34946 Flyover Court
Bakersfield, CA 93308-9725
Tel: (661) 392-5500 FAX: (661) 392-5585

www.valleyair.org www.healthyairliving.com

Printed on recycled paper.

consistency in providing the District with information about projects under consideration by the City, such as land use designation, project size, and proximity to sensitive receptors and existing emission sources. To aid the City in determining a project's potential impacts, the District recommends the City provide an assessment evaluating potential project construction and operation related to air quality impacts to the District as early as possible. Additionally, the District is available to work with the City and project applicants on future development projects to address air quality impacts and concerns. The District encourages the City to include in the General Plan a section that advises project applicants to reach out and work with the District. The District's goal is to assist with enhancing project designs in the early stages of the planning process for a better overall project with minimized impact on air quality and early identification of feasible mitigation measures. **B3-2 cont.**

**2. Project Siting**

The General Plan is the blueprint for future growth and provides guidance for the community's development. The Project itself will not have an impact on air quality. However, without appropriate mitigation, future development projects within the City may contribute to negative impacts on air quality due to increased traffic and ongoing operational emissions. The General Plan sets the planning guidelines for where future developments can be sited and includes the City's comprehensive community goals, policies, and objectives. Appropriate project siting helps ensure there is adequate distance between conflicting land uses, to prevent or reduce both localized and cumulative air pollution impacts from commercial and industrial land uses that are in close proximity to schools or residential areas. Possible planning resources that may be included in the General Plan that are available to the City and future developers include:

- California Air Board Resources' (CARB) *Air Quality and Land Use Handbook: A Community Health Perspective*. The document includes tables with recommended buffer distances associated with various types of common sources (e.g. distribution centers, chrome platers, gasoline dispensing facilities, and etc.). Document can be found at: https://ww3.arb.ca.gov/ch/handbook.pdf **B3-3**

- *CARB Freight Handbook*. This document will compile the best practices designed to address air pollution impacts as "practices" which may apply to the siting, design, construction, and operation of freight facilities to minimize health impacts on nearby communities. CARB and the District are committed to work cooperatively to advance implementation of the best practices discussed in Tables 5 and 6 of the Freight Handbook Concept Paper. CARB Freight Handbook documents can be found at:

    - CARB Freight Handbook: https://ww2.arb.ca.gov/our-work/programs/freight-handbook

- Freight Handbook Concept Paper: https://ww2.arb.ca.gov/sites/default/files/2020-03/2019.12.12%20-%20Concept%20Paper%20for%20the%20Freight%20Handbook_1.pdf

**B3-3 cont.**

**3. Reducing Vehicle Miles Traveled**

The District is currently designated as extreme non-attainment of the federal national ambient air quality standard for ozone and non-attainment for PM2.5. Mobile source emissions resulting from growth and development could have significant impacts on air quality. To reduce the project related impacts on air quality, the General Plan should include language supported by policy establishing standards designed to reduce vehicle miles traveled (VMT). The General Plan VMT can be reduced through encouragement of mixed-use development, walkable communities, and other project design elements.

To aid agencies in addressing VMT impacts the District has prepared the following guidance documents: *Air Quality Guidelines for General Plans*, and *AB 170 Requirements for General Plans*. These documents provide general information and recommendations for policies that are effective in reducing impacts from growth and development projects. The District appreciates the City for its effort in integrating recommendations identified in the *Air Quality Guidelines for General Plans* document into the proposed General Plan. These documents are available on the District's website at: http://www.valleyair.org/transportation/Guidelines_for_General_Plans.htm.

Additionally, recommended design elements can be found on the District's website at: http://www.valleyair.org/transportation/Mitigation-Measures.pdf.

**B3-4**

**4. Comments on "Health Effects Summary" Discussion in General Plan (Section 4.3.7.1)**

Under the "Health Effects Summary", the District recommends that General Plan account for the Court's holding in *Sierra Club v. County of Fresno* (2018) 6 Cal.5th 502 (Friant Ranch), where the California Supreme Court held that an EIR's general discussion of adverse health impacts for exposure to ozone and PM is inadequate where it only provides a "general description of symptoms that are associated with exposure to ozone and the discussion of health impacts regarding each type of pollutant is at most a few sentences of general information," and where the "disclosures of health effects fail to indicate the concentrations of which such pollutants would trigger the identified symptoms." The court explained that CEQA requires that an EIR make "a reasonable effort to discuss relevant specifics regarding the connection between the general health effects associated with a particular pollutant and the estimated amount of that pollutant the project will likely produce." If it is not scientifically possible to do more to connect adverse air quality impacts from a project with potential human health impacts, the EIR itself must

**B3-5**

explain "why, in a manner reasonably calculated to inform the public of the scope of what is and is not yet known about the Project's impacts." EIR's are inadequate if they fail to provide information on the "nature and magnitude" of the health and safety problems caused by the physical changes resulting from the Project aside from a generalized "better/worse dichotomy." Instead, an "EIR must provide an adequate analysis to inform the public how its bare numbers translate to create potential adverse impacts or it must adequately explain what the agency does know and why, given existing scientific constraints, it cannot translate potential health impacts further." The District recommends that the General Plan include a discussion of how the Plan, particularly future projects developed under the Plan, will endeavor to conform to the Court's holding. **B3-5 cont.**

**5. Assembly Bill 617**

Assembly Bill (AB) 617 (2017, Garcia) requires the California Air Resources Board (CARB) and air districts to develop and implement Community Emission Reduction Programs (CERPs) in an effort to reduce air pollution exposure in impacted disadvantaged communities. The South Central Fresno area is one of the first Valley communities selected by CARB for investment of additional air quality resources and attention under AB 617.

Developed through an extensive community engagement process and Community Steering Committee, the CERP for the South Central Fresno Community was adopted by the District Governing Board in September 2019 and by the CARB Board in February 2020. The CERP identifies a wide range of measures designed to reduce air pollution and exposure, including a number of strategies to be implemented in partnership between agencies and local organizations. One of the measures identified and prioritized in the CERP includes working collaboratively with the City of Fresno to enhance community participation in land use processes, including working together to ensure more comprehensive opportunities for public input on land use decisions, and better communicating and understanding air quality impacts and potential mitigation. **B3-6**

Recognizing that a large portion of the City consists of the South Central Fresno AB 617 community, the District encourages the City to further assess the emission reductions measures and strategies contained in the CERP, and address them in the Fresno General Plan, as appropriate.

For more details about the South Central Fresno CERP, please visit the District website at: http://community.valleyair.org/media/1516/01finalscfresnocerp-9-19-19.pdf.

## 6. Recommendations for Future Development Projects

The following recommendations should be considered for inclusion in the PEIR to address impacts resulting from future development projects on air quality:

### A. Construction Related Emissions

Mitigation Measure (MM) Air-2.1 in the Draft PEIR states,

> "*Prior to future discretionary project approval, development project applicants shall prepare and submit to the Director of the City Planning and Development Department, or designee, a technical assessment evaluating potential project construction phase-related air quality impacts. The evaluation shall be prepared in conformance with SJVAPCD methodology for assessing construction impacts. If construction related air pollutants are determined to have the potential to exceed the SJVAPCD adopted threshold of significance, the Planning and Development Department shall require that applicants for new development projects incorporate mitigation measures into construction plans to reduce air pollutant emissions during construction activities*."

Per the Draft PEIR, if construction emissions for specific future development projects would result in a significant impact on air quality, the new development project will be required to incorporate mitigation measures, such as the use of diesel oxidation catalysts and/or catalyzed diesel particulate traps on diesel equipment, into their construction plans. **B3-7**

To reduce impacts from construction-related exhaust emissions and activities, the District recommends the proposed mitigation measure Air-2.1 be modified to include the following additional potential mitigation measures:

- Requiring all future development projects with construction-related exhaust emissions and activities resulting in significant impacts on air quality to utilize the cleanest reasonably available off-road construction fleets and practices (i.e. eliminating unnecessary idling), and

- Advising all future development projects with construction-related exhaust emissions and activities resulting in a less than significant impact on air quality to utilize the cleanest reasonably available off-road construction fleets and practices (i.e. eliminating unnecessary idling).

B. **Operational Related Emissions – Heavy Duty Trucks and Other Heavy Duty Equipment**

Mitigation Measure (MM) Air-2.2 in the Draft PEIR states:

> *"Prior to future discretionary project approval, development project applicants shall prepare and submit to the Director of the City Planning and Development Department, or designee, a technical assessment evaluating potential project operation-related air quality impacts. The evaluation shall be prepared in conformance with SJVAPCD methodology in assessing air quality impacts. If operation-related air pollutants are determined to have the potential to exceed the SJVAPCD-adopted thresholds of significance, the Planning and Development Department shall require that applicants for new development projects incorporate mitigation measures to reduce air pollutant emissions during operational activities."*

Per the Draft PEIR, new development projects that result in significant impact on air quality for operational emissions are required to incorporate clean air project design elements aimed at reducing project impact on air quality to less than significant when feasible.

The San Joaquin Valley will not be able to attain stringent health-based federal air quality standards without significant reductions in emissions from Heavy Heavy Duty (HHD) Trucks, the single largest source of NOx emissions in the San Joaquin Valley. The District recently adopted the *2018 PM2.5 Plan* for meeting federal PM2.5 standards in the San Joaquin Valley, and which relies on significant new emissions reductions from HHD Trucks. These reductions include those achieved through the implementation of the California Air Resources Board (CARB) Statewide Truck and Bus Regulation, which requires truck fleets operating in California to meet the 2010 0.2 g/bhp-hr NOx standard by 2023. Additionally, to meet the federal air quality standards by the 2020 to 2024 attainment deadlines, the Plan relies on a significant and immediate transition of heavy duty truck fleets to zero or near-zero emissions technologies, including the near-zero truck standard of 0.02 g/bhp-hr NOx established by the California Air Resources Board. **B3-8**

To reduce impacts from future development projects with related operational emissions and activities that result in significant impacts on air quality, the District recommends the proposed mitigation measure Air-2.2 be modified to include language:

- Requiring operational fleets to utilize the cleanest available HHD truck technologies, including zero and near-zero (0.02 g/bhp-hr NOx) technologies as feasible,

- Requiring all on-site service equipment (cargo handling, yard hostlers, forklifts, pallet jacks, etc.) from development projects (such as distribution centers, warehouse, etc.) to utilize zero-emissions technologies as feasible, and

- Requiring fleets associated with future development projects to implement best practices (i.e. eliminating unnecessary idling).

For future development projects with operational emissions and activities that result in a less than significant impact on air quality, the District recommends the proposed mitigation measure Air-2.2 be modified to include language:

- Advising operational fleets to utilize the cleanest available HHD truck technologies, including zero and near-zero (0.02 g/bhp-hr NOx) technologies as feasible,

- Advising all on-site service equipment (cargo handling, yard hostlers, forklifts, pallet jacks, etc.) from development projects (such as distribution centers, warehouse, etc.) to utilize zero-emissions technologies as feasible, and

- Advising fleets associated with future development projects to implement best practices (i.e. eliminating unnecessary idling).

**B3-8 cont.**

C. **Operational Related Emissions - Truck Routing**

Truck routing involves the path/roads heavy-duty trucks take to and from their destination. The air emissions from heavy-duty trucks can impact residential communities and sensitive receptors.

The District recommends the General Plan include guidance supported by policy requiring future development projects to evaluate heavy-duty truck routing patterns to help limit emission exposure to residential communities and sensitive receptors. More specifically, this measure would require study of current truck routes, in consideration of the number and type of each vehicle, destination/origin of each vehicular trip, time of day/week analysis, vehicle miles traveled and emissions. The truck routing study would also identify alternative truck routes and their impacts on VMT, GHG emissions, and air quality.

Additionally, as related information, the City has committed to working with the District to commission a heavy duty truck rerouting study for the community in the adopted CERP for South Central Fresno. The District recommends that this study be discussed in the General Plan as appropriate, and look forward to working with the City to move forward with this project, including identifying co-funding opportunities to ensure maximum leveraging of funding.

**B3-9**

D. **Operational Related Emissions – Under-fired Charbroilers**

Future development projects for restaurants with under-fired charbroilers may pose the potential for immediate health risk, particularly when located in densely developed locations near sensitive receptors. Since the cooking of meat can release carcinogenic PM2.5 species like polycyclic aromatic hydrocarbons, controlling emissions from new under-fired charbroilers will have a substantial positive impact on public health.

Charbroiling emissions often occur in populated areas, near schools and residential neighborhoods, resulting in high exposure levels for sensitive Valley residents. The air quality impacts on neighborhoods near restaurants with under-fired charbroilers can be significant on days when meteorological conditions are stable, when dispersion is limited and emissions are trapped near the surface within the surrounding neighborhoods. This potential for neighborhood-level concentration of emissions during evening or multi-day stagnation events raises environmental concerns. **B3-10**

Furthermore, reducing commercial charbroiling emissions is essential to achieving attainment of multiple federal PM2.5 standards and associated health benefits in the Valley. Therefore, the District recommends that the General Plan include a measure requiring the assessment and potential installation, as technologically feasible, of particulate matter emission control systems for new large restaurants operating under-fired charbroilers. The District is available to assist the City and project proponents with this assessment. Additionally, to ease the financial burden for Valley businesses, the District is currently offering substantial incentive funding that covers the full cost of purchasing, installing, and maintaining the system for up to two years. Please contact the District at (559) 230-5800 or technology@valleyair.org for more information.

E. **Voluntary Emission Reduction Agreement**

Per the Draft PEIR, the City recognizes that a Voluntary Emission Reduction Agreement (VERA) is a method available for projects to mitigate significant criteria pollutant impacts. The District supports the City's acknowledgment that a VERA should be considered for projects with significant air impacts.

A VERA is a mitigation measure by which the project applicant provides pound-for-pound mitigation of emissions increases through a process that develops, funds, and implements emission reduction projects, with the District serving a role of administrator of the emissions reduction projects and verifier of the successful mitigation effort. To implement a VERA, the project applicant and the District enter into a contractual agreement in which the project applicant agrees to mitigate Project specific emissions by providing funds for the District's incentives programs. The funds are disbursed by the District in the form of **B3-11**

grants for projects that achieve emission reductions. Thus, project-specific regional impacts on air quality can be fully mitigated. Types of emission reduction projects that have been funded in the past include replacement of old heavy-duty trucks with new, cleaner, heavy-duty trucks, electrification of stationary internal combustion engines (such as agricultural irrigation pumps), and replacement of older school buses.

In implementing a VERA, the District verifies the actual emission reductions that have been achieved as a result of completed grant contracts, monitors the emission reduction projects, and ensures the enforceability of achieved reductions. After the project is mitigated, the District certifies to the Lead Agency that the mitigation is completed, providing the Lead Agency with an enforceable mitigation measure demonstrating that project-specific regional emissions have been mitigated to less than significant. To assist the Lead Agency and project applicant in ensuring that the environmental document is compliant with CEQA, the District recommends the Draft PEIR includes an assessment of the feasibility of implementing a VERA. **B3-11 cont.**

Additional information on implementing a VERA can be obtained by contacting District CEQA staff at by email at CEQA@valleyair.org or by phone at (559) 230-6000.

F. **Allowed Uses Not Requiring Project-Specific Discretionary Approval**

In some cases, for future development projects, the City may determine that a proposed project be approved as an allowed use not requiring a project-specific discretionary approval from the City. The District recommends the General Plan include language supported by policy requiring such projects to prepare a technical assessment in consultation with the District, and recommending that a VERA be considered for development projects determined to have a significant impact on air quality. For example, this requirement would apply to large development projects (i.e. large residential project, large distribution center, large warehouse, etc.) that would have the potential to significantly impact air quality and is determined by the City to be allowed by use, not requiring a project specific discretionary approval from the City. **B3-12**

Furthermore, to strengthen City policies for allowed uses, the District recommends that only future development projects resulting in a less than significant impact for all District CEQA applicable thresholds be eligible for an allowed use approval. Projects exceeding any District CEQA significance thresholds should be required to receive a discretionary approval from the City.

G. **Health Risk Screening/Assessment**

A Health Risk Screening/Assessment identifies potential Toxic Air Contaminants (TAC's) impact on surrounding sensitive receptors such as hospitals, daycare **B3-13**

centers, schools, work-sites, and residences. TAC's are air pollutants identified by the Office of Environmental Health Hazard Assessment/California Air Resources Board (OEHHA/CARB) (https://www.arb.ca.gov/toxics/healthval/healthval.htm) that pose a present or potential hazard to human health. A common source of TACs can be attributed to diesel exhaust emitted from both mobile and stationary sources.

The District recommends the future development projects be evaluated for potential health impacts to surrounding receptors (on-site and off-site) resulting from operational and multi-year construction TAC emissions.

i) The District recommends conducting a screening analysis that includes all sources of emissions. A screening analysis is used to identify projects which may have a significant health impact. A prioritization, using the latest approved California Air Pollution Control Officer's Association (CAPCOA) methodology, is the recommended screening method. A prioritization score of 10 or greater is considered to be significant and a refined Health Risk Assessment (HRA) should be performed.

   For your convenience, the District's prioritization calculator can be found at: http:www.valleyair.org/busind/pto/emission_factors/Criteria/Toxics/Utilities/PRIORITIZATION%20RMR%202016.XLS. **B3-13 cont.**

ii) The District recommends a refined HRA for future development projects that result in a prioritization score of 10 or greater. Prior to performing an HRA, it is recommended that the future development project applicants contact the District to review the proposed modeling protocol. A future development project would be considered to have a significant health risk if the HRA demonstrates that the project related health impacts would exceed the Districts significance threshold of 20 in a million for carcinogenic risk and 1.0 for the Acute and Chronic Hazard Indices, and would trigger all feasible mitigation measures. The District recommends that future development projects that result in a significant health risk not be approved.

For HRA submittals, please provide the following information electronically to the District for review:

- HRA AERMOD model files
- HARP2 files
- Summary of emissions source locations, emissions rates, and emission factor calculations and methodology.

More information on toxic emission factors, prioritizations and HRAs can be obtained by:

- E-Mailing inquiries to: hramodeler@valleyair.org; or
- Contacting the District by phone for assistance at (559) 230-6000; or
- Visiting the Districts website (Modeling Guidance) at: http://www.valleyair.org/busind/pto/Tox_Resources/AirQualityMonitoring.htm.

**B3-13 cont.**

H. **Ambient Air Quality Analysis**

An ambient air quality analysis (AAQA) uses air dispersion modeling to determine if emissions increases from a project will cause or contribute to a violation of the ambient air quality standards. The District recommends that an AAQA be performed for the project if emissions exceed 100 pounds per day of any pollutant.

If an AAQA is performed, the analysis should include emissions from both project specific permitted and non-permitted equipment and activities. The District recommends consultation with District staff to determine the appropriate model and input data to use in the analysis.

Specific information for assessing significance, including screening tools and modeling guidance is available online at the District's website www.valleyair.org/ceqa.

**B3-14**

I. **Nuisance Odors**

Future development projects should be evaluated to determine the likelihood that the project would result in nuisance odors. Nuisance odors may be assessed qualitatively taking into consideration project design elements and proximity to off-site receptors that potentially would be exposed to objectionable odors. The intensity of an odor source's operations and its proximity to sensitive receptors influences the potential significance of odor emissions. Any project with the potential to frequently expose members of the public to objectionable odors should be deemed to have a significant impact and should be required to implement all feasible mitigation measures.

**B3-15**

J. **District Rule 9510 (Indirect Source Review)**

The purpose of District Rule 9510 is to reduce the growth in both NOx and PM10 emissions associated with development and transportation projects from mobile and area sources associated with construction and operation of development projects. The rule encourages clean air design elements to be incorporated into development projects. In case the proposed development project clean air design elements are insufficient to meet the targeted emission reductions, the rule requires developers to pay a fee used to fund projects to achieve off-site emissions reductions.

**B3-16**

Accordingly, future development project(s) within the Project would be subject to District Rule 9510 if:

(1) Upon full build-out, the project would receive a project-level discretionary approval from a public agency and would equal or exceed any one of the following applicability thresholds:

- 50 dwelling units
- 2,000 square feet of commercial space;
- 25,000 square feet of light industrial space;
- 100,000 square feet of heavy industrial space;
- 20,000 square feet of medical office space;
- 39,000 square feet of general office space; or
- 9,000 square feet of educational space; or
- 10,000 square feet of government space; or
- 20,000 square feet of recreational space; or
- 9,000 square feet of space not identified above

(2) Or would equal or exceed any of the applicability thresholds in section 2.2 of the rule.

**B3-16 cont.**

District Rule 9510 also applies to any transportation or transit development projects where construction exhaust emissions equal or exceed two (2.0) tons of NOx or two (2.0) tons of PM10.

In the case the future development project(s) are subject to District Rule 9510, an Air Impact Assessment (AIA) application is required and the District recommends that demonstration of compliance with District Rule 9510, before issuance of the first building permit, be made a condition of Project approval.

Information about how to comply with District Rule 9510 can be found online at: http://www.valleyair.org/ISR/ISRHome.htm.

The AIA application form can be found online at: http://www.valleyair.org/ISR/ISRFormsAndApplications.htm.

District staff is available to provide assistance with determining if future development projects will be subject to Rule 9510, and can be reached by phone at (559) 230-6000 or by email at ISR@valleyair.org.

K. **District Rule 9410 (Employer Based Trip Reduction)**

**B3-17**

Future development projects may be subject to District Rule 9410 (Employer Based Trip Reduction) if the Project would result in employment of 100 or more "eligible" employees. District Rule 9410 requires employers with 100 or more

"eligible" employees at a worksite to establish an Employer Trip Reduction Implementation Plan (eTRIP) that encourages employees to reduce single-occupancy vehicle trips, thus reducing pollutant emissions associated with work commutes. Under an eTRIP plan, employers have the flexibility to select the options that work best for their worksites and their employees.

Information about how District Rule 9410 can be found online at: http://www.valleyair.org/Programs/Rule9410TripReduction/eTRIP_main.htm.

For additional information, you can contact the District by phone at 559-230-6000 or by e-mail at etrip@valleyair.org.

**B3-17 cont.**

L. **Air Quality Permitting: District Rules 2010 and 2201**

Future development projects may be subject to District Rule 2010 (Permits Required) and Rule 2201 (New and Modified Stationary Source Review) and will require District permits. In general, facilities with equipment that may emit air pollution or is used for controlling air pollution are subject to permit requirements. Prior to construction, the future development project proponent should submit to the District an application for an Authority to Construct (ATC).

For further information or assistance, the project proponent can visit https://www.valleyair.org/busind/pto/ptoprocess.htm#who or contact the District's Small Business Assistance (SBA) Office at (559) 230-5888.

**B3-18**

M. **Other District Rules and Regulations**

Future development projects may also be subject to the following District rules: Regulation VIII, (Fugitive PM10 Prohibitions), Rule 4102 (Nuisance), Rule 4601 (Architectural Coatings), and Rule 4641 (Cutback, Slow Cure, and Emulsified Asphalt, Paving and Maintenance Operations). In the event an existing building will be renovated, partially demolished or removed, the project may be subject to District Rule 4002 (National Emission Standards for Hazardous Air Pollutants).

The above list of rules is neither exhaustive nor exclusive. To identify other District rules or regulations that apply to future project or to obtain information about District permit requirements, project applicants are strongly encouraged to contact the District's Small Business Assistance Office at (559) 230-5888.

Current District rules can be found online at: www.valleyair.org/rules/1ruleslist.htm.

**B3-19**

Comment Letter B3 *cont.*



If you have any questions or require further information, please contact Michael Corder by e-mail at Michael.Corder@valleyair.org or by phone at (559) 230-5818. **B3-20**

Sincerely,

Arnaud Marjollet
Director of Permit Services

AM: mc

Comment Letter B4

2907 S. MAPLE AVENUE
FRESNO, CALIFORNIA 93725-2208
TELEPHONE: (559) 233-7161
FAX: (559) 233-8227

A Century of Commitment, Conveyance & Customer Service

May 5, 2020

Sophia Pagoulatos, Planning Manager
City of Fresno
2600 Fresno Street, Room 3065
Fresno, CA 93721

RE: City of Fresno's General Plan Draft Program Environmental Impact Report (PEIR)
FID Facilities: Various

Dear Ms. Pagoulatos:

The Fresno Irrigation District (FID) has reviewed the Draft Program Environmental Impact Report (PEIR) for the City of Fresno. The project location is the Planning Area of the City of Fresno. To be in conformance with State law and consistent with recent legislative changes, the City is updating the 2014 adopted Fresno General Plan and certified Master Environmental Impact Report (MEIR). This update is to provide consistency with Section 15168 of the CEQA Guidelines. We appreciate the opportunity to review and comment on the subject documents for the proposed Plan. The proposed Plan is a significant development and requires thorough and careful consideration of all the potential impacts. Our comments are as follows: **B4-1**

1. FID previously reviewed and commented on the subject project on May 29, 2019 as Notice of Preparation of a Program Environmental Impact Report, an Update to the Master Environmental Impact Report for the City of Fresno General Plan. A copy of FID's previous comments have been attached for your reference. The comments and conditions still apply. It also appears that there may still be a water deficit within the project area by 2040. These impacts must be mitigated or considered as part of the your determination. **B4-2**

BOARD OF DIRECTORS President RYAN JACOBSEN, Vice-President JERRY PRIETO, JR.
CHRISTOPHER WOOLF, GEORGE PORTER, GREGORY BEBERIAN, General Manager BILL STRETCH

Comment Letter B4 *cont.*



Thank you for making available to us the City of Fresno's Draft Plan Environmental Impact Report for our review and allowing us the opportunity to provide comments. We appreciate the opportunity to review and comment on the subject documents for this project. While it is difficult to envision all of the potential impacts without all of the improvement details, we attempted to provide you as much information as possible. We reserve the right to provide additional comments when more detailed information becomes available. If you have any questions, please feel free to contact me at (559) 233-7161 extension 7103 or LKimura@fresnoirrigation.com. **B4-3**

Sincerely,

Laurence Kimura, P.E.
Chief Engineer

Attachments

Comment Letter B4 *cont.*

OFFICE OF
FRESNO IRRIGATION DISTRICT
YOUR MOST VALUABLE RESOURCE - WATER

TELEPHONE (559) 233-7161
FAX (559) 233-8227
2907 S. MAPLE AVENUE
FRESNO, CALIFORNIA 93725-2208

May 29, 2019

Sophia Pagoulatos, Planning Manager
Development and Resource Management Department
City of Fresno
2600 Fresno Street, Room 3065
Fresno, CA 93721

RE: Notice of Preparation of a Program Environmental Impact Report, an Update to the Master Environmental Impact Report for the City of Fresno General Plan
FID Facilities: Various

Dear Ms. Pagoulatos:

The Fresno Irrigation District (FID) has reviewed the Notice of Preparation of a Program Environmental Impact Report, an Update to the Master Environmental Impact Report for the City of Fresno General Plan (Project). We appreciate the opportunity to review and comment on the subject documents for the proposed project. FID's comments are as follows:

1. FID previously reviewed and commented on the City of Fresno Draft Master Environmental Impact Report on October 15, 2014 as Draft Master Environmental Impact Report for the Draft General Plan for the City of Fresno and Related Items. Many of the comments and conditions still apply and should be considered in the current effort. A copy has been attached for your reference. Any deviations or impacts resulting from the previously approved General Plan should be disclosed and discussed.

FID has the following additional comments:

**Water Supply Impact**

1. The project encompasses the City of Fresno Growth Area 1 and 2 and portions of the project are not entitled to water under the current City of Fresno Conveyance Agreement. Growth Area 2 is a new issue under the recently executed agreement between the City of Fresno and FID. The document must consider how to best handle future developments, if any, within the areas designated Growth Area 2 and areas outside of the agreement to evaluate all potential impacts.

Comment Letter B4 *cont.*



2. The document must evaluate whether the City's Water Master Plan needs to be updated and how the Cooperative Agreement between the City of Fresno and FID may impact the previous plan. The report must evaluate the City's growth with the recent water issues and whether the City's Water Master Plan can still provide the necessary guidance for the City.

3. The City of Fresno has implemented many of the projects proposed in the City's Water Master Plan. The Proposed document should consider and evaluated whether the constructed projects have resulted in benefits that were anticipated.

4. The proposed land use (or changes in land use) should be such that the need for water is minimized and/or reduced so that groundwater impacts to the proposed project area and any surrounding areas are eliminated.

5. If treated surface water will be used and the City has a deficit water supply or groundwater levels continue to drop, the City must acquire additional water from a water purveyor, such as FID for that purpose, so as to not impact water supplies to or create greater water supply deficits in other areas of the City or in the groundwater basin. Water supply issues must be resolved before any further "hardening" of the water supply demand is allowed to take place.

6. The potential for increase in water consumption by the project will result in additional groundwater overdraft. There is a significant cone of depression beneath the City of Fresno. FID is concerned that the increased water demand due to a change in land use may have a significant impact to the groundwater quantity and/or quality underneath the City of Fresno, FID and the Kings Groundwater Sub-basin. The "demand" side of water consumed needs to be evaluated or scrutinized as much as the "supply" side of the water supply. Many of the areas are historically native, and/or rural residential with minimal to no water use. Under current circumstances the project area is experiencing a modest but continuing groundwater overdraft. Should the proposed project result in a significant increase in dependence on groundwater, this deficit will increase. FID recommends the City of Fresno require proposed projects balance anticipated groundwater use with sufficient recharge of imported surface water in order to preclude increasing the area's existing groundwater overdraft problem.

7. California enacted landmark legislation in 2014 known as the Sustainable Groundwater Management Act (SGMA). The act requires the formation of local groundwater sustainability agencies (GSAs) that must assess conditions in their local water basins and adopt locally-based management plans. FID and the City of Fresno are members of the North Kings Groundwater Sustainability Agency which will manage the groundwater basin within the FID service area. This area is in an over drafted groundwater basin and SGMA will impact all users of

Comment Letter B4 *cont.*



groundwater and those who rely on it. The City of Fresno should consider the impacts of the project on the City's ability to comply with the requirements of SGMA.

Thank you for making available to us the Notice of Preparation of a Program Environmental Impact Report, an Update to the Draft Master Environmental Impact Report for the City of Fresno General Plan for our review and allowing us the opportunity to provide comments. We appreciate the opportunity to review and comment on the subject documents for this project. While it is difficult to envision all of the potential impacts without all of the improvement details, we have attempted to provide you as much information as possible. We reserve the right to provide additional comments when more detailed information becomes available. If you have any questions please feel free to contact me Jeremy Landrith at (559) 233-7161 extension 7407 or jlandrith@fresnoirrigation.com.

Sincerely,

Laurence Kimura, P.E.
Chief Engineer

Attachments

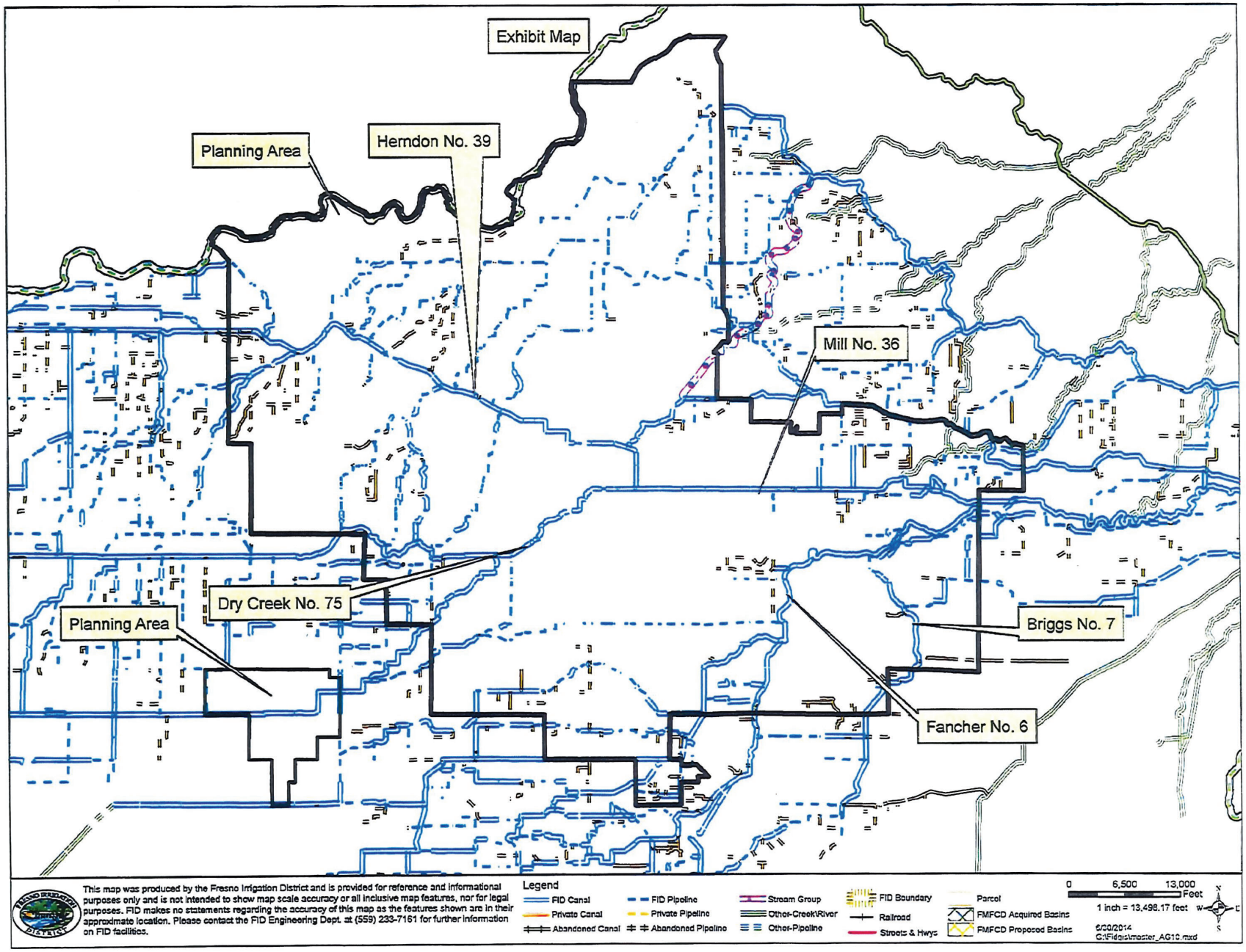


Comment Letter B4 *cont.*

Comment Letter B4 *cont.*

OFFICE OF
FRESNO IRRIGATION DISTRICT
YOUR MOST VALUABLE RESOURCE - WATER

TELEPHONE (559) 233-7161
FAX (559) 233-8227
2907 S. MAPLE AVENUE
FRESNO, CALIFORNIA 93725-2208

October 8, 2014

Jennifer K Clark, Director
Development and Resource Management Department
City of Fresno
2600 Fresno Street, Room 3065
Fresno, CA 93721

RE: Draft Master Environmental Impact Report for the Draft General Plan for the City of Fresno and Related Items
FID Facilities: Various

Dear Ms. Clark:

The Fresno Irrigation District (FID) has reviewed the Draft Master Environmental Impact Report (DMEIR) for the Draft General Plan for the City of Fresno (Project). The Planning Area includes the City of Fresno, its sphere of influence (SOI), and land to the north adjacent to the SOI that serves as a logical boundary along Willow Avenue and east of the San Joaquin River, as well as land to the southwest of the SOI dedicated to the Fresno-Clovis Regional Wastewater Reclamation Facility (RWRF). The Project is an update to the City of Fresno General Plan since the last comprehensive update in 2002. The Fresno General Plan Update is intended to shape development within the Planning Area through 2035 and beyond, and the DMEIR is intended to identify the potential impact for the project. We appreciate the opportunity to review and comment on the subject documents for the proposed project. Your proposed project is a significant development and requires thorough and careful consideration of all of the potential impacts. Our comments are as follows:

**Impacted Facilities**

1. FID has many canals within the Project Area as shown on the attached FID exhibit map. The major facilities include: Briggs No. 7, Fancher No. 6, Mill No. 36, Hernon No. 39, and Dry Creek No. 75. FID's canals range from smaller diameter pipelines to large open canals. In many cases, the existing facilities will need to be relocated to accommodate new urban developments which will require new pipelines and new exclusive easements. FID anticipates it will impose the same conditions on future projects as it would with any other project located within the common boundary of the City of Fresno and FID. FID will require that it review and approve all maps and plans which impact FID canals and easements.

2. FID's facilities that are within the Planning Area carry irrigation water for FID users, recharge water for the City of Fresno, and flood waters during the winter months. In addition to FID's facilities, private facilities also traverse the Planning Area.

BOARD OF DIRECTORS President RYAN JACOBSEN, Vice-President STEVEN BALLS
GEORGE PORTER, GREGORY BEBERIAN, JERRY PRIETO JR. General Manager GARY R. SERRATO

Comment Letter B4 *cont.*



**Water Supply Impact**

3. The northern parts of the Planning Area is located within a portion of the County of Fresno that is outside of the FID service area. See the attached FID water service area maps for reference. FID does not supply surface water to those areas outside of the FID service area for the City's use. The City's Urban Water Management Plan was updated in 2010 and calls for the City to balance its water usage by 2025. It is unknown whether the Urban Water Management Plan will really be able to provide for the water consumption by development projects like the ones proposed within the Planning Area just on groundwater. If not, a balanced water supply will be more difficult to achieve and the potential impacts must be evaluated.

4. The potential for increase in water consumption by the project will result in additional groundwater overdraft. As mentioned in the DMEIR, there is a significant cone of depression beneath the City of Fresno. The Urban Water Management Plan (UWMP) states that the City will have a balanced water supply by 2025, and the goal includes reducing the consumption of gallons per capita per day (gpcd) from 295 to 250. At full buildout, the consumption will be reduced from 250 gpcd to 215 gpcd. It is assumed that the users within the City, including those within FID, will be able and willing to use less water. Will that truly be the case? If not, FID is concerned that the increased water demand due to a change in land use will have a significant impact to the groundwater quantity and/or quality underneath the City of Fresno, FID and the Kings Groundwater Sub-basin.

5. According to the City's Urban Water Management Plan, the City of Fresno is currently in the process of planning projects which will enable increased use of available surface water supplies and recycled water, and eliminate groundwater overdraft. It is projected that total water supplies and demands will be balanced by the year 2025. FID would like to see the City keep progressing with this goal, but FID is concerned that future development will inhibit the City's progress to balancing the water usage, if the necessary offsets for the increased water demands are not provided.

6. For development outside of the areas allocated surface water supplies from FID, the Draft Master Environmental Impact Report should consider whether developers should be responsible to increase the groundwater recharge capabilities in the area and/or purchase of additional water supplies to offset the additional demand. The Hydrology and Water Quality Section (5.9) of the Draft Master Environmental Impact Report mentioned making improvements to recharge basins where surface water could be used to recharge the groundwater table. There are several improvements that could provide the necessary mitigation including constructing a new recharge basin in the nearby area, recycling more water, acquiring additional water supplies, and increasing the capacity of local recharge basins.

7. As mentioned on Page 5.15-42 of the DMEIR, implementation of the General Plan and Development Code Update would not have sufficient water supplies available to serve the full buildout of the project and would result in a significant impact related to water supplies. As noted in Impact USS-4, water supply impact may be significant and unavoidable.

Comment Letter B4 *cont.*



8. As mentioned on Page 5.15-4 of the DMEIR, the City is currently allocated 23.6 percent (92,200 AF/year) of FID's water delivery on normal years, and plans to use up to 32.4 percent of the allocations (126,500 AF/year) at full buildout during normal condition. During dry years, FID's water supply may not be enough to meet the projected demand, the City may want to explore other sources of water during dry years. It should also be noted that the anticipated water allocations are based on the assumption that the existing agreements will remain unchanged.

**Agricultural Land Conversion Impact**

9. The proposed General Plan would convert Farmland to other land use designation. The DMEIR assumes the water rights belonging to the agricultural land within FID boundary will remain intact and that the parcels be converted onto City water rates.

10. Conversion of agricultural land for urban use should be done in a manner to minimize the impacts to agriculture and agricultural resources.

**Trail Impact**

11. According to the City of Fresno General Plan, the City is proposing trail projects that will impact FID's canals. As noted in the general plan, significant issues remain before FID's canal system can be used for trail purposes. For informational purposes, FID's standard requirements for a trail along a canal are as follows:

    a. FID will not allow the trail easement to be in common use with FID owned property or easements.
    b. FID requires all trail improvements be placed outside of FID owned properties and easements.
    c. FID will not allow any portion of a tree canopy to encroach within its properties or easements.
    d. FID's canals will not accept any drainage from the trail or the canal bank.
    e. FID may require some improvements be made to the canal depending on the existing canal condition, the proposed trail and the adjacent development.
    f. FID requires its right-of-way be graded to provide a smooth uniform drive surface and cleared of all encroachments including but not limited to; trees, bushes, brush, pipes, stand pipes, wells, miscellaneous debris, etc.

**Road Improvement Impact**

12. History and Prior Rights – FID was formed in 1920 as a successor to the privately owned Fresno Canal and Irrigation Company. The assets of the company consisted of over 600 miles of canals and distribution works, which were constructed between the years 1860 and 1900, as well as extensive water rights on the Kings River. In most cases, FID canals pre-date all roads, highways, and railroads.

13. There will be many FID canals impacted by future road improvements and the High Speed Rail project. Significant effort will be required to allow for such growth and expansion in a manner that allows FID to maintain and operate its facilities in an efficient and effective manner. In the past, the City has not always been supportive of providing FID the access and means necessary to efficiently maintain and operate the conveyance systems.

Comment Letter B4 *cont.*



14. Small/Medium Canal Crossing Requirements – The majority of the proposed crossings will impact existing pipelines and small open channel canals. Requirements for the pipelines will include:
    a. Pipeline Requirements:
        i. FID will require all open channels and existing pipelines to be replaced with ASTM C-361 Rubber Gasket Reinforced Concrete Pipe (RGRCP). Although many of FID's facilities that lie within the proposed Planning Area are pipelines, the majority of these pipelines do not meet FID's urban specifications which would include road or highway crossings. The majority of the existing pipelines are monolithic cast-in-place concrete pipe (CIPCP), low head/thin wall PVC, and non-reinforced mortar jointed concrete pipeline. These pipelines were designed for a rural environment and will fail if they are not replaced as part of the proposed project.
        ii. FID typically requires a minimum of three feet of cover over pipelines. FID tries to eliminate siphons wherever possible due to sedimentation, plugging, and trash removal issues. Most utilities can be moved above and below FID's pipelines and because FID typically pre-dates everyone else, FID should be placed in its desired location.
        iii. FID is also concerned with its existing pipelines being damaged during development construction. FID anticipates the use of large, heavy equipment during construction that could easily damage FID's older pipelines, especially where there is shallow cover and/or non-reinforced concrete pipe.
    b. The two conditions that the proposed crossings will likely fall under are:
        i. Canal Crossings within a New or Realigned Road or Highway Right-of-Way (ROW) –The Road Maintaining Agency (City, County or State) is responsible for maintaining the canal facilities under the Road ROW and they will most likely require the canal crossing to be upgraded to the requirements mentioned above.
        ii. Canal Realigned outside of the Road ROW – there may be existing conditions or proposed plans to realign a FID canal outside of the Road ROW as part of future road improvements. FID will require that the City obtain an exclusive pipeline easement on FID's behalf. The width will vary between 15 to 40 feet depending on the pipeline diameter and site conditions.

15. Large Canal Crossing Requirements – There are several large canal crossings that will not be able to be contained within a pipeline such as the Fancher, Mill, Hernon, and Dry Creek canals. The design shall protect the canal's integrity for an urban setting. The proposed canal crossing must be designed to convey the water in a safe and efficient manner without altering the existing conditions in a negative manner for FID's operations and maintenance. Additional requirements will include:
    a. Freeboard of Bridge – FID requires a minimum freeboard of 2.0 feet through the canal crossing, where possible. The freeboard is needed to pass floating debris and trash through the structure. All of the large open canals are used to convey stormwater from the Fresno/Clovis metropolitan area along with the water coming from the rural creeks in eastern Fresno County. Trash will include both

Comment Letter B4 *cont.*



large and small items including, but not limited to: shopping carts, couches, refrigerators, tree branches, plastic bags, lawn clippings, leaves, aquatic weeds, and all other trash that one could expect from both urban and rural areas.

b. Bridge/Culvert Type – FID prefers that all bridges to be freestanding, no piers, etc. FID understands that a multiple bay box culvert is more desirable because it is less expensive, however, it may end up being more expensive with additional costs going towards additional improvements mentioned below. Also, there is increased liability to both FID and the City, due to the possibility of trash accumulating at dividing walls causing the water levels to raise upstream and potential breach and flood nearby homes and businesses.

c. Trash/Debris – If a multiple bay culvert or a bridge with pilings design is selected, trash and debris will collect on the piers and culvert walls. Access must be provided to remove the trash in a safe and efficient manner. Additional property or easement may be required if it is determined that more trash will collect due to the canal crossing. Maintenance accessibility for trash removal needs to be evaluated based on channel size, amount of trash collected at location in question and accessibility.

d. Equipment Access – In order to access the maintenance road with our larger equipment, FID requires a larger drive approach. FID's minimum access requirement off major roadways is 50 feet from edge of right-of-way narrowing to 20 feet wide drive banks (See attached "Drive Approach in Urban Areas" Detail No. 62). The 50 foot width is defined as starting from the end portion of the bridge/railing outward (away from the bridge). In certain circumstances, a minimum 35 foot setback, to allow safe and adequate access has been accepted. Every road and canal intersection is different and therefore each access will be different. The major factors affecting the proposed width will be the angle of the road intersecting the Canal, grade of canal bank vs. City road, median vs. no median, etc.

16. Water Routings and Construction Window – The FID construction window will vary from year-to-year based on the length of the irrigation season, flood routings, recharge deliveries, maintenance projects and projects funded by others. FID's typical irrigation season begins on March 1, with FID opening the headgates to fill the canals/pipelines approximately 8 days prior (approximately February 21). An average irrigation season lasts 6 months, therefore the season will typically end on August 31. In very wet years, such as this current year, the irrigation season may go through mid-November.

17. Discharges into FID Canals – FID will not allow any discharges into the canals for numerous reasons, including but not limited to, it is a violation Federal/ State/Local regulations, FID's Rules and Regulations and negative impact it will have during the Operations and Maintenance Seasons. All existing discharges from the proposed project into canals must be re-routed to FMFCD storm drain facilities.

**Miscellaneous Comments**

18. There appears to be typographical errors on Page 5.9-4. The third paragraph states that there was 453,1000 AF of intentional recharge and the sixth paragraph states that the safe yield is approximately 1000,000 AF per year.

Comment Letter B4 *cont.*



19. It should be noted that FMFCD's Storm Drainage Master Plan as noted on Page 5.9-34 is dependent on FID's canal system for disposal. The second paragraph on Page 5.9-39 states that the master planned storm drainage facilities are designed to collect, convey and dispose of the runoff. It should also be noted that disposal of the runoff is dependent on FID's canal system.

20. Mitigation Measure HYD-5.2 on Page 5.9-44 includes increasing the size of the retention basin through the purchase of more land or deepening the basin or a combination for planned retention basins. FID agrees with the statement. It also suggests that the size of the emergency relief pump capacity required to pump excess runoff volume out of the basin and into adjacent canal be increased. It should be noted that there is a finite maximum conveyance capacity in the canals and that just merely increasing the pump sizes may not resolve the issue.

21. The City's General Plan indicated that more canals may be left unlined or un-piped to allow for additional recharge. This measure is not consistent with FID's policy and the potential impacts of the increased exposure to a greater population need to be properly evaluated. Public safety and the City's exposure to liability must also be considered and evaluated.

Thank you for making available to us the Draft Master Environmental Impact Report for the City of Fresno General Plan and Development Code Update for our review and allowing us the opportunity to provide comments. We appreciate the opportunity to review and comment on the subject documents for this project. While it is difficult to envision all of the potential impacts without all of the improvement details, we attempted to provide you as much information as possible. We reserve the right to provide additional comments when more detailed information becomes available. If you have any questions please feel free to contact me at 233-7161 extension 7103 or LKimura@fresnoirrigation.com.

Sincerely,

Laurence Kimura, P.E.
Chief Engineer – Special Projects

Attachments

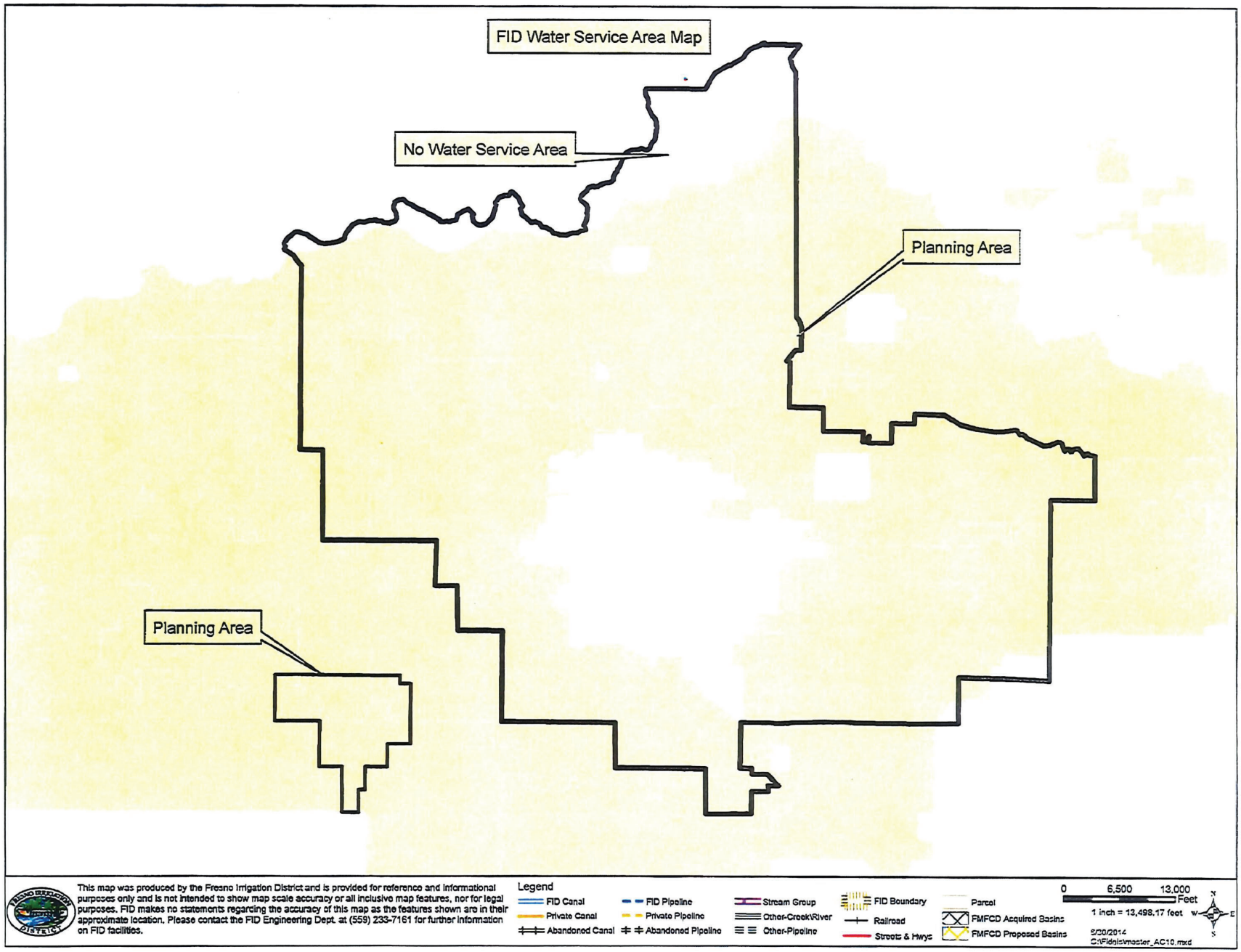


Comment Letter B4 *cont.*

Comment Letter B4 *cont.*

NOTES:

(1) DIMENSIONS AND NOTES ARE FOR LAYOUT PURPOSES ONLY. A SCALED DRAWING SHALL BE PREPARED AND SUBMITTED WITH ALL PLAN SETS PRIOR TO CONSTRUCTION.

(2) IF CULVERT/BRIDGE STRUCTURE CAN COLLECT TRASH ON ITS PIERS, DEVELOPER MUST PROVIDE A SAFE ACCESS TO TRASH PIER RIDER. GALVANIZED STEEL OR CONCRETE CATWALK WITH CHAIN-LINK BARRIER MAY NEED TO BE INCORPORATED INTO CULVERT DESIGN (ON THE UPSTREAM SIDE OF THE BRIDGE/CULVERT STRUCTURE).

(3) DRAINAGE WILL NOT BE ACCEPTED IN THE CANAL AND SHALL BE ROUTED AWAY FROM FID PROPERTY/DRIVE BANKS. SLOPE DRIVE BANKS MINIMUM OF 2% AWAY FROM THE CANAL WITH PROVISIONS MADE FOR RAINFALL. RUNOFF TO BE CONVEYED TO NEARBY PUBLIC STREETS OR DRAINAGE SYSTEM BY DRAINAGE SWALES OR OTHER FID ACCEPTABLE ALTERNATIVES.

(4) WITHIN FID EASEMENT/RIGHT-OF-WAY AREA, ALL EXISTING TREES, BUSHES, DEBRIS, OLD CANAL STRUCTURES, PUMPS, CANAL GATES, AND OTHER NON OR IN-ACTIVE FID AND PRIVATE STRUCTURES MUST BE REMOVED.

(5) RAISED BANKS-1.0 TO 1.5 FEET OF FREEBOARD IS REQUIRED.

(6) BLOCK/MASONRY WALL SHALL BE REQUIRED BETWEEN THE OPEN CANALS AND DEVELOPMENT. CHAIN-LINK FENCING IS AN ACCEPTABLE ALTERNATIVE WITH INTEGRATED VISUAL BARRIERS (SLATS, SCREENS, SHEETING, ETC.) APPROVED ON A CASE-BY-CASE BASIS. WOOD FENCING WILL NO LONGER BE ACCEPTED.

(7) LINE CANAL BANKS OR RAISE SURROUNDING GRADE ELEVATIONS TWELVE (12) INCHES ABOVE HIGH-WATER (HW)

(8) IF AN ACCESS GATE IS PERMITTED BY FID, GATE MUST BE PLACED A MINIMUM OF 115 FT AWAY FROM ROAD, WHERE DRIVEBANK NARROWS TO 20 FT.

(9) THREE (3) INCH THICK GRAVEL BASE MAY BE REQUIRED AT THE ENTRANCE TO EACH DRIVE BANK AS DETERMINED BY FID ENGINEER.

(10) DRIVEWAY APPROACH WIDTH TO BE APPROVED BY FID ENGINEER.

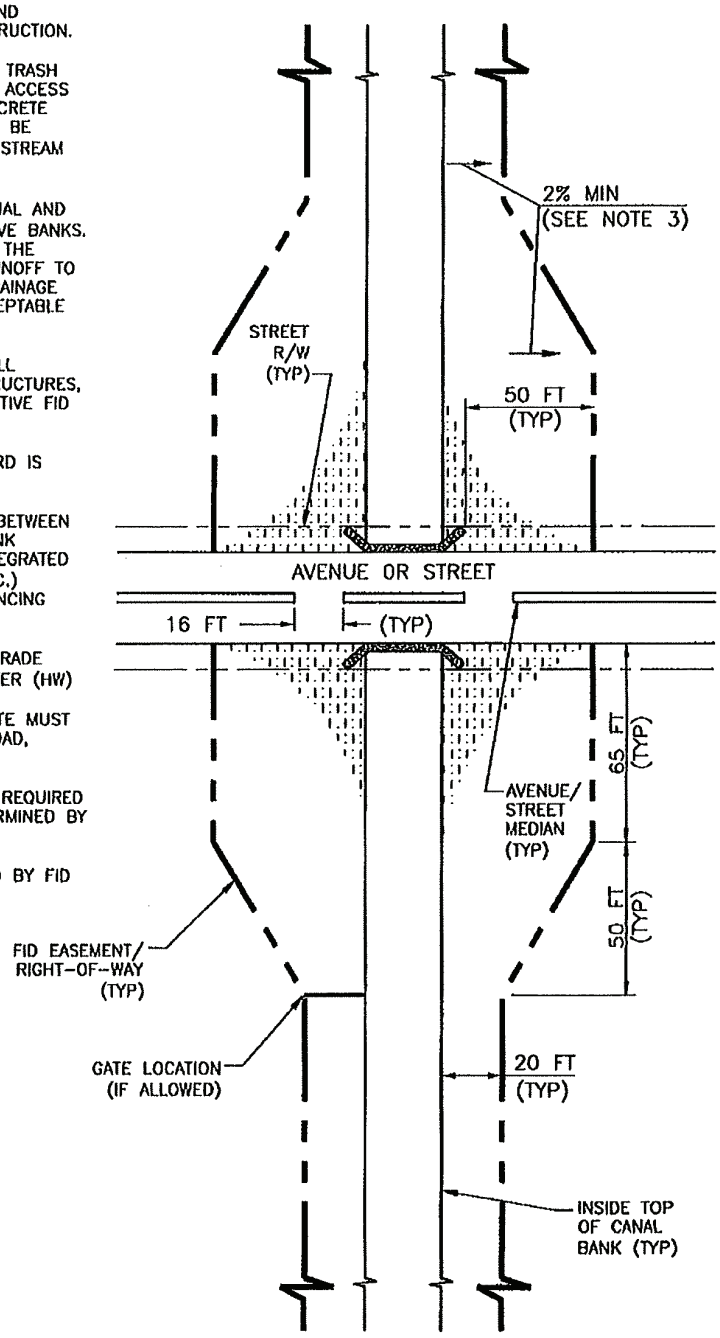


DRIVE APPROACH IN URBAN AREAS

NOT TO SCALE

Comment Letter

C1

**From:** Daniel Brannick [mailto:daniel@odellplanning.com]
**Sent:** Monday, March 23, 2020 4:41 PM
**To:** Sophia Pagoulatos
**Subject:** Review of City of Fresno General Plan Update Draft EIR

Hi Sophia, I'm reviewing the Draft EIR for the General Plan Update, and I noticed there is a "Section 3.2.1.2" mentioned three times in the text that doesn't appear to be included in the Draft EIR. The references I'm referring to are on pages 3-5 and 3-6 (e.g. on page 3-5: "The specific text changes that are proposed are included below in Section 3.2.1.2"). The discussion of proposed changes appears to begin in Section 3.2.2, so I'm thinking there may have been a change in the numbering scheme (or just a typo) rather than an omission of text from the Draft EIR, but I wanted to check with you to confirm that was the case.

(Note – Here is the link I am using to view the Draft EIR: https://www.fresno.gov/darm/wp-content/uploads/sites/10/2020/03/Fresno-GP-Public-Review-Draft-Program-EIR.pdf)

**C1-1**

Daniel Brannick, AICP
**ODELL *Planning & Research, Inc.***
49346 Road 426, Suite 2
Oakhurst, CA 93644
(559) 472-7167
www.odellplanning.com

**This page intentionally left blank**

Comment Letter C2

Central Valley Air Quality Coalition (CVAQ)
4991 E McKinley Ave, Suite 109
Fresno, CA 93727

Monday, May 4th, 2020

Sophia Pagoulatos, Planning Manager
City of Fresno Planning and Development Department
2600 Fresno Street, Room 3065
Fresno, CA 93721

*Submitted electronically*

**RE: Fresno General Plan Program Environmental Impact Report and Air Pollution**

Please accept these comments regarding the air quality component of the city of Fresno's General Plan Program Environmental Impact Report (PEIR), submitted on behalf of the Central Valley Air Quality (CVAQ) Coalition. CVAQ is a coalition of more than 70 public health, environmental, civil rights, and environmental justice organizations advocating for clean air in the San Joaquin Valley. Given the serious public health impacts of our severe regional and local air pollution issues, CVAQ recommends that the PEIR align assessment of individual projects with other ongoing planning processes and include more stringent local thresholds, with particular attention to parts of the city significantly impacted by air pollution.

Fresno is among the top five most polluted cities in the nation in terms of ozone pollution, short term particle pollution, and year-round particle pollution.[1] These pollutants greatly impact Fresno residents by contributing to severe health issues such as asthma, heart attacks, and strokes. Assessment of individual projects and more stringent local thresholds will lead to decreased pollution exposure for Fresno residents, particularly those who are located in overburdened communities and endure higher exposure rates plus experience more social vulnerabilities such as the lack of access to affordable health care and housing. C2-1

Fresno is undergoing several processes that require special attention to reducing emissions and exposure, namely the South Central Specific Plan (SCSP) and the Community Emission Reduction Plan (CERP) for the area of south central Fresno selected under Assembly Bill (AB) 617. These planning processes look toward providing relief to Fresno's overburdened

[1] American Lung Association. *State of the Air: Most Polluted Cities 2020.* Retrieved from. http://www.stateoftheair.org/city-rankings/most-polluted-cities.html

communities. We believe the City of Fresno should align the PEIR thresholds with these two processes in order to meet the emissions reduction targets outlined. Additionally, aligning with these processes will create consistency and uniformity throughout the city's planning processes. **C2-1 cont.**

Furthermore, we do not believe that significant emissions reductions can be accomplished without including more stringent thresholds, as several of the Air Quality Significance Thresholds established by the San Joaquin Valley Air Pollution Control District (SJVAPCD) are weak and do not align with the goals in the SCSP and Fresno CERP. Compared to other agencies, such as the South Coast Air Quality Management District (SCAQMD) and the Bay Area Air Quality Management District (BAAQMD), SJVAPCD falls short in the following:

- **Higher thresholds for fine particulate pollution.** The SJVAPCD currently has a threshold of 15 tons per year (tpy) as opposed to SCAQMD and BAAQMD who set thresholds of 10 tpy. This threshold is particularly significant as fine particulate matter is an extremely dangerous pollutant that can "increase the risk of heart disease, lung cancer and asthma attacks and can interfere with the growth and work of the lungs." [2] Setting a more stringent threshold for this pollutant will significantly contribute to the health and well-being of Fresno residents, particularly in heavily impacted neighborhoods like south central Fresno. **C2-2**
- **Lower Hazardous Pollutant Emissions.** The current threshold is based on potential to increase cancer risk for the person with maximum exposure potential by 20 in a million and Non-cancer Hazard Index > 1. SCAQMD and BAAQMD both have an exposure potential of 10 in a million. Both of these agencies also go beyond what SJVAPCD has done to reduce the exposure hazardous pollutants with SCAQMD including limit of "Cancer Burden > 0.5 excess cancer cases (in areas ≥ 1 in 1 million) Chronic & Acute Hazard Index ≥ 1.0 (project increment)."[3] As for BAAQMD, they have included further limits of " Increased non-cancer risk of > 1.0 Hazard Index (Chronic or Acute); Ambient PM2.5 increase: > 0.3 µg/m3 annual average; Zone of Influence: 1,000-foot radius from property line of source or receptor" [4]

As Fresno looks to address air pollution and its impacts to public health and quality of life, this PEIR will play an important role. In order to meet various emissions reductions goals and to improve the health and wellbeing of Fresno residents, the PEIR will need to adopt an assessment **C2-3**

[2] American Lung Association. *Particle Pollution.* Retrieved from. https://www.lung.org/clean-air/outdoors/what-makes-air-unhealthy/particle-pollution

[3] South Coast Air Quality Management District. *South Coast AQMD Air Quality SIgnificance Thresholds.* Retrived from https://www.aqmd.gov/docs/default-source/ceqa/handbook/scaqmd-air-quality-significance-thresholds.pdf?sfvrsn=2

[4] Bay Area Air Quality Management District. *California Environmental Quality Act: Air Quality Guidelines.* Pg 2-2. Retrieved from. https://www.baaqmd.gov/~/media/files/planning-and-research/ceqa/ceqa_guidelines_may2017-pdf.pdf?la=en

Comment Letter C2 *cont.*

of individual projects that aligns with ongoing processes and includes more stringent local thresholds to protect and provide immediate relief to Fresno's overburdened communities. **C2-3 cont.**

Please do not hesitate to contact us if you need further information or have any questions.

Sincerely,

Catherine Garoupa White

Catherine Garoupa White, MSW, PhD
Executive Director, Central Valley Air Quality Coalition

**This page intentionally left blank**

Comment Letter C3

May 5, 2020

Sophia Pagoulatos, Planning Manager
Development and Resources Management Department
City of Fresno
2600 Fresno Street, Room
Fresno, CA 93721
Sophia.Pagoulatos@fresno.gov

***Submitted Via Email***

**RE: Fresno General Plan Draft Programmatic Environmental Impact Report**

Dear Ms. Pagoulatos:

Thank you for the opportunity to submit comments on the City of Fresno's Draft Programmatic Environmental Impact Report ("DPEIR") for the City's 2035 General Plan. These comments aim to assist the City in its preparation of a Final PEIR that protects and advances environmental quality, public health, and human well-being in disadvantaged communities located within the Planning Area and at large and that complies with the text and spirit of the California Environmental Quality Act (Pub. Res. Code § 2100, *et seq*), fair housing and civil rights laws (e.g., Gov. Code §§ 12900, *et. seq.*, 11135, 65008, 8899.50; 42 U.S.C. § 2000d, *et seq.*, 3601, *et seq.,* 5304(b)(2)&(s)(7B), & 12075), and other applicable law.

As drafted, the DPEIR is fundamentally inconsistent with CEQA's requirement that an EIR fully and accurately inform decision-makers and the public of the environmental consequences of proposed actions and identify all feasible mitigation measures to minimize those impacts. *See* Pub. Res. Code §§ 21002, 21002.2., 21061; 14 C.C.R. § 15364. To start, the DPEIR dramatically understates the project's impacts by defining the project as "continued implementation of the General Plan" and using the inapplicable baseline year of 2019 instead of the correct baseline year of 2012. As a result, the DPEIR unlawfully ignores the environmental impacts of five years of General Plan implementation from its calculations. With respect to the DPEIR's substantive analysis, the DPEIR fails to disclose, analyze, and propose feasible and effective mitigation measures to minimize the project's potentially significant environmental impacts related to aesthetics, air quality, water supply, land use, traffic, displacement of people and housing, and public health, among others. These deficiencies include failures by the DPEIR to acknowledge and mitigate General Plan impacts which uniquely and/or most acutely burden lower-income communities of color and communities with high proportions of residents who speak languages other than English compared to the Planning Area as a whole. The DPEIR's deficient impact analysis and failure to identify adequate mitigation measures to address impacts disproportionately harms these communities which are the most vulnerable to the project's impacts. Thus, the DMEIR not only violates CEQA but results in violations of state and federal

C3-1

fair housing and civil rights laws which require the City to both avoid discrimination and to affirmatively further fair housing[1].

The City must revise and recirculate the DMEIR to provide the public with an accurate assessment of the environmental issues at stake and mitigation measures that fully address the Project's significant impacts. The revised DMEIR must also thoroughly consider and identify mitigation measures to address the project's substantial adverse effects on human beings. Pub. Res. Code § 21083(b); 14 C.C.R. § 15065. The City must also describe and evaluate alternatives to the project that eliminate or reduce the project's significant environmental effects, including disproportionate impacts on disadvantaged communities. Pub. Res. Code § 21002, 21002.1(a), 21100(b)(4);14 C.C.R. § 15126.6(a). **C3-1 cont.**

## I. The DPEIR's Failure to Disclose and Adopt Feasible Mitigation Measures to Address the Impacts Associated with the General Plan's Designation of Entire South Fresno Neighborhoods for Industrial Development

These comments include a particular focus on the impacts of the General Plan's land use designation and policies that allow, facilitate, and promote heavy industrial and warehouse development in and around disadvantaged South Fresno communities. The General Plan designates approximately 6,150 acres of land for heavy industrial development in an area which the General Plan calls the South Industrial Priority Area ("SIPA"). *See* General Plan, Figure IM-1, Priority Areas for Development Incentives, 12-26; City of Fresno South Industrial Priority Area (SIPA) Specific Plan, p. 7[2]. This includes approximately 772 acres of land within City limits, 1,053 acres outside of City limits and within the City's current sphere of influence ("SOI"), and 1,208 acres of land outside of the SOI which the City identifies as "undeveloped". The land designated within the SIPA for heavy industrial development, as well as in other areas of the City including the Jane Addams and Roeding Park neighborhoods, surrounds and includes entire residential neighborhoods and communities, as well as individuals homes, places of worship, neighborhood markets, and other community-serving businesses and amenities. As discussed in more detail in this letter below, the communities and neighborhoods which the General Plan designates for industrial development comprise some of the most pollution-burdened neighborhoods in Fresno and the entire state and are disproportionately comprised of people of color, immigrants, and people with limited English language abilities and/or whose first language is a language other than English. **C3-2**

[1] Government Code section 8899.50 defines affirmatively furthering fair housing ("AFFH") as "taking meaningful actions, in addition to combating discrimination, that overcome patterns of segregation and foster inclusive communities free from barriers that restrict access to opportunity based on protected characteristics. Specifically, affirmatively furthering fair housing means taking meaningful actions that, taken together, address significant disparities in housing needs and in access to opportunity, replacing segregated living patterns with truly integrated and balanced living patterns, transforming racially and ethnically concentrated areas of poverty into areas of opportunity, and fostering and maintaining compliance with civil rights and fair housing laws." Gov. Code § 8899.50(a)(1). California law provides that a duty to AFFH "extends to all of a public agency's activities and programs relating to housing and community development" and mandates that a public agency "shall take no action that is materially inconsistent with its obligation" to AFFH. Gov. Code § 8899.50(a)(1)&(b).
[2]Available on the City of Fresno's website at https://www.fresno.gov/darm/wp-content/uploads/sites/10/2019/05/SIPA_doc_v4-pressready-1.pdf

The introduction of thousands of acres of new industrial development into these communities, including where neighborhoods and homes currently exist, as anticipated by the General Plan will result in – and has already resulted in – severe short and long-term impacts on environmental quality, public health and well-being in Fresno's most vulnerable neighborhoods. Yet from our review, the DPEIR fails to acknowledge or analyze the environmental and human impacts of the General Plan's designation of South Fresno neighborhoods for heavy industrial development and its goals and policies aimed at facilitating and expediting this development. The DPEIR also fails to identify enforceable mitigation measures which would address the particular significant impacts that arise as a result of these land use designations and policies. Our comments below discuss these omissions. In order to comply with CEQA and fair housing and civil rights laws, the City must revise the DPEIR to fully disclose and analyze the impacts of the General Plan's industrial development land use designations and policies and identify robust and enforceable mitigation measures and alternatives that minimize, and wherever possible, avoid, these impacts.

**C3-2 cont.**

While numerous mitigation measures are available to the City to reduce and avoid impacts associated with its industrial development policies for all impact categories, the enactment of buffers between residential neighborhoods and industrial development through the re-designation of land from industrial to less intensive and community-serving land uses (e.g., grocery stores, retail and commercial centers, parks and green space, and health clinics) would reduce project impacts in all impact categories. Land use re-designation is an effective and feasible mitigation measure that falls clearly within the City's land use authorities. For your convenience, we have attached to this letter a copy of proposed land use map that we previously submitted to the City that reflects alternative land use designations in the SIPA which would reduce environmental impacts on sensitive land uses in the area. The land use map was developed in consultation with residents from impacted communities and neighborhoods in Southwest Fresno (the community located at Roy and Almy Avenues), South Central Fresno (the communities located along East Central Avenue between Orange and Cedar Avenues and on Malaga Avenue and the community of Daleville), Calwa, and Malaga. Attachment 1. Note that the land use designations abbreviations reflected in the map are the same land use designations used in the General Plan.

## II. <u>The DPEIR's Mitigation Measures Fail to Comply with CEQA</u>

### A. The DPEIR Inappropriately Defers Mitigation, Identifies Unenforceable and Ineffective Measures, and Fails to Assess Feasible & Effective Measures The DPEIR Ignores Feasible Mitigation Measures, Including the Adoption of Alternative Land Use Designations

**C3-3**

The DPEIR routinely fails to identify feasible and effective mitigation measures for the project's potentially significant impacts in various impact categories and instead choses to identify mitigation measures which defer identification of specific mitigation to future projects that undergo CEQA review despite the fact that many projects that proceed with General Plan implementation will be subject to only ministerial review and not be subject to CEQA. In

addition, the DPEIR identifies numerous mitigation measures which will not reduce the associated impact, because the measures are vague and/or not enforceable. In a number of cases, the DPEIR simply fails to identify any mitigation measure to address impacts identified in the analysis. And for several of the significant and unavoidable impacts identified by the DPEIR, the DPEIR concludes that no feasible mitigation is available or identifies mitigation measures that the DPEIR acknowledges will not reduce the impact to a less than significant level while ignoring other feasible mitigation measures that would substantially reduce the impact.

Among other available mitigation measures, the DPEIR never considers changes to land use designations and intensities as potential mitigation measures even though such changes could significantly reduce a variety of significant impacts identified in the DPEIR, including but not limited to aesthetic, light, noise, air pollution, public health, traffic, and greenhouse gas emissions, among others. Similarly, the DPEIR does not consider changes to its Development Code which would reduce such impacts (see this letter's discussion of the DPEIR's analysis of project impacts on sensitive receptors for examples of Development Code amendments which would reduce air quality impacts and could be fashioned to reduce project impacts in other categories).

The City cannot approve projects with significant environmental impacts if any feasible mitigation measure or alternative is available that will substantially environmental effects of a project. Pub. Res. Code § 21002; CEQA Guidelines § 15126(a). The City is legally required to mitigate or avoid the significant impacts of the projects it approves wherever it is feasible to do so. Pub. Res. Code § 21002.1(b); *Covington v. Great Basin Unified Air Pollution Control Dist.* (2019) 43 Cal.App.5th 867, 879. A feasible mitigation measure is one that is capable of being accomplished in a successful manner within a reasonable period of time, taking into account economic, environmental, social, legal, and technological factors. Pub. Res. Code § 21061.1; CEQA Guidelines § 15364; *Covington* (2019) 43 Cal.App.5th at 878. **C3-3 cont.**

Mitigation measures may be incorporated into any plan, policy, regulation, or project and include measures which minimize impacts by limiting the degree or magnitude of the action and its implementation. § 15126.4(a)(2); CEQA Guidelines § 15370(b). Mitigation measures should include changes in where development is planned, what kind is planned, and how dense or intense that development is planned to be, including through changes to the General Plan Land Use Diagram and Development Code standards for the development under specific zone districts.

The DPEIR explicitly states that no changes to General Plan land use designations or intensities are proposed. Neither does the DPEIR propose or consider any changes to the Development Code to lessen the severity of the impacts of new industrial development, including on vulnerable disadvantaged communities and sensitive receptors.

## III. <u>The Project Description Inaccurately Limits the Project's Scope to "Continued Implementation of the General Plan" and Fails to Include the Citywide Development Code</u> **C3-4**

Comment Letter C3 *cont.*



An accurate, stable and finite project description is the *sine qua non* of an informative and legally sufficient EIR. *County of Inyo v. City of Los Angeles* (1977) 71 Ca.3d 185, 192. An EIR's project description must contain sufficient specific information about the project to allow the public and reviewing agencies to evaluate and review its environmental impacts. The description cannot narrow the scope of environmental review or minimize the project's impacts on the environment. *Dry Creek Citizens Coalition v. County of Tulare* (1999) 70 Cal.App.4th 20, 26 & 36; *Santiago County Water Dist. v. County of Orange* (1981) 117 CA3d 818, 829. Numerous courts have affirmed the central importance of the project description to an adequate EIR. *See e.g., Washoe Meadows Community v. Department of Parks & Recreation* (2017) 17 CA5th 277, 287.

The DPEIR fails to satisfy CEQA's requirements regarding project descriptions, because the project description inaccurately describes the "project". Section 3.2, "Project Characteristics," contained within Section 3.0, "Project Description," provides the following description of the project:

> "The intent of the project is to update the text of the General Plan in order to reflect changes in applicable statutes and regulations related to Vehicle Miles Traveled (VMT), as well as updating the EIR to include a current baseline for the continued implementation of the General Plan, and reflect changes in City planning documents since adoption of the General Plan in 2014. The project also includes an update to the City's Greenhouse Gas Reduction Plan. In doing so, the City is converting the previously-certified MEIR to a PEIR with the goal of extending the life of the environmental document for the General Plan, pursuant to *State CEQA Guidelines* Section 15179 (Limitations on the Use of Master EIRs)." (3-5)

**C3-4 cont.**

Contrary to this description, the City's conversion of the certified MEIR to a PEIR through the preparation and certification of the PEIR and the contents of the PEIR, including a 2019 baseline, is not a "project" in itself. *See* 14 C.C.R. § 15378. The term "project" refers to the proposed activity that requires approval by a public agency. C.C.R. § 15378(c). An EIR in itself is not a discretionary project triggering that very same EIR under CEQA. Given the City's statement that it is "converting the previously-certified MEIR to a PEIR," the "project" is the same project which required approval at the time the MEIR was certified – the 2014 General Plan and the Development Code Update[3], along with the amendments to the General Plan and Development Code approved since those documents' adoption and the proposed revisions to the General Plan Transportation and Mobility Element described in the DPEIR. The City is not proposing to take any action at this time to allow or prohibit the "continued implementation of the General Plan," and thus no project with such a description exists for the DPEIR to analyze.

The "Project Characteristics" description does not identify the 2014 General Plan as the project, or a component thereof. On the other hand, Section 3.2.1 briefly describes the existing General Plan and the DPEIR's Executive Summary states that:

[3] The MEIR describes the project as "comprised of two components: the General Plan Update and the Development Code Update." 2-2.

Comment Letter C3 *cont.*



> "The purpose of this Draft PEIR is to inform public agency decision-makers, representatives of affected and responsible agencies, the public, and other interested parties of the potential environmental effects that may result from continued implementation of the approved General Plan."

The DPEIR characterizes the project as the "continued implementation of the approved General Plan" on several other occasions. *See e.g.,* p. 1-1, 1-2, 1-5.

"Project'" for purposes of CEQA "means the whole of an action, which has a potential for resulting in either a direct physical change in the environment, or a reasonably foreseeable indirect physical change in the environment." *Id.* 14 C.C.R. § 15378. A complete project description is necessary to ensure that the environmental impacts of the entire project are considered. *City of Santee v. County of San Diego* (1989) 214 CA3d 1438, 1454. When the agency's activity involves a regulation, as compared to building a physical structure, such as a road or power plant, "the whole of the activity constituting the "project" includes the enactment, implementation and enforcement of the regulation. *POET, LLC v. State Air Resources Board* (2017) 12 Cal.App.52, 57. Here, both the project components identified in Section 3.2 and the "continued implementation of the 2014 General Plan" are only a part of the whole action -- the 2014 General Plan, the Development Code, amendments to the 2014 General Plan since its adoption, proposed amendments to the General Plan Transportation and Mobility Element, including the enactment, implementation, and enforcement of those documents and provisions from start to finish. Since the DPEIR's two characterizations of the project both fail to account for the implementation of the 2014 General Plan and the Development Code from start to finish, the DPEIR fails to account for the whole of the action at issue as required. And repeal of the MEIR and adoption of the PEIR would leave the project of the 2014 General Plan and Development Code itself without certified environmental review for those projects. **C3-4 cont.**

Significantly, nowhere at all does the DPEIR identify the Development Code Update as a component of the "project" nor does the DPEIR contain any description of the Development Code Update or any analysis of its environmental impacts. The Development Code, Chapter 15 of the City of Fresno's Municipal Code, is an approximately 570-page document that establishes the standards and administrative processes applicable to the approval and operation of all land uses within the City of Fresno city limits. While one of the purposes of the Development Code is to implement the General Plan, the Development Code was also adopted to achieve a series of 11 unique objectives, which are distinct from those set forth in the General Plan. Fresno Municipal Code ("FMC") § 15-102. The standards and processes set forth in the Code reflect thousands of discrete choices by the City of Fresno which are not dictated by the General Plan and which individually and collectively result in a significant impact on the environment.

For example, Part II: Base and Overlay Districts establishes the permit requirements for land uses within each of the City's zone districts, including which land uses may proceed by right with no further discretionary review and those which require discretionary approval pursuant to a Conditional Use Permit. The Development Code for instance allows any "General Industrial Use" and Wholesaling and Distribution to occur by right in Heavy Industrial zone

districts. § 15-302, Table 15-302. The Development Code defines "General Industrial Use[4]" to encompass a sweeping range of industrial land uses and uses encompassed by the General Industrial Use definition and Wholesaling and Distribution have known impacts on the environment and human health. Part II of the Development Code also establishes requirements for minimum setbacks of buildings from property lines, building height, and density limitations, among other things, all of which directly and indirectly impact the environment and surrounding properties in a myriad of ways. *See* e.g., § 15-304. As further examples, Article 25 of the Development Code sets performance standards for land uses which establish acceptable impacts, including but not limited to noise, vibration, light, glare, dust, odor impacts, on surrounding properties, and Part V of the Development Code establishes findings required regarding acceptable impacts on public health, safety, and property for the issuance of discretionary permits and conditions of approval which the planning director may impose to achieve Development Code objectives. *See* FMC, Ch. 15, Article 25; *See e.g,* §§ 15-5306 & 15-5307. The Development Code clearly requires environmentally review pursuant to CEQA and the City may not "convert" the MEIR to the PEIR without ensuring that that review is in place.

The DPEIR's failure to include the entire project in its description, including implementation of both the General Plan and the Development Code over their entire life cycles, violates CEQA and results in an inaccurate impacts analysis that likely significantly underestimates the project's impacts.

**C3-4 cont.**

## IV. <u>The Applicable Baseline for the PEIR is 2012 Not 2019</u>

The DPEIR's use of 2019 for the baseline year for the environmental setting is inconsistent with case law on the matter given that the City's intention is to use the PEIR as a substitute for the 2014 General Plan and Development Code MEIR. Rather, the correct baseline year for this project is 2012, the baseline year for the General Plan and Development Code when the City circulated the Notice of Preparation for the MEIR.[5]

In *POET LLC v. State Air Resources Board* (2017), 12 Cal.App.5th 52, the Court held that the State Air Resources Board (ARB) failed to comply with a writ of mandate compelling ARB to correct deficiencies in its EIR for regulations that ARB adopted in 2009, because it used a baseline for subsequently adopted modifications to those regulations to determine the project's air emissions. The Court found that, contrary to ARB's view, the "project" included "the whole of ARB's activity in promulgating and enforcing...the regulations originally adopted in 2009" as well as "replacement regulations adopted in 2015 in response to the writ of mandate." 12 Cal.App.5th 52, 57. The Court continued:

**C3-5**

[4] FMC § 15-6705 defines "General Industrial" as follows: "Manufacturing of products from extracted or raw materials or recycled or secondary materials, or bulk storage and handling of such products and materials. This classification includes operations such as food and beverage processing (excluding animal food manufacturing); production apparel manufacturing; photographic processing plants; leather and allied product manufacturing; wood product manufacturing; paper manufacturing; plastics and rubber products manufacturing; nonmetallic mineral product manufacturing; primary metal manufacturing; fabricated metal product manufacturing; and automotive and heavy equipment manufacturing."

[5] The Notice of Preparation is available at the City of Fresno's website at https://www.fresno.gov/darm/wp-content/uploads/sites/10/2016/11/A-1-Notice-of-Preparation-and-Initial-Study.pdf

> "Consequently, ARB's view that the "project" included only the regulations adopted in 2015 was wrong and explains why it incorrectly chose 2014 NOx emissions as the baseline. The proper baseline for a project normally is the conditions existing when the environmental review of the project is commenced. Here, ARB's review commenced before the regulations were first approved in 2009. Thus, ARB's use of 2014 NOx emissions as the baseline was improper and generated flawed results when that baseline was plugged into the formula for calculating environmental change."

**C3-5 cont.**

Like the DPEIR's incomplete project description, the DPEIR's selection of an inaccurate baseline undermines the credibility and accuracy of the DPEIR's analysis and likely results in significant underestimates of the project's impacts. The City must revise and recirculate the DPEIR in order to use a correct baseline which dates to the initiation of environmental review of the "whole action" before the City: the issuance of the Notice of Preparation for the General Plan and Development Code in 2012.

## V. <u>The DPEIR Fails to Adequately Analyze and Mitigate the Project's Aesthetic Impacts of Industrial Development in Rural and Residential Areas</u>

The aesthetic, light and glare impacts resulting from implementation of the General Plan and Development Code has and will continue to significantly detrimentally residents in the Planning Area, including in particular incorporated and unincorporated rural and residential-areas in the Southern portion of the Planning Area due to the extensive industrial development planned for these areas. The DPEIR fails to adequately analyze these impacts, acknowledge potentially significant impacts on scenic vistas, or identify and adopt feasible mitigation measures which would reduce the aesthetic, light and glare impacts on the environment and residents.

**C3-6**

## VI. Substantial Adverse Impacts on Scenic Vistas in Rural and Residential Areas

The DPEIR concludes that the project would not have a substantial adverse effect on a scenic vista and that no mitigation is required to achieve this result. The analysis supporting the DPEIR's conclusion however fails to acknowledge or describe the impacts on scenic vistas of the Sierra Nevada Mountain Ranges and rural agricultural landscapes that implementation of the General Plan has had and will continue to have on neighborhoods in the Southern portion of the Planning Area which are designated by the General Plan Land Use Map for industrial development.

**C3-7**

The DPEIR states that:

> "scenic vistas may be impacted in two ways: a development project can have visual impacts by either directly diminishing the scenic quality of the vista or by blocking the view corridors or "vista" of the scenic resource. Important factors in determining whether a proposed project would block scenic vistas include the project's proposed height, mass, and location relative to surrounding land uses and travel corridors. Typical

scenic vistas are locations where views of rivers, hillsides, and open spaces are accessible from public vantage points." (4.1-3)

The General Plan's designation of thousands of acres of land for industrial development in and around neighborhoods in the Southern portion of the Planning Area has and will continue to directly diminish the quality and block the view of scenic vistas from both public and private spaces. These impacts arise as a result of the construction of large industrial warehouses and other industrial buildings on previously and/or currently vacant land and land occupied by agricultural or low-density residential uses and heavy truck and car traffic on local roadways generated by these industrial facilities. The height, mass, and location of industrial development permitted by the General Plan and Development Code and of the truck and car traffic which this development generates has and will have a substantial adverse impact on scenic vistas.[6]

Since the General Plan's adoption, multiple warehouse distribution facilities have been developed and permitted in the area on previously vacant land or land occupied by agricultural or residential uses. As mentioned above, the General Plan designates approximately 6,000 acres of land for industrial development in the South Industrial Priority Area which have yet to be developed.

The Development Code permits buildings in all industrial zone districts, including the Heavy Industrial, Light Industrial, Regional Business Park, and Business Park zone districts, to stand up to 60 feet tall (or up to 30 or 40 feet when the building is within 40 or 50 feet of a residential property line) and requires buildings in those zone districts to be set back just 15 feet from the property line. FMC § 15-303, Tables 15-302-1 & 15-302-2. The construction of these buildings mars the scenic vista of the rural agricultural setting, as low-lying vineyards, agricultural lands, and small residential communities become interspersed with expansive and towering buildings in relation to the setting. The industrial buildings and other features of industrial sites, like retaining walls and berms, also substantially or completely block views of the Sierra Nevada Mountain Ranges from both public and private spaces depending on the location of the observer. For instance, since the adoption of the 2014 General Plan, the construction of the Ulta Beauty distribution facility and retaining walls along the facility's perimeter at 850 East Central Avenue has blocked the previously open view of the Sierra Nevadas from within the community of Daleville on E Daleville and S Mary Avenues.

**C3-7 cont.**

Constant truck and car traffic going to and from industrial facilities anticipated by the General Plan also diminishes the quality of and blocks scenic vistas in the Southern portion of the Planning Area. Pursuant to the California Vehicle Code, trucks may be up to 14 feet in height, and the average car is five to six feet tall. The near constant passage of these vehicles along local roadways substantially diminishes the quality and blocks the view of both the Sierra Nevadas and agricultural lands for pedestrians and users of private property throughout the area.

In summary, the DPEIR's analysis is incomplete, because it fails to describe the project's potentially significant impacts on scenic vistas due to the General Plan's designation of land throughout the SIPA for industrial use and Development Code standards; and the DPEIR's

[6] The DPEIR

conclusion that project impacts to scenic vistas are less than significant without mitigation is incorrect given the clearly substantial impacts to scenic vistas that will arise due to the project.

Given this, the DPEIR must consider and identify feasible and legally enforceable mitigation measures to reduce the project's impacts to scenic vistas on rural and residential areas in the SIPA. We recommend that the City consider the following measures to reduce these impacts:

**C3-7 cont.**

- Revise the General Plan land use designations for the SIPA to non-industrial land use designations (i.e, designations other than Heavy Industrial, Light Industrial, Regional Business Park, and Business Park) adjacent to schools, places of worship, neighborhoods, residences, and public parks.
- Revise the Development Code to reduce the maximum building height allowed in Employment Districts where buildings would block the view of a scenic vista from a school, place of worship, neighborhood, residence, or public park.
- Revise the Development Code to require buildings in industrial zone districts to comply with further set back from property lines

## VII. Significant Adverse Impacts on Visual Character and Quality of Rural and Residential Neighborhoods

The DPEIR recognizes that the land uses proposed by the General Plan would replace existing rural, agricultural, and open space uses and that as a result, continued implementation of the General Plan will substantially alter the visual character within the Planning Area. Yet the analysis fails to describe magnitude and severity of this impact, including in communities and neighborhoods located in these areas, and the DPEIR fails to identify feasible mitigation measures that would effectively reduce the projects impacts on visual character and quality. The City must revise the DPEIR to address these flaws and recirculate it for public review and comment. *Sierra Club v. County of Fresno* (2018) 6 C5th 502, 514 ([A]n EIR's designation of a particular adverse environmental effect as 'significant' does not excuse the EIR's failure to reasonably describe the nature and magnitude of the adverse effect.); *City of Long Beach v. City of Los Angeles* (2018) 19 CA5th 465, 486.

**C3-8**

As discussed above, the General Plan land use designations and Development Code standards permit extensive industrial development throughout the SIPA in and around rural areas and residential communities. The project has and will continue to dramatically adversely impact the visual character and quality of these areas due to changes in site utilization and building structures which both result in the loss of and contrast with the rural and low-density aesthetic features of the area. By designating the entire SIPA for industrial development except for certain public facilities such as existing schools and ponding basins, the project proposes to replace all existing agricultural and residential uses, including the entire community of Daleville, to industrial use. Bucolic vineyards, single-family farm residences, and single-family residences and neighborhoods would be replaced with concrete warehouses and other industrial facilities up to 60 feet tall. These changes would significantly degrade the visual character or quality of views from both public spaces, including public roadways, sidewalks, schools, places of worship, and other community spaces.

The DPEIR's significance criteria for impacts to visual character and quality do not include impacts to views from privately-owned spaces. The DPEIR provides no explanation for this exclusion. The adverse impacts to visual character and the quality of views on public sites also extend to privately-owned spaces, including the thousands of homes located in and immediately adjacent to the SIPA. The DPEIR must acknowledge and identify adequate mitigation to address these impacts too. **C3-8 cont.**

While the DPEIR acknowledges that the project will result in a potentially significant impact on visual character and quality of public views, it states that no feasible mitigation measures are available without even considering any measures at all. Contrary to what the DPEIR states, feasible and effective mitigation measures to avoid and reduce the impact exist and the DPEIR must be revised to incorporate them.

## VI. The DPEIR's Fails to Adequately Analyze and Identify Feasible Mitigation to Address The Project's Significant Transportation-Related Impacts on VMT and Alternative Modes of Transportation

### A. The DPEIR Fails to Disclose Critical Information Necessary for an Identification of the Project's VMT Impacts and Unlawfully Fails to Identify a Threshold of Significance for VMT Impacts

The DPEIR identifies consistency with CEQA Guidelines section 15064.3 as a criteria for determination of whether a significant impact related to transportation would result from the project, but the DPEIR's subsequent analysis of this impact fails to (1) include information necessary to a determination of whether consistency is achieved and (2) identify thresholds of significance for VMT impacts. The DPEIR concludes that impacts in this category are less than significant, because of the DPEIR's own decision not to adopt a significance threshold. As explained further below, the DPEIR's analysis with respect to this criteria is inadequate and violates CEQA. **C3-9**

The only quantitative information regarding current and forecasted VMT that the DPEIR provides regarding VMT is contained in Table 4.16-2. DPEIR, 4.16-40. A footnote to the table indicates that the information contained in the table was derived from the "Fresno Council of Governments Regional Travel Demand Model (2019)". However, the DPEIR provides no information at all about how the Regional Travel Demand Model calculates household or employment VMT for the City and County or about the assumptions that underlie the model. For example, the DPEIR does not explain whether the VMT figures include trips with a destination or origin in the City or County of Fresno but with an origin or destination beyond the City or County and if so, whether VMT measured includes the portions of those trips that extend beyond City and County limits. The DPEIR also does not state whether Table 4.16-2's city and county employment VMT figures include VMT from truck and car trips made by employees during the course of work and/or commute trips or whether those figures include truck trips made to and from development in Fresno by individuals who do not reside in and/or are not employed within the Planning Area. From our review of available documents, the DPEIR does not contain any copies with information describing the Regional Travel Demand Model or links

to websites where a reader can learn more about the model. The failure to provide basic information about the nature of Regional Travel Demand Model undermines its ability to shed light on the project's VMT-related impacts for the public and decision-makers and its usefulness in assisting with a determination of the level of significance of VMT impacts.

Perhaps even more significantly, the DPEIR's selection of consistency with CEQA Guidelines section 15064.3(b) only to state that the City has not and is not legally required to adopt VMT thresholds at this time and therefore determines that the impacts for this category are less than significant turns the principles of CEQA on their head. Section 15064.3(c) allows a lead agency to "elect to be governed by the provisions of [the] section immediately," rather than waiting until July 1, 2020, when the provisions shall apply statewide. Having elected to establish consistency with Section 15064.3(b) as a criteria for significance for purposes of the DPEIR, the fact that Section 15064.3's application becomes mandatory for all projects only as of July 1, 2020 is irrelevant and the DPEIR must select a threshold of significance by which to assess significant VMT impacts. The DPEIR does not claim that development of a threshold of significance for VMT impacts is infeasible at this time nor does it provide any basis for its failure to select a VMT threshold of significance other than its claim that it is not legally required to until the July 1, 2020 deadline. **C3-9 cont.**

These failures violate CEQA. *See e.g.,* 14 C.C.R. § 15151 (stating that "[a]n EIR should be prepared with a sufficient degree of analysis to provide decisionmakers with information which enables them to make a decision which intelligently takes account of environmental consequences" and "the sufficiency of an EIR is to be reviewed in the light of what is reasonably feasible"). If DPEIR retains consistency with section 15064.3(b) as a criteria for significance of the project's transportation impacts, the City must revise and recirculate the DPEIR so that it identifies a threshold and provides the information necessary to evaluate the project's impacts against that threshold.

**B. The DPEIR Fails to Disclose, Analyze, or Identify Feasible Mitigation Measures For the Project's Significant Impacts on Pedestrians, Cyclists, or Transit Riders**

The DPEIR contains no information or analysis of the project's impacts on pedestrians or cyclists. In fact, the DPEIR explicitly states that the DPEIR's Transportation Impact Analysis measures transportation impacts on roadway segments using level of service and that:

> "[t]his methodology does not consider potential impacts on walking, biking, and transit. Pedestrians, bicyclists, transit riders are all users of the roadway system but may not be fully recognized in the traffic operations analysis and the calculation of LOS." 4.16-4.

**C3-10**

The DPEIR lists certain General Plan policies relating to walking, biking, and public transportation. The DPEIR also dedicates significant space to policies contained within the City's Active Transportation Plan, a plan which was adopted after the General Plan and which is not a component thereof. The DPEIR does not include any discussion however of how the project itself might impact pedestrians, cyclists, or public transit users, to what extent the policies identified may or may not effects the degree or nature of those impacts, and whether project

impacts to pedestrians, cyclists, or public transit users are potentially significant and require mitigation.

These omissions result in disproportionate impacts to residents of lower-income neighborhoods and neighborhoods of color in South Fresno which disproportionately rely on active transportation and public transit and which disproportionately lack basic infrastructure (e.g., sidewalks, streetlights, cross walks, storm water drainage) to accommodate walking and biking safely. These disproportionate impacts are deepened as a result of the General Plan's designation of these same neighborhoods for heavy industrial and warehouse development which the DPEIR acknowledges generate significant truck and car traffic. Pedestrians and cyclists forced to share the road with intensive truck and car traffic will be impacted by the air pollution, noise, and vibration generated by that traffic and the safety hazard of walking and biking on roads shared by trucks without sidewalks, crosswalks, or other protective measures. **C3-10 cont.**

## VII. The DPEIR Fails to Adequately Analyze and Mitigate the Project's Air Quality Impacts

The City of Fresno and the surrounding San Joaquin Valley Air Basin suffer from some of the nation's worst air quality. In its 2020 State of the Air Report, the American Lung Association graded the Fresno-Madera-Hanford Metropolitan Area as the city with the worst short-term air pollution (24-hour $PM_{2.5}$) the nation. pp. 8, 20. The State of the Air Report also ranked the Fresno Metropolitan area the second worst city for annual particle pollution and the fourth most ozone polluted city.[7] ALA, State of the Air Report, pp. 9, 21, 22. While the entire population is adversely impacted by Fresno's poor air quality, people of color, people in poverty, children, the elderly, and people with underlying health conditions – all of whom comprise a significant portion of Fresno's population – face heightened health risks. *Id.* pp. 20, 21, 37, 66. It is therefore imperative that the DPEIR provide an accurate assessment of the project's potential to further degrade air quality and that it identify all feasible mitigation measures to minimize its impacts on the population and vulnerable groups in particular. Nevertheless, as explained below, while the DPEIR acknowledges that the project would cause a substantial increase in air pollution, it fails to include the complete and accurate information necessary to allow the public and decision-makers to understand the nature or magnitude of its impacts, including its impacts on public health in disadvantaged communities and among vulnerable populations, and as a result, fails to identify mitigation measures to reduce those impacts. **C3-11**

### A. The DPEIR Fails to Support its Conclusion that the Project Will Not Violate Applicable Air Quality Plans With Facts

The DPEIR concludes that the Project would not conflict with or obstruct implementation of the applicable air quality plans ("AQPs"). Applicable AQPs adopted by the San Joaquin Valley Air Pollution Control District ("SJVAPCD" or "Air District") include the following: **C3-12**

- 2004 Revision to the California State Implementation Plan for Carbon Monoxide

[7] The ALA's 2020 State of the Air Report is available at http://www.stateoftheair.org/assets/SOTA-2020.pdf

Comment Letter C3 *cont.*



- The 2004 Extreme Ozone Attainment Demonstration Plan;
- The 2007 Ozone Plan
- The 2007 $PM_{10}$ Maintenance Plan
- 2013 Plan for the Revoked 1-hour Ozone Standard
- 2014 RACT Demonstration for Ozone State Implementation Plan
- 2016 Moderate Area Plan for the 2012 $PM_{2.5}$ Standard
- 2016 Plan for the 2008 8-Hour Ozone Standard
- 2018 Plan for the 1997, 2006, and 2012 $PM_{2.5}$ Standards

Several of these plans, while listed on the Air District's website, are not identified or analyzed in the DPEIR. In addition, the DPEIR references the Community Emissions Reduction Plan ("CERP") for South Central Fresno which was adopted by the Air District Board in 2019, but it does include it in its analysis of the project's consistency with AQPs. Since the purpose of the CERP is to reduce air pollution exposures in disadvantaged South Fresno neighborhoods which are currently overburdened by air pollution, consistency with the CERP must be included in the DPEIR's analysis.

The DPEIR states that, "[T]he growth projections used for the approved General Plan assume that growth in population, vehicle use and other source categories will occur at historically robust rates that are consistent with the rates used to develop the SJVAPCD's attainment plans." 4.3-46. However, the DPEIR fails to support this assertion with quantified population, vehicle use, and other source category growth projections used in the applicable AQPs or the General Plan. **C3-12 cont.**

Similarly, the DPEIR states that, "Review of the goals and policies of the General Plan found them to be consistent with the applicable control measures of the SJVPACD attainment plan." 4.3-47. However, the DPEIR provides no information about the review process relied upon to substantiate this conclusion. The DPEIR contains no discussion of the primary goals and control measures contained in the applicable AQPs and how they compare to the goals and policies of the General Plan, including the General Plan land use map. Based on our review, the DPEIR contains no evidence to substantiate the conclusion that the project is consistent with the applicable AQPs. This is at odds with case law interpreting CEQA which clearly establishes that the "EIR must contain facts and analysis, not just the agency's bare conclusions or opinions. *Citizens of Goleta Valley v. Board of Supervisors* (1990) 52. Cal.3d 553, 568.

The DPEIR generally asserts that "continued implementation of the approved General Plan would allow for implementation of the City's sustainability efforts that reduce motor vehicle use and energy consumption," and that for this reason, "continued implementation of the approved General Plan" would support the implementation of the SJVAPCD's attainment plans." 4.3-46. Yet, the General Plan's designation of more than 6,000 acres of land for industrial development in South Fresno, including in unincorporated Fresno County and where residences and community-serving facilities like places of worship and corner stores currently exist, undercut this conclusion. Industrial development pursuant to the General Plan, both around and over existing communities, will inevitably result in many direct and indirect adverse air quality impacts, including as a result of induced development elsewhere as residents relocate. Without a

substantive comparison of the General Plan's goals and policies with the goals and control measures contained in the AQPs, including goals and policies which may conflict with the AQP, the DPEIR cannot demonstrate a basis for its conclusion that the General Plan is consistent with the applicable AQPs. **C3-12 cont.**

**B. The DPEIR Fails to Thoroughly and Accurately Disclose and Identify Adequate Mitigation to Minimize the Project's Criteria Air Pollutant Impacts**

While the DPEIR concludes that the Project will result in significant impacts on criteria air pollutants ("CAPs"), it fails to provide an adequate description of those impacts. The DPEIR's analysis fails to acknowledge or address conflicting information regarding criteria air pollutant emissions contained in the MEIR, fails to incorporate information about the significant impacts associated with General Plan implementation to date, and misrepresents the scope of mitigation which it claims which reduce anticipated impacts. As the Supreme Court stated in its decision in *Sierra Club v. Fresno County* (2018), "An adequate description of adverse environmental effects is necessary to inform the critical discussion of mitigation measures and project alternatives at the core of the EIR. *Sierra Club v. Fresno County* (2018) 6th Cal.5th 502, 514. **C3-13**

**1. The DPEIR's Analysis of Project-Related CAPs Fails to Provide Critical Information & Relies on Faulty Assumptions and Unsound Reasoning to Supports Its Conclusions**

The DPEIR's analysis of the impacts of criteria air pollutant that will result from the Project does not allow the public and decision-makers to understand the nature and magnitude of the CAPs that will result from the project and fails to demonstrate that its conclusions are supported by sound reasoning and evidence. The DPEIR must be revised to include an accurate and complete analysis of the project's CAPs and their impacts and to include appropriate mitigation measures to address those impacts.

First, annual emissions forecasts contained in the DPEIR are dramatically lower than the emissions forecasts contained in the 2014 General Plan MEIR for all CAPs, despite the fact that both sets of data analyze General Plan implementation. DPEIR Table 5.3-9 identifies the annual emissions levels for Reactive Organic Gases (ROG), $NO_x$, $PM_{10}$, and $PM_{2.5}$, and MEIR Table 5.3-8[8] identifies the annual emissions levels for those pollutants in the years 2020, 2035, and 2056 as follows: **C3-14**

| | DPEIR Table 4.3-8 | MEIR Table 5.3-9 | | |
|---|---|---|---|---|
| | | 2020 | 2035 | 2056 |
| **ROG** | 87.5 | 2,453 | 2,465 | 2,606 |
| **$NO_x$** | 193.5 | 6,418 | 5,952 | 6,998 |

[8] Both of these tables bear the same title, "City of Fresno Planning Area Annual Average Air Pollutant Emissions".

| | | | | |
|---|---|---|---|---|
| **$PM_{10}$** | 54.7 | 536 | 555 | 600 |
| **$PM_{2.5}$** | 16 | 294 | 312 | 357 |

The DPEIR's annual emissions estimates for ROG, $NO_x$, $PM_{10}$, and $PM_{2.5}$ are respectively 28 to 29; 30.7 to 36; 9.8 to 11; 18 to 22 times larger than the MEIR's emissions estimates for those same pollutants. The DPEIR provides no explanation for the vast discrepancy between the estimates contained in the adopted MEIR and the DPEIR, including whether they are due in part to the different baseline years used DPEIR (2019) and MEIR (2012). The DPEIR also does not explain why the figures contained in the DPEIR should be relied on and those contained in the MEIR are incorrect. **C3-14 cont.**

Second, while the DPEIR concludes that on a cumulative basis, project construction emissions would exceed SJVAPCD annual thresholds, the DPEIR finds that impacts of fugitive dust (which the DPEIR indicates contains $PM_{10}$ and $PM_{2.5}$ emissions) from construction activities are considered less than significant" despite substantial adverse fugitive dust impacts that have resulted from General Plan and Development Code implementation to date. DPEIR, 4.3-48, 49. During construction of the Amazon and Ulta Beauty distribution facilities following adoption of the General Plan on parcels designated by the General Plan Land Use Map for Heavy Industrial development, residents of properties located on East Central Avenue between Orange and Cedar Avenues experienced the ongoing accumulation of heavy layers of dust on and around their properties and automobiles. Residents were forced to keep their windows shut to reduce the infiltration of dust inside their homes. Even with such preventative measures, residents observed layers of dust accumulate inside their residences. Residents' exposure to dust in their neighborhoods, outside on their properties, and within their homes resulted in significant public health impacts by triggering allergies, asthma, and breathing difficulties. See Attachment 2, *South Central Neighbors United v. City of Fresno, et al.,* Petition for Writ of Mandate and Complaint for Injunctive Relief, p. 7, lns. 21-23. The Amazon and Ulta Beauty distribution facilities' construction demonstrate that individual development projects that occur as a result of General Plan implementation, including industrial and warehouse development near residential areas in and outside of the SIPA, have potentially significant adverse fugitive dusts impact regardless of the existence of Air District Regulation VIII and other regulations which the DPEIR cites. The DPEIR must be revised to incorporate these facts into its analysis and to revise the conclusion that construction-related fugitive dust impacts for individual projects resulting from General Plan implementation are less than significant. **C3-15**

Third, the DPEIR's analysis of construction and operational CAPs in several instances states that the application of Air District rules to individual projects resulting from General Plan implementation will reduce project emissions and that projects that exceed Air District thresholds of significance after implementing those rules will be required to implement additional mitigation measures to reduce emissions to less than significant or the City would be required to prepare an EIR. 4.3-49, 50. This statement is inaccurate though, because it fails to acknowledge that dozens of individual project types are permitted by right in the Development Code and thus will not be subject to further review and mitigation pursuant to CEQA. The City must revise the DPEIR to address the inaccuracy by clarifying which project types are and are not subject to discretionary permit approval and further environmental review. Without this **C3-16**

clarification, the DPEIR violates CEQA by overstating the degree of mitigation and misrepresenting the magnitude of the adverse impacts from criteria air emissions that will occur as a result of General Plan implementation. *Sierra Club v. County of Fresno* (2018) 6 Cal.5th 502, 514. **C3-16 cont.**

Fourth, the DPEIR uses circular reasoning to arrive at its unsubstantiated conclusion that construction emissions will not violate AQPs. The DPEIR states that "[e]missions related to projected construction activities are included in emission forecasts used to demonstrate attainment of the applicable air quality standards and would therefore, not interfere or obstruct with SJVAPCD attainment plans." 4.3-49. The DPEIR does not provide any information about any specific emissions forecasts contained any particular Air District attainment plan to show that the construction emissions which may be expected by this project are in fact accurately anticipated by the Air District attainment plans. The DPEIR also does not explain how the attainment plans could accurately account for construction emissions of projects, including plan-level projects, before they are even proposed and approved, when those projects would impact the nature and extent of future emissions. If the DPEIR's logic is accepted at face value, all construction-related criteria air emissions associated with any proposed project would be accounted for in existing AQPs and such emissions would never conflict with an AQP. This is clearly not the case. **C3-17**

Fifth, the DPEIR fails to support its conclusion that the project's stationary source emissions may be expected to be less than significant. The DPEIR's analysis references emissions from the City's top-three stationary source emitters but does not explain how those facilities' emissions are relevant to an analysis of stationary source emissions which may be expected from General Plan implementation or include any other discussion of nature or magnitude of stationary source emissions which are likely to result from General Plan implementation. To reach its conclusion that stationary source emissions are less than significant, the DPEIR 1) identifies and briefly describes Air District Rule 2201 (New and Modified Stationary Source Review), and 2) unspecified "prohibitory rules" that the Air District has adopted that "set emission limits and/or identify control technologies" and states that the "net effect of this regulatory system is continued reductions in stationary source emissions including the continued implementation of the approved General Plan." DPEIR, 4.3-52. The DPEIR does not identify a significance threshold specifically applicable to this section of its analysis. Assuming the threshold is the threshold identified in the introduction to the DPEIR's analysis of criteria air pollutant impacts, "whether the cumulative impact of development predicted by the continued implementation of the approved General Plan would conflict with plans adopted to achieve applicable standards," then the DPEIR's determination that impacts associated with stationary source criteria emissions is less than significant is based on the circular and non-sensical reasoning that the existence of Rule 2201 and other unspecified "prohibitory rules" guarantee conformity therewith as General Plan implementation occurs. Accordingly, the DPEIR lacks substantial evidence to support its determination that stationary-source criteria emissions are less than significant and must be revised. See *California Oak Federation v. Regents Univ. of California* (2010) 188 Cal.App.4th 227, 261-232 (An agency has abused its discretion under CEQA if the determination or decision is not supported by substantial evidence); CEQA Guidelines § 15384(a) (substantial evidence means "enough relevant **C3-18**

information and reasonable inferences from this information that a fair argument can be made to support a conclusion.") **C3-18 cont.**

**2. The DPEIR's Analysis of the Health Impacts Associated with the Project's CAPs Does Not Satisfy CEQA's Requirements**

The DPEIR's analysis (or lack thereof) of the connection between the project's likely CAP emissions and health impacts falls far short of the standards set by CEQA by 1) failing to acknowledge at all potential health impacts on certain vulnerable populations, and by 2) dismissing the possibility of assessing the health impacts of the project's CAPs without providing adequate justification. These failures and the DPEIR's resulting lack of mitigation to address the health impacts associated with the project's CAP emissions will disproportionately harm people of color, low-income Fresnans, the elderly and children who are most susceptible to air pollution as well as disadvantaged communities in and near the Planning Area which are designated for new industrial development.

The DPEIR's discussion in this section only refers generally to certain known health effects of ozone and particulate matter on people. *See* DPEIR, 4.3-53, 54. Section 4.3.3.5 describes individuals who are sensitive to air pollution as "children, the elderly, and persons with pre-existing respiratory or cardiovascular illness." DPEIR, 4.3-8. However, research shows lower educational attainment levels, linguistic isolation, housing-cost burden level, and poverty and a person's racial characteristic as a person of color all increase vulnerability to adverse health effects as a result of air pollution exposures. See CalEPA's Update to the California Communities Environmental Health Screening Tool, CalEnviroScreen, 3.0, January 2017, pp. 12,[9] American Lung Association, 2020 State of the Air Report, pp. 20, 21, 37, 66. **C3-19**

The DPEIR's analysis of the health impacts of CAPs anticipated by the project reaches conclusions without providing a clear rationale to justify the conclusion. For instance, the DPEIR states that project emissions would not be expected to exceed NAAQs or CAAQs for $NO_x$ or PM, because daily emissions of criteria air pollutants from the project would equal only a fraction of the County of Fresno's daily total air emissions. But the DPEIR provides no explanation of why its assessment that the share of the project's emissions as a portion of Fresno County's total emissions would be small demonstrates that the project itself will not lead to exceedances of NAAQs or CAAQs. Further, even if project emissions did not result in exceedances of NAAQs or CAAQs, those emissions may still be significant if CAP emissions significantly impact human health – a fact which the DPEIR does not acknowledge or take into account in its analysis. 14 C.C.R. §§ 15131(b) & 15382(e) (economic and social effects of a physical change may be used to determine that the physical change is a significant effect on the environment). Accordingly, the DPEIR's failure to include any discussion of the project's anticipated emissions of CAPs for which the Air District is currently in attainment, including Lead, Carbon Monoxide, and Sulfur Dioxide and the connection between those emissions and human health also renders the DPEIR deficient.

[9] Available at https://oehha.ca.gov/media/downloads/calenviroscreen/report/ces3report.pdf.

The DPEIR also states that "emissions of $NO_x$, VOCs, and ozone... have been trending downward within the SJVAB even as development has increased over the last several years. Therefore, continued implementation of the General Plan is not expected to result in any Basin-wide increase in health effects." DPEIR, 4.3-53. The DPEIR does not explain or demonstrate why the downward trend in $NO_x$, VOCs, and ozone at the same time as development, presumably across the SJVAB, has increased over the last several years means that this project will not result in *any* Basin-wide increase in health effects.

Further, the DPEIR makes no attempt to correlate the project's anticipated emissions of criteria air pollutants and human health. Rather, it claims that an analysis of the correlation between a project's anticipated criteria air pollutants on human health is not possible, relying entirely on statements contained in a 2015 Amicus Curiae brief[10] by the Air District in *Sierra Club, et al. v. Fresno County, et al.* that "currently available modeling tools are not equipped to provide a meaningful analysis of the correlation between an individual development project's air emissions and specific human health impacts." DPEIR, 4.3, 53, 54. Yet, the project studied by the DPEIR is not in fact an individual development project but rather a plan-level project encompassing all development within the General Plan Planning Area through buildout in 2056 for which the DPEIR choses to use project-level significance thresholds. The DPEIR may not use its decision to employ project-level significance thresholds for CAPs as a basis to avoid any effort to correlate the project's CAPs and human health impacts. Further, the DPEIR says only that regional modeling does not exist "to correlate health effects [of the project] on a Basin-wide level" but does not connect or explain why a connection cannot be made between the project's CAPs and human health impacts in particular locations or on vulnerable populations. DPEIR, 4.3-54. **C3-19 cont.**

The DPEIR states that the Air District indicates that it would take a "large amount" of additional emissions to result in a modeled increase in ambient ozone levels over the entire region, and that "[a]s such, it is not currently possible to accurately quantify ozone-related health impacts caused by NOX or VOC emissions from relatively small projects." DPEIR, 4.3-54. The DPEIR does not state what constitutes a "large amount" of emissions for purposes of this statement. In addition, the DPEIR does not even provide *any* information about the quantity of ozone that may be expected to result from project implementation. In recent caselaw, the Supreme Court held that inclusion of raw numbers estimating tons of ROG and $NO_x$ from a project alone do not provide meaningful information to a reader about how much ozone will be produced and whether that ozone will result in adverse health effects. *Sierra Club, et al. v. Fresno County* (2018) 6 Cal.5th 502, 520. Further, the DPEIR also does not but must discuss whether other means exist, apart from scientific models used by the Air District as of 2015, to shed light on the potential human health impact of ozone (or any CAP) based on anticipated project emissions.

---

[10] The DPEIR provides the following link for the Amicus Curiae brief: www.courts.ca.gov/documents/7-s219783-ac-san-joaquin-valley-unified-air-pollution-control-dist-041315.pdf. When used by the author of these comments on May 2, 2020, the resulting webpage displayed "Not Found."

The Air District's assertion in a legal brief in 2015 that it lacks models to assess CAP impacts from individual projects on human health does not justify the DPEIR's failure to make *any* attempt to conduct such an analysis. As the Supreme Court stated in *Sierra Club,* "technical perfection" or "scientific certainty" are not required of a DPEIR's analysis, but "adequacy, completeness, and a good-faith effort at full disclosure" is. *Sierra Club v. Fresno County* (2018) 6 Cal.5th 502, 515.

**C3-19 cont.**

Finally, the DPEIR does not acknowledge the link between air pollution and population vulnerability to coronavirus (COVID-19). The New York Times recently reported on a new nationwide study finding that coronavirus patients in areas with higher $PM_{2.5}$ levels are more likely to die from the infection than patients in areas with lower air pollution levels.[11] The DPEIR must incorporate this and other studies which bear on residents' vulnerability to illness, including mass illness and pandemics such as coronavirus , due to air pollution exposure into its analysis of project impacts and suitable mitigation measures.

**3. The DPEIR Fails to Identify Adequate Mitigation for the Project's Criteria Air Pollutants**

**C3-20**

The DPEIR identifies two mitigation measures in response to the significant impacts of project-related criteria air pollutants which the DPEIR identifies. Yet the design of those mitigation measures, Mitigation Measures Air-2.1 and Air-2.2, ensure that they will not effectively minimize CAP impacts to the extent feasible. *See* DPEIR, 4.3-55. First, these measures only apply to projects which require discretionary review. The General Plan contains explicit policies promoting streamlined project review and the Development Code implements these policies by designating numerous land uses as subject only to ministerial review. Thus, many projects that implement the General Plan will not be required to undergo further review under CEQA or to comply with Mitigation Measures Air-2.1 and 2.2. Further, these mitigation measures inappropriately defer the formulation of mitigation to future projects, though this mitigation could be identified at this time. The City must revise the DPEIR to incorporate mitigation measures which apply to all projects (not only those subject to discretionary review) that contribute to the General Plan's significant CAP emissions impacts and identify enforceable and feasible mitigation at this time. Examples of feasible and effective mitigation measures include but are not limited to:

- the re-designation of industrial land uses near residential land uses, schools, and other sensitive receptors to less intensive and community-serving uses;
- amendment of the Citywide Development Code to incorporate enhanced protections for disadvantaged communities and vulnerable populations, including adopting conditional use permit requirements for warehouse facilities and other land uses known for

[11] Lisa Friedman, "New Research Links Air Pollution to Higher Coronavirus Death Rates," New York Times, April 17, 2020, available at https://www.nytimes.com/2020/04/07/climate/air-pollution-coronavirus-covid.html; "Exposure to air pollution and COVID-19 mortality in the United States: a nationwide cross-sectional study," Xia Wu, et al., April 2020, available at https://www.medrxiv.org/content/10.1101/2020.04.05.20054502v2.full.pdf
.

significant air quality impacts; heightened standards for acceptable impact levels for permit issuance; heightened performance standards; and specific penalties and enforcement measures to reduce air quality-related violations for projects which would have air quality impacts and are located in or near disadvantaged communities;

- the adoption and resourcing of a program to conduct proactive code enforcement of air quality-related rules, regulations, and mitigation measures applicable to industrial facilities, warehouse and distribution centers, and other facilities which result in significant air emissions in disadvantaged communities;
- the creation of a program to dedicate funds for enforcement of air quality-related rules and regulations to programs within and benefiting disadvantaged communities and vulnerable populations to reduce the impacts of their exposure to air pollution; and,
- commitments to take specific actions and work proactively with the Air District to implement specific policies and measures contained in the South Fresno Community Emissions Reduction Plan.

**C3-20 cont.**

### C. Inadequate Analysis and Mitigation of Exposure of Sensitive Receptors to Substantial Pollutant Concentrations

#### 1. The DPEIR Fails to Adequately Describe the Existing Setting by Failing to Identify Sensitive Receptors

The DPEIR provides no information about the existing exposure of sensitive receptors to TACs in the Planning Area. This failure violates CEQA's fundamental requirement that EIRs include a description of the physical environmental conditions in order to "give the public and decision makers the most accurate and understandable picture practically possible of the project's likely near-term and long-term impacts." CEQA Guidelines § 15125(a). "If the description of the environmental setting 'is inaccurate, incomplete or misleading, the EIR does not comply with CEQA.'" *Cleveland National Forest Foundation v. San Diego Assn. of Governments* (2017) 17 Cal.App.5th 413. An EIR's description of the environmental setting must be contain sufficient information to "permit the significant effects of the project to be considered in the full environmental context." *Id.* § 15125(c). An accurate description of the environmental setting is critical, because the significance of an activity may vary with the setting. CEQA Guidelines, § 15064(b). A "project that is ordinarily insignificant in its impact on the environment may in a particularly sensitive environment be significant." *Kings County Farm Bureau v. City of Hanford* (1990) 221 Cal.App.3d 692, 718, 721; CEQA Guidelines, § 15300.2(a). Without an adequate description of the public's existing exposure to TACs, the PEIR cannot inform the public and decision-makers of the existing nature and scope of TACs' impacts on sensitive receptors, the significance of the impacts of the project's exposure of sensitive receptors to TACs, and appropriate mitigation measures and/or project alternatives to address the impact, and cannot fulfill its purpose of allowing the public and decision-makers to intelligently decide whether approval of the project is worth the risk.

**C3-21**

Although the DPEIR does not disclose it, incorporated and unincorporated neighborhoods in the Southern portion of the planning area are already heavily impacted by emissions from existing industrial uses, warehouse distribution centers, freeway traffic, fueling stations, and the use of local roadways for heavy diesel truck traffic. These neighborhoods

include but are not limited to neighborhoods in Southwest Fresno, South Central Fresno (including but not the Flamingo Mobile Home Park, residences along East Central Avenue and South Orange Avenue, and the community of Daleville), Calwa, the community located along Drummond and Jensen Avenues, and Southeast Fresno. These and other South Fresno neighborhoods rank among the most pollution burdened in the state according to the California Communities Environmental Health Screening Tool (CalEnviroScreen), 3.0., a tool created by the California Environmental Protection Agency to identify communities by census tract which are disproportionately burdened by and vulnerable to multiple sources of pollution.[12] See Attachment C. To rank neighborhoods across the state, CalEnviroScreen 3.0 uses population twelve pollution burden and eight population characteristic indicators. The CalEnviroScreen pollution burden indicators include the air pollution exposure indicators of ozone, $PM_{2.5}$, Diesel Particulate Matter, pesticide use, toxic releases from facilities, and traffic density.[13]

Ten of the twenty highest ranked census tracts in the state under CalEnviroScreen are located in South Fresno neighborhoods. See Attachment C. Census Tract 601900100 ranks as the most pollution-burdened census tract, encompasses portions of South Central, Southwest, and Southeast Fresno, and includes Orange Center Elementary School. In terms of air pollution exposure, Census Tract 601901100 in the 93706 zip code ranks in the 98th percentile for ozone, 97th percentile for toxic releases from facilities, 97th percentile for $PM_{2.5}$, and 95th percentile for diesel. Census Tract 6019001500, located in the 93725 zip code and which includes incorporated and unincorporated residential neighborhoods in South Central and Southeast Fresno and is listed as the third most pollution burdened neighborhood in California, ranks as the fifth most pollution burdened census tract in the state and in the 98th percentile for ozone, 98th percentile for toxic releases, 97th percentile for $PM_{2.5}$, and 95th percentile for pesticides. As another example, Census Tract 601901000 in the 93706 zip code ranks as the eighth most pollution burdened census tract in the state and in the 99th percentile for ozone and toxic releases, 97th percentile for $PM_{2.5}$, and 96th percentile for diesel and traffic. In addition to data from CalEnviroScreen, the DPEIR could easily incorporate TAC data from the U.S. EPA's National Air Toxic Assessment[14], which include data on ambient pollution concentrations, exposures, and health risks for every census tract in the U.S., to describe the environmental setting in the Planning Area and neighborhoods which are already disproportionately exposed to TACs.

**C3-21 cont.**

These same census tracts, census tracts 601901100, 6019001500, and 601901000, and other top-ranking census tracts in South Fresno, also all score among the highest in the state for the CalEnviroScreen indicators for asthma, low-birth weight, and cardiovascular disease[15] – all

[12] CalEPA's Office of Environmental Health Hazard Assessment (OEHHA)'s webpage on CalEnviroScreen, 3.0 is accessible at this link: https://oehha.ca.gov/calenviroscreen/report/calenviroscreen-30
[13] See OEHHA's CalEnviroScreen 3.0 "Pollution Indicators" webpage, accessible at https://oehha.ca.gov/calenviroscreen/pollution-indicators

[14] Excel files with the 2014 National Air Toxic Assessment (NATA) data for cancer, respiratory, neurological, liver, kidney, immunological risks and all hazard indexes by census tract are available at https://www.epa.gov/national-air-toxics-assessment/2014-nata-assessment-results#nationwide. 2002 NATA data is available at http://www.epa.gov/nata2002/methods.html.
[15] Census Tract 6019001100 ranks in the 97th percentile for asthma, the 93rd percentile for low-birth weight (LBW), and the 96th percentile for cardiovascular diseases. Census Tract 6019001000 ranks in the 98th percentile for asthma, 80th percentile for LBW, and 97th percentile for cardiovascular disease. Census Tract 6019001000 ranks in

Comment Letter C3 *cont.*



health issues to which pollutant exposure is a contributor and which render individuals' more susceptible to health impacts from pollution. See Attachment C; Update to the California Communities Environmental Health Screening Tool, CalEnviroScreen 3.0 Report, January 2017, pp. 6-7, 11, 27, 33, 60[16]. The fact is that South Fresno communities bare an extreme and disproportionate air pollution burden and experience particular vulnerability to toxic air contaminants compared to other neighborhoods in Fresno and the state, yet the DPEIR entirely fails to disclose this fact and incorporate it into its analysis and mitigation measures and to even identify the sensitive receptors which may be impacted by air pollution from industrial facilities, warehouses, truck traffic, and other facilities and activities generated by the project.

In addition, the DPEIR does not identify sensitive receptors in the Planning Area which which may be impacted by the continued implementation of the General Plan and Development Code. The DPEIR's discussion of sensitive receptors is limited to two sentences that generally describe what sensitive receptors are and the statement that, "There are many sensitive receptors throughout the city of Fresno.[17]" 4.3-8. The DPEIR makes no effort to identify any specific sensitive receptors in or around the Planning Area nor does it identify sensitive receptors which may be particularly vulnerable to existing air pollution exposures or exposures which will likely occur with implementation of the General Plan. An adequate impact analysis necessarily requires a thorough description of existing sensitive receptors (i.e., those segments of the population must susceptible to poor air quality, including children, the elderly, and those with pre-existing health problems which are impacted by air quality). The DPEIR must also identify the location of sensitive receptors in relation to areas designated for industrial and warehouse development and other land uses which may be expected to generate substantial quantities of toxic air contaminants as well as to roadways expected to experience high volumes of diesel truck traffic and car traffic as a result of General Plan and/or Development Code implementation. This is necessary to permit a complete and accurate analysis of the project's potential exposure of sensitive receptors to substantial quantities of toxic air contaminants.

**C3-21 cont.**

The DPEIR's failure to include critical information about the environmental setting in vulnerable communities also prevents the DPEIR from making accurate determinations about the significance of project-related air emissions and exposure of sensitive populations to toxic air contaminants. Without information about existing air pollution levels within vulnerable communities, health factors impacting susceptibility to adverse outcomes due to air pollution exposure in those communities, and the location of sensitive receptors, the DPEIR cannot accurately inform the public and decision-makers about the nature and magnitude of the impact of exposure of sensitive receptors to air emissions. The California Supreme Court has made clear that, "[A]n EIR's designation of a particular adverse environmental effect as 'significant'

---

the 99th percentile for asthma, the 97th percentile for LBW, and the 91st percentile for cardiovascular disease. See Attachment C.

[16] Available at https://oehha.ca.gov/media/downloads/calenviroscreen/report/ces3report.pdf.

[17] The DPEIR sub-section on "Sensitive Receptors" within Section 4.3 on Air Quality impacts reads in its entirety: "Those individuals who are sensitive to air pollution include children, the elderly, and persons with pre-existing respiratory or cardiovascular illness. The SJVAPCD considers a sensitive receptor to be a location that houses or attracts children, the elderly, people with illnesses, or others who are especially sensitive to the effects of air pollutants. Examples of sensitive receptors include hospitals, residences, convalescent facilities, and schools. There are many sensitive receptors throughout the city of Fresno." 4.3-8.

does not excuse the EIR's failure to reasonably describe the nature and magnitude of the adverse effect." *Sierra Club v. County of Fresno* (2018) 6 Cal.5th 502, 514. **C3-21 cont.**

**2. The DPEIR Fails to Adequately Describe Toxic Air Contaminants Which May Impact Sensitive Populations**

The DPEIR specifically identifies only four TACs -- benzene, butadiene, formaldehyde, and hydrogen sulfide – and provides little information about their individual health impacts. However, the California EPA identifies several dozen TACs and provides extensive documentation regarding their unique health impacts.[18] The DPEIR's cannot analyze the impacts of toxic air pollution on sensitive receptors where it has not even identified the air pollutants at issue. **C3-22**

**3. The DPEIR Fails to Acknowledge and Analyze the Air Pollution Exposure in Disadvantaged Communities Resulting from the General Plan's Industrial Land Use Designations & Fails to Analyze Exposure**

The DPEIR acknowledges that high-volume roadways, stationary diesel engines, and. "facilities attracting heavy and constant diesel vehicle traffic," including distribution centers and trucks stops, have been identified by CARB as "posing the highest risk to adjacent receptors." DPEIR, 4.3-15. The DPEIR also states that other facilities with increased risk include warehouse distribution centers and large industrial facilities and that "most diesel particulate matter," a carcinogen, "is emitted from mobile sources" including construction and agricultural equipment, truck-mounted refrigeration units, and "trucks and buses traveling on freeways and local roadways." DPEIR, 4.3-16. Despite these recognitions, the DPEIR fails to even acknowledge, let alone adequately analyze the impacts of, the project's land use and transportation policies which would concentrate industrial and warehouse distribution facilities and generate voluminous diesel truck traffic in some of the most vulnerable communities in Fresno County and the state. **C3-23**

**4. The DPEIR Fails to Make a Good-Faith Effort to Analyze Health Risks Resulting from Sensitive Populations' Exposures to TACs**

The DPEIR fails to include any meaningful analysis of potential exposure of sensitive receptors to TACs based on its assertion that it is not possible to calculate the risks, because the City cannot determine the amount of TACs that will be released. The DPEIR fails to make a good-faith effort to provide information that is available regarding potential exposures of sensitive receptors and possible health impacts given General Plan land use designations, land uses permitted within those designations and their potential TAC emissions, their proximity to sensitive receptors, and factors impacting sensitive receptor exposure in those locations. **C3-24**

[18]The California EPA's Office of Environmental Health Hazard Assessment provides a list of TACs and documents with information specific to each TAC on its website at the following link: https://oehha.ca.gov/air/general-info/toxic-air-contaminant-list-staff-reportsexecutive-summaries

The City must revise the DPEIR to correct these deficiencies and adopt adequate mitigation measures to address the exposure of sensitive populations to air pollution as identified in the revised DPEIR. **C3-24 cont.**

## VIII. The DPEIR Fails to Satisfy CEQA's Requirements Relating to the Analysis and Mitigation of Significant Energy Impacts

### A. The DPEIR's Restriction of the Study Area for Energy Impacts to the Planning Area Results Artificially Excludes Analysis of the Project's Energy Impacts

The DPEIR's description of the Project Area for energy impacts is the City of Fresno Planning Area. 4.6-2. However, this Project Area artificially excludes analysis of project impacts from certain phases and components of the Project, including transportation-related and operational energy impacts which extend beyond the Planning Area. For example, the project designates land for industrial development and warehouse distribution centers in South Fresno. Distribution facilities may be expected to vehicle miles travelled from trucks that travel to and from facilities along Highway 99 and other high-volume freeways and roadways. These truck trips will require fuel throughout their journeys and will therefor impact energy usage well beyond the Planning Area. **C3-25**

With respect to operations resulting from the project, the General Plan plans for extensive industrial and warehouse distribution center development in close proximity to residential areas located just outside of the Planning Area. One example is the disadvantaged unincorporated community of Malaga, which is located less than a quarter-mile to the East of the Planning Area. The development and operation of industrial and warehouse distribution facilities on land that is currently vacant or used for farming may be expected to result in ambient temperature increases for nearby land uses, including existing residential, commercial, and public facilities just outside of the Planning Area.

The City must revise and broaden the DPEIR's Study Area for energy impacts so that the energy impacts associated with all phases of project implementation are included in the impact analysis. 14 C.C.R. § 1516.2(b) (EIR's analysis must include the project's energy use for all project phases and components, including transportation-related energy, during construction and operation); CEQA Guidelines Appendix F.

### B. The Description of the Project Setting Fails to Identify Diesel Fuel and Renewable Energy Supplies and Use Patterns in the Planning Area

An EIR's description of the environmental setting must include existing energy supplies and energy use patterns in order to permit a complete and accurate assessment of the project's energy impacts. See CEQA Guidelines Appendix F(II)(B). **C3-26**

The DPEIR's environmental setting discussion's contains just one reference to renewable energy sources -- a statement of the percentage that renewable sources comprise among all energy sources generated in California. The DPEIR's environmental setting discussion includes

no information whatsoever about existing renewable energy supplies and energy use patterns in Fresno. The DPEIR must be revised to include information about supplies and usage of wind, solar, hydrogen and other renewable sources.

The DPEIR's brief discussion of existing fuel usage focuses on the gasoline usage for light-duty vehicles. The DPEIR provides an estimate of diesel usage from trips in Fresno County in 2018 but does not state anything about the bases for that usage or provide any information about diesel and gasoline usage for trips that extend beyond Fresno County. Fresno's location in the heart of inland California hundreds of miles from California's heavily-populated coastal cities and ports and the significance of warehouse distribution centers, agricultural processing, and other industries that rely on shipping and transportation means that the DPEIR's environmental setting discussion must provide a description of the patterns of diesel-energy usage from truck traffic to and from Fresno, including both trips within and beyond Fresno County. **C3-26 cont.**

**C. The DPEIR Fails to Include Information Necessary to Describe the Project and Support its Conclusions That The Project Will Not Have Significant Energy Impacts**

CEQA requires that an EIR's analysis include "the project's energy use for all project phases and components, including transportation-related energy, during construction and operation." 14 C.C.R. § 1516.2(b). The analysis should consider not only building code compliance, but also other relevant factors such as "the project's size, location, orientation, equipment use and any renewable energy features that could be incorporated into the project." CEQA Guidelines Appendix F describes five topics that an EIR's project description and five topics which an EIR's energy impacts analysis must include where relevant. Appendix F(II)(A)(1-5) & (II)(C)(1-5). The DPEIR fails to describe and analyze several aspects of the project's energy usage which are both relevant to the project and identified in Appendix F as important components of an EIR's energy impact analysis. The DPEIR further fails to support its findings that the project's energy-related impacts are less than significant with facts and clear analysis. **C3-27**

**1. The DPEIR Fails to Describe Construction-Related Energy Impacts or Support Its Conclusion That Such Impacts Are Less Than Significant Without Mitigation**

The DPEIR concludes that "[p]otential construction impacts would be less than significant, and no mitigation is required." The DPEIR arrives at this conclusion based on only two sentences of analysis that respectively state: **C3-28**

> "Energy would be required during construction for the transportation of building materials, manufacturing of building materials, and the actual construction of buildings and infrastructure." DPEIR, 4.6-29, and;
>
> "Energy use during construction of future development facilitated by the approved General Plan would primarily involve gasoline and diesel fuel and would represent a short-term use of readily available resources." DPEIR, 4.6-30.

Other than a general assertion regarding the primary construction-related fuel sources, this analysis contains no information about the project's construction-related energy use requirements. The DPEIR does not provide any information about the amount of energy from different sources that may be expected to be used; the energy consuming equipment and processes; or the energy intensiveness of materials and equipment that may be expected for construction-related activities, as required by Appendix F. The DPEIR provides no factual basis for its conclusion that construction-related energy use would be derived from "readily available resources" nor does this conclusion support a finding that the project avoids the "inefficient, wasteful, and unecessary consumption of energy" from construction-related activities. **C3-28 cont.**

The project plans for thousands of acres of new residential, commercial, and industrial development and the DPEIR contains no discussion of any policies or implementation measures included in the General Plan that would reduce energy consumption associated with construction. Therefore, it is likely that, without mitigation, the project will have significant energy-related construction impacts which require the identification and adoption of mitigation measures to avoid and reduce those impacts.

**2. The DPEIR Fails to Support Its Conclusion That Project Operational Energy Impacts Are Less Than Significant Without Mitigation**

The DPEIR states that project operational energy demand "includes natural gas and electricity" and indicates that the project's operational energy requirements and use efficiencies by amount and fuel type are less than significant.[19] The DPEIR's conclusion is unfounded and its analysis fails to include the components required by CEQA. The DPEIR does not provide any information about the energy consuming equipment or processes which may be used or the energy intensiveness of activities which may occur during operation of buildings and facilities developed as a result of General Plan implementation. See Appendix F(II)(A)(1) & (II)(C)(1). The DPEIR also makes no effort to quantify the project's potential energy impacts or to explain why that is not possible. *See Ukiah Citizens for Safety First v. City of Ukiah* (2016) 248 Cal.App.4th 256. Without adequate information about the project's operational energy impacts, the DPEIR provides no factual basis for its finding that those impacts are less than significant. **C3-29**

In addition, the factors that the DPEIR relies on to support its conclusion that the project's operational energy impacts are less than significant and do not require mitigation do not in fact demonstrate that the project will not result in wasteful, inefficient, or unnecessary consumption of energy and that the project's energy impacts are less than significant. The General Plan policies which the DPEIR's analysis of the project's operational energy impacts cites – Policies RC-8-a through k and Policy HC-3-d – contain no clear or enforceable requirements or commitments that ensure the reduction or avoidance of unnecessary energy consumption. DPEIR, 4.6-30, 33. Rather, those policies use discretionary and vague terms and descriptions without guarantees, enforcement mechanisms or timelines to ensure implementation. In most cases, the policies fail to identify specific actions to be taken and lack

[19] The DPEIR actually states that "continued implementation of the approved General Plan is consistent with this item," referring to a paraphrased statement the impact category contained in Appendix F, Section II(C)(1). We assume that by "consistent with" the authors of the DPEIR mean that the impact in this category is less than significant. DPEIR, 4.6-30.

quantified targets relating to the amount of energy to be saved. For example, Policy RC-8-b calls on the City to "*[s]trive* to reduce per capita residential electricity consumption," Policy RC-8-c directs the City to "*[c]onsider* providing an incentive program for new buildings that exceed California Energy Code requirements," and Policy RC-8-I states, "[a]dopt and implement a program to increase the use of renewable energy to meet a *given percentage* of the city's peak electrical load in a *given timeframe*." Italics added. Policy HC-3-d in turn states, "[p]rovide *appropriate* incentives for affordable housing providers, agencies, non-profit, and market-rate developers to use LEED and CalGreen Tier 1 or Tier 2 standards." DPEIR, 4.3-34. Policy HC-3-d includes a commentary that "The City will publicize the health, environmental, and long term economic and maintenance benefits of applying LEED, CalGreen [or] third party equivalents to projects in Fresno." These and the other policies cited by the DPEIR do not demonstrate that any reduction in project energy emissions will occur compared to emissions levels that would occur without those policies nor do they show that the project's energy impacts will be less than significant and that mitigation is not required.

The DPEIR's basis its conclusion that the project's operational impacts would be less than significant in part on its assertion that "potential improvements" to energy and natural gas "facilities" for future projects which have not yet been proposed would be identified at the time such projects are considered. 4.6-31. The use of the term "facilities" in this sentence is unclear, and we assume it refers to all use of energy and natural gas in future projects which have yet to be proposed. That said, the DPEIR provides no information about the nature or impact of such improvements as they relate to project operational energy usage nor does it provide a factual basis for this assertion. An EIR must contain facts and analysis, not just an agency's bare conclusions or opinions. *Sierra Club v. County of Fresno* (2018) 6C5th 502, 522. As such, the DPEIR's conclusion that future projects that result from General Plan implementation will reflect unidentified "potential improvements" to energy usage does not support the DPEIR's finding that project operational energy impacts are less than significant. **C3-29 cont.**

The also DPEIR states that projects that occur as a result of General Plan implementation will be required to meet or California Energy Code building efficiency standards and the CalGreen Code as a reason why project energy impacts will be less than significant. Yet a requirement that a project comply with the Building Code does not, by itself, constitute an adequate assessment of mitigation measures that can be taken to address the energy impacts that occurring during construction and operation of a project. *California Clean Energy Committee v. City of Woodland* (2014) 225 Cal.App.4th 173. Likewise, a statement that a project will be required to comply with Energy Code requirements does not in itself mean that project impacts are less than significant. And in this case, the DPEIR does not provide support for its assertion that future projects will be required to comply with the Energy Code by referring to any policies or mitigation measures that contain this requirement and describing how and at what stage the City will ensure the implementation of such requirement. Future projects that qualify for "by right" under the City's Development Code will not be required to undergo further environmental review under CEQA and will not be subject to additional mitigation measures to require compliance with Energy Code building efficiency standards.

**D. The DPEIR Fails to Acknowledge or Mitigate Significant Indirect Energy-Related Impacts Resulting from New Construction** **C3-30**

As mentioned in this section above, the project stands to significantly increase energy demand within existing residential, commercial, mixed-use and public facilities buildings due to the construction of structures on parcels that are currently vacant or are used for agriculture. New development, and in particular, the construction of large concrete distribution facilities in the Southern portion of the planning area, will, without mitigation, radiate heat into surrounding areas and increases ambient air temperatures and contribute to higher temperatures during the evenings. The increase in air temperatures means that air conditioning units in nearby structures used by people will need to consume more energy in order to cool the structures to desired temperatures. Since temperatures in Fresno routinely reach highs of well over 100 degrees in the summer, energy demand relating to air conditioners is already high in the Planning Area compared to other parts of the state and further increases in energy demand are likely to be significant. Given this and the fact that the General Plan plans for approximately 6,000 acres of industrial and warehouse development in and surrounding South Fresno neighborhoods that are occupied by thousands of residents and are home to schools, utility districts, commercial, and employment centers, the project's impact on increased energy usage due to AC units will likely be significant. **C3-30 cont.**

**E. The DPEIR's Analysis of the Project's Transportation-Related Energy Impacts is Inadequate**

CEQA Guidelines Appendix F requires that an EIR's energy impact analysis include the "project's energy requirements and its energy use efficiencies by amount and fuel type for each stage of the project," as well as the project's "project transportation energy use requirements and its overall use of efficient transportation alternatives." Appendix F(II)(C)(1)&(6). The DPEIR however makes no attempt to meet these requirements. Instead, it shirks its responsibility to do so, stating that "[t]he project would result in energy usage associated with gasoline to fuel project-related trips (i.e., the use of motor vehicles). When evaluating a long-range planning project, forecasting future travel methods and gasoline use is too speculative and not appropriate or feasible." DPEIR, 4.6-33. The DPEIR provides no explanation for why any assessment of future travel methods and/or gasoline use is too speculative and not feasible or why the DPEIR cannot otherwise comply with the energy impacts analysis requirements set forth in Appendix F. This failure violates CEQA. See *Berkeley Keep Jets Over the Bay Comm. v. Board of Port Comm'rs* (2001) 91 CA.4th 1344, 1370. **C3-31**

The project-related VMT forecasts the DPEIR provides have limited value in assisting the reader in understanding the nature and the significance of the Project's transportation-related impacts. In support of its conclusion that the project will not result in wasteful, inefficient, or unnecessary use of energy, the DPEIR states:

> "Although the measures of VMT in per capita terms increase from existing conditions with the City's General Plan Update, the city's VMT is below that of the regional average and the propose project would not result in a significant impact on gasoline demand."

The fact that the DPEIR's forecasts show average VMT per capita in the City of Fresno as less than the average VMT per capita for Fresno County does not support the conclusion that

project implementation would not result in the wasteful use of energy. The City and County of Fresno have distinct residential and employment land use patterns and transportation options available to residents and workers. For instance, many residents in rural Fresno employed in the agricultural sector must travel significant distances each day to and from work on farms which are widely dispersed across the region as well as to meet their everyday household needs, as many rural communities, including disadvantaged unincorporated communities, lack grocery stores, health clinics, libraries, and other locations to obtain essential goods and services. Residents in the City of Fresno may on average need to drive significantly shorter distances in order to reach their place of employment and/or obtain essential goods and services. In addition, the limited operations of Fresno County's Rural Transit Service, which reach many communities once or twice a day, makes using public transit infeasible for many residents, whereas residents in the City of Fresno have greater access to more frequent service to meet their mobility needs. Therefore, whether a given VMT level may be indicate "efficient" energy usage differs based on context and comparison of the City and County of Fresno's average VMT levels does not provide useful guidance to assess the project's energy impacts.

The DPEIR's general discussion of the General Plan's support for active transportation also does not demonstrate that the project will not result in the wasteful or unnecessary consumption of energy. The discussion only mentions one specific policy, Policy RC-8-j, which provides that the City will "[s]upport the development of a network of integrated charging and alternate fuel stations for both public and private vehicles, and *if feasible*, open up municipal stations to the public as part of network development." DPEIR, 4.6-12, italics added. Like other policies that the DPEIR relies on to support its findings that impacts will be less than significant, Policy RC-8-j provides no details about what "support" the city will provide for the charging network; when that support will be provided; any specifics about the extent of that network or the nature of charging infrastructure, including whether the network will serve trucks as well as passenger vehicles; and how the City will determine whether to open municipal stations to the public as part of the network. The DPEIR's general description of the General Plan's support for alternative transportation apart from motor vehicles also lacks the specificity to show that General Plan implementation will not result in energy waste. This general description also does not address if and how general plan policies ensure efficient transportation-related energy use for truck and car trips associated with industrial development in South Fresno.

**C3-31 cont.**

And, as discussed above, while Table 4.16-2 includes forecasts for total employment VMT, the DPEIR does not state whether this figure includes VMT resulting from truck and car trips made by employees during the course of work (rather than just commute trips); truck trips made to and from commercial and industrial facilities, such as warehouse distribution centers and agricultural processing facilities, by individuals who do not reside in and/or are not employed within the Planning Area; and VMT portions of truck and car trips that extend outside of Fresno. DPEIR, 4.6-33.

The DPEIR also makes no attempt to discuss transportation energy use requirements that may be expected (for instance, projections relating to project-related VMT attributable to cars, trucks, and/or public transit and their respective projected energy requirements) nor does it discuss the use of "efficient transportation alternatives." Efficient transportation alternatives relevant to General Plan implementation that should be discussed include the extent to which

clean energy vehicles, such as electric or hydrogen fuel cell vehicles may be utilized as opposed to vehicles reliant upon diesel or gasoline.

In addition, the DPEIR's discussion of the project's energy impacts, as well as its discussion of the environmental setting, completely omits any discussion of impacts associated with the use of freight. As the DPEIR notes elsewhere, both the Union Pacific and BNSF rail lines in Fresno carry freight traffic, with the Union Pacific line carrying exclusively freight. 4.13-8. The U.S. Department of Transportation's Bureau of Transportation indicates that rail freight service was responsible for the consumption of 507 trillion BTU of distillate/diesel fuel nation-wide.[20] The DPEIR must disclose the project's anticipated impacts on the use of freight, in addition to underlying energy demand associated with freight in Fresno. The presence of two freight-carrying rail lines and a BNSF intermodal hub center in Fresno and the General Plan's dedication of extensive land for industrial development, including agricultural processing and warehouse distribution uses, indicate that the project's freight-related energy impacts are potentially significant.

**C3-31 cont.**

The City must revise the DPEIR to accurately and completely describe the project's likely energy impacts and must provide factual bases justifying its conclusions regarding the energy impact significance levels. Given the regional scope and multi-decade nature of this project; the extensive development it contemplates; and the lack of clear and enforceable requirements that will ensure the reduction and avoidance of unnecessary and wasteful energy usage, the project will likely result in significant energy impacts which require mitigation. Pub. Res. Code § 21100(b)(3); 14 C.C.R. § 1516.2(b) ("If analysis of the project's energy use reveals that the project may result in significant environmental effects due to wasteful, inefficient, or unnecessary use of energy, or wasteful use of energy resources, the EIR shall mitigate that energy use"). Mitigation measures identified must comply with the specific mitigation requirements set forth in Public Resources Code Section 21000(b)(3), CEQA Guidelines Section 15126.4(a)(1), and Appendix F(II)(D)(1-5). *See also People v. County of Kern* (1976) 62 CA.3d 761, 774 (finding an EIR deficient that failed to include a detailed statement setting forth the mitigation measures proposed to reduce wasteful, inefficient, and unnecessary consumption of energy as required by section 21100(c) and CEQA Guidelines section 15143).

**IX. The DPEIR Fails to Acknowledge the Project's Significant Land Use Impacts Resulting from the General Plan's Division of Established Communities**

This DPEIR's analysis of the General Plan's potential to result in the division of established communities fails to include relevant information about the likely nature and extent of such impacts, and the DPEIR fails to acknowledge the significance of these impacts on established communities, including in particular rural and fringe communities located just outside of existing City limits and on the outskirts of the Planning Area as well as certain neighborhoods within existing City limits. The DPEIR's brief analysis of this impact category states that "future development could create established communities within rural communities

**C3-32**

[20]See Bureau of Transportation Statistics, Energy Consumption by Mode of Transportation, Table 4-6, available at https://www.bts.gov/content/energy-consumption-mode-transportation

that are located in the outer areas of the Planning Area," and that "[i]t is anticipated that as future development in accordance with the approved General Plan expands within the rural areas, there could be continuing conflicts between existing and new land uses, which could create a division of existing rural communities." DPEIR, 4.11-28. The DPEIR then goes on to state that objectives and policies contained within the General Plan would "lessen the impact of dividing established communities by increasing or maintaining connectivity to the surrounding area." *Id.* This analysis does not acknowledge that in addition to new residential development in and around existing rural communities, the General Plan also plans for extensive industrial development within and around existing neighborhoods and communities. The General Plan Land Use Map designates areas surrounding and up to existing residential land uses for industrial development and also designates land with existing residential uses and even entire established communities for industrial development. Residential neighborhoods and communities designated for industrial development include but are not limited to the following:

- the community of Daleville
- the community bounded by East Central, South Orange, and East Cedar Avenues
- the portion of the community of Calwa located to the South of East Jensen Avenue
- the community bounded by South Peach Avenue on the East and East Jensen Avenue on the North
- the community bounded by South Rose, East Kaviland, and East Grove Avenue
- a mobile home park located in the Jane Addams neighborhood of the City of Fresno

**C3-32 cont.**

The General Plan's designation of these and other communities for industrial land uses is explicitly a policy designed to divide established residential communities and eliminate and replace those communities with industrial development. In addition, the designation of homes and other community-serving land uses for industrial development is likely to impair effected property owners' ability to successfully obtain credit for home maintenance, to obtain permits to make improvements on their property, and to sell their property to others' for residential or other community-oriented uses. The DPEIR's designation of entire residential neighborhoods for industrial land use necessitates a finding by the DPEIR that the project will result in a significant impact as a result of the division of existing communities. The DPEIR must also acknowledge the severe nature and magnitude of the impact that the division and elimination of multiple entire communities through incremental development constitutes.

In addition, the DPEIR must disclose the project's the potential for the division of existing communities as a result of industrial land use designations and General Plan policies supporting investment in shovel ready development opportunities and permit streamlining for "employment" land uses. *See e.g.,* General Plan, Ch. 2-3, 22 (Policies ED-1-e & j), 24 (ED-3-b), 27 (ED-5-c). By facilitating and promoting intensive industrial development and the truck and car traffic that those uses generate adjacent and near to residential communities, the General Plan adversely impacts the experience of occupants of existing housing and community-serving land uses (e.g., schools, places of worship, corner stores) in those areas and undermines the short and long-term viability of housing. Since the General Plan's adoption, the City has adopted Official Plan Lines for East Central Avenue that provide for encroachment by the City into residential property in order to allow road widening to occur to facilitate heavy truck and car traffic generated by the new industrial and warehouse development planned for by the General Plan.

Road widening that allows traffic closer to homes and diminishes lot size is a foreseeable impact of the General Plan that further promotes the division of existing communities by undermining the viability of housing due to impacts on housing quality associated with nearby heavy truck and car traffic and incentivizing residents to sell or abandon their homes to seek more suitable housing. The City must revise the DPEIR to disclose, analyze and avoid the significant impact.

With respect to the General Plan objectives and policies which the DPEIR lists as evidence that project impacts associated with the division of existing communities will not be significant, the DPEIR provides no analysis of those objectives and policies to explain why they support that conclusion. The DPEIR simply states that they would "reduce the potential to physically divide an established community to a less than significant level" and that "[n]o mitigation is required." DPEIR, 4.11-28. These policies appear to do nothing to reduce the likelihood that the General Plan's industrial land use designations and policies will result in the division and replacement of existing communities with industrial land uses. For example, Objective UF-8 states, "Develop each of Downtown's neighborhoods and districts, according to its unique character,"; Policy UF-12-a provides, "[d]esign land uses and integrate development site plans along BRT corridors, with transit-oriented development that supports transit ridership"[21]; and Policy UF-12-g directs the City to establish design standards for mixed-used activity centers (none of which are located within the areas designated purely for industrial development listed in this section above). Policy LU-1-b calls for the creation of "appropriate transitions or buffers between new development with existing uses," yet the General Plan Land Use Map, as explained above, provide for *no* buffers or transition zones between areas designated for heavy industrial land use and existing residential and community-serving land uses. And as explained above in this this letter, the Development Code also lacks standards to create buffers and ensure that existing residential neighborhoods are protected from new industrial and warehouse development. Thus, the DPEIR fails to support its conclusion that General Plan impacts stemming from the division of existing communities are less than significant and the General Plan itself demonstrates unequivocally that those impacts are significant and require mitigation. The City must revise and recirculate the DPEIR to correct this failing. **C3-32 cont.**

**<u>X. The DPEIR's Analysis of Project Impacts to Population and Housing is Deficient, Because it Fails to Acknowledge the Project's Potential to Displace Substantial Numbers of People</u>**

The DPEIR's analysis of the Project's potential to displace existing people or housing fails to acknowledge or discuss the potential for displacement associated with industrial development planned for by the project and fails to provide facts to support its assertions that General Plan policies will mitigate any displacement impacts to less than significant levels. DPEIR, 4.14-14, 15. As discussed in this letter above, the General Plan designates entire residential communities (both within and outside of current City limits) and land up to and surrounding housing for industrial development. As a result of the designation of residential uses **C3-33**

[21] None of the residential communities listed in this letter as designated by the General Plan for industrial development are located along a designated BRT corridor.

for industrial development, the project itself anticipates the conversion of hundreds of units of housing to industrial land uses. And, also as discussed above in this letter, the designation of land adjacent to housing for industrial uses and the use of local roadways where housing is located for heavy truck and car traffic serving those industrial uses will contribute to the significant deterioration of housing quality and the relocation of neighborhood residents to more suitable housing. The elimination of housing stock and the relocation of residents from neighborhoods designated for industrial development will put pressure on the housing supply. These housing supply impacts may be expected to occur not only in the City of Fresno but also elsewhere in Fresno County and beyond, given that most of the housing stock impacted by the General Plan's industrial land use designations are located outside of City limits and near the edge of the Planning Area and residents who relocate will not necessarily move to an area within the Planning Area. Notably, the Study Area that the DPEIR adopts for this analysis – the Planning Area – fails to allow for the consideration of the impacts of that displacement outside of the Planning in Area in Fresno County and beyond. *See* DPEIR, 4.14-2.

The DPEIR dismisses the project's potential displacement impacts by stating that the General Plan implementation "would also result in the development of a net increase in units when compared to the existing inventory" and that the housing units available as replacement units for those that could be removed as a result of General Plan implementation would be increased. DPEIR, 4.14-15, 15. However, the DPEIR fails to state how many units may be expected to be developed with General Plan implementation and how this compares to the number of units which may be lost due to displacement coupled with the demand for housing among existing and future residents. In addition, the DPEIR says nothing of the expected price levels of new housing development and how that compares to price levels which residents who may be displaced may be able to afford. According to the City of Fresno's 2019 and 2018 Housing Element Annual Progress Reports, new residential development in the City of Fresno has primarily served above-moderate income households. On the other hand, South Fresno neighborhoods which the General Plan designates for heavy industrial development have high poverty rates, meaning that many residents in these neighborhoods are unlikely to be able to afford new residential development that occurs as a result of General Plan implementation. **C3-33 cont.**

In addition, the DPEIR's statement that a relocation analysis would be required to be prepared "[p]rior to any displacement" is inaccurate and misleading. First, a displacement study will not be required prior to relocation of residents who move to avoid the impacts of new industrial development and roadway expansion or for residents who chose to sell their homes to a buyer that develops the land for industrial uses. Second, pursuant to General Plan policies promoting permit streamlining for "employment" land uses, much new industrial development occurs by right under the Development Code and is not subject to CEQA or a displacement analysis that the law might otherwise trigger. **C3-34**

Finally, the DPEIR also states that several Housing Element policies and objectives would "reduce housing impacts," and "avoid the need for construction of replacement housing due to the development of a net increase of new housing units" and that therefore "[n]o mitigation would be required." DPEIR, 4.14-15. This analysis fails to contain facts necessary to support its conclusion. First, the DPEIR does not make the connection between the housing element policies to which it cites and the conclusion that the General Plan's displacement **C3-35**

impacts would be reduced to less than significant levels such that mitigation would not be required. The DPEIR does not explain or demonstrate (1) how or why the specific policies cited would lead to an actual reduction in impacts, (2) the nature and scope of the reduction in housing impacts which may be expected to occur and/or the nature and number of new housing units which may be developed, or (3) how the DPEIR determined that the reduction in housing impacts and/or the development of new units as a result of the housing element objectives and policies would reduce housing and population displacement impacts to a less than significant level. The analysis also does not explain why implementation of housing element policy and objectives in and of themselves will reduce potential displacement impacts to less than significant levels, taking into consideration existing lower-income housing needs in Fresno, which include the need for more than 15,000 units for lower-income households; increasing employee to housing ratios identified by the DPEIR, and the very low levels of lower-income housing production compared to the need that has occurred as a result of Housing Element implementation to date. DPEIR, 4.14-3, 7 (identifying the City's current lower-income RHNA of 8,955 units and the City's carry-over RHNA of 6,476 units); **C3-35 cont.**

The City must revise the DPEIR to accurately and completely acknowledge and disclose the project's potential to displace substantial numbers of existing people and units of housing in existing residential neighborhoods that are planned for industrial development. Given the apparent significance of these impacts, the revised DPEIR must include feasible and enforceable mitigation measures to reduce and avoid these impacts.

## XII. The DPEIR Fails to Disclose & Identify Adequate Mitigation to Minimize the Project's Groundwater Impacts

### A. The DPEIR Fails to Disclose or Adopt Adequate Mitigation to Minimize the Project's Groundwater Supply Impacts on Neighborhoods Reliant on Well Water

The Planning Area is located in the Kings Groundwater Subbasin which is designated by the State Water Resources Control Department as a "critically over-drafted high priority basin." North Fork Kings Groundwater Sustainability Agency "Groundwater Sustainability Plan in Compliance with the Sustainable Groundwater Management Act," (2019), p. 1-1&2.[22] The subbasin was given its high-priority status as a result of the removal of millions of acre-feet of groundwater from subsurface storage as a result of groundwater pumping exceeding recharge. *Id.*, p. 1-2. The DPEIR acknowledges that "the City is creating an overdraft of the Kings Groundwater Subbasin." 4.10-21. The adopted 2019 Groundwater Sustainability Plan (GSP) for the Kings Subbasin notes that the "trend of groundwater overdraft was accelerated in recent years by increased groundwater pumping as a result of significantly reduced surface water deliveries" during the drought from 2012 and 2016. *Id.* Given this reality, one would expect the DPEIR to include a thorough discussion of the project's potentially significant impacts on groundwater and propose robust mitigation measures to reduce groundwater impacts however feasible. This is not the case. **C3-36**

[22] Available at http://northforkkings.org/webpages/wp-content/uploads/2020/01/NFKGSA_GSP_Final_Adopted.pdf

First, the DPEIR contains no discussion about the current groundwater availability for residential communities and households which rely on domestic wells for their everyday water needs and the project's potential groundwater impacts on these communities and households. The DPEIR provides some data from City wells about groundwater level decline rates since 1990 in certain areas within the City that range from .5 to three feet per year. 4.10-3. This data does not include unincorporated areas within the Planning Area and the DPEIR does not indicate the range of years which the data represents and how reflective the decline rates are of recent trends. Between 2012 and 2016, numerous households and entire neighborhoods located in unincorporated County in the Southcentral and Southwestern portions of the Planning Area lost access to water in their homes as their wells ran dry. These households were forced to buy bottled water, rely on emergency connections to neighbors, seek emergency assistance such as the installation of water tanks from the state and non-profit organizations like Self-Help Enterprises, and in the case of households with the financial resources to do so, spend thousands of dollars to drill deeper wells. The DPEIR asserts that the City's continued participation in the North Kings Groundwater Sustainability Agency (GSA) and compliance with the Subbasin GSP will result in balanced water demand by 2040. 4.10-21, 22. Yet a balanced water demand in 2040 does not address significant impacts on households and communities impacted by groundwater depletion that occur within the next twenty years. For homes with shallow domestic wells, reductions in groundwater levels by just a few feet can mean the difference between flowing and dry taps. A potentially balanced water demand in 20 years will not alleviate the significant impact that occurs should households lose access to water supply in the present. **C3-36 cont.**

The South Fresno neighborhoods reliant upon domestic groundwater are disproportionately lower-income and disproportionately comprised of people of color, immigrants, and people who speak languages other than English compared to other parts of the Planning Area. The DPEIR's failure to disclose, analyze, and adopt feasible and enforceable mitigation measures to address the project's potentially significant impacts on groundwater supply in households that rely on domestic wells disproportionately adversely impacts protected classes and potentially violates civil rights and fair housing laws. **C3-37**

Second, while the GSP recognizes that recent severe and prolonged drought accelerated groundwater pumping in the Kings Subbasin, the DPEIR does not mention this in its discussion of the environmental setting nor does it disclose or discuss the likelihood of future drought conditions, water supply reductions, and increased groundwater demand that will occur as a result of climate change.[23] Without information relating to the impacts of climate change on groundwater supply between the present and the potential attainment of balanced water demand in 2040, the DPEIR fails to accurately inform decision-makers of the nature and magnitude of the project's significant impacts on groundwater supplies in the Kings Subbasin and the Planning Area as a whole and on domestic well users who are the most vulnerable to groundwater depletion. **C3-38**

[23] See Michael E. Mann & Peter H. Gleick, "Commentary: Climate change and California drought in the 21st century," March 31, 2015, discussing study results showing that the climate change is influencing the frequency, magnitude, and duration of drought in California and that the co-occurrence of dry years with warm years raises the risk of drought. Published on the Proceedings of the National Academy of Science of the United States of America's website and available at https://www.pnas.org/content/112/13/3858

Third, the DPEIR's calculations of the amount of water that will be available to the City of Fresno as buildout occurs do not appear to take into account groundwater depletion that occurs outside of City limits. The GSP does not contain measures to limit groundwater pumping and pumping that occurs outside of City limits may negatively impact subsurface inflow from neighboring areas and recharge supplies. The DPEIR relies on estimates of subsurface inflow and recharge supplies for its calculations of the water supply available to the City and the amount of groundwater that may be necessary. The DPEIR's failure to account for groundwater pumping outside of City limits therefore has the result of potentially inflating the DPEIR's calculation of available water supplies and understating future groundwater demand in the Planning Area. These calculation errors would artificially lessen the apparent significance of the project's impacts on groundwater supplies. The City must revise the DPEIR to its calculations with respect to groundwater pumping outside of City limits and its effects on subsurface inflow and recharge supplies and correct the DPEIR's calculations and analysis if they failed to account for the pumping. **C3-38 cont.**

Fourth and finally, the one mitigation measure that the DPEIR proposes, Mitigation Measure HYHD-2.1, will not minimize the project's impact on groundwater supplies and will not address impacts to households on domestic wells over the next twenty years. The measure provides only that the City will "continue to be an active participant in the North Fork Kings [GSA] and the implementation of the North Fork Kings [GSP]..." The commitment for the City to be an "active participant" in the GSA and GSP implementation is undefined and lacks clear actions that the City will take that will actually reduce groundwater supply depletion. Numerous feasible and effective mitigation options to minimize this impsact exist, including commitments by the City to decrease groundwater pumping, switch to other sources of water, and ensure the City does not exceed the amount it can consume within the GSA boundaries while not depleting supplies (as it is currently doing). The DPEIR must consider each of these mitigation options and incorporate them as enforceable mitigation measures which specify the actions that the City will take to ensure that the project's groundwater impacts are minimized. Pub. Res. Code §§ 21002.1(a), 21100(b)(2), 21081.6(b); 14 C.C.R. 15126.4.(a)(2). Further, the DPEIR also must identify specific mitigation measures to minimize groundwater supply depletion impacts on households on domestic wells. Such measures may include but are not limited to the following: **C3-39**

- a commitment to work proactively to facilitate the connection by such households to City water supplies, including by seeking and offering financial assistance and waiving and/or reducing fees to make it financially feasible for lower-income households to connect;
- the incorporation of households on domestic wells into City planning for infrastructure extension projects serving new development and/or requirements that new development which will contribute to the City's overall water demand pay a fee to support the connection of households on domestic wells.

* * * * *

Comment Letter C3 *cont.*



Thank you for your consideration of our comments. If you would like to find a time to discuss them, please contact me at awerner@leadershipcounsel.org. We look forward to working with the City to ensure its adoption of a Final Programmatic Environmental Impact Report which complies with CEQA and other applicable legal mandates and advances the legislature's goal of ensuring access to a quality environment and decent home for all Californians. **C3-40**

Sincerely

Werner

Ashle
Senior Attorney

# South Central Specific Plan - Community Revision

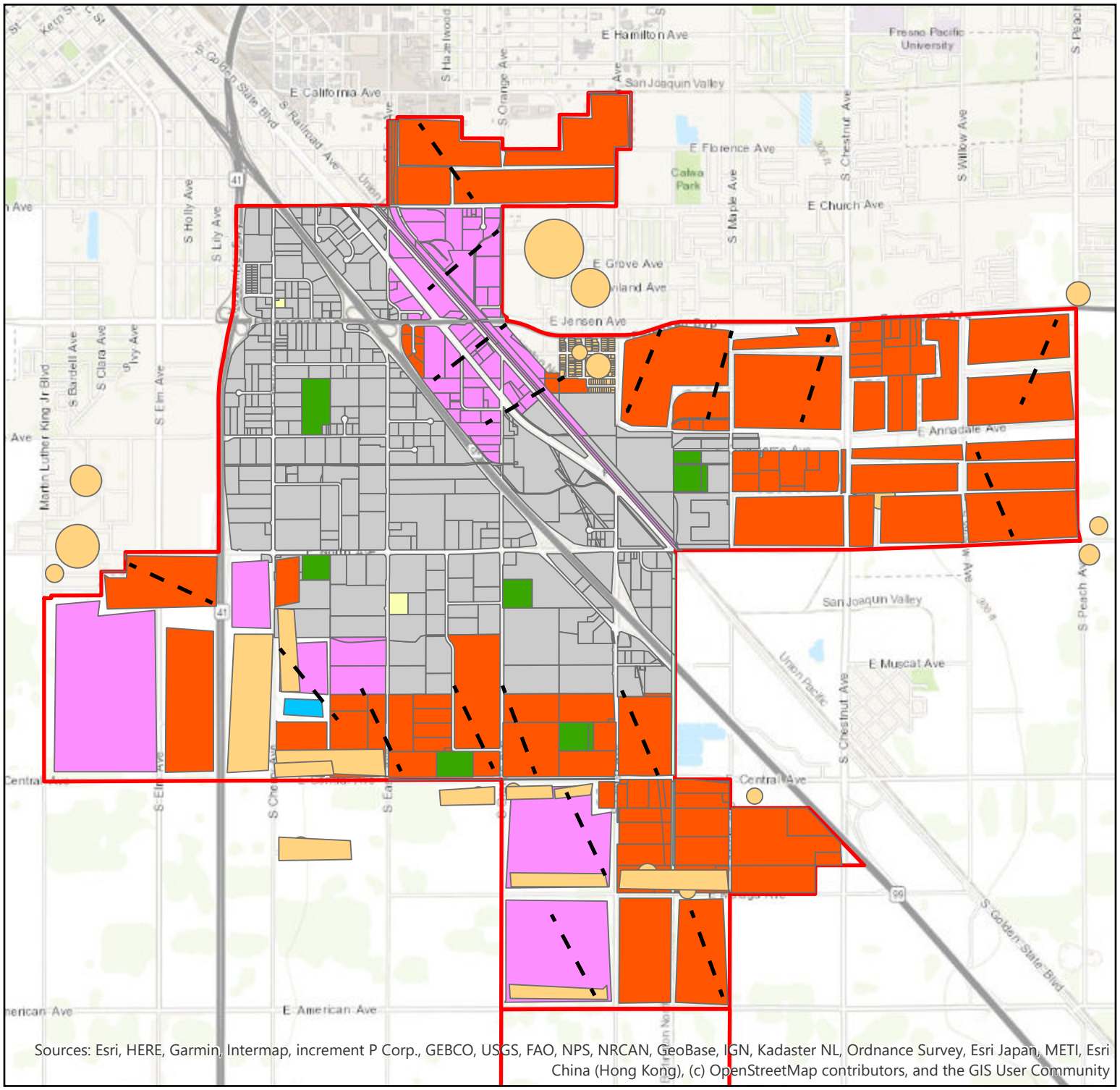


- 1/2 mile buffer
- Elementary
- Commercial General
- Residences
- Office
- Light Industrial

Zoning_Clip

ZN_BASE

- CG
- CG
- IL
- IL
- NMX
- NV
- O
- OS
- PI
- RS-5
- <all other values>
- SCSPboundary

N

0 0.38 0.75 1.5 Miles

**This page intentionally left blank**

ELLISON FOLK (State Bar No. 149232)
EDWARD T. SCHEXNAYDER (State Bar No. 284494)
SHUTE, MIHALY & WEINBERGER LLP
396 Hayes Street
San Francisco, California 94102
Telephone: (415) 552-7272
Facsimile: (415) 552-5816
Folk@smwlaw.com
Schexnayder@smwlaw.com

ASHLEY WERNER (State Bar No. 282217)
LEADERSHIP COUNSEL FOR JUSTICE AND ACCOUNTABILITY
764 P Street, Suite 012
Fresno, California 93721
Telephone: (559) 369-2790
awerner@leadershipcounsel.org

Attorneys for Petitioner
SOUTH CENTRAL NEIGHBORS UNITED

**SUPERIOR COURT OF THE STATE OF CALIFORNIA**

**COUNTY OF FRESNO**

| | |
|---|---|
| SOUTH CENTRAL NEIGHBORS UNITED,<br><br>Petitioner,<br><br>v.<br><br>CITY OF FRESNO, CITY COUNCIL OF FRESNO, and DOES 1-20,<br><br>Respondents. | Case No.<br><br>**PETITION FOR WRIT OF MANDATE AND COMPLAINT FOR INJUNCTIVE RELIEF**<br><br>CCP § 1094.5 (Alternatively CCP § 1085); Public Resources Code § 21000 et seq. ("CEQA"); State Planning & Zoning Law; City of Fresno Municipal Code |
| RICHARD CAGLIA; CAGLIA ENVIRONMENTAL LLC dba CAGLIA ENVIRONMENTAL; and DOES 21-40,<br><br>Real Parties in Interest. | |

## INTRODUCTION

1. This action challenges the January 25, 2018 decision of the Fresno City Council to approve Development Permit Application No. D-16-109, which would allow a massive new industrial park on undeveloped land in the City of Fresno ("Industrial Park Project" or "Project"). The Project would operate directly across the street from a residential community that already bears a disproportionate burden of environmental and public health impacts from industrial warehouses and distribution centers, hazardous and solid waste sites, and other noxious development in Fresno. This petition and complaint ("Petition") challenges the City Council's reliance on the environmental assessment and mitigated negative declaration prepared for the Project ("MND"). The City failed to ensure that the MND disclosed, analyzed, and mitigated the Project's many foreseeable public health and environmental impacts as required by the California Environmental Quality Act ("CEQA"), Public Resources Code Sections 21000 *et seq*., and the CEQA Guidelines, Title 14, California Code of Regulations Sections 15000 *et seq*.

2. The City further failed to ensure the Industrial Park Project's consistency with the City's General Plan and the Roosevelt Community Plan. These plans contain multiple requirements designed to ensure that the City does not approve new development without confirming that adequate water supply exists to serve the development. In approving the Project, however, the City did not comply with these requirements. It therefore violated the City's own mandate that the Project be consistent with the General Plan and any other applicable plan, like the Roosevelt Community Plan.

3. Finally, the City failed to comply with numerous requirements set forth in its Municipal Code prior to approving the Industrial Park Project. Many of these requirements are specifically designed to mitigate public health and environmental impacts from new development like the Industrial Park Project, but the City approved the Project without demonstrating how it would satisfy the Municipal Code's obligations.

## PARTIES

4. Petitioner South Central Neighbors United is an unincorporated association with members who live within the immediate vicinity and within one mile of the Industrial Park

Project site. South Central Neighbors United is dedicated to preventing environmental degradation and to the improvement of environmental quality in the neighborhoods along East Central Avenue between State Highways 99 and 41, other neighborhoods (including Daleville, East Britten Avenue, East Malaga Avenue, and the Flamingo Mobile Home Park), and the region, and to ensuring that residents in the City of Fresno and County of Fresno enjoy a decent quality of life. South Central Neighbors United and its members participated in the administrative process leading up to the City's approval of the Industrial Park Project, objecting to the Project and warning the City of the illegalities identified in this lawsuit. The maintenance and prosecution of this action will confer a substantial benefit on the public by protecting the public from the environmental and other harms alleged herein and by ensuring that the City abides by the procedures required under law in approving development projects like the one at issue here. South Central Neighbors United is beneficially interested in this matter because it has a direct interest in ensuring that the Respondents fulfill their duties to comply with CEQA, State law, and the City's own municipal code and ordinances. South Central Neighbors United has an interest in preserving and protecting, for the general public, the environment and character of Fresno.

5. Respondent City of Fresno is a charter city in the State of California responsible for administering and carrying out its laws and applicable state laws. The City is the "lead agency" for the purposes of Public Resources Code Section 21067, with principal responsibility for conducting environmental review of proposed actions. The City has a duty to comply with CEQA, state law, and its own ordinances.

6. Respondent City Council of the City of Fresno is, and at all times herein mentioned was, the duly elected decisionmaking body of Respondent City. As the decisionmaking body, the City Council was charged with responsibilities under CEQA for conducting a proper review of the proposed action's environmental impacts and granting the various approvals necessary for the Project.

7. Petitioner is unaware of the true names and capacities of Respondents fictitiously named Does 1 through 20 and sues such respondents by fictitious names. Petitioner is informed

and believes, and on that basis alleges, that the fictitiously named respondents are also responsible for the actions described in this Petition. When the true identities and capacities of these Respondents have been determined, Petitioner will amend this petition, with leave of the court if necessary, to insert such identities and capacities.

8. Petitioner is informed and believes, and thereon alleges that Real Parties in Interest Richard Caglia and Caglia Environmental, LLC are, and at all times herein mentioned were, the applicants for the approvals granted by the City for the Industrial Park Project. Petitioner is further informed and believes, and thereon alleges, that Caglia Environmental, LLC was at all times herein mentioned doing business as Caglia Environmental.

9. Petitioner is unaware of the true names and capacities of Real Parties in Interest Does 21 through 40 and sue such real parties in interest by fictitious names. Petitioner is informed and believes, and on that basis alleges, that the fictitiously named real parties in interest are directly and materially affected by the actions described in this Petition. When the true identities and capacities of these real parties in interest have been determined, Petitioner will amend this Petition, with leave of the court if necessary, to insert such identities and capacities.

## JURISDICTION AND VENUE

10. This Court has jurisdiction of the matters alleged herein pursuant to Code of Civil Procedure Sections 526, 527, 1085, 1087, and 1094.5, Public Resources Code Sections 21168 and 21168.5, and Fresno Municipal Code Section 15-6308.

11. Venue for this action properly lies in the Superior Court for the State of California in and for the County of Fresno pursuant to Code of Civil Procedure Section 394. Respondents' main offices are located in and the activities authorized by Respondents will occur in the City of Fresno, which is located in Fresno County.

12. Petitioner has performed any and all conditions precedent to filing the instant action and has exhausted any and all available administrative remedies to the extent possible and required by law. Petitioner and its members submitted numerous objections to the approvals for the Project and the City's reliance on a MND.

13. Respondents have taken final agency actions with respect to adopting the MND and granting approval of the Project. Respondents have a duty to comply with applicable state laws, including but not limited to CEQA, prior to undertaking the discretionary approvals at issue in this lawsuit. Petitioner possesses no effective remedy to challenge the approvals at issue in this action other than by means of this lawsuit.

14. On February 22, 2018, Petitioner complied with Public Resources Code Section 21167.5 by emailing and mailing to Respondents a letter stating that Petitioner planned to file a Petition for Writ of Mandate seeking to invalidate Respondents' approvals for the Industrial Park Project. Attached hereto as Exhibit A is the true and correct copy of this letter.

15. On February 23, 2018, Petitioner complied with Public Resources Code Section 21167.7 and Code of Civil Procedure Section 388 by furnishing the Attorney General of the State of California with a copy of the Petition. Attached hereto as Exhibit B is the true and correct copy of the letter transmitting the Petition to the Attorney General.

16. Pursuant to Public Resources Code Section 21167.6(b)(2), Petitioner elects to prepare the record of proceedings in this action. Concurrently with this Petition, Petitioner is filing a notice of election to prepare the administrative record.

17. Petitioner has no plain, speedy, or adequate remedy in the course of ordinary law unless this Court grants the requested writ of mandate to require Respondents to set aside their adoption of the MND and approvals for the Industrial Park Project. In the absence of such remedies, Respondents' approvals will remain in effect in violation of state law, and the environment, Petitioner, and residents and property owners of the City of Fresno and nearby communities will be irreparably harmed. No money damages or legal remedy could adequately compensate Petitioner and the residents and property owners of the City for that harm.

## STATEMENT OF FACTS

### Description of the Project Area and Project

18. The site for the proposed Industrial Park Project consists of over 110 acres of currently undeveloped open space on the edge of the City of Fresno. Portions of the project site are zoned for open space uses while others are zoned for heavy industrial uses.

19. The site is bordered by South Orange Avenue on the west, South Cedar Avenue on the east, East Central Avenue to the south, and the Orange Avenue Disposal Company to the North. Much of the surrounding land uses are currently devoted to open space, agriculture, or residential uses. Directly across Central Avenue from the Project site is a small neighborhood of single family homes located in unincorporated Fresno County. The closest home is less than 150 feet from the Project site.

20. The communities near the Project site are disproportionately comprised of lower income households and households with incomes below the federal poverty line and are exposed to disproportionate environmental burdens compared to the City and the County of Fresno as a whole. Neighborhoods and sensitive uses adjacent to and near the Project site include the homes along East Central Avenue between Orange and Cedar Avenues which face the Project site, the disadvantaged unincorporated community of Daleville, neighborhoods located on East Britten and East Malaga Avenues between Highways 41 and 99, the Flamingo Mobile Home Park, and Orange Center Elementary School. According to the California Department of Education, approximately 90.7% of the children who attend Orange Center Elementary School qualify for free or reduced price lunch under the National School Lunch Program based on their income and 42% of students are English Language Learners.

21. These areas are already subject to substantial air pollutant emissions from existing industrial uses in the area and freeway traffic. In fact, under the California Environmental Protection Agency's CalEnviroScreen ("CES") 3.0 methodology, which identifies communities that are disproportionately burdened by multiple sources of pollution, neighborhoods in South Fresno rank among the most burdened by multiple sources of pollution in the State of California. The census tract where the Project is located ranks in the 100th percentile under CES for pollution burden, the 97th percentile for PM 2.5 air pollution, and the 98th percentile for ozone and toxic releases compared to other census tracts in California. Many of the households located near the Project site have had one or multiple cancer incidences and cancer-related deaths that likely are due at least in part to pollutant exposure.

22. Additionally, the Project site is located in the Kings Sub-basin, which the

California Department of Water Resources has classified has a high priority basin because it is in critical overdraft. Most of the homes in the communities adjacent to and near the Project Site rely on private domestic wells to meet residents' needs for water for drinking, cooking, cleaning, and other household purposes. Since the drought that began in 2012, the wells at many of the homes in the area have run shallow or dry, forcing residents to spend thousands of dollars to drill deeper wells and to make emergency connections to neighbors with wells that continue to function.

23. On or about September 30, 2016, Real Parties in Interest applied for a development permit to build an "industrial business park" at the Project site. Although the City's permit review includes few details about the proposed Project, Development Permit Application No .D-16-109 discloses that the Industrial Park Project would construct seven massive concrete buildings, totaling more than 2,100,000 square feet in area. The Industrial Park Project alone would add 6,260 vehicle trips to the roads immediately surrounding the Project site and would operate twenty four hours a day, seven days per week.

24. In addition to the Industrial Park Project, the City recently approved two other large-scale warehouse projects in the Project's immediate vicinity. A new Ulta Beauty distribution center is being constructed at the junction of Orange & Central Avenue at the western boundary of the Project site. A new Amazon warehouse is being built less than .6 miles from the Project site. These two projects alone are constructing 1,525,000 square feet of new warehouse space and will generate new air quality, water, light, noise, traffic, and other environmental impacts in the immediate area of the Project site. Construction of the Amazon Warehouse has generated excessive amounts of dust that coats residents' homes and cars and triggers allergic and asthmatic responses and has resulted in increased truck traffic that passes in front of residents' homes throughout the day and night, resulting in ongoing noise and vibration impacts that can be heard and felt within residents' homes.

**The City's Project Review and Approval**

25. On or about September 18, 2017, City staff released an Environmental Assessment and Mitigated Negative Declaration for the Industrial Park Project. The City determined that the

MND was not fully within the scope of the Master Environmental Impact Report ("MEIR") prepared for the Fresno General Plan and adopted by the City Council in 2014, but the City still relied on portions of the MEIR and its mitigation measures to conclude that the Project would not create significant environmental impacts. The MND asserted that despite the Project's size and close proximity to residential communities, the Project would have no significant, unmitigated environmental impacts. The City provided notice of the availability of the Environmental Assessment only in the Fresno Bee and at the County Clerk's Office. Prior to its approval by the Development and Resource Management Director, the City provided no direct notice of the Environmental Assessment or of the Project itself to residents or owners of property in the communities surrounding the Project site or to Orange Center Elementary School.

26. Public comments submitted to the City highlighted numerous deficiencies in the MND. For instance, commenters noted that the MND failed to describe and analyze various construction-related impacts and the impacts of foreseeable uses of the Industrial Park Project, including uses that are allowed by right with no further environmental review under the City's Municipal Code. Public comment also noted that the MND failed to evaluate the Project's cumulative environmental impacts. Public comments also noted the City's failure to submit the Project to the City Council District 3 General Plan Implementation Committee for its consideration and recommendation as required by the Municipal Code. In addition, public comments requested that the Development Director exercise her authority under Fresno Municipal Code Section 15-204 to refer the permit application for this project to the Planning Commission for consideration and a public hearing.

27. On October 24, 2017, despite these and other concerns raised by the public, the City's Development and Resource Management Director approved the Industrial Park Project without a public hearing.

28. On November 8, 2017, Petitioner's members, along with multiple other groups concerned about the Project's potential impacts, filed an appeal to the City's Planning Commission pursuant to the Fresno Municipal Code. Petitioner submitted comments in support

of the appeal, which incorporated previous concerns raised about the MND's inadequacies and noted that City staff was recommending Project approval without complying with applicable requirements of the Fresno Municipal Code, the General Plan, or the Roosevelt Community Plan, all of which were designed to minimize the impacts of new development on nearby properties,

29. On December 20, 2017, the City of Fresno Planning Commission heard the appeal of the Project approval. Members of the public attended the meeting to express their concern over the City's inadequate review process and the Project's foreseeable impacts. Despite these comments, the Planning Commission voted to recommend that the City Council deny the appeal and adopt the MND.

30. On January 25, 2018, Respondent City Council heard the appeal with the Planning Commission's recommendation. Prior to the hearing, Petitioner submitted additional comments in support of the appeal. Those comments noted numerous deficiencies in the MND, including its failure to: (i) analyze or mitigate the Project's foreseeable air quality impacts even though the community surrounding the Project site already experiences one of the heaviest pollution burdens in the State, (ii) adequately analyze or mitigate the Project's groundwater impacts even though the King Sub-basin is in critical overdraft, (iii) include any analysis or appropriate mitigation relating to the disturbance of soils on a site adjacent to and with no physical separation from a landfill and another hazardous waste site; (iv) address concerns raised by responsible agencies regarding these issues and other inadequacies in the MND, and (v) the City's failure to comply with CEQA and its own Municipal Code in its approval of the MND and Development Permit.

31. At the City Council hearing on January 25, 2018, several members of South Central Neighbors United, South Central Neighbors United's attorney, and other members of the public spoke in support of the appeal, raising concerns with the MND, the lack of public notice about the Project prior to its approval, and the City's failure to comply with its Municipal Code. Despite the written and oral comments provided to the City Council, the City Council voted to adopt, without modification, the MND prepared for the Project, and it denied the appeal and

upheld the decision the issue a development permit for the Project.

## FIRST CAUSE OF ACTION

### Violation of CEQA

32. Petitioner realleges and incorporates by reference the preceding paragraphs in their entirety.

33. CEQA is designed to ensure that government agencies incorporate the goal of long-term protection of the environment into decisions that may affect the environment, consistent with the provision of a decent home and suitable living environment for every Californian. CEQA applies to any discretionary action taken by an agency that may cause a reasonably foreseeable change in the environment.

34. In furtherance of its goal of environmental protection, CEQA requires that an agency prepare an EIR for a project whenever substantial evidence in the record supports a fair argument that the project may have a significant impact on the environment. The EIR is the cornerstone of the CEQA process and discloses a project's potential adverse environmental and human impacts. The EIR also informs decisionmakers, responsible agencies, and the public of alternative mitigation measures, project elements, or project designs that would lessen or avoid the project's adverse environmental impacts.

35. CEQA also mandates that the lead agency adopt feasible and enforceable mitigation measures that would reduce or avoid any of a project's significant environmental impacts. If substantial evidence in the record supports a fair argument that any of the project's significant environmental impacts cannot be mitigated to a less than significant level, an agency may not rely on a Mitigated Negative Declaration and must instead prepare an EIR.

36. The City's approval of a development permit constitutes a discretionary act that triggers its obligation to comply with CEQA.

37. The City violated CEQA when it approved the Industrial Park Project by failing to adequately evaluate and mitigate its project impacts for the following non-exclusive list of reasons:

a. The MND fails to completely and adequately describe the Project and its

effects, including, but not limited to, failing to evaluate impacts from foreseeable uses of the Project site such as potential air quality and public health impacts, construction-related activities necessary to develop the Industrial Park Project and any related impacts. The MND also improperly segments project approvals and actions in its analysis, precluding a full understanding of the Project's significant impacts.

b. The MND fails to provide an adequate description of baseline conditions against which the City must measure the Project's impacts. For example, the air quality analysis fails to accurately disclose the current levels of harmful air pollutants near the Project site, even though the surrounding community is one of the most environmentally-burdened communities in the state.

c. The City improperly relied on the MEIR and CEQA Guidelines Section 15178 in the MND because the Project is not consistent with the MEIR's impact analysis. Even if the City could rely on the MEIR in part, the City failed to adopt mandatory mitigation measures set forth in the City's MEIR.

d. The MND fails to adequately analyze and mitigate the Project's air quality impacts. For example, the MND ignores comments from the San Joaquin Valley Air Pollution Control District indicating that the City failed to closely study potential criteria pollutants and toxic air contaminants and failed to evaluate how these pollutants will impact nearby sensitive receptors and general public health. The MND further fails to consider and mitigate odor impacts to nearby sensitive receptors. The MND improperly defers mitigation of potentially-significant air quality impacts.

e. The MND fails to adequately analyze and mitigate the Project's potential to expose individuals to Valley Fever.

f. The MND fails to adequately analyze and mitigate the Project's greenhouse gas emissions. For example, the MND made no attempt to quantify the Project's greenhouse gas emissions even though there is substantial evidence

that these emissions would be significant.

g. The MND fails to adequately analyze and mitigate the Project's water supply impacts. For example, the MND failed to provide any analysis of the water quantity that operations at the new Industrial Park Project will require. Petitioner is further informed and believe that no Water Supply Assessment was prepared for the Project, contrary to the requirements of California Water Code Section 10910. The MND also contained misleading information concerning the availability of water for the Project site by incorrectly claiming that there was a guarantee of water for the Project.

h. The MND fails to adequately analyze and mitigate the Project's aesthetic and light impacts. For example, the Project site is less than 150 feet away from the nearest residence, but the MND does not adequately address foreseeable nighttime light impacts to that or other nearby residences.

i. The MND fails to adequately analyze and mitigate the Project's impacts from disturbing contaminated soils. The Project site is located directly adjacent to, and without any physical boundary separating it from. a site designated by the Department of Toxic Substance Control and ("DTSC"). Two other DTSC sites are also located less than 1/3 of a mile away from the Project site. But the MND does not address the potential for Project construction and operation to create significant impacts by, for example, spreading contaminated dust and other hazardous materials to nearby homes and the Orange Elementary School.

j. The MND fails to adequately analyze and mitigate the noise and vibration impacts caused by construction and operation of the Project. Instead, the MND improperly defers analysis of these impacts to some uncertain future date. The Project's noise and vibration impacts are readily foreseeable given the sensitive receptors that live and go to school in the Project's immediate vicinity.

k. The MND fails to adequately analyze and mitigate the Project's traffic safety impacts. The Project will add over 6,000 new daily truck trips to the roads

surrounding the Project site. Those trucks will pass in front of homes and schools, often on narrow two-lane roads that lack shoulders or sidewalks. But the MND ignores whether this massive increase in traffic will cause safety hazards to cyclist and pedestrians, including residents and schoolchildren that walk along the roads.

l. The MND fails to adequately analyze whether the Project is inconsistent with applicable General Plan and Community Plan policies adopted for the purpose of avoiding or mitigating environmental impacts. The MND thereby fails to alert the public and decision-makers of the numerous inconsistencies of the Project with the General Plan and Roosevelt Community Plan and fails to effectively mitigate the impacts of the Project.

m. The MND fails to adequately analyze and mitigate any of the Project's cumulative impacts, including, but not limited to, aesthetic and light, air quality, greenhouse gas, noise, public health, public safety, and traffic impacts. Instead, it improperly relies on the MEIR's previous cumulative impact analysis even though that analysis did not consider the impacts from industrial development like the proposed Project.

38. Moreover, the City lacks substantial evidence to support its conclusion that identified mitigation measures will actually mitigate the Project's significant impacts. For example, the City fails to demonstrate how mitigation measures contained in the MEIR that the City relied on to approve the Project can adequately mitigate the Project's foreseeable air quality and groundwater impacts.

39. The City violated CEQA by failing to prepare an EIR for the Project when the record demonstrates that the Project may cause the potentially significant environmental impacts described above, among others, which have not been adequately disclosed, analyzed, or mitigated to a less than significant level.

40. Finally, the City failed to conduct a public scoping meeting prior to preparing the MND despite CEQA's clear requirements. California Code of Regulations, title 14, ("CEQA

Guidelines") Section 15082(c)(1) requires a public agency to hold at least one scoping meeting for projects of statewide, regional, or areawide significance. CEQA Guidelines Section 15206(b) states that a "proposed project is of statewide, regional, or areawide significance" if it is industrial in nature and encompasses more than 650,000 square feet of floor area. The Industrial Park Project plans to construct over 2,000,000 square feet of industrial floor area and consequently is a project of statewide, regional, or areawide significance. Despite this designation, the City never conducted the scoping meeting required by law.

41. For all of the above reasons, the City prejudicially abused its discretion and failed to comply with the law.

## SECOND CAUSE OF ACTION

### Inconsistency with Fresno General Plan

42. Petitioner realleges and incorporates by reference the preceding paragraphs in their entirety.

43. Government Code Section 65300 requires the legislative body of each city to adopt a general plan for the physical development within the city. The general plan is often called a "constitution" for future development to which all other land use decisions must conform. Accordingly, any decision of the City affecting land use and development, including approving development permits, must be consistent with the general plan. See *Neighborhood Action Group v. County of Calaveras* (1984) 156 Cal.App.3d 1176, 1182-86.

44. Fresno Municipal Code Section 15-5206 permits the City to approve a Development Permit only where it finds that an application is consistent with the "General Plan and any operative plan or policies that the City has adopted."

45. Despite this requirement. the Project as approved is inconsistent with numerous provisions of the General Plan. These inconsistencies include:

a. Failing to ensure that the Project provide a sustainable and stable water supply.

b. Failing to ensure that potable water production and supply are in place to serve the Project.

c. Failing to mitigate the Project's effect on the "long-range water budget" to ensure adequate supply for current and future users.

46. Respondents' conclusory findings of plan consistency, moreover, are inadequate as a matter of law and are not supported by substantial evidence. The findings consist of simple checkbox and do not demonstrate how the Project's largescale development will be consistent with the General Plan. Moreover, the City failed to articulate the connection between its findings and the evidence in the record in contravention of the California Supreme Court's decision in *Topanga Association for a Scenic Community v. County of Los Angeles* (1974) 11 Cal.3d 506.

47. Because (1) Respondents did not proceed in the manner required by law, (2) their decision was arbitrary and capricious, and (3) their decision was not supported by substantial evidence, the City's approval of the Project should be set aside as set forth below.

## THIRD CAUSE OF ACTION

### Inconsistency with Roosevelt Community Plan

48. Petitioner realleges and incorporates by reference the preceding paragraphs in their entirety.

49. Development in the Project area is also covered by the Roosevelt Community Plan, which was adopted by Respondent City Council in 1992 and contains multiple mandatory requirements that govern the Project. For example, the Community Plan requires that "a specific finding be made by the City Public Utilities Director and Fire Chief to document that an adequate supply of clean potable water can be provided to serve the domestic and fire suppression needs of each proposed development prior to approval" of a project. This policy's express purpose is to ensure "continued provision of an adequate water supply to serve" the planning area.

50. Despite this clear and mandatory requirement, the City Public Utilities Director and Fire Chief made no finding that there was adequate water supply to serve the Project. In fact, the comments by the Fire Department state that each proposed building diagram was "not approved" by the Department. This example demonstrates that the City failed to abide by the Roosevelt Community Plan's clear mandates when it approved the Project, and as a result

violated Fresno Municipal Code Section 15-5206.

51. Respondents' conclusory findings of plan consistency, moreover, are inadequate as a matter of law and are not supported by substantial evidence. The findings consist of simple checkbox and do not demonstrate how the Project's largescale development will be consistent with the Community Plan. Moreover, the City failed to articulate the connection between its findings and the evidence in the record in contravention of the California Supreme Court's decision in *Topanga Association for a Scenic Community v. County of Los Angeles,* 11 Cal.3d 506 (1974).

52. Because (1) Respondents did not proceed in the manner required by law, (2) their decision was arbitrary and capricious, and (3) their decision was not supported by substantial evidence, the City's approval of the Project should be set aside as set forth below.

## FOURTH CAUSE OF ACTION

### Violations of City of Fresno Municipal Code

53. Petitioner realleges and incorporates by reference the preceding paragraphs in their entirety.

54. The City of Fresno Municipal Code contains mandatory regulations governing proposed developments like the Industrial Park Project that were adopted to ensure consistency of new development with the surrounding community and to reduce the potential for new development to impact existing land uses. As described below, the City repeatedly ignored these mandatory requirements of its Municipal Code when it approved the Project.

55. Fresno Municipal Code Section 15-4906(D)(1) provides that a General Plan District Implementation Committee "shall review and provide recommendations to the Planning Commission and City Council on every application for a . . . Development Permit . . . to develop property within the committee's boundaries." The Committee "shall consider every plan to which the development is subject." The Project falls within the boundaries of the District 3 Implementation Committee's boundaries, which represents the poorest areas of the City and areas of the City with greatest concentration of people of color and immigrant populations. Despite the clear requirements of its code, however, the City failed to present the Project to the

District 3 Implementation Committee prior to approving the Project.

56. The City failed to comply with Fresno Municipal Code Section 15-2512, which prohibits uses from operating "in a manner that emit dust, fumes, smoke, or particulate matter adverse to the public health, safety, or general welfare of the community or detrimental to surrounding properties or improvements . . . ." But the Project-specific air quality mitigation measures adopted by the City fail to require compliance with this code Section or otherwise prevent the emissions of dust, fumes, smoke and particulate matter from impacting the community and the surrounding properties.

57. The City failed to comply with Fresno Municipal Code Sections 15-2015 and 15-2508 which requires that Project lights "be placed to deflect light away from adjacent properties and public streets" and take other steps to prevent light and glare from impacting neighboring properties. The mitigation measures adopted to address light and glare impacts do not ensure compliance with these mandatory obligations because they only require implementation if "excessive lighting spillover onto adjacent properties" occurs. Thus, the City's approval documents fail to contain any information showing that the Project will comply with the Municipal Code's requirements to prevent light and glare impacts to nearby properties.

58. The City failed to comply with Fresno Municipal Code Section 15-1304(G) which requires that the Project's "[s]ervice and loading areas should be integrated with the design of the building and shall be screened from residential areas. Special attention shall be given when designing loading facilities in a location that is proximate to residential uses." But the City's approval documents fail to contain any information showing that the Project will comply with this requirement.

59. The City failed to comply with Fresno Municipal Code Section 15-5204(b) which requires that a "Development Permit application be accompanied by a written narrative, operational statement, site plans, elevations, three-dimensional renderings, and other related materials necessary to show that the proposed development, alteration, or use of the site complies with all applicable provisions of this Code." The application materials failed to comply with this requirement and the Development Permit should not have been approved.

60. For all of the above reasons, the City abused its discretion and failed to comply with the law in approving the Development Permit for the Industrial Park Project.

## PRAYER FOR RELIEF

WHEREFORE, Petitioner prays for judgment as follows:

1. For alternative and peremptory writs of mandate directing Respondents to vacate and set aside their approval of the Project;

2. For alternative and peremptory writs of mandate directing Respondents to vacate and set aside the MND for the Project;

3. For alternative and peremptory writs of mandate directing the Respondents to comply with the requirements of CEQA and take any other action required by Public Resources Code Section 21168.9, comply with the requirements of the City of Fresno General Plan and the Roosevelt Community Plan, and to comply with the City of Fresno Municipal Code;

4. For a temporary stay, temporary restraining order, and preliminary and permanent injunctions restraining Respondents and Real Parties in Interest and their representative agents, servants, and employees, and all others acting in concert with Respondents or Real Parties in Interest on their behalf, from taking any action to implement the Project pending full compliance with the requirements of CEQA, the City of Fresno General Plan and the Roosevelt Community Plan, and the City of Fresno Municipal Code;

5. For costs of the suit;

6. For Petitioner's attorneys' fees under Code of Civil Procedure Section 1021.5 and other applicable authority; and

7. For such other and further relief as the Court deems just and proper.

DATED: February 23, 2018

SHUTE, MIHALY & WEINBERGER LLP

By: _____

ELLISON FOLK

Attorneys for Petitioner
SOUTH CENTRAL NEIGHBORS UNITED

## VERIFICATION

I, Daniel Madrid, am a member of South Central Neighbors United, petitioner in this action. I have read the foregoing Petition for Writ of Mandate. I am familiar with the contents of the Petition. All facts alleged in the above Petition, not otherwise supported by exhibits or other documents, are true of my own knowledge, except as to matters stated on information and belief, and as to those matters I believe them to be true. I declare under penalty of perjury under the laws of the State of California that the above is true and correct.

Executed at Fresno, California on February 21, 2018.

973895.1

# EXHIBIT A

SHUTE, MIHALY
& WEINBERGER LLP

396 HAYES STREET, SAN FRANCISCO, CA 94102
T: (415) 552-7272 F: (415) 552-5816
www.smwlaw.com

ELLISON FOLK
Attorney
folk@smwlaw.com

February 22, 2018

***Via E-Mail and U.S. Mail***

Ms. Yvonne Spence
City Clerk
City of Fresno
2600 Fresno Street, Room 2133
Fresno, California 93721

Re: Notice of Commencement of CEQA Litigation Challenging Approval of Development Permit D-16-109

Dear Ms. Spence:

This letter is to notify you that South Central Neighbors United will file suit against the City of Fresno ("City") and its City Council for failure to observe the requirements of the California Environmental Quality Act ("CEQA"), Public Resources Code section 21000 et seq., the CEQA Guidelines, California Code of Regulations section 15000 et seq., state law, the City's General Plan, the Roosevelt Community Plan, and the City's Municipal Code when the City approved Development Permit D-16-109 and adopted a Mitigated Negative Declaration for that permit. This notice is given pursuant to Public Resources Code section 21167.5.

Please note that, pursuant to Public Resources Code section 21167.6, the record of proceedings for City's actions includes, among other items, all "internal agency communications, including staff notes and memoranda related to the project or to compliance with [CEQA]," Because all e-mails and other internal communications related to the Project are part of the administrative record for the lawsuit to be filed by South Central Neighbors United, the City may not destroy or delete such documents prior to preparation of the record in this case.

Very truly yours,

SHUTE, MIHALY & WEINBERGER LLP

Ellison Folk

973309.1

## PROOF OF SERVICE

***South Central Neighbors United v. City of Fresno et al.***

At the time of service, I was over 18 years of age and **not a party to this action**. I am employed in the City and County of San Francisco, State of California. My business address is 396 Hayes Street, San Francisco, California 94102.

On February 22, 2018, I served true copies of the following document(s) described as:

**NOTICE OF INTENT TO SUE**

on the parties in this action as follows:

**SEE ATTACHED SERVICE LIST**

**BY MAIL:** I enclosed the document(s) in a sealed envelope or package addressed to the person(s) at the address(es) listed in the Service List and placed the envelope for collection and mailing, following our ordinary business practices. I am readily familiar with Shute, Mihaly & Weinberger LLP's practice for collecting and processing correspondence for mailing. On the same day that the correspondence is placed for collection and mailing, it is deposited in the ordinary course of business with the United States Postal Service, in a sealed envelope with postage fully prepaid.

**BY E-MAIL OR ELECTRONIC TRANSMISSION:** I caused a copy of the document(s) to be sent from e-mail address Larkin@smwlaw.com to the person(s) at the e-mail address(es) listed in the Service List. I did not receive, within a reasonable time after the transmission, any electronic message or other indication that the transmission was unsuccessful.

I declare under penalty of perjury under the laws of the State of California that the foregoing is true and correct.

Executed on February 22, 2018, at San Francisco, California.

Patricia Larkin

Patricia Larkin

**SERVICE LIST**

***South Central Neighbors United v. City of Fresno et al.***

Ms. Yvonne Spence
City Clerk
City of Fresno
2600 Fresno Street, Room 2133
Fresno, California 93721
Telephone: (559) 621-7650
Facsimile: (559) 457-1106
clerk@fresno.gov

# EXHIBIT B

SHUTE, MIHALY
& WEINBERGER LLP

396 HAYES STREET, SAN FRANCISCO, CA 94102
T: (415) 552-7272 F: (415) 552-5816
www.smwlaw.com

ELLISON FOLK
Attorney
folk@smwlaw.com

February 23, 2018

***Via U.S. Mail***

Attorney General Xavier Becerra
Office of the Attorney General
1300 "I" Street
Sacramento, California 95814

Re: Notice of Filing CEQA Litigation: South Central Neighbors United v. City of Fresno et al.

Dear Attorney General Becerra:

Enclosed please find a copy of the Petition for Writ of Mandate and Complaint for Injunctive Relief ("Petition") in the above-captioned action. The Petition is provided to you in compliance with Public Resources Code section 21167.7 and Code of Civil Procedure section 388. Please acknowledge receipt in the enclosed prepaid, self-addressed envelope. Thank you.

Very truly yours,

SHUTE, MIHALY & WEINBERGER LLP

Ellison Folk

Encl.

973317.1

**This page intentionally left blank**

| Census Tract | Total Population | California County | ZIP | Nearby City (to help approximate location only) | Longitude | Latitude | CES 3.0 Score | CES 3.0 Percentile | CES 3.0 Percentile Range | SB 535 Disadvantaged | Ozone | Ozone Pctl | PM2.5 | PM2.5 Pctl | Diesel PM | Diesel PM Pctl | Drinking Water | Drinking Water Pctl | Pesticides | Pesticides Pctl | Tox. Release | Tox. Release Pctl | Traffic | Traffic Pctl | Cleanup Sites | Cleanup Sites Pctl | Groundwater Threats | Groundwater Threats Pctl | Haz. Waste | Haz. Waste Pctl | Imp. Water Bodies | Imp. Water Bodies Pctl | Solid Waste | Solid Waste Pctl | Pollution Burden | Pollution Burden Score | Pollution Burden Pctl | Asthma | Asthma Pctl | Low Birth Weight | Low Birth Weight Pctl | Cardiovascular Disease | Cardiovascular Disease Pctl | Education | Education Pctl | Linguistic Isolation | Linguistic Isolation Pctl | Poverty | Poverty Pctl | Unemployment | Unemployment Pctl | Housing Burden | Housing Burden Pctl | Pop. Char. | Pop. Char. Score | Pop. Char. Pctl |
|---|---|---|---|---|---|---|---|---|---|---|---|---|---|---|---|---|---|---|---|---|---|---|---|---|---|---|---|---|---|---|---|---|---|---|---|---|---|---|---|---|---|---|---|---|---|---|---|---|---|---|---|---|---|---|---|---|
| 60590631100 | 5176 | Fresno | 93706 | Fresno | -119.7924962 | 36.7994952 | 96.09 | 100.00 | 96.09–100 (highest score) | Yes | 0.065 | 98.18 | 15.4 | 97.22 | 48.516 | 99.53 | 681.20 | 80.92 | 2.75 | 67.82 | 109513.9719 | 97.86 | 909.14 | 62.98 | 80.3 | 99.67 | 15.75 | 89.85 | 7.89 | 82.53 | 0 | 0.00 | 21.75 | 97.83 | 79.96 | 9.85 | 99.08 | 98.91 | 53.5 | 95.76 | 16.2 | 77.51 | 76.9 | 97.12 | 17.4 | 91.72 | 26 | 79.19 | 50.13 | 9.59 | 99.72 |
| 60590631200 | 4000 | Fresno | 93706 | Fresno | -119.7900000 | 36.7900000 | 96.09 | 100.00 | 96.09–100 (highest score) | Yes | 0.065 | 98.18 | 15.4 | 97.22 | 48.516 | 99.53 | 681.20 | 80.92 | 2.75 | 67.82 | 109513.9719 | 97.86 | 909.14 | 62.98 | 80.3 | 99.67 | 15.75 | 89.85 | 7.89 | 82.53 | 0 | 0.00 | 21.75 | 97.83 | 79.96 | 9.85 | 99.08 | 98.91 | 53.5 | 95.76 | 16.2 | 77.51 | 76.9 | 97.12 | 17.4 | 91.72 | 26 | 79.19 | 50.13 | 9.59 | 99.72 |
| 60750080101 | 3367 | Fresno | 93702 | Fresno | -119.8050000 | 36.7950000 | 96.09 | 100.00 | 96.09–100 (highest score) | Yes | 0.065 | 98.18 | 15.4 | 97.22 | 27.636 | 94.42 | 681.20 | 80.92 | 0.03 | 20.56 | 51004.8363 | 95.04 | 1.19 | 0.02 | 80.3 | 99.67 | 10.29 | 81.53 | 0.02 | 60.92 | 0 | 0.00 | 2.1 | 57.32 | 71.34 | 8.79 | 99.02 | 92.12 | 59.8 | 91.58 | 11.4 | 69.76 | 72.96 | 97.67 | 15.3 | 85.06 | 19.2 | 72.38 | 56.9 | 10.1 | 97.12 |
| 60750080800 | 6892 | San Joaquin | 95209 | Stockton | -121.3142535 | 37.9835169 | 91.49 | 99.96 | 91.49–96.1 | Yes | 0.065 | 53.02 | 12.54 | 84.02 | 24.117 | 73.52 | 278.76 | 29.51 | 12.99 | 60.56 | 2387.782922 | 69.97 | 1855.01 | 78.29 | 50.1 | 96.33 | 132.1 | 98.61 | 0.795 | 83.32 | 19 | 98.63 | 27 | 99.19 | 74.18 | 9.17 | 99.58 | 142.17 | 98.93 | 42.8 | 83.65 | 14.72 | 97.17 | 40.8 | 87.53 | 15.3 | 75.14 | 41.3 | 85.57 | 19.6 | 56.87 | 21.1 | 63.51 | 86.75 | 8.59 | 97.72 |
| 60750080900 | 2336 | Fresno | 93702 | Fresno | -119.7178327 | 36.8018 | 91.32 | 99.94 | 91.32–96.1 | Yes | 0.065 | 53.02 | 12.54 | 84.02 | 37.038 | 88.22 | 1002.03 | 93.64 | 0.03 | 20.56 | 21790.73875 | 93.15 | 1.19 | 0.02 | 80.3 | 99.67 | 10.29 | 81.53 | 0.02 | 60.92 | 0 | 0.00 | 50.2 | 99.55 | 81.02 | 9.55 | 99.58 | 89.53 | 41 | 88.51 | 15.1 | 72.17 | 24.7 | 72.72 | 16.1 | 81.19 | 18.6 | 61.87 | 24.1 | 63.78 | 82.03 | 7.23 | 92.76 |
| 60750080400 | 2396 | San Joaquin | 95205 | Stockton | -121.3033733 | 37.9513121 | 91.59 | 99.94 | 91.59–96.1 | Yes | 0.065 | 53.02 | 13.41 | 94.02 | 21.760 | 66.98 | 278.76 | 29.51 | 17.49 | 79.15 | 707.5367176 | 56.13 | 833.52 | 58.27 | 80.3 | 99.67 | 19.95 | 98.16 | 0.135 | 50.68 | 14 | 93.41 | 2.1 | 52.98 | 68.27 | 8.51 | 99.07 | 169.19 | 99.55 | 8.16 | 57.86 | 12.7 | 91.48 | 44 | 91.72 | 20.1 | 92.49 | 76.2 | 97.05 | 16.4 | 82.07 | 24.1 | 75.71 | 55.91 | 9.53 | 99.45 |
| 60590202200 | 2336 | Fresno | 93706 | Fresno | -119.8020014 | 36.8975527 | 90.13 | 99.91 | 90.13–96.1 | Yes | 0.065 | 98.18 | 15.4 | 97.22 | 20.868 | 63.53 | 788.02 | 89.12 | 1435.93 | 90.89 | 6996.962609 | 88.06 | 103.54 | 7.97 | 15.45 | 77.92 | 0 | 0.00 | 0.00 | 0 | 0.00 | 10 | 89.98 | 66.88 | 8.23 | 97.55 | 142.28 | 98.62 | 7.83 | 95.91 | 12.96 | 97.87 | 47.4 | 92.58 | 15.8 | 76.58 | 76.5 | 95.90 | 20 | 91.49 | 31.8 | 90.72 | 91.79 | 5.73 | 99.91 |
| 60590202300 | 2336 | Fresno | 93706 | Fresno | -119.8000000 | 36.8000000 | 90.13 | 99.91 | 90.13–96.1 | Yes | 0.065 | 98.18 | 15.4 | 97.22 | 20.868 | 63.53 | 788.02 | 89.12 | 1435.93 | 90.89 | 6996.962609 | 88.06 | 103.54 | 7.97 | 15.45 | 77.92 | 0 | 0.00 | 0.00 | 0 | 0.00 | 10 | 89.98 | 66.88 | 8.23 | 97.55 | 142.28 | 98.62 | 7.83 | 95.91 | 12.96 | 97.87 | 47.4 | 92.58 | 15.8 | 76.58 | 76.5 | 95.90 | 20 | 91.49 | 31.8 | 90.72 | 91.79 | 5.73 | 99.91 |
| 60590631400 | 4163 | Fresno | 93722 | Fresno | -119.7762000 | 36.7762000 | 90.13 | 99.91 | 90.13–96.1 | Yes | 0.065 | 98.18 | 15.4 | 97.22 | 27.636 | 94.42 | 681.20 | 80.92 | 2.16 | 65.16 | 75.841 | 73.84 | 1.19 | 0.02 | 80.3 | 99.67 | 10.29 | 81.53 | 0.02 | 60.92 | 0 | 0.00 | 50.2 | 99.55 | 81.02 | 9.55 | 99.58 | 107.8 | 99.12 | 21.4 | 86.18 | 12.78 | 97.3 | 48.4 | 92.58 | 16.8 | 77.51 | 76.5 | 95.90 | 19.7 | 90.12 | 28.1 | 70.7 | 91.52 | 8.1 | 97.72 |
| 60590202100 | 6165 | Fresno | 93706 | Fresno | -120.9667385 | 37.6287607 | 90.52 | 99.87 | 90.52–96.1 | Yes | 0.065 | 73.5 | 12.99 | 92.89 | 24.585 | 74.88 | 826.14 | 91.61 | 0.03 | 20.56 | 1021.797912 | 60.53 | 609.03 | 42.26 | 80 | 90.92 | 9.55 | 67.20 | 2.62 | 69.98 | 0 | 0.00 | 71.61 | 9.3 | 64.87 | 71.92 | 8.86 | 99.15 | 94.54 | 95.09 | 5.37 | 62.51 | 13.59 | 94.75 | 52.5 | 95.22 | 19.4 | 72.08 | 75.8 | 95.55 | 19.5 | 90.51 | 24.8 | 71.12 | 85.47 | 8.86 | 97.12 |
| 60590202400 | 6165 | Fresno | 93657 | Auberry/Dell | -119.8600000 | 36.9200000 | 90.52 | 99.87 | 90.52–96.1 | Yes | 0.065 | 73.5 | 12.99 | 92.89 | 24.585 | 74.88 | 826.14 | 91.61 | 0.03 | 20.56 | 1021.797912 | 60.53 | 609.03 | 42.26 | 80 | 90.92 | 9.55 | 67.20 | 2.62 | 69.98 | 0 | 0.00 | 71.61 | 9.3 | 64.87 | 71.92 | 8.86 | 99.15 | 94.54 | 95.09 | 5.37 | 62.51 | 13.59 | 94.75 | 52.5 | 95.22 | 19.4 | 72.08 | 75.8 | 95.55 | 19.5 | 90.51 | 24.8 | 71.12 | 85.47 | 8.86 | 97.12 |
| 60590631000 | 6161 | Fresno | 93725 | Fresno | -119.7925165 | 36.7630365 | 90.41 | 99.85 | 90.41–96.1 | Yes | 0.065 | 98.18 | 15.4 | 97.22 | 52.243 | 99.90 | 681.20 | 80.92 | 88.58 | 75.45 | 7030.051231 | 88.36 | 191.37 | 10.59 | 5.7 | 66.42 | 8 | 92.85 | 0.46 | 79.59 | 0 | 0.00 | 1.25 | 99.52 | 68.15 | 8.02 | 98.11 | 118.86 | 99.25 | 17.1 | 94.07 | 56.08 | 10.12 | 75.76 | 68.9 | 92.92 | 11.6 | 64.83 | 89.5 | 99.80 | 21.7 | 97.07 | 40.3 | 97.96 | 89.85 | 8.32 | 99.19 |
| 60590631300 | 5936 | Fresno | 93726 | Fresno | -119.7977116 | 36.8127123 | 90.41 | 99.85 | 90.41–96.1 | Yes | 0.065 | 98.18 | 15.4 | 97.22 | 27.636 | 94.42 | 681.20 | 80.92 | 0.03 | 20.56 | 1021.8743564 | 57.49 | 1.19 | 0.02 | 80.3 | 99.67 | 10.29 | 81.53 | 0.02 | 60.92 | 0 | 0.00 | 20 | 97.32 | 71.34 | 8.79 | 99.02 | 92.12 | 59.8 | 91.58 | 11.4 | 69.76 | 72.96 | 97.67 | 15.3 | 85.06 | 19.2 | 72.38 | 56.9 | 10.1 | 97.12 | 28.1 | 70.7 | 91.52 | 8.1 | 97.72 |
| 60270351100 | 6018 | Los Angeles | 93063 | Los Angeles | -118.2127958 | 34.2135546 | 78.04 | 99.82 | 78.04–96.1 | Yes | 0.064 | 65.09 | 12.05 | 81.56 | 27.360 | 80.51 | 495.72 | 61.93 | 58.63 | 73.02 | 3937.42898 | 92.07 | 287.25 | 92.72 | 17.4 | 80.54 | 65.05 | 92.37 | 0.085 | 35.08 | 18 | 98.52 | 3.45 | 63.33 | 79.99 | 9.85 | 99.96 | 66.49 | 75.48 | 6.54 | 65.38 | 8.87 | 63.58 | 31.4 | 79.12 | 29.1 | 89.35 | 55.4 | 27.32 | 50.8 | 19.7 | 93.87 | 21.1 | 63.51 | 79.89 | 8.32 | 97.72 |
| 60590631500 | 5176 | Fresno | 93726 | Fresno | -119.7924962 | 36.7994952 | 96.09 | 100.00 | 96.09–100 (highest score) | Yes | 0.065 | 98.18 | 15.4 | 97.22 | 48.516 | 99.53 | 681.20 | 80.92 | 2.75 | 67.82 | 109513.9719 | 97.86 | 909.14 | 62.98 | 80.3 | 99.67 | 15.75 | 89.85 | 7.89 | 82.53 | 0 | 0.00 | 21.75 | 97.83 | 79.96 | 9.85 | 99.08 | 98.91 | 53.5 | 95.76 | 16.2 | 77.51 | 76.9 | 97.12 | 17.4 | 91.72 | 26 | 79.19 | 50.13 | 9.59 | 99.72 |
| 60590631600 | 5252 | Fresno | 93726 | Fresno | -119.8027722 | 36.7727871 | 96.09 | 100.00 | 96.09–100 (highest score) | Yes | 0.065 | 98.18 | 15.4 | 97.22 | 27.636 | 94.42 | 681.20 | 80.92 | 0.03 | 20.56 | 1021.8743564 | 57.49 | 1.19 | 0.02 | 80.3 | 99.67 | 10.29 | 81.53 | 0.02 | 60.92 | 0 | 0.00 | 2.1 | 57.32 | 71.34 | 8.79 | 99.02 | 92.12 | 59.8 | 91.58 | 11.4 | 69.76 | 72.96 | 97.67 | 15.3 | 85.06 | 19.2 | 72.38 | 56.9 | 10.1 | 97.12 | 27.1 | 69.13 | 90.03 | 8.32 | 97.72 |
| 60590631910 | 5910 | Los Angeles | 90247 | Gardena | -118.2867030 | 33.8771395 | 77.41 | 99.80 | 77.41–96.1 | Yes | 0.064 | 65.09 | 12.05 | 81.56 | 27.360 | 80.51 | 495.72 | 61.93 | 58.63 | 73.02 | 3937.42898 | 92.07 | 287.25 | 92.72 | 17.4 | 80.54 | 65.05 | 92.37 | 0.085 | 35.08 | 18 | 98.52 | 3.45 | 63.33 | 79.99 | 9.85 | 99.96 | 66.49 | 75.48 | 6.54 | 65.38 | 8.87 | 63.58 | 31.4 | 79.12 | 29.1 | 89.35 | 55.4 | 27.32 | 50.8 | 19.7 | 93.87 | 21.1 | 63.51 | 79.89 | 8.32 | 97.72 |
| 60590631800 | 5176 | Fresno | 93726 | Fresno | -119.7924962 | 36.7994952 | 96.09 | 100.00 | 96.09–100 (highest score) | Yes | 0.065 | 98.18 | 15.4 | 97.22 | 48.516 | 99.53 | 681.20 | 80.92 | 2.75 | 67.82 | 109513.9719 | 97.86 | 909.14 | 62.98 | 80.3 | 99.67 | 15.75 | 89.85 | 7.89 | 82.53 | 0 | 0.00 | 21.75 | 97.83 | 79.96 | 9.85 | 99.08 | 98.91 | 53.5 | 95.76 | 16.2 | 77.51 | 76.9 | 97.12 | 17.4 | 91.72 | 26 | 79.19 | 50.13 | 9.59 | 99.72 |
| 60590631700 | 5252 | Fresno | 93726 | Fresno | -119.8027722 | 36.7727871 | 96.09 | 100.00 | 96.09–100 (highest score) | Yes | 0.065 | 98.18 | 15.4 | 97.22 | 27.636 | 94.42 | 681.20 | 80.92 | 0.03 | 20.56 | 1021.8743564 | 57.49 | 1.19 | 0.02 | 80.3 | 99.67 | 10.29 | 81.53 | 0.02 | 60.92 | 0 | 0.00 | 2.1 | 57.32 | 71.34 | 8.79 | 99.02 | 92.12 | 59.8 | 91.58 | 11.4 | 69.76 | 72.96 | 97.67 | 15.3 | 85.06 | 19.2 | 72.38 | 56.9 | 10.1 | 97.12 | 27.1 | 69.13 | 90.03 | 8.32 | 97.72 |
| 60590631900 | 5910 | Los Angeles | 90247 | Gardena | -118.2867030 | 33.8771395 | 77.41 | 99.80 | 77.41–96.1 | Yes | 0.064 | 65.09 | 12.05 | 81.56 | 27.360 | 80.51 | 495.72 | 61.93 | 58.63 | 73.02 | 3937.42898 | 92.07 | 287.25 | 92.72 | 17.4 | 80.54 | 65.05 | 92.37 | 0.085 | 35.08 | 18 | 98.52 | 3.45 | 63.33 | 79.99 | 9.85 | 99.96 | 66.49 | 75.48 | 6.54 | 65.38 | 8.87 | 63.58 | 31.4 | 79.12 | 29.1 | 89.35 | 55.4 | 27.32 | 50.8 | 19.7 | 93.87 | 21.1 | 63.51 | 79.89 | 8.32 | 97.72 |
| 60590630300 | 5176 | Fresno | 93726 | Fresno | -119.7924962 | 36.7994952 | 96.09 | 100.00 | 96.09–100 (highest score) | Yes | 0.065 | 98.18 | 15.4 | 97.22 | 48.516 | 99.53 | 681.20 | 80.92 | 2.75 | 67.82 | 109513.9719 | 97.86 | 909.14 | 62.98 | 80.3 | 99.67 | 15.75 | 89.85 | 7.89 | 82.53 | 0 | 0.00 | 21.75 | 97.83 | 79.96 | 9.85 | 99.08 | 98.91 | 53.5 | 95.76 | 16.2 | 77.51 | 76.9 | 97.12 | 17.4 | 91.72 | 26 | 79.19 | 50.13 | 9.59 | 99.72 |
| 60590630400 | 2336 | San Bernardino | 92401 | San Bernardino | -117.2940663 | 34.0912000 | 91.29 | 99.58 | 91.29–96.1 | Yes | 0.065 | 98.18 | 15.4 | 97.22 | 33.066 | 94.56 | 681.20 | 80.92 | 26.78 | 66.79 | 357983.12051 | 99.31 | 233.57 | 24.21 | 23.5 | 86.39 | 24 | 75.87 | 0.01 | 8.59 | 0 | 0.00 | 1 | 52.80 | 67.17 | 8.27 | 97.92 | 142.28 | 98.62 | 18.9 | 86.89 | 14.96 | 97.67 | 28.2 | 74.43 | 19.5 | 75.87 | 78.7 | 97.88 | 13.1 | 76.17 | 38.7 | 97.07 | 28.9 | 69.55 | 91.29 | 8.32 | 97.72 |
| 60590631100 | 5176 | Fresno | 93706 | Fresno | -119.7924962 | 36.7994952 | 96.09 | 100.00 | 96.09–100 (highest score) | Yes | 0.065 | 98.18 | 15.4 | 97.22 | 48.516 | 99.53 | 681.20 | 80.92 | 2.75 | 67.82 | 109513.9719 | 97.86 | 909.14 | 62.98 | 80.3 | 99.67 | 15.75 | 89.85 | 7.89 | 82.53 | 0 | 0.00 | 21.75 | 97.83 | 79.96 | 9.85 | 99.08 | 98.91 | 53.5 | 95.76 | 16.2 | 77.51 | 76.9 | 97.12 | 17.4 | 91.72 | 26 | 79.19 | 50.13 | 9.59 | 99.72 |
| 60270351200 | 6018 | Los Angeles | 93063 | Los Angeles | -118.2127958 | 34.2135546 | 78.04 | 99.82 | 78.04–96.1 | Yes | 0.064 | 65.09 | 12.05 | 81.56 | 27.360 | 80.51 | 495.72 | 61.93 | 58.63 | 73.02 | 3937.42898 | 92.07 | 287.25 | 92.72 | 17.4 | 80.54 | 65.05 | 92.37 | 0.085 | 35.08 | 18 | 98.52 | 3.45 | 63.33 | 79.99 | 9.85 | 99.96 | 66.49 | 75.48 | 6.54 | 65.38 | 8.87 | 63.58 | 31.4 | 79.12 | 29.1 | 89.35 | 55.4 | 27.32 | 50.8 | 19.7 | 93.87 | 21.1 | 63.51 | 79.89 | 8.32 | 97.72 |
| 60590630500 | 5176 | Fresno | 93726 | Fresno | -119.7924962 | 36.7994952 | 96.09 | 100.00 | 96.09–100 (highest score) | Yes | 0.065 | 98.18 | 15.4 | 97.22 | 48.516 | 99.53 | 681.20 | 80.92 | 2.75 | 67.82 | 109513.9719 | 97.86 | 909.14 | 62.98 | 80.3 | 99.67 | 15.75 | 89.85 | 7.89 | 82.53 | 0 | 0.00 | 21.75 | 97.83 | 79.96 | 9.85 | 99.08 | 98.91 | 53.5 | 95.76 | 16.2 | 77.51 | 76.9 | 97.12 | 17.4 | 91.72 | 26 | 79.19 | 50.13 | 9.59 | 99.72 |
| 60590630600 | 5252 | Fresno | 93726 | Fresno | -119.8027722 | 36.7727871 | 96.09 | 100.00 | 96.09–100 (highest score) | Yes | 0.065 | 98.18 | 15.4 | 97.22 | 27.636 | 94.42 | 681.20 | 80.92 | 0.03 | 20.56 | 1021.8743564 | 57.49 | 1.19 | 0.02 | 80.3 | 99.67 | 10.29 | 81.53 | 0.02 | 60.92 | 0 | 0.00 | 2.1 | 57.32 | 71.34 | 8.79 | 99.02 | 92.12 | 59.8 | 91.58 | 11.4 | 69.76 | 72.96 | 97.67 | 15.3 | 85.06 | 19.2 | 72.38 | 56.9 | 10.1 | 97.12 | 27.1 | 69.13 | 90.03 | 8.32 | 97.72 |
| 60590630700 | 5910 | Los Angeles | 90247 | Gardena | -118.2867030 | 33.8771395 | 77.41 | 99.80 | 77.41–96.1 | Yes | 0.064 | 65.09 | 12.05 | 81.56 | 27.360 | 80.51 | 495.72 | 61.93 | 58.63 | 73.02 | 3937.42898 | 92.07 | 287.25 | 92.72 | 17.4 | 80.54 | 65.05 | 92.37 | 0.085 | 35.08 | 18 | 98.52 | 3.45 | 63.33 | 79.99 | 9.85 | 99.96 | 66.49 | 75.48 | 6.54 | 65.38 | 8.87 | 63.58 | 31.4 | 79.12 | 29.1 | 89.35 | 55.4 | 27.32 | 50.8 | 19.7 | 93.87 | 21.1 | 63.51 | 79.89 | 8.32 | 97.72 |
| 60590630800 | 5176 | Fresno | 93726 | Fresno | -119.7924962 | 36.7994952 | 96.09 | 100.00 | 96.09–100 (highest score) | Yes | 0.065 | 98.18 | 15.4 | 97.22 | 48.516 | 99.53 | 681.20 | 80.92 | 2.75 | 67.82 | 109513.9719 | 97.86 | 909.14 | 62.98 | 80.3 | 99.67 | 15.75 | 89.85 | 7.89 | 82.53 | 0 | 0.00 | 21.75 | 97.83 | 79.96 | 9.85 | 99.08 | 98.91 | 53.5 | 95.76 | 16.2 | 77.51 | 76.9 | 97.12 | 17.4 | 91.72 | 26 | 79.19 | 50.13 | 9.59 | 99.72 |
| 60590630900 | 5252 | Fresno | 93726 | Fresno | -119.8027722 | 36.7727871 | 96.09 | 100.00 | 96.09–100 (highest score) | Yes | 0.065 | 98.18 | 15.4 | 97.22 | 27.636 | 94.42 | 681.20 | 80.92 | 0.03 | 20.56 | 1021.8743564 | 57.49 | 1.19 | 0.02 | 80.3 | 99.67 | 10.29 | 81.53 | 0.02 | 60.92 | 0 | 0.00 | 2.1 | 57.32 | 71.34 | 8.79 | 99.02 | 92.12 | 59.8 | 91.58 | 11.4 | 69.76 | 72.96 | 97.67 | 15.3 | 85.06 | 19.2 | 72.38 | 56.9 | 10.1 | 97.12 | 27.1 | 69.13 | 90.03 | 8.32 | 97.72 |
| 60590630100 | 5910 | Los Angeles | 90247 | Gardena | -118.2867030 | 33.8771395 | 77.41 | 99.80 | 77.41–96.1 | Yes | 0.064 | 65.09 | 12.05 | 81.56 | 27.360 | 80.51 | 495.72 | 61.93 | 58.63 | 73.02 | 3937.42898 | 92.07 | 287.25 | 92.72 | 17.4 | 80.54 | 65.05 | 92.37 | 0.085 | 35.08 | 18 | 98.52 | 3.45 | 63.33 | 79.99 | 9.85 | 99.96 | 66.49 | 75.48 | 6.54 | 65.38 | 8.87 | 63.58 | 31.4 | 79.12 | 29.1 | 89.35 | 55.4 | 27.32 | 50.8 | 19.7 | 93.87 | 21.1 | 63.51 | 79.89 | 8.32 | 97.72 |
| 60590630200 | 5176 | Fresno | 93726 | Fresno | -119.7924962 | 36.7994952 | 96.09 | 100.00 | 96.09–100 (highest score) | Yes | 0.065 | 98.18 | 15.4 | 97.22 | 48.516 | 99.53 | 681.20 | 80.92 | 2.75 | 67.82 | 109513.9719 | 97.86 | 909.14 | 62.98 | 80.3 | 99.67 | 15.75 | 89.85 | 7.89 | 82.53 | 0 | 0.00 | 21.75 | 97.83 | 79.96 | 9.85 | 99.08 | 98.91 | 53.5 | 95.76 | 16.2 | 77.51 | 76.9 | 97.12 | 17.4 | 91.72 | 26 | 79.19 | 50.13 | 9.59 | 99.72 |
| 60590630100 | 5252 | Fresno | 93726 | Fresno | -119.8027722 | 36.7727871 | 96.09 | 100.00 | 96.09–100 (highest score) | Yes | 0.065 | 98.18 | 15.4 | 97.22 | 27.636 | 94.42 | 681.20 | 80.92 | 0.03 | 20.56 | 1021.8743564 | 57.49 | 1.19 | 0.02 | 80.3 | 99.67 | 10.29 | 81.53 | 0.02 | 60.92 | 0 | 0.00 | 2.1 | 57.32 | 71.34 | 8.79 | 99.02 | 92.12 | 59.8 | 91.58 | 11.4 | 69.76 | 72.96 | 97.67 | 15.3 | 85.06 | 19.2 | 72.38 | 56.9 | 10.1 | 97.12 | 27.1 | 69.13 | 90.03 | 8.32 | 97.72 |
| 60590630500 | 5910 | Los Angeles | 90247 | Gardena | -118.2867030 | 33.8771395 | 77.41 | 99.80 | 77.41–96.1 | Yes | 0.064 | 65.09 | 12.05 | 81.56 | 27.360 | 80.51 | 495.72 | 61.93 | 58.63 | 73.02 | 3937.42898 | 92.07 | 287.25 | 92.72 | 17.4 | 80.54 | 65.05 | 92.37 | 0.085 | 35.08 | 18 | 98.52 | 3.45 | 63.33 | 79.99 | 9.85 | 99.96 | 66.49 | 75.48 | 6.54 | 65.38 | 8.87 | 63.58 | 31.4 | 79.12 | 29.1 | 89.35 | 55.4 | 27.32 | 50.8 | 19.7 | 93.87 | 21.1 | 63.51 | 79.89 | 8.32 | 97.72 |
| 60590630800 | 5176 | Fresno | 93726 | Fresno | -119.7924962 | 36.7994952 | 96.09 | 100.00 | 96.09–100 (highest score) | Yes | 0.065 | 98.18 | 15.4 | 97.22 | 48.516 | 99.53 | 681.20 | 80.92 | 2.75 | 67.82 | 109513.9719 | 97.86 | 909.14 | 62.98 | 80.3 | 99.67 | 15.75 | 89.85 | 7.89 | 82.53 | 0 | 0.00 | 21.75 | 97.83 | 79.96 | 9.85 | 99.08 | 98.91 | 53.5 | 95.76 | 16.2 | 77.51 | 76.9 | 97.12 | 17.4 | 91.72 | 26 | 79.19 | 50.13 | 9.59 | 99.72 |
| 60590630700 | 5252 | Fresno | 93726 | Fresno | -119.8027722 | 36.7727871 | 96.09 | 100.00 | 96.09–100 (highest score) | Yes | 0.065 | 98.18 | 15.4 | 97.22 | 27.636 | 94.42 | 681.20 | 80.92 | 0.03 | 20.56 | 1021.8743564 | 57.49 | 1.19 | 0.02 | 80.3 | 99.67 | 10.29 | 81.53 | 0.02 | 60.92 | 0 | 0.00 | 2.1 | 57.32 | 71.34 | 8.79 | 99.02 | 92.12 | 59.8 | 91.58 | 11.4 | 69.76 | 72.96 | 97.67 | 15.3 | 85.06 | 19.2 | 72.38 | 56.9 | 10.1 | 97.12 | 27.1 | 69.13 | 90.03 | 8.32 | 97.72 |
| 60590630900 | 5910 | Los Angeles | 90247 | Gardena | -118.2867030 | 33.8771395 | 77.41 | 99.80 | 77.41–96.1 | Yes | 0.064 | 65.09 | 12.05 | 81.56 | 27.360 | 80.51 | 495.72 | 61.93 | 58.63 | 73.02 | 3937.42898 | 92.07 | 287.25 | 92.72 | 17.4 | 80.54 | 65.05 | 92.37 | 0.085 | 35.08 | 18 | 98.52 | 3.45 | 63.33 | 79.99 | 9.85 | 99.96 | 66.49 | 75.48 | 6.54 | 65.38 | 8.87 | 63.58 | 31.4 | 79.12 | 29.1 | 89.35 | 55.4 | 27.32 | 50.8 | 19.7 | 93.87 | 21.1 | 63.51 | 79.89 | 8.32 | 97.72 |
| 60590630500 | 5176 | Fresno | 93726 | Fresno | -119.7924962 | 36.7994952 | 96.09 | 100.00 | 96.09–100 (highest score) | Yes | 0.065 | 98.18 | 15.4 | 97.22 | 48.516 | 99.53 | 681.20 | 80.92 | 2.75 | 67.82 | 109513.9719 | 97.86 | 909.14 | 62.98 | 80.3 | 99.67 | 15.75 | 89.85 | 7.89 | 82.53 | 0 | 0.00 | 21.75 | 97.83 | 79.96 | 9.85 | 99.08 | 98.91 | 53.5 | 95.76 | 16.2 | 77.51 | 76.9 | 97.12 | 17.4 | 91.72 | 26 | 79.19 | 50.13 | 9.59 | 99.72 |
| 60590630600 | 5252 | Fresno | 93726 | Fresno | -119.8027722 | 36.7727871 | 96.09 | 100.00 | 96.09–100 (highest score) | Yes | 0.065 | 98.18 | 15.4 | 97.22 | 27.636 | 94.42 | 681.20 | 80.92 | 0.03 | 20.56 | 1021.8743564 | 57.49 | 1.19 | 0.02 | 80.3 | 99.67 | 10.29 | 81.53 | 0.02 | 60.92 | 0 | 0.00 | 2.1 | 57.32 | 71.34 | 8.79 | 99.02 | 92.12 | 59.8 | 91.58 | 11.4 | 69.76 | 72.96 | 97.67 | 15.3 | 85.06 | 19.2 | 72.38 | 56.9 | 10.1 | 97.12 | 27.1 | 69.13 | 90.03 | 8.32 | 97.72 |
| 60590630700 | 5910 | Los Angeles | 90247 | Gardena | -118.2867030 | 33.8771395 | 77.41 | 99.80 | 77.41–96.1 | Yes | 0.064 | 65.09 | 12.05 | 81.56 | 27.360 | 80.51 | 495.72 | 61.93 | 58.63 | 73.02 | 3937.42898 | 92.07 | 287.25 | 92.72 | 17.4 | 80.54 | 65.05 | 92.37 | 0.085 | 35.08 | 18 | 98.52 | 3.45 | 63.33 | 79.99 | 9.85 | 99.96 | 66.49 | 75.48 | 6.54 | 65.38 | 8.87 | 63.58 | 31.4 | 79.12 | 29.1 | 89.35 | 55.4 | 27.32 | 50.8 | 19.7 | 93.87 | 21.1 | 63.51 | 79.89 | 8.32 | 97.72 |
| 60590630800 | 5176 | Fresno | 93726 | Fresno | -119.7924962 | 36.7994952 | 96.09 | 100.00 | 96.09–100 (highest score) | Yes | 0.065 | 98.18 | 15.4 | 97.22 | 48.516 | 99.53 | 681.20 | 80.92 | 2.75 | 67.82 | 109513.9719 | 97.86 | 909.14 | 62.98 | 80.3 | 99.67 | 15.75 | 89.85 | 7.89 | 82.53 | 0 | 0.00 | 21.75 | 97.83 | 79.96 | 9.85 | 99.08 | 98.91 | 53.5 | 95.76 | 16.2 | 77.51 | 76.9 | 97.12 | 17.4 | 91.72 | 26 | 79.19 | 50.13 | 9.59 | 99.72 |
| 60590630700 | 5252 | Fresno | 93726 | Fresno | -119.8027722 | 36.7727871 | 96.09 | 100.00 | 96.09–100 (highest score) | Yes | 0.065 | 98.18 | 15.4 | 97.22 | 27.636 | 94.42 | 681.20 | 80.92 | 0.03 | 20.56 | 1021.8743564 | 57.49 | 1.19 | 0.02 | 80.3 | 99.67 | 10.29 | 81.53 | 0.02 | 60.92 | 0 | 0.00 | 2.1 | 57.32 | 71.34 | 8.79 | 99.02 | 92.12 | 59.8 | 91.58 | 11.4 | 69.76 | 72.96 | 97.67 | 15.3 | 85.06 | 19.2 | 72.38 | 56.9 | 10.1 | 97.12 | 27.1 | 69.13 | 90.03 | 8.32 | 97.72 |
| 60590630900 | 5910 | Los Angeles | 90247 | Gardena | -118.2867030 | 33.8771395 | 77.41 | 99.80 | 77.41–96.1 | Yes | 0.064 | 65.09 | 12.05 | 81.56 | 27.360 | 80.51 | 495.72 | 61.93 | 58.63 | 73.02 | 3937.42898 | 92.07 | 287.25 | 92.72 | 17.4 | 80.54 | 65.05 | 92.37 | 0.085 | 35.08 | 18 | 98.52 | 3.45 | 63.33 | 79.99 | 9.85 | 99.96 | 66.49 | 75.48 | 6.54 | 65.38 | 8.87 | 63.58 | 31.4 | 79.12 | 29.1 | 89.35 | 55.4 | 27.32 | 50.8 | 19.7 | 93.87 | 21.1 | 63.51 | 79.89 | 8.32 | 97.72 |
| 60590630100 | 5176 | Fresno | 93726 | Fresno | -119.7924962 | 36.7994952 | 96.09 | 100.00 | 96.09–100 (highest score) | Yes | 0.065 | 98.18 | 15.4 | 97.22 | 48.516 | 99.53 | 681.20 | 80.92 | 2.75 | 67.82 | 109513.9719 | 97.86 | 909.14 | 62.98 | 80.3 | 99.67 | 15.75 | 89.85 | 7.89 | 82.53 | 0 | 0.00 | 21.75 | 97.83 | 79.96 | 9.85 | 99.08 | 98.91 | 53.5 | 95.76 | 16.2 | 77.51 | 76.9 | 97.12 | 17.4 | 91.72 | 26 | 79.19 | 50.13 | 9.59 | 99.72 |
| 60590630200 | 5252 | Fresno | 93726 | Fresno | -119.8027722 | 36.7727871 | 96.09 | 100.00 | 96.09–100 (highest score) | Yes | 0.065 | 98.18 | 15.4 | 97.22 | 27.636 | 94.42 | 681.20 | 80.92 | 0.03 | 20.56 | 1021.8743564 | 57.49 | 1.19 | 0.02 | 80.3 | 99.67 | 10.29 | 81.53 | 0.02 | 60.92 | 0 | 0.00 | 2.1 | 57.32 | 71.34 | 8.79 | 99.02 | 92.12 | 59.8 | 91.58 | 11.4 | 69.76 | 72.96 | 97.67 | 15.3 | 85.06 | 19.2 | 72.38 | 56.9 | 10.1 | 97.12 | 27.1 | 69.13 | 90.03 | 8.32 | 97.72 |
| 60590630500 | 5910 | Los Angeles | 90247 | Gardena | -118.2867030 | 33.8771395 | 77.41 | 99.80 | 77.41–96.1 | Yes | 0.064 | 65.09 | 12.05 | 81.56 | 27.360 | 80.51 | 495.72 | 61.93 | 58.63 | 73.02 | 3937.42898 | 92.07 | 287.25 | 92.72 | 17.4 | 80.54 | 65.05 | 92.37 | 0.085 | 35.08 | 18 | 98.52 | 3.45 | 63.33 | 79.99 | 9.85 | 99.96 | 66.49 | 75.48 | 6.54 | 65.38 | 8.87 | 63.58 | 31.4 | 79.12 | 29.1 | 89.35 | 55.4 | 27.32 | 50.8 | 19.7 | 93.87 | 21.1 | 63.51 | 79.89 | 8.32 | 97.72 |
| 60590630800 | 5176 | Fresno | 93726 | Fres

| | | | | | | | | | | | |
|---|---|---|---|---|---|---|---|---|---|---|---|
| 6037296210 | 3019 | Los Angeles | 90731 | San Pedro | -118.2839528 | 33.7476138 | 62.31 | 97.26 | 95-100% (highest scores) | Yes | 0.042 |
| 6037124103 | 2030 | Los Angeles | 91606 | North Hollywood | -118.3834122 | 34.1884919 | 62.29 | 97.25 | 95-100% (highest scores) | Yes | 0.055 |
| 6071005400 | 6590 | San Bernardino | 92405 | San Bernardino | -117.2908999 | 34.1322998 | 62.28 | 97.24 | 95-100% (highest scores) | Yes | 0.068 |
| 6037104703 | 2397 | Los Angeles | 91331 | Pacoima | -118.4005905 | 34.2552325 | 62.25 | 97.23 | 95-100% (highest scores) | Yes | 0.055 |
| 6037239310 | 3996 | Los Angeles | 90003 | Los Angeles | -118.2773062 | 33.9785291 | 62.24 | 97.21 | 95-100% (highest scores) | Yes | 0.046 |
| 6037575802 | 5167 | Los Angeles | 90813 | Long Beach | -118.197207 | 33.778962 | 62.21 | 97.20 | 95-100% (highest scores) | Yes | 0.042 |
| 6037541002 | 3209 | Los Angeles | 90746 | Carson | -118.2728118 | 33.8751813 | 62.20 | 97.19 | 95-100% (highest scores) | Yes | 0.042 |
| 6037229300 | 5498 | Los Angeles | 90011 | Los Angeles | -118.2706778 | 33.9979135 | 62.20 | 97.17 | 95-100% (highest scores) | Yes | 0.046 |
| 6037602600 | 7910 | Los Angeles | 90249 | Gardena | -118.3195843 | 33.9112721 | 62.19 | 97.16 | 95-100% (highest scores) | Yes | 0.044 |
| 6037570402 | 3496 | Los Angeles | 90805 | Long Beach | -118.1986552 | 33.8685443 | 62.14 | 97.15 | 95-100% (highest scores) | Yes | 0.042 |
| 6037224010 | 2433 | Los Angeles | 90015 | Los Angeles | -118.2658977 | 34.0367637 | 62.14 | 97.14 | 95-100% (highest scores) | Yes | 0.046 |
| 6071001400 | 2923 | San Bernardino | 91762 | Ontario | -117.6510112 | 34.0667963 | 62.13 | 97.12 | 95-100% (highest scores) | Yes | 0.062 |
| 6031001100 | 6613 | Kings | 93230 | Hanford | -119.6308433 | 36.3080545 | 62.11 | 97.11 | 95-100% (highest scores) | Yes | 0.062 |
| 6037294620 | 4219 | Los Angeles | 90744 | Wilmington | -118.2479267 | 33.7874696 | 62.11 | 97.10 | 95-100% (highest scores) | Yes | 0.042 |
| 6037294900 | 3265 | Los Angeles | 90744 | Wilmington | -118.2774453 | 33.7748702 | 62.08 | 97.09 | 95-100% (highest scores) | Yes | 0.042 |
| 6071001501 | 4052 | San Bernardino | 91764 | Ontario | -117.6409852 | 34.0672615 | 62.04 | 97.07 | 95-100% (highest scores) | Yes | 0.062 |
| 6037294830 | 3707 | Los Angeles | 90744 | Wilmington | -118.267011 | 33.7729434 | 61.94 | 97.06 | 95-100% (highest scores) | Yes | 0.042 |
| 6099001700 | 2589 | Stanislaus | 95351 | Modesto | -121.0071046 | 37.6373175 | 61.93 | 97.05 | 95-100% (highest scores) | Yes | 0.053 |
| 6099001601 | 4803 | Stanislaus | 95351 | Modesto | -121.0159498 | 37.6296152 | 61.91 | 97.04 | 95-100% (highest scores) | Yes | 0.053 |
| 6071005800 | 3981 | San Bernardino | 92410 | San Bernardino | -117.2844304 | 34.1092386 | 61.90 | 97.02 | 95-100% (highest scores) | Yes | 0.065 |
| 6037541100 | 3321 | Los Angeles | 90220 | Compton | -118.2607508 | 33.8984704 | 61.88 | 97.01 | 95-100% (highest scores) | Yes | 0.044 |
| 6037533806 | 4165 | Los Angeles | 90201 | Bell | -118.1704919 | 33.9722323 | 61.85 | 97.00 | 95-100% (highest scores) | Yes | 0.046 |
| 6037542402 | 3152 | Los Angeles | 90221 | Compton | -118.2124134 | 33.881969 | 61.84 | 96.99 | 95-100% (highest scores) | Yes | 0.042 |
| 6077002701 | 6409 | San Joaquin | 95215 | Stockton | -121.2359945 | 37.9647921 | 61.84 | 96.97 | 95-100% (highest scores) | Yes | 0.046 |

| | | | | | | | | | | | |
|---|---|---|---|---|---|---|---|---|---|---|---|
| 6037226410 | 3491 | Los Angeles | 90011 | Los Angeles | -118.2622815 | 34.0241996 | 56.69 | 94.48 | 90-95% | Yes | 0.046 |
| 6037226420 | 4906 | Los Angeles | 90011 | Los Angeles | -118.2570623 | 34.0218419 | 56.69 | 94.46 | 90-95% | Yes | 0.046 |
| 6037533202 | 2762 | Los Angeles | 90255 | Huntington Park | -118.2097713 | 33.9784203 | 56.68 | 94.45 | 90-95% | Yes | 0.046 |
| 6077001800 | 3939 | San Joaquin | 95205 | Stockton | -121.254226 | 37.9672954 | 56.63 | 94.44 | 90-95% | Yes | 0.046 |
| 6065041600 | 6230 | Riverside | 92879 | Corona | -117.5572508 | 33.875079 | 56.63 | 94.43 | 90-95% | Yes | 0.060 |
| 6067002200 | 4004 | Sacramento | 95818 | Sacramento | -121.5071562 | 38.5612821 | 56.60 | 94.41 | 90-95% | Yes | 0.046 |
| 6037240600 | 4932 | Los Angeles | 90003 | Los Angeles | -118.2684059 | 33.946945 | 56.58 | 94.40 | 90-95% | Yes | 0.044 |
| 6037123303 | 3301 | Los Angeles | 91605 | North Hollywood | -118.4116037 | 34.1972751 | 56.56 | 94.39 | 90-95% | Yes | 0.055 |
| 6099002002 | 4527 | Stanislaus | 95357 | Modesto | -120.9148312 | 37.6444867 | 56.55 | 94.38 | 90-95% | Yes | 0.053 |
| 6037540902 | 4506 | Los Angeles | 90061 | Los Angeles | -118.2718223 | 33.9109785 | 56.55 | 94.36 | 90-95% | Yes | 0.044 |
| 6037541200 | 5662 | Los Angeles | 90222 | Compton | -118.2543733 | 33.9083355 | 56.54 | 94.35 | 90-95% | Yes | 0.044 |
| 6019004205 | 5888 | Fresno | 93722 | Fresno | -119.8544515 | 36.7971891 | 56.53 | 94.34 | 90-95% | Yes | 0.062 |
| 6037402301 | 5454 | Los Angeles | 91768 | Pomona | -117.7700769 | 34.0680438 | 56.51 | 94.32 | 90-95% | Yes | 0.057 |
| 6037241400 | 3285 | Los Angeles | 90061 | Los Angeles | -118.2755609 | 33.92558 | 56.47 | 94.31 | 90-95% | Yes | 0.044 |
| 6071001503 | 4195 | San Bernardino | 91764 | Ontario | -117.6324246 | 34.0667083 | 56.42 | 94.30 | 90-95% | Yes | 0.062 |
| 6037603302 | 3804 | Los Angeles | 90247 | Gardena | -118.3073078 | 33.8749347 | 56.40 | 94.29 | 90-95% | Yes | 0.044 |
| 6037127605 | 3549 | Los Angeles | 91406 | Van Nuys | -118.4847378 | 34.189727 | 56.39 | 94.27 | 90-95% | Yes | 0.057 |
| 6037432700 | 5262 | Los Angeles | 91731 | El Monte | -118.0339351 | 34.0755467 | 56.38 | 94.26 | 90-95% | Yes | 0.050 |
| 6037433902 | 3780 | Los Angeles | 91732 | El Monte | -118.0268687 | 34.0525708 | 56.34 | 94.25 | 90-95% | Yes | 0.048 |
| 6037553602 | 4730 | Los Angeles | 90723 | Paramount | -118.1644286 | 33.9089742 | 56.33 | 94.24 | 90-95% | Yes | 0.044 |
| 6037218400 | 4714 | Los Angeles | 90016 | Los Angeles | -118.3592342 | 34.0369278 | 56.31 | 94.22 | 90-95% | Yes | 0.048 |
| 6037433501 | 1954 | Los Angeles | 91733 | South El Monte | -118.0651222 | 34.0572554 | 56.31 | 94.21 | 90-95% | Yes | 0.048 |
| 6037228600 | 5049 | Los Angeles | 90011 | Los Angeles | -118.2608661 | 34.0036935 | 56.29 | 94.20 | 90-95% | Yes | 0.046 |
| 6037570602 | 6356 | Los Angeles | 90805 | Long Beach | -118.1729332 | 33.8561559 | 56.26 | 94.19 | 90-95% | Yes | 0.042 |
| 6037543201 | 3607 | Los Angeles | 90220 | Compton | -118.2347142 | 33.8849107 | 56.24 | 94.17 | 90-95% | Yes | 0.042 |
| 6019001407 | 4694 | Fresno | 93727 | Fresno | -119.7273757 | 36.7322737 | 56.23 | 94.16 | 90-95% | Yes | 0.065 |
| 6037531902 | 4077 | Los Angeles | 90022 | Los Angeles | -118.1324571 | 34.0117799 | 56.23 | 94.15 | 90-95% | Yes | 0.046 |
| 6037232700 | 5895 | Los Angeles | 90037 | Los Angeles | -118.2858532 | 33.9923462 | 56.20 | 94.14 | 90-95% | Yes | 0.046 |
| 6037291120 | 2210 | Los Angeles | 90248 | Gardena | -118.2869247 | 33.9127934 | 56.20 | 94.12 | 90-95% | Yes | 0.044 |
| 6037531702 | 4754 | Los Angeles | 90022 | Los Angeles | -118.1597749 | 34.0158731 | 56.18 | 94.11 | 90-95% | Yes | 0.046 |
| 6037542104 | 3524 | Los Angeles | 90221 | Compton | -118.190616 | 33.900837 | 56.16 | 94.10 | 90-95% | Yes | 0.044 |
| 6077003803 | 5281 | San Joaquin | 95231 | French Camp | -121.2688218 | 37.885527 | 56.15 | 94.09 | 90-95% | Yes | 0.048 |
| 6065041203 | 3545 | Riverside | 92503 | Riverside | -117.457896 | 33.9337586 | 56.11 | 94.07 | 90-95% | Yes | 0.062 |
| 6037121802 | 3525 | Los Angeles | 91605 | North Hollywood | -118.3913647 | 34.2192112 | 56.11 | 94.06 | 90-95% | Yes | 0.055 |
| 6037434004 | 2796 | Los Angeles | 91733 | South El Monte | -118.0321896 | 34.0402202 | 56.09 | 94.05 | 90-95% | Yes | 0.048 |
| 6037185203 | 3200 | Los Angeles | 90065 | Los Angeles | -118.2316884 | 34.1001272 | 56.09 | 94.03 | 90-95% | Yes | 0.046 |
| 6037532500 | 4078 | Los Angeles | 90255 | Huntington Park | -118.2209803 | 33.9899239 | 56.05 | 94.02 | 90-95% | Yes | 0.046 |
| 6037407002 | 3804 | Los Angeles | 91746 | La Puente | -117.991289 | 34.0555809 | 56.04 | 94.01 | 90-95% | Yes | 0.050 |
| 6037239802 | 4902 | Los Angeles | 90001 | Los Angeles | -118.2629489 | 33.962408 | 56.03 | 94.00 | 90-95% | Yes | 0.046 |
| 6037228210 | 3806 | Los Angeles | 90011 | Los Angeles | -118.2534818 | 34.010412 | 56.02 | 93.98 | 90-95% | Yes | 0.046 |
| 6047001302 | 3264 | Merced | 95340 | Merced | -120.4781909 | 37.3040353 | 56.00 | 93.97 | 90-95% | Yes | 0.057 |
| 6037575402 | 4065 | Los Angeles | 90813 | Long Beach | -118.1915438 | 33.7862264 | 56.00 | 93.96 | 90-95% | Yes | 0.042 |
| 6037231710 | 4358 | Los Angeles | 90037 | Los Angeles | -118.2893576 | 34.0073136 | 55.98 | 93.95 | 90-95% | Yes | 0.046 |
| 6065042010 | 5887 | Riverside | 92570 | Perris | -117.2733152 | 33.8509446 | 55.98 | 93.93 | 90-95% | Yes | 0.065 |
| 6037405102 | 5069 | Los Angeles | 91706 | Baldwin Park | -117.9626794 | 34.0892124 | 55.97 | 93.92 | 90-95% | Yes | 0.053 |
| 6037203600 | 5394 | Los Angeles | 90033 | Los Angeles | -118.2095139 | 34.0513395 | 55.95 | 93.91 | 90-95% | Yes | 0.046 |
| 6037570204 | 4130 | Los Angeles | 90805 | Long Beach | -118.1556129 | 33.8716329 | 55.93 | 93.90 | 90-95% | Yes | 0.042 |
| 6065040201 | 5897 | Riverside | 92509 | Riverside | -117.4188498 | 33.9839627 | 55.92 | 93.88 | 90-95% | Yes | 0.065 |
| 6037104822 | 2277 | Los Angeles | 91331 | Pacoima | -118.4209236 | 34.2458338 | 55.92 | 93.87 | 90-95% | Yes | 0.055 |
| 6077005127 | 5510 | San Joaquin | 95330 | Lathrop | -121.2811772 | 37.8340882 | 55.91 | 93.86 | 90-95% | Yes | 0.048 |
| 6037124104 | 2439 | Los Angeles | 91606 | North Hollywood | -118.38341 | 34.1848613 | 55.89 | 93.85 | 90-95% | Yes | 0.055 |
| 6037302503 | 4330 | Los Angeles | 91205 | Glendale | -118.2473422 | 34.1376048 | 55.89 | 93.83 | 90-95% | Yes | 0.051 |
| 6059110500 | 8631 | Orange | 90620 | Buena Park | -118.0150263 | 33.8646765 | 55.88 | 93.82 | 90-95% | Yes | 0.046 |
| 6071002401 | 8946 | San Bernardino | 92335 | Fontana | -117.4800188 | 34.0955973 | 55.88 | 93.81 | 90-95% | Yes | 0.065 |
| 6037408401 | 4289 | Los Angeles | 91745 | Hacienda Heights | -117.9819037 | 34.0182786 | 55.86 | 93.79 | 90-95% | Yes | 0.048 |
| 6019003807 | 3362 | Fresno | 93722 | Fresno | -119.8532189 | 36.7591628 | 55.86 | 93.78 | 90-95% | Yes | 0.062 |
| 6071004604 | 5177 | San Bernardino | 92405 | San Bernardino | -117.3080773 | 34.1420604 | 55.85 | 93.77 | 90-95% | Yes | 0.068 |
| 6065041101 | 5139 | Riverside | 92503 | Riverside | -117.464757 | 33.9430035 | 55.84 | 93.76 | 90-95% | Yes | 0.062 |
| 6019006900 | 3170 | Fresno | 93616 | Del Rey | -119.5600522 | 36.6466139 | 55.81 | 93.74 | 90-95% | Yes | 0.065 |
| 6037310501 | 3205 | Los Angeles | 91504 | Burbank | -118.3394509 | 34.1946547 | 55.81 | 93.73 | 90-95% | Yes | 0.055 |
| 6037237101 | 3705 | Los Angeles | 90044 | Los Angeles | -118.2913772 | 33.9856234 | 55.80 | 93.72 | 90-95% | Yes | 0.046 |
| 6071000303 | 7169 | San Bernardino | 91763 | Montclair | -117.7146207 | 34.0524327 | 55.79 | 93.71 | 90-95% | Yes | 0.060 |
| 6077005110 | 6488 | San Joaquin | 95336 | Manteca | -121.200625 | 37.7985094 | 55.77 | 93.69 | 90-95% | Yes | 0.051 |
| 6037204410 | 2363 | Los Angeles | 90033 | Los Angeles | -118.2152707 | 34.0461881 | 55.73 | 93.68 | 90-95% | Yes | 0.046 |
| 6077005122 | 4829 | San Joaquin | 95330 | Lathrop | -121.2731314 | 37.7868413 | 55.71 | 93.67 | 90-95% | Yes | 0.051 |
| 6059011601 | 7955 | Orange | 92832 | Fullerton | -117.9286329 | 33.8608345 | 55.69 | 93.66 | 90-95% | Yes | 0.046 |
| 6037534406 | 4609 | Los Angeles | 90201 | Bell | -118.1749749 | 33.9647497 | 55.68 | 93.64 | 90-95% | Yes | 0.046 |
| 6037237300 | 5262 | Los Angeles | 90047 | Los Angeles | -118.3110714 | 33.9782833 | 55.65 | 93.63 | 90-95% | Yes | 0.046 |
| 6037207301 | 4521 | Los Angeles | 90013 | Los Angeles | -118.2516175 | 34.0465369 | 55.65 | 93.62 | 90-95% | Yes | 0.046 |
| 6037531901 | 6529 | Los Angeles | 90022 | Los Angeles | -118.1423614 | 34.01324 | 55.62 | 93.61 | 90-95% | Yes | 0.046 |
| 6037192620 | 3868 | Los Angeles | 90004 | Los Angeles | -118.2960541 | 34.0776717 | 55.62 | 93.59 | 90-95% | Yes | 0.048 |
| 6077001700 | 3998 | San Joaquin | 95205 | Stockton | -121.2573976 | 37.9774362 | 55.60 | 93.58 | 90-95% | Yes | 0.046 |
| 6071005300 | 5516 | San Bernardino | 92405 | San Bernardino | -117.2912706 | 34.1396027 | 55.59 | 93.57 | 90-95% | Yes | 0.068 |
| 6037199201 | 4089 | Los Angeles | 90031 | Los Angeles | -118.211907 | 34.0762204 | 55.58 | 93.56 | 90-95% | Yes | 0.046 |
| 6037433504 | 4679 | Los Angeles | 91733 | South El Monte | -118.0551094 | 34.0585512 | 55.55 | 93.54 | 90-95% | Yes | 0.048 |
| 6019006201 | 2608 | Fresno | 93657 | Sanger | -119.5374742 | 36.6847537 | 55.52 | 93.53 | 90-95% | Yes | 0.065 |
| 6037531101 | 5091 | Los Angeles | 90063 | Los Angeles | -118.1885025 | 34.0360915 | 55.51 | 93.52 | 90-95% | Yes | 0.046 |
| 6037602105 | 4273 | Los Angeles | 90250 | Hawthorne | -118.3481425 | 33.9200581 | 55.44 | 93.50 | 90-95% | Yes | 0.044 |
| 6071001001 | 4990 | San Bernardino | 91762 | Ontario | -117.6754832 | 34.0808017 | 55.35 | 93.49 | 90-95% | Yes | 0.062 |
| 6001409200 | 3152 | Alameda | 94603 | Oakland | -122.1777872 | 37.7290846 | 55.29 | 93.48 | 90-95% | Yes | 0.030 |
| 6037572900 | 5250 | Los Angeles | 90810 | Long Beach | -118.2113097 | 33.7930319 | 55.29 | 93.47 | 90-95% | Yes | 0.042 |
| 6037208402 | 2775 | Los Angeles | 90026 | Los Angeles | -118.266009 | 34.0683668 | 55.28 | 93.45 | 90-95% | Yes | 0.046 |
| 6019002100 | 5419 | Fresno | 93728 | Fresno | -119.8157426 | 36.7590503 | 55.26 | 93.44 | 90-95% | Yes | 0.062 |
| 6037132102 | 5310 | Los Angeles | 91406 | Van Nuys | -118.497369 | 34.2020955 | 55.26 | 93.43 | 90-95% | Yes | 0.057 |
| 6037402902 | 6445 | Los Angeles | 91766 | Pomona | -117.7449619 | 34.0340192 | 55.18 | 93.42 | 90-95% | Yes | 0.057 |
| 6019001900 | 2914 | Fresno | 93706 | Fresno | -119.8872955 | 36.7085379 | 55.16 | 93.40 | 90-95% | Yes | 0.062 |
| 6077002100 | 5546 | San Joaquin | 95205 | Stockton | -121.2438699 | 37.9376415 | 55.14 | 93.39 | 90-95% | Yes | 0.046 |
| 6047000201 | 3626 | Merced | 95303 | Ballico | -120.7094467 | 37.459795 | 55.14 | 93.38 | 90-95% | Yes | 0.057 |
| 6047002100 | 3862 | Merced | 93635 | Los Banos | -120.9829041 | 36.9556144 | 55.12 | 93.37 | 90-95% | Yes | 0.046 |
| 6037127102 | 4726 | Los Angeles | 91405 | Van Nuys | -118.4445253 | 34.2060073 | 55.09 | 93.35 | 90-95% | Yes | 0.055 |
| 6113010203 | 5397 | Yolo | 95691 | West Sacramento | -121.563721 | 38.5637651 | 55.09 | 93.34 | 90-95% | Yes | 0.046 |
| 6037532605 | 3715 | Los Angeles | 90255 | Huntington Park | -118.2251677 | 33.9842413 | 55.07 | 93.33 | 90-95% | Yes | 0.046 |
| 6037232400 | 6957 | Los Angeles | 90062 | Los Angeles | -118.3108346 | 33.9993836 | 55.05 | 93.32 | 90-95% | Yes | 0.046 |
| 6071001809 | 4476 | San Bernardino | 91761 | Ontario | -117.6035233 | 34.0246895 | 55.03 | 93.30 | 90-95% | Yes | 0.062 |
| 6077005129 | 3582 | San Joaquin | 95330 | Lathrop | -121.2887619 | 37.8179738 | 55.01 | 93.29 | 90-95% | Yes | 0.050 |
| 6019002300 | 3624 | Fresno | 93728 | Fresno | -119.7942162 | 36.756122 | 54.99 | 93.28 | 90-95% | Yes | 0.062 |
| 6037408139 | 4482 | Los Angeles | 91744 | La Puente | -117.9134004 | 34.012323 | 54.98 | 93.27 | 90-95% | Yes | 0.051 |
| 6047000902 | 8419 | Merced | 95341 | Merced | -120.5557004 | 37.322387 | 54.97 | 93.25 | 90-95% | Yes | 0.057 |
| 6037187200 | 3132 | Los Angeles | 90039 | Los Angeles | -118.2473892 | 34.1036004 | 54.95 | 93.24 | 90-95% | Yes | 0.048 |
| 6037209200 | 2785 | Los Angeles | 90017 | Los Angeles | -118.2610818 | 34.0542091 | 54.95 | 93.23 | 90-95% | Yes | 0.046 |
| 6067004502 | 4795 | Sacramento | 95823 | Sacramento | -121.4629263 | 38.5025521 | 54.94 | 93.21 | 90-95% | Yes | 0.048 |
| 6065042507 | 5011 | Riverside | 92551 | Moreno Valley | -117.2329208 | 33.883118 | 54.89 | 93.20 | 90-95% | Yes | 0.065 |
| 6071007107 | 3302 | San Bernardino | 92313 | Grand Terrace | -117.3231317 | 34.0386965 | 54.88 | 93.19 | 90-95% | Yes | 0.065 |
| 6037302002 | 3532 | Los Angeles | 91206 | Glendale | -118.2505278 | 34.1491687 | 54.88 | 93.18 | 90-95% | Yes | 0.051 |
| 6037535901 | 5757 | Los Angeles | 90280 | South Gate | -118.194008 | 33.9462081 | 54.86 | 93.16 | 90-95% | Yes | 0.044 |
| 6037575101 | 4754 | Los Angeles | 90804 | Long Beach | -118.1623973 | 33.7881302 | 54.84 | 93.15 | 90-95% | Yes | 0.042 |
| 6037228220 | 4389 | Los Angeles | 90011 | Los Angeles | -118.2513193 | 34.0060455 | 54.84 | 93.14 | 90-95% | Yes | 0.046 |
| 6037536200 | 7289 | Los Angeles | 90280 | South Gate | -118.1679058 | 33.9202524 | 54.84 | 93.13 | 90-95% | Yes | 0.044 |
| 6037121010 | 4989 | Los Angeles | 91352 | Sun Valley | -118.403944 | 34.223913 | 54.83 | 93.11 | 90-95% | Yes | 0.055 |
| 6037221401 | 3359 | Los Angeles | 90018 | Los Angeles | -118.3132694 | 34.033886 | 54.81 | 93.10 | 90-95% | Yes | 0.046 |
| 6077002800 | 6052 | San Joaquin | 95206 | Stockton | -121.2537583 | 37.9156575 | 54.81 | 93.09 | 90-95% | Yes | 0.048 |
| 6037601700 | 5646 | Los Angeles | 90304 | Inglewood | -118.3498384 | 33.935217 | 54.80 | 93.08 | 90-95% | Yes | 0.044 |
| 6047001502 | 2822 | Merced | 95341 | Merced | -120.4963376 | 37.2987597 | 54.78 | 93.06 | 90-95% | Yes | 0.057 |
| 6071004700 | 5791 | San Bernardino | 92411 | San Bernardino | -117.3086072 | 34.124581 | 54.77 | 93.05 | 90-95% | Yes | 0.065 |
| 6019004701 | 6682 | Fresno | 93705 | Fresno | -119.8369046 | 36.7994995 | 54.74 | 93.04 | 90-95% | Yes | 0.062 |
| 6037204420 | 3138 | Los Angeles | 90033 | Los Angeles | -118.2116197 | 34.0445316 | 54.72 | 93.03 | 90-95% | Yes | 0.046 |
| 6037123410 | 4247 | Los Angeles | 91605 | North Hollywood | -118.4214325 | 34.1993793 | 54.71 | 93.01 | 90-95% | Yes | 0.055 |
| 6037294810 | 3991 | Los Angeles | 90744 | Wilmington | -118.2714945 | 33.7795265 | 54.70 | 93.00 | 90-95% | Yes | 0.042 |
| 6037433700 | 3294 | Los Angeles | 91733 | South El Monte | -118.0588991 | 34.0468938 | 54.69 | 92.99 | 90-95% | Yes | 0.048 |
| 6037552400 | 2794 | Los Angeles | 90650 | Norwalk | -118.0498503 | 33.899139 | 54.65 | 92.98 | 90-95% | Yes | 0.046 |
| 6037121210 | 3122 | Los Angeles | 91331 | Pacoima | -118.4039928 | 34.2402959 | 54.65 | 92.96 | 90-95% | Yes | 0.055 |
| 6047001602 | 7243 | Merced | 95341 | Merced | -120.4766004 | 37.2803817 | 54.63 | 92.95 | 90-95% | Yes | 0.057 |
| 6037302301 | 3790 | Los Angeles | 91204 | Glendale | -118.2632446 | 34.1446832 | 54.62 | 92.94 | 90-95% | Yes | 0.051 |
| 6071001104 | 5058 | San Bernardino | 91762 | Ontario | -117.6654013 | 34.0781089 | 54.61 | 92.92 | 90-95% | Yes | 0.062 |
| 6039000900 | 9612 | Madera | 93638 | Madera | -120.0448456 | 36.9589685 | 54.57 | 92.91 | 90-95% | Yes | 0.062 |
| 6037540300 | 5267 | Los Angeles | 90262 | Lynwood | -118.2196223 | 33.933573 | 54.54 | 92.90 | 90-95% | Yes | 0.044 |
| 6037404600 | 1422 | Los Angeles | 91706 | Baldwin Park | -117.9635233 | 34.1119138 | 54.52 | 92.89 | 90-95% | Yes | 0.053 |
| 6077002503 | 2560 | San Joaquin | 95206 | Stockton | -121.302748 | 37.9206017 | 54.51 | 92.87 | 90-95% | Yes | 0.048 |
| 6071009400 | 3493 | San Bernardino | 92311 | Barstow | -117.0458056 | 34.8973677 | 54.51 | 92.86 | 90-95% | Yes | 0.060 |
| 6037602802 | 4304 | Los Angeles | 90044 | Los Angeles | -118.3003773 | 33.9201775 | 54.50 | 92.85 | 90-95% | Yes | 0.044 |
| 6037533501 | 3090 | Los Angeles | 90255 | Huntington Park | -118.200577 | 33.9854565 | 54.49 | 92.84 | 90-95% | Yes | 0.046 |
| 6029001600 | 1390 | Kern | 93301 | Bakersfield | -119.0153944 | 35.3769557 | 54.49 | 92.82 | 90-95% | Yes | 0.065 |
| 6037575300 | 4947 | Los Angeles | 90813 | Long Beach | -118.1850264 | 33.7862258 | 54.49 | 92.81 | 90-95% | Yes | 0.042 |
| 6059089003 | 4012 | Orange | 92843 | Garden Grove | -117.9289907 | 33.7633574 | 54.46 | 92.80 | 90-95% | Yes | 0.046 |
| 6037190520 | 3728 | Los Angeles | 90027 | Los Angeles | -118.3038048 | 34.0999328 | 54.46 | 92.79 | 90-95% | Yes | 0.050 |
| 6019002501 | 5098 | Fresno | 93703 | Fresno | -119.7634701 | 36.761369 | 54.46 | 92.77 | 90-95% | Yes | 0.065 |
| 6037242000 | 3938 | Los Angeles | 90002 | Los Angeles | -118.2502155 | 33.9392821 | 54.46 | 92.76 | 90-95% | Yes | 0.044 |
| 6071001308 | 5100 | San Bernardino | 91764 | Ontario | -117.6153156 | 34.078896 | 54.45 | 92.75 | 90-95% | Yes | 0.062 |
| 6071004101 | 5698 | San Bernardino | 92407 | San Bernardino | -117.347706 | 34.1657154 | 54.41 | 92.74 | 90-95% | Yes | 0.068 |
| 6037296220 | 4307 | Los Angeles | 90731 | San Pedro | -118.2837798 | 33.7410279 | 54.40 | 92.72 | 90-95% | Yes | 0.042 |
| 6037602700 | 3045 | Los Angeles | 90250 | Hawthorne | -118.3160924 | 33.9230881 | 54.38 | 92.71 | 90-95% | Yes | 0.044 |
| 6037294820 | 3579 | Los Angeles | 90744 | Wilmington | -118.2656258 | 33.7797819 | 54.38 | 92.70 | 90-95% | Yes | 0.042 |
| 6037531102 | 3548 | Los Angeles | 90063 | Los Angeles | -118.1815818 | 34.0368392 | 54.37 | 92.69 | 90-95% | Yes | 0.046 |
| 6071001101 | 4092 | San Bernardino | 91762 | Ontario | -117.6629921 | 34.0660715 | 54.37 | 92.67 | 90-95% | Yes | 0.062 |
| 6037228420 | 3150 | Los Angeles | 90011 | Los Angeles | -118.2718914 | 34.0082598 | 54.35 | 92.66 | 90-95% | Yes | 0.046 |
| 6037127210 | 5531 | Los Angeles | 91405 | Van Nuys | -118.4596472 | 34.2066365 | 54.34 | 92.65 | 90-95% | Yes | 0.055 |
| 6037531503 | 3116 | Los Angeles | 90063 | Los Angeles | -118.174744 | 34.0294089 | 54.32 | 92.63 | 90-95% | Yes | 0.046 |
| 6099001603 | 5706 | Stanislaus | 95351 | Modesto | -121.0267937 | 37.6150481 | 54.31 | 92.62 | 90-95% | Yes | 0.053 |
| 6037195720 | 2304 | Los Angeles | 90026 | Los Angeles | -118.2633783 | 34.0737627 | 54.30 | 92.61 | 90-95% | Yes | 0.046 |
| 6107000501 | 6712 | Tulare | 93618 | Dinuba | -119.3859943 | 36.5384542 | 54.26 | 92.60 | 90-95% | Yes | 0.065 |
| 6037603005 | 5591 | Los Angeles | 90247 | Gardena | -118.3047564 | 33.8982954 | 54.26 | 92.58 | 90-95% | Yes | 0.044 |
| 6037201402 | 4311 | Los Angeles | 90032 | Los Angeles | -118.1877681 | 34.0689106 | 54.25 | 92.57 | 90-95% | Yes | 0.046 |
| 6065041001 | 2832 | Riverside | 92503 | Riverside | -117.4643999 | 33.9496836 | 54.19 | 92.56 | 90-95% | Yes | 0.062 |
| 6019008301 | 5989 | Fresno | 93640 | Mendota | -120.398557 | 36.804879 | 54.18 | 92.55 | 90-95% | Yes | 0.057 |
| 6037190802 | 2784 | Los Angeles | 90028 | Los Angeles | -118.3299158 | 34.0943604 | 54.18 | 92.53 | 90-95% | Yes | 0.050 |
| 6071004202 | 5176 | San Bernardino | 92411 | San Bernardino | -117.3182081 | 34.1259545 | 54.15 | 92.52 | 90-95% | Yes | 0.065 |
| 6037540502 | 6552 | Los Angeles | 90262 | Lynwood | -118.2136057 | 33.915979 | 54.13 | 92.51 | 90-95% | Yes | 0.044 |
| 6037570404 | 3501 | Los Angeles | 90805 | Long Beach | -118.1959346 | 33.877496 | 54.04 | 92.50 | 90-95% | Yes | 0.042 |
| 6037236100 | 5265 | Los Angeles | 90008 | Los Angeles | -118.3402132 | 34.0126393 | 54.01 | 92.48 | 90-95% | Yes | 0.046 |
| 6037407701 | 5401 | Los Angeles | 91744 | La Puente | -117.9298385 | 34.013937 | 54.00 | 92.47 | 90-95% | Yes | 0.050 |
| 6013365002 | 5462 | Contra Costa | 94801 | Richmond | -122.3843954 | 37.9594657 | 54.00 | 92.46 | 90-95% | Yes | 0.030 |
| 6037531502 | 3273 | Los Angeles | 90022 | Los Angeles | -118.1708472 | 34.019891 | 54.00 | 92.45 | 90-95% | Yes | 0.046 |
| 6037433304 | 4726 | Los Angeles | 91732 | El Monte | -118.019896 | 34.0708986 | 53.96 | 92.43 | 90-95% | Yes | 0.050 |
| 6077002202 | 5417 | San Joaquin | 95206 | Stockton | -121.2572972 | 37.9333088 | 53.96 | 92.42 | 90-95% | Yes | 0.046 |
| 6071006401 | 3343 | San Bernardino | 92410 | San Bernardino | -117.2698942 | 34.1157719 | 53.95 | 92.41 | 90-95% | Yes | 0.065 |
| 6037291110 | 3510 | Los Angeles | 90044 | Los Angeles | -118.2868209 | 33.9200912 | 53.94 | 92.40 | 90-95% | Yes | 0.044 |
| 6037434003 | 4273 | Los Angeles | 91732 | El Monte | -118.0226938 | 34.0464413 | 53.90 | 92.38 | 90-95% | Yes | 0.048 |
| 6037206031 | 2957 | Los Angeles | 90021 | Los Angeles | -118.2331623 | 34.0320283 | 53.90 | 92.37 | 90-95% | Yes | 0.046 |
| 6037533300 | 3558 | Los Angeles | 90270 | Maywood | -118.2024051 | 33.9927923 | 53.89 | 92.36 | 90-95% | Yes | 0.046 |
| 6037240700 | 6161 | Los Angeles | 90002 | Los Angeles | -118.2593919 | 33.9470153 | 53.89 | 92.34 | 90-95% | Yes | 0.044 |
| 6037199900 | 2683 | Los Angeles | 90031 | Los Angeles | -118.2115758 | 34.0650794 | 53.88 | 92.33 | 90-95% | Yes | 0.046 |
| 6037535702 | 5522 | Los Angeles | 90280 | South Gate | -118.2050283 | 33.9542813 | 53.86 | 92.32 | 90-95% | Yes | 0.044 |
| 6099002702 | 6940 | Stanislaus | 95351 | Modesto | -120.9665381 | 37.6152295 | 53.86 | 92.31 | 90-95% | Yes | 0.053 |
| 6067006900 | 4763 | Sacramento | 95815 | Sacramento | -121.4578647 | 38.6018703 | 53.84 | 92.29 | 90-95% | Yes | 0.048 |
| 6037575803 | 2837 | Los Angeles | 90813 | Long Beach | -118.1937148 | 33.7789661 | 53.83 | 92.28 | 90-95% | Yes | 0.042 |
| 6037123301 | 4559 | Los Angeles | 91605 | North Hollywood | -118.4001225 | 34.2003101 | 53.81 | 92.27 | 90-95% | Yes | 0.055 |
| 6037302504 | 4234 | Los Angeles | 91205 | Glendale | -118.2491936 | 34.1351285 | 53.80 | 92.26 | 90-95% | Yes | 0.051 |
| 6085503105 | 2484 | Santa Clara | 95122 | San Jose | -121.858788 | 37.3262673 | 53.78 | 92.24 | 90-95% | Yes | 0.038 |
| 6037533703 | 4236 | Los Angeles | 90270 | Maywood | -118.1734078 | 33.9836095 | 53.76 | 92.23 | 90-95% | Yes | 0.046 |
| 6037209402 | 3728 | Los Angeles | 90057 | Los Angeles | -118.277221 | 34.0546619 | 53.74 | 92.22 | 90-95% | Yes | 0.046 |
| 6037502802 | 1380 | Los Angeles | 90670 | Santa Fe Springs | -118.0683234 | 33.9335661 | 53.72 | 92.21 | 90-95% | Yes | 0.046 |
| 6037228310 | 4449 | Los Angeles | 90011 | Los Angeles | -118.262416 | 34.011351 | 53.71 | 92.19 | 90-95% | Yes | 0.046 |
| 6037296600 | 5218 | Los Angeles | 90731 | San Pedro | -118.2923625 | 33.7397829 | 53.70 | 92.18 | 90-95% | Yes | 0.042 |
| 6037231400 | 4688 | Los Angeles | 90062 | Los Angeles | -118.3129995 | 34.0145548 | 53.70 | 92.17 | 90-95% | Yes | 0.046 |
| 6037402102 | 4815 | Los Angeles | 91767 | Pomona | -117.7464275 | 34.0844486 | 53.64 | 92.16 | 90-95% | Yes | 0.060 |
| 6013377000 | 6962 | Contra Costa | 94801 | Richmond | -122.3629548 | 37.9337832 | 53.63 | 92.14 | 90-95% | Yes | 0.030 |
| 6037570501 | 7419 | Los Angeles | 90805 | Long Beach | -118.1796736 | 33.8686923 | 53.62 | 92.13 | 90-95% | Yes | 0.042 |
| 6037402101 | 4623 | Los Angeles | 91767 | Pomona | -117.7337541 | 34.0860588 | 53.61 | 92.12 | 90-95% | Yes | 0.060 |
| 6037311801 | 3033 | Los Angeles | 91502 | Burbank | -118.306208 | 34.1661607 | 53.60 | 92.10 | 90-95% | Yes | 0.055 |
| 6037195710 | 4328 | Los Angeles | 90026 | Los Angeles | -118.2686024 | 34.0747292 | 53.59 | 92.09 | 90-95% | Yes | 0.046 |
| 6037433305 | 4893 | Los Angeles | 91732 | El Monte | -118.0127105 | 34.0703231 | 53.58 | 92.08 | 90-95% | Yes | 0.050 |
| 6037603704 | 6348 | Los Angeles | 90250 | Hawthorne | -118.3319132 | 33.9001056 | 53.57 | 92.07 | 90-95% | Yes | 0.044 |
| 6037602508 | 7022 | Los Angeles | 90250 | Hawthorne | -118.339504 | 33.9128073 | 53.55 | 92.05 | 90-95% | Yes | 0.044 |
| 6037534001 | 5613 | Los Angeles | 90201 | Bell | -118.1468675 | 33.9679322 | 53.54 | 92.04 | 90-95% | Yes | 0.046 |
| 6037241300 | 2313 | Los Angeles | 90044 | Los Angeles | -118.2862377 | 33.9261331 | 53.51 | 92.03 | 90-95% | Yes | 0.044 |
| 6037573300 | 4323 | Los Angeles | 90806 | Long Beach | -118.1757078 | 33.7932911 | 53.51 | 92.02 | 90-95% | Yes | 0.042 |
| 6071009117 | 8267 | San Bernardino | 92301 | Adelanto | -117.5205833 | 34.6306439 | 53.50 | 92.00 | 90-95% | Yes | 0.065 |
| 6037121801 | 3942 | Los Angeles | 91605 | North Hollywood | -118.3928771 | 34.2114871 | 53.46 | 91.99 | 90-95% | Yes | 0.055 |
| 6099000602 | 2953 | Stanislaus | 95351 | Modesto | -121.0307757 | 37.6547882 | 53.45 | 91.98 | 90-95% | Yes | 0.053 |
| 6037232110 | 3191 | Los Angeles | 90037 | Los Angeles | -118.2893178 | 33.9994947 | 53.45 | 91.97 | 90-95% | Yes | 0.046 |
| 6047002401 | 1756 | Merced | 93620 | Dos Palos | -120.6551864 | 37.0439737 | 53.44 | 91.95 | 90-95% | Yes | 0.055 |
| 6099000510 | 8480 | Stanislaus | 95358 | Modesto | -121.0809748 | 37.6930984 | 53.43 | 91.94 | 90-95% | Yes | 0.053 |
| 6037570603 | 4435 | Los Angeles | 90805 | Long Beach | -118.1623214 | 33.8571712 | 53.43 | 91.93 | 90-95% | Yes | 0.042 |
| 6065046500 | 9277 | Riverside | 92521 | Riverside | -117.3333516 | 33.9709379 | 53.41 | 91.92 | 90-95% | Yes | 0.065 |
| 6037302202 | 5254 | Los Angeles | 91205 | Glendale | -118.2485559 | 34.1407531 | 53.41 | 91.90 | 90-95% | Yes | 0.051 |
| 6037404801 | 7305 | Los Angeles | 91706 | Baldwin Park | -117.9773075 | 34.0785296 | 53.41 | 91.89 | 90-95% | Yes | 0.051 |
| 6037551800 | 7533 | Los Angeles | 90242 | Downey | -118.1260092 | 33.9131762 | 53.40 | 91.88 | 90-95% | Yes | 0.044 |
| 6037224420 | 2369 | Los Angeles | 90007 | Los Angeles | -118.2769037 | 34.0316495 | 53.36 | 91.87 | 90-95% | Yes | 0.046 |
| 6037535102 | 4517 | Los Angeles | 90002 | Los Angeles | -118.2488361 | 33.9587246 | 53.36 | 91.85 | 90-95% | Yes | 0.044 |
| 6037502004 | 4359 | Los Angeles | 90602 | Whittier | -118.0477889 | 33.9609046 | 53.34 | 91.84 | 90-95% | Yes | 0.046 |
| 6037231100 | 3350 | Los Angeles | 90007 | Los Angeles | -118.2765579 | 34.0152478 | 53.31 | 91.83 | 90-95% | Yes | 0.046 |
| 6037197500 | 3889 | Los Angeles | 90026 | Los Angeles | -118.2572428 | 34.0726632 | 53.27 | 91.81 | 90-95% | Yes | 0.046 |
| 6065042902 | 4930 | Riverside | 92570 | Perris | -117.3068214 | 33.7493426 | 53.27 | 91.80 | 90-95% | Yes | 0.062 |
| 6037533701 | 3934 | Los Angeles | 90270 | Maywood | -118.1820765 | 33.988846 | 53.27 | 91.79 | 90-95% | Yes | 0.046 |
| 6037576301 | 4176 | Los Angeles | 90813 | Long Beach | -118.1886964 | 33.7789685 | 53.26 | 91.78 | 90-95% | Yes | 0.042 |
| 6019002905 | 2889 | Fresno | 93727 | Fresno | -119.7272939 | 36.7539654 | 53.26 | 91.76 | 90-95% | Yes | 0.065 |
| 6037218210 | 4457 | Los Angeles | 90019 | Los Angeles | -118.3423056 | 34.0427907 | 53.23 | 91.75 | 90-95% | Yes | 0.048 |
| 6029001902 | 4679 | Kern | 93304 | Bakersfield | -119.0241678 | 35.3604639 | 53.21 | 91.74 | 90-95% | Yes | 0.065 |
| 6037204200 | 3303 | Los Angeles | 90033 | Los Angeles | -118.2050757 | 34.0436195 | 53.19 | 91.73 | 90-95% | Yes | 0.046 |
| 6037237201 | 3506 | Los Angeles | 90044 | Los Angeles | -118.2991149 | 33.9857256 | 53.19 | 91.71 | 90-95% | Yes | 0.046 |
| 6037530602 | 1590 | Los Angeles | 90063 | Los Angeles | -118.1716259 | 34.0527788 | 53.19 | 91.70 | 90-95% | Yes | 0.048 |

| | | | | | | | | | | | |
|---|---|---|---|---|---|---|---|---|---|---|---|
| 6037502100 | 5110 | Los Angeles | 90606 | Whittier | -118.0522351 | 33.9726429 | 53.18 | 91.69 | 90-95% | Yes | 0.046 |
| 6037533402 | 4105 | Los Angeles | 90270 | Maywood | -118.1951817 | 33.9898752 | 53.16 | 91.68 | 90-95% | Yes | 0.046 |
| 6037405101 | 5304 | Los Angeles | 91706 | Baldwin Park | -117.9616912 | 34.0958307 | 53.15 | 91.66 | 90-95% | Yes | 0.053 |
| 6037301502 | 6908 | Los Angeles | 91201 | Glendale | -118.2886611 | 34.1723661 | 53.14 | 91.65 | 90-95% | Yes | 0.055 |
| 6025012200 | 7804 | Imperial | 92231 | Calexico | -115.5143868 | 32.6730724 | 53.14 | 91.64 | 90-95% | Yes | 0.053 |
| 6071002402 | 8434 | San Bernardino | 92335 | Fontana | -117.4624252 | 34.0956686 | 53.11 | 91.63 | 90-95% | Yes | 0.065 |
| 6037219010 | 2814 | Los Angeles | 90018 | Los Angeles | -118.3229262 | 34.0276144 | 53.11 | 91.61 | 90-95% | Yes | 0.046 |
| 6029004402 | 5437 | Kern | 93280 | Wasco | -119.3337642 | 35.5917344 | 53.09 | 91.60 | 90-95% | Yes | 0.062 |
| 6065042901 | 7385 | Riverside | 92570 | Perris | -117.2517249 | 33.7488769 | 53.04 | 91.59 | 90-95% | Yes | 0.062 |
| 6037576302 | 4101 | Los Angeles | 90813 | Long Beach | -118.1828489 | 33.7789718 | 53.03 | 91.58 | 90-95% | Yes | 0.042 |
| 6037552302 | 3648 | Los Angeles | 90650 | Norwalk | -118.0577671 | 33.906522 | 53.02 | 91.56 | 90-95% | Yes | 0.046 |
| 6037542000 | 5732 | Los Angeles | 90221 | Compton | -118.2031731 | 33.9055367 | 53.02 | 91.55 | 90-95% | Yes | 0.044 |
| 6037207103 | 2077 | Los Angeles | 90012 | Los Angeles | -118.2392725 | 34.0644824 | 53.01 | 91.54 | 90-95% | Yes | 0.046 |
| 6037231500 | 4752 | Los Angeles | 90062 | Los Angeles | -118.3108266 | 34.0072777 | 53.01 | 91.52 | 90-95% | Yes | 0.046 |
| 6037575901 | 3454 | Los Angeles | 90802 | Long Beach | -118.2023757 | 33.7726916 | 52.97 | 91.51 | 90-95% | Yes | 0.042 |
| 6037190901 | 4742 | Los Angeles | 90038 | Los Angeles | -118.3124771 | 34.0944222 | 52.96 | 91.50 | 90-95% | Yes | 0.050 |
| 6099003803 | 3004 | Stanislaus | 95380 | Turlock | -120.8421053 | 37.4839984 | 52.95 | 91.49 | 90-95% | Yes | 0.057 |
| 6037121101 | 2932 | Los Angeles | 91352 | Sun Valley | -118.3654295 | 34.224417 | 52.91 | 91.47 | 90-95% | Yes | 0.055 |
| 6059086802 | 5913 | Orange | 92801 | Anaheim | -117.9689057 | 33.8453212 | 52.85 | 91.46 | 90-95% | Yes | 0.046 |
| 6037191620 | 2789 | Los Angeles | 90029 | Los Angeles | -118.3027253 | 34.0885866 | 52.82 | 91.45 | 90-95% | Yes | 0.048 |
| 6037124204 | 3071 | Los Angeles | 91601 | North Hollywood | -118.3746553 | 34.1739725 | 52.82 | 91.44 | 90-95% | Yes | 0.053 |
| 6037228500 | 5220 | Los Angeles | 90011 | Los Angeles | -118.2690648 | 34.0034919 | 52.80 | 91.42 | 90-95% | Yes | 0.046 |
| 6037533702 | 3585 | Los Angeles | 90270 | Maywood | -118.1827053 | 33.9835573 | 52.80 | 91.41 | 90-95% | Yes | 0.046 |
| 6037231600 | 7110 | Los Angeles | 90037 | Los Angeles | -118.2980319 | 34.0072734 | 52.79 | 91.40 | 90-95% | Yes | 0.046 |
| 6037201700 | 5093 | Los Angeles | 90032 | Los Angeles | -118.1708887 | 34.0674315 | 52.79 | 91.39 | 90-95% | Yes | 0.048 |
| 6047001601 | 4498 | Merced | 95341 | Merced | -120.4768042 | 37.2916307 | 52.79 | 91.37 | 90-95% | Yes | 0.057 |
| 6019006602 | 5597 | Fresno | 93654 | Reedley | -119.4402301 | 36.5908573 | 52.78 | 91.36 | 90-95% | Yes | 0.065 |
| 6071001812 | 4321 | San Bernardino | 91761 | Ontario | -117.6470474 | 34.0429101 | 52.72 | 91.35 | 90-95% | Yes | 0.062 |
| 6037211122 | 3075 | Los Angeles | 90004 | Los Angeles | -118.2892234 | 34.0726794 | 52.70 | 91.34 | 90-95% | Yes | 0.048 |
| 6037407200 | 7315 | Los Angeles | 91744 | La Puente | -117.9597817 | 34.0335496 | 52.69 | 91.32 | 90-95% | Yes | 0.050 |
| 6029003000 | 7374 | Kern | 93304 | Bakersfield | -119.0121142 | 35.3321914 | 52.69 | 91.31 | 90-95% | Yes | 0.065 |
| 6037543306 | 7214 | Los Angeles | 90745 | Carson | -118.2427443 | 33.8342784 | 52.69 | 91.30 | 90-95% | Yes | 0.042 |
| 6037211320 | 3184 | Los Angeles | 90004 | Los Angeles | -118.2941394 | 34.0708715 | 52.69 | 91.29 | 90-95% | Yes | 0.048 |
| 6037218300 | 5520 | Los Angeles | 90019 | Los Angeles | -118.3548171 | 34.0427467 | 52.68 | 91.27 | 90-95% | Yes | 0.048 |
| 6037301701 | 2849 | Los Angeles | 91202 | Glendale | -118.2746677 | 34.1584908 | 52.67 | 91.26 | 90-95% | Yes | 0.053 |
| 6107004200 | 6529 | Tulare | 93256 | Pixley | -119.2918483 | 35.9647863 | 52.66 | 91.25 | 90-95% | Yes | 0.062 |
| 6037600502 | 2355 | Los Angeles | 90303 | Inglewood | -118.3307284 | 33.9280513 | 52.62 | 91.23 | 90-95% | Yes | 0.044 |
| 6099000805 | 6188 | Stanislaus | 95350 | Modesto | -121.0216617 | 37.6764076 | 52.59 | 91.22 | 90-95% | Yes | 0.053 |
| 6107000302 | 3427 | Tulare | 93631 | Kingsburg | -119.4468987 | 36.4518121 | 52.59 | 91.21 | 90-95% | Yes | 0.062 |
| 6037531000 | 5629 | Los Angeles | 90063 | Los Angeles | -118.1739023 | 34.0407632 | 52.58 | 91.20 | 90-95% | Yes | 0.046 |
| 6059087405 | 5912 | Orange | 92805 | Anaheim | -117.9110788 | 33.8211215 | 52.58 | 91.18 | 90-95% | Yes | 0.046 |
| 6037296500 | 3910 | Los Angeles | 90731 | San Pedro | -118.2927139 | 33.7480876 | 52.54 | 91.17 | 90-95% | Yes | 0.042 |
| 6001407300 | 2598 | Alameda | 94601 | Oakland | -122.2109235 | 37.7621786 | 52.54 | 91.16 | 90-95% | Yes | 0.030 |
| 6037432601 | 6564 | Los Angeles | 91732 | El Monte | -118.0143396 | 34.0820032 | 52.53 | 91.15 | 90-95% | Yes | 0.050 |
| 6059001202 | 3586 | Orange | 90631 | La Habra | -117.9434406 | 33.9331436 | 52.52 | 91.13 | 90-95% | Yes | 0.046 |
| 6077000402 | 4582 | San Joaquin | 95202 | Stockton | -121.2901386 | 37.9640353 | 52.48 | 91.12 | 90-95% | Yes | 0.046 |
| 6037534501 | 5201 | Los Angeles | 90255 | Huntington Park | -118.207662 | 33.9677268 | 52.47 | 91.11 | 90-95% | Yes | 0.046 |
| 6067004501 | 3529 | Sacramento | 95824 | Sacramento | -121.4711734 | 38.5180285 | 52.47 | 91.10 | 90-95% | Yes | 0.048 |
| 6037540203 | 5594 | Los Angeles | 90262 | Lynwood | -118.2043891 | 33.9275094 | 52.38 | 91.08 | 90-95% | Yes | 0.044 |
| 6059074003 | 3137 | Orange | 92707 | Santa Ana | -117.8625381 | 33.7086987 | 52.37 | 91.07 | 90-95% | Yes | 0.046 |
| 6037533403 | 2973 | Los Angeles | 90270 | Maywood | -118.1871993 | 33.9879399 | 52.33 | 91.06 | 90-95% | Yes | 0.046 |
| 6037199400 | 4668 | Los Angeles | 90031 | Los Angeles | -118.2093313 | 34.0896162 | 52.32 | 91.05 | 90-95% | Yes | 0.046 |
| 6037433200 | 6163 | Los Angeles | 91731 | El Monte | -118.0367895 | 34.0678011 | 52.29 | 91.03 | 90-95% | Yes | 0.050 |
| 6037542900 | 3285 | Los Angeles | 90220 | Compton | -118.2453652 | 33.8918787 | 52.28 | 91.02 | 90-95% | Yes | 0.044 |
| 6067005002 | 6284 | Sacramento | 95823 | Sacramento | -121.4265186 | 38.4848798 | 52.27 | 91.01 | 90-95% | Yes | 0.048 |
| 6037402405 | 3006 | Los Angeles | 91768 | Pomona | -117.7929465 | 34.0671411 | 52.26 | 91.00 | 90-95% | Yes | 0.057 |
| 6037541300 | 6044 | Los Angeles | 90222 | Compton | -118.2410907 | 33.911833 | 52.26 | 90.98 | 90-95% | Yes | 0.044 |
| 6037573003 | 1802 | Los Angeles | 90806 | Long Beach | -118.2020691 | 33.7943972 | 52.24 | 90.97 | 90-95% | Yes | 0.042 |
| 6037228410 | 3320 | Los Angeles | 90011 | Los Angeles | -118.2691132 | 34.01374 | 52.20 | 90.96 | 90-95% | Yes | 0.046 |
| 6071001307 | 4163 | San Bernardino | 91764 | Ontario | -117.6198734 | 34.0885081 | 52.20 | 90.94 | 90-95% | Yes | 0.062 |
| 6059086502 | 6551 | Orange | 92801 | Anaheim | -117.9100305 | 33.8476162 | 52.18 | 90.93 | 90-95% | Yes | 0.046 |
| 6019005202 | 3619 | Fresno | 93726 | Fresno | -119.7439756 | 36.7873266 | 52.17 | 90.92 | 90-95% | Yes | 0.065 |
| 6037535607 | 4775 | Los Angeles | 90280 | South Gate | -118.2211115 | 33.9419439 | 52.15 | 90.91 | 90-95% | Yes | 0.044 |
| 6047002000 | 7835 | Merced | 95322 | Gustine | -120.9591276 | 37.2000819 | 52.13 | 90.89 | 90-95% | Yes | 0.053 |
| 6071004302 | 4413 | San Bernardino | 92411 | San Bernardino | -117.3310918 | 34.1121388 | 52.11 | 90.88 | 90-95% | Yes | 0.065 |
| 6037191720 | 3770 | Los Angeles | 90038 | Los Angeles | -118.3123611 | 34.0887897 | 52.10 | 90.87 | 90-95% | Yes | 0.050 |
| 6037186403 | 2899 | Los Angeles | 90065 | Los Angeles | -118.2394938 | 34.1118266 | 52.09 | 90.86 | 90-95% | Yes | 0.048 |
| 6037132101 | 4259 | Los Angeles | 91406 | Van Nuys | -118.4956552 | 34.1902625 | 52.08 | 90.84 | 90-95% | Yes | 0.057 |
| 6037540501 | 6943 | Los Angeles | 90262 | Lynwood | -118.2193043 | 33.9247083 | 52.07 | 90.83 | 90-95% | Yes | 0.044 |
| 6065045303 | 3035 | Riverside | 92201 | Indio | -116.2114685 | 33.7247482 | 52.07 | 90.82 | 90-95% | Yes | 0.062 |
| 6067007301 | 4644 | Sacramento | 95652 | McClellan | -121.3980764 | 38.662725 | 52.07 | 90.81 | 90-95% | Yes | 0.051 |
| 6037240800 | 4377 | Los Angeles | 90002 | Los Angeles | -118.261893 | 33.9397052 | 52.05 | 90.79 | 90-95% | Yes | 0.044 |
| 6065042620 | 10463 | Riverside | 92571 | Perris | -117.2048878 | 33.8306663 | 52.05 | 90.78 | 90-95% | Yes | 0.065 |
| 6037222002 | 4655 | Los Angeles | 90018 | Los Angeles | -118.3132782 | 34.0218914 | 52.03 | 90.77 | 90-95% | Yes | 0.046 |
| 6037204300 | 4787 | Los Angeles | 90033 | Los Angeles | -118.2078724 | 34.0387492 | 52.02 | 90.76 | 90-95% | Yes | 0.046 |
| 6067004702 | 4945 | Sacramento | 95823 | Sacramento | -121.4469045 | 38.5068873 | 52.01 | 90.74 | 90-95% | Yes | 0.048 |
| 6037209102 | 5267 | Los Angeles | 90017 | Los Angeles | -118.2675212 | 34.0551862 | 52.00 | 90.73 | 90-95% | Yes | 0.046 |
| 6037124201 | 3506 | Los Angeles | 91606 | North Hollywood | -118.3746763 | 34.1848664 | 51.93 | 90.72 | 90-95% | Yes | 0.055 |
| 6037301702 | 5556 | Los Angeles | 91203 | Glendale | -118.2691593 | 34.1511527 | 51.93 | 90.71 | 90-95% | Yes | 0.051 |
| 6037191201 | 4591 | Los Angeles | 90027 | Los Angeles | -118.2961735 | 34.0985767 | 51.90 | 90.69 | 90-95% | Yes | 0.050 |
| 6037199800 | 5631 | Los Angeles | 90031 | Los Angeles | -118.2103403 | 34.0706563 | 51.89 | 90.68 | 90-95% | Yes | 0.046 |
| 6037240010 | 3673 | Los Angeles | 90002 | Los Angeles | -118.2637832 | 33.9583159 | 51.88 | 90.67 | 90-95% | Yes | 0.044 |
| 6025011500 | 6232 | Imperial | 92243 | El Centro | -115.561293 | 32.7984899 | 51.87 | 90.65 | 90-95% | Yes | 0.055 |
| 6037533804 | 4543 | Los Angeles | 90201 | Bell | -118.1791444 | 33.9752181 | 51.84 | 90.64 | 90-95% | Yes | 0.046 |
| 6037543903 | 3804 | Los Angeles | 90745 | Carson | -118.2576884 | 33.8296613 | 51.84 | 90.63 | 90-95% | Yes | 0.042 |
| 6037433306 | 3333 | Los Angeles | 91732 | El Monte | -118.0077568 | 34.0715068 | 51.80 | 90.62 | 90-95% | Yes | 0.050 |
| 6037602103 | 6992 | Los Angeles | 90250 | Hawthorne | -118.3567382 | 33.9283066 | 51.78 | 90.60 | 90-95% | Yes | 0.044 |
| 6071000201 | 4195 | San Bernardino | 91763 | Montclair | -117.6958376 | 34.0892501 | 51.78 | 90.59 | 90-95% | Yes | 0.060 |
| 6037197700 | 5103 | Los Angeles | 90012 | Los Angeles | -118.2457754 | 34.0685435 | 51.77 | 90.58 | 90-95% | Yes | 0.046 |
| 6037553902 | 5809 | Los Angeles | 90723 | Paramount | -118.153083 | 33.8851416 | 51.76 | 90.57 | 90-95% | Yes | 0.044 |
| 6037310703 | 5114 | Los Angeles | 91502 | Burbank | -118.3002133 | 34.1758933 | 51.73 | 90.55 | 90-95% | Yes | 0.055 |
| 6037240020 | 5055 | Los Angeles | 90002 | Los Angeles | -118.2638081 | 33.9542444 | 51.73 | 90.54 | 90-95% | Yes | 0.044 |
| 6037502700 | 6956 | Los Angeles | 90670 | Santa Fe Springs | -118.0716366 | 33.9548068 | 51.71 | 90.53 | 90-95% | Yes | 0.046 |
| 6019002903 | 4329 | Fresno | 93727 | Fresno | -119.7273086 | 36.7395376 | 51.70 | 90.52 | 90-95% | Yes | 0.065 |
| 6037219020 | 4798 | Los Angeles | 90018 | Los Angeles | -118.3226729 | 34.0222083 | 51.69 | 90.50 | 90-95% | Yes | 0.046 |
| 6065041704 | 3908 | Riverside | 92882 | Corona | -117.5781628 | 33.8770106 | 51.65 | 90.49 | 90-95% | Yes | 0.060 |
| 6037125320 | 4843 | Los Angeles | 91601 | North Hollywood | -118.3701944 | 34.1666765 | 51.63 | 90.48 | 90-95% | Yes | 0.053 |
| 6037602104 | 5416 | Los Angeles | 90250 | Hawthorne | -118.3483855 | 33.9278066 | 51.62 | 90.47 | 90-95% | Yes | 0.044 |
| 6019003003 | 4154 | Fresno | 93727 | Fresno | -119.7091535 | 36.7395013 | 51.60 | 90.45 | 90-95% | Yes | 0.065 |
| 6067006400 | 5347 | Sacramento | 95838 | Sacramento | -121.420238 | 38.6416454 | 51.58 | 90.44 | 90-95% | Yes | 0.050 |
| 6075023103 | 3725 | San Francisco | 94124 | San Francisco | -122.3759653 | 37.7356318 | 51.58 | 90.43 | 90-95% | Yes | 0.030 |
| 6037540102 | 6972 | Los Angeles | 90262 | Lynwood | -118.1941847 | 33.9231953 | 51.57 | 90.41 | 90-95% | Yes | 0.044 |
| 6037573202 | 6230 | Los Angeles | 90806 | Long Beach | -118.1850191 | 33.7934864 | 51.56 | 90.40 | 90-95% | Yes | 0.042 |
| 6037575201 | 4667 | Los Angeles | 90813 | Long Beach | -118.1767949 | 33.7864873 | 51.55 | 90.39 | 90-95% | Yes | 0.042 |
| 6037554301 | 3554 | Los Angeles | 90706 | Bellflower | -118.1456075 | 33.8822564 | 51.53 | 90.38 | 90-95% | Yes | 0.044 |
| 6037231900 | 5968 | Los Angeles | 90037 | Los Angeles | -118.2773419 | 33.9997716 | 51.50 | 90.36 | 90-95% | Yes | 0.046 |
| 6037532604 | 2806 | Los Angeles | 90255 | Huntington Park | -118.2289994 | 33.9842406 | 51.48 | 90.35 | 90-95% | Yes | 0.046 |
| 6037127920 | 4100 | Los Angeles | 91405 | Van Nuys | -118.4356225 | 34.1975655 | 51.47 | 90.34 | 90-95% | Yes | 0.055 |
| 6037553504 | 5368 | Los Angeles | 90723 | Paramount | -118.1554579 | 33.9067419 | 51.47 | 90.33 | 90-95% | Yes | 0.044 |
| 6037533201 | 2805 | Los Angeles | 90255 | Huntington Park | -118.2081561 | 33.9819143 | 51.46 | 90.31 | 90-95% | Yes | 0.046 |
| 6001409500 | 3122 | Alameda | 94621 | Oakland | -122.1837659 | 37.7504463 | 51.44 | 90.30 | 90-95% | Yes | 0.030 |
| 6071000825 | 3905 | San Bernardino | 91786 | Upland | -117.6755256 | 34.0916975 | 51.44 | 90.29 | 90-95% | Yes | 0.062 |
| 6019006501 | 6662 | Fresno | 93654 | Reedley | -119.3447256 | 36.608683 | 51.43 | 90.28 | 90-95% | Yes | 0.065 |
| 6073003603 | 4228 | San Diego | 92113 | San Diego | -117.1075924 | 32.6866623 | 51.41 | 90.26 | 90-95% | Yes | 0.038 |
| 6037127103 | 2939 | Los Angeles | 91405 | Van Nuys | -118.4301703 | 34.2043745 | 51.40 | 90.25 | 90-95% | Yes | 0.055 |
| 6071006301 | 5324 | San Bernardino | 92404 | San Bernardino | -117.2682467 | 34.1303051 | 51.39 | 90.24 | 90-95% | Yes | 0.065 |
| 6037502200 | 6585 | Los Angeles | 90606 | Whittier | -118.0729448 | 33.9775294 | 51.39 | 90.23 | 90-95% | Yes | 0.046 |
| 6037120030 | 2675 | Los Angeles | 91402 | Panorama City | -118.451843 | 34.2152447 | 51.35 | 90.21 | 90-95% | Yes | 0.055 |
| 6019001600 | 5099 | Fresno | 93625 | Fowler | -119.6486262 | 36.6433218 | 51.33 | 90.20 | 90-95% | Yes | 0.065 |
| 6071001310 | 5814 | San Bernardino | 91764 | Ontario | -117.6368989 | 34.0780739 | 51.32 | 90.19 | 90-95% | Yes | 0.062 |
| 6037240402 | 3854 | Los Angeles | 90044 | Los Angeles | -118.2854788 | 33.9446893 | 51.31 | 90.18 | 90-95% | Yes | 0.044 |
| 6019007004 | 5520 | Fresno | 93662 | Selma | -119.5900857 | 36.5770545 | 51.29 | 90.16 | 90-95% | Yes | 0.065 |
| 6037224600 | 3425 | Los Angeles | 90007 | Los Angeles | -118.2718023 | 34.0222989 | 51.28 | 90.15 | 90-95% | Yes | 0.046 |
| 6037575902 | 4762 | Los Angeles | 90802 | Long Beach | -118.1952012 | 33.7723157 | 51.28 | 90.14 | 90-95% | Yes | 0.042 |
| 6071009500 | 7094 | San Bernardino | 92311 | Barstow | -117.0264601 | 34.8906325 | 51.28 | 90.12 | 90-95% | Yes | 0.060 |
| 6065048800 | 4512 | Riverside | 92551 | Moreno Valley | -117.222383 | 33.870776 | 51.24 | 90.11 | 90-95% | Yes | 0.065 |
| 6071007603 | 4605 | San Bernardino | 92346 | Highland | -117.2199119 | 34.1151431 | 51.24 | 90.10 | 90-95% | Yes | 0.068 |
| 6037191120 | 4135 | Los Angeles | 90029 | Los Angeles | -118.304794 | 34.0929287 | 51.24 | 90.09 | 90-95% | Yes | 0.050 |
| 6113010102 | 7702 | Yolo | 95837 | Sacramento | -121.6242082 | 38.7208477 | 51.23 | 90.07 | 90-95% | Yes | 0.048 |
| 6065031601 | 4390 | Riverside | 92503 | Riverside | -117.4486421 | 33.9154288 | 51.22 | 90.06 | 90-95% | Yes | 0.062 |
| 6037125310 | 4750 | Los Angeles | 91601 | North Hollywood | -118.366031 | 34.1695168 | 51.22 | 90.05 | 90-95% | Yes | 0.053 |
| 6107004102 | 2028 | Tulare | 93257 | Porterville | -119.0245203 | 36.0455672 | 51.20 | 90.04 | 90-95% | Yes | 0.065 |
| 6047000505 | 6156 | Merced | 95301 | Atwater | -120.6497408 | 37.3574463 | 51.19 | 90.02 | 90-95% | Yes | 0.057 |
| 6037542103 | 4114 | Los Angeles | 90221 | Compton | -118.196493 | 33.9012219 | 51.19 | 90.01 | 90-95% | Yes | 0.044 |
| 6037240300 | 5691 | Los Angeles | 90044 | Los Angeles | -118.2861229 | 33.9564095 | 51.18 | 90.00 | 85-90% | Yes | 0.046 |
| 6071000203 | 4474 | San Bernardino | 91763 | Montclair | -117.7025669 | 34.078049 | 51.17 | 89.99 | 85-90% | Yes | 0.060 |
| 6037218120 | 4530 | Los Angeles | 90019 | Los Angeles | -118.3206759 | 34.0435631 | 51.17 | 89.97 | 85-90% | Yes | 0.048 |
| 6037220000 | 5345 | Los Angeles | 90016 | Los Angeles | -118.3401928 | 34.0278406 | 51.17 | 89.96 | 85-90% | Yes | 0.046 |
| 6037482402 | 6971 | Los Angeles | 91770 | Rosemead | -118.0800883 | 34.0489168 | 51.16 | 89.95 | 85-90% | Yes | 0.048 |
| 6037104810 | 5328 | Los Angeles | 91331 | Pacoima | -118.4111792 | 34.2502996 | 51.15 | 89.94 | 85-90% | Yes | 0.055 |
| 6077000500 | 2749 | San Joaquin | 95205 | Stockton | -121.2768386 | 37.9626057 | 51.15 | 89.92 | 85-90% | Yes | 0.046 |
| 6037201501 | 5306 | Los Angeles | 90032 | Los Angeles | -118.1646555 | 34.0865636 | 51.12 | 89.91 | 85-90% | Yes | 0.048 |
| 6065040501 | 6878 | Riverside | 92509 | Riverside | -117.4773497 | 34.0075778 | 51.11 | 89.90 | 85-90% | Yes | 0.062 |
| 6067007413 | 5932 | Sacramento | 95821 | Sacramento | -121.3933099 | 38.6420403 | 51.10 | 89.89 | 85-90% | Yes | 0.051 |
| 6099002504 | 4422 | Stanislaus | 95307 | Ceres | -120.9697851 | 37.5921181 | 51.10 | 89.87 | 85-90% | Yes | 0.053 |
| 6019003202 | 5265 | Fresno | 93703 | Fresno | -119.7431686 | 36.7687041 | 51.10 | 89.86 | 85-90% | Yes | 0.065 |
| 6071007305 | 4060 | San Bernardino | 92354 | Loma Linda | -117.2531226 | 34.0583656 | 51.09 | 89.85 | 85-90% | Yes | 0.068 |
| 6037224200 | 2392 | Los Angeles | 90015 | Los Angeles | -118.2767157 | 34.0406231 | 51.09 | 89.83 | 85-90% | Yes | 0.046 |
| 6037228320 | 3219 | Los Angeles | 90011 | Los Angeles | -118.2636361 | 34.0078219 | 51.08 | 89.82 | 85-90% | Yes | 0.046 |
| 6107000900 | 8171 | Tulare | 93291 | Visalia | -119.3858168 | 36.3926684 | 51.07 | 89.81 | 85-90% | Yes | 0.060 |
| 6037573002 | 3990 | Los Angeles | 90806 | Long Beach | -118.1915444 | 33.793484 | 51.06 | 89.80 | 85-90% | Yes | 0.042 |
| 6037294610 | 4065 | Los Angeles | 90744 | Wilmington | -118.2581968 | 33.787324 | 51.01 | 89.78 | 85-90% | Yes | 0.042 |
| 6037311802 | 3813 | Los Angeles | 91502 | Burbank | -118.3112874 | 34.1710001 | 50.99 | 89.77 | 85-90% | Yes | 0.055 |
| 6067001101 | 2047 | Sacramento | 95814 | Sacramento | -121.4904629 | 38.5772072 | 50.98 | 89.76 | 85-90% | Yes | 0.046 |
| 6075980600 | 467 | San Francisco | 94124 | San Francisco | -122.3685424 | 37.7231655 | 50.95 | 89.75 | 85-90% | Yes | 0.030 |
| 6029004102 | 5451 | Kern | 93263 | Shafter | -119.2738672 | 35.4961858 | 50.93 | 89.73 | 85-90% | Yes | 0.062 |
| 6037402904 | 3603 | Los Angeles | 91766 | Pomona | -117.7362111 | 34.0260693 | 50.92 | 89.72 | 85-90% | Yes | 0.057 |
| 6039000201 | 9049 | Madera | 93610 | Chowchilla | -120.1431313 | 37.0986965 | 50.88 | 89.71 | 85-90% | Yes | 0.060 |
| 6037128400 | 4114 | Los Angeles | 91411 | Van Nuys | -118.4588522 | 34.1765494 | 50.87 | 89.70 | 85-90% | Yes | 0.055 |
| 6073004000 | 5160 | San Diego | 92102 | San Diego | -117.127118 | 32.708779 | 50.87 | 89.68 | 85-90% | Yes | 0.038 |
| 6059001304 | 3803 | Orange | 90631 | La Habra | -117.945541 | 33.9244375 | 50.86 | 89.67 | 85-90% | Yes | 0.046 |
| 6037531701 | 5718 | Los Angeles | 90022 | Los Angeles | -118.1520851 | 34.0216887 | 50.85 | 89.66 | 85-90% | Yes | 0.046 |
| 6037542105 | 5200 | Los Angeles | 90221 | Compton | -118.199065 | 33.8932111 | 50.85 | 89.65 | 85-90% | Yes | 0.044 |
| 6037408501 | 3314 | Los Angeles | 91745 | Hacienda Heights | -117.9679168 | 34.0114015 | 50.84 | 89.63 | 85-90% | Yes | 0.050 |
| 6019003701 | 3314 | Fresno | 93705 | Fresno | -119.8255712 | 36.7686654 | 50.80 | 89.62 | 85-90% | Yes | 0.062 |
| 6077005109 | 4016 | San Joaquin | 95336 | Manteca | -121.210707 | 37.798966 | 50.79 | 89.61 | 85-90% | Yes | 0.051 |
| 6037600303 | 3664 | Los Angeles | 90044 | Los Angeles | -118.2983324 | 33.9355949 | 50.76 | 89.60 | 85-90% | Yes | 0.044 |
| 6037210010 | 3520 | Los Angeles | 90015 | Los Angeles | -118.2723121 | 34.046851 | 50.75 | 89.58 | 85-90% | Yes | 0.046 |
| 6037232800 | 3823 | Los Angeles | 90037 | Los Angeles | -118.2771882 | 33.9923979 | 50.73 | 89.57 | 85-90% | Yes | 0.046 |
| 6037601501 | 3890 | Los Angeles | 90304 | Inglewood | -118.3633462 | 33.9436514 | 50.70 | 89.56 | 85-90% | Yes | 0.044 |
| 6037122120 | 5000 | Los Angeles | 91352 | Sun Valley | -118.3719094 | 34.2107757 | 50.69 | 89.54 | 85-90% | Yes | 0.055 |
| 6085512602 | 2997 | Santa Clara | 95020 | Gilroy | -121.5244284 | 37.018124 | 50.69 | 89.53 | 85-90% | Yes | 0.040 |
| 6019001411 | 5276 | Fresno | 93727 | Fresno | -119.6911738 | 36.7433669 | 50.68 | 89.52 | 85-90% | Yes | 0.065 |
| 6099002503 | 4368 | Stanislaus | 95307 | Ceres | -120.9580147 | 37.584981 | 50.63 | 89.51 | 85-90% | Yes | 0.055 |
| 6037192610 | 4389 | Los Angeles | 90004 | Los Angeles | -118.2961539 | 34.081365 | 50.62 | 89.49 | 85-90% | Yes | 0.048 |
| 6037433401 | 3371 | Los Angeles | 91733 | South El Monte | -118.0426123 | 34.0596017 | 50.61 | 89.48 | 85-90% | Yes | 0.048 |
| 6037600304 | 3424 | Los Angeles | 90044 | Los Angeles | -118.2940128 | 33.9353608 | 50.61 | 89.47 | 85-90% | Yes | 0.044 |
| 6065042300 | 6782 | Riverside | 92507 | Riverside | -117.3222236 | 34.0130557 | 50.58 | 89.46 | 85-90% | Yes | 0.065 |
| 6037601402 | 5059 | Los Angeles | 90301 | Inglewood | -118.3657334 | 33.9509443 | 50.57 | 89.44 | 85-90% | Yes | 0.046 |
| 6037575102 | 4510 | Los Angeles | 90804 | Long Beach | -118.1621912 | 33.7844124 | 50.56 | 89.43 | 85-90% | Yes | 0.042 |
| 6065042510 | 5048 | Riverside | 92553 | Moreno Valley | -117.2393048 | 33.9100517 | 50.56 | 89.42 | 85-90% | Yes | 0.065 |
| 6111002905 | 5478 | Ventura | 93030 | Oxnard | -119.2319857 | 34.2098935 | 50.56 | 89.41 | 85-90% | Yes | 0.044 |
| 6037191500 | 5551 | Los Angeles | 90029 | Los Angeles | -118.296037 | 34.0872608 | 50.55 | 89.39 | 85-90% | Yes | 0.048 |
| 6099000301 | 1987 | Stanislaus | 95367 | Riverbank | -120.9332632 | 37.7365093 | 50.55 | 89.38 | 85-90% | Yes | 0.053 |
| 6047002302 | 13709 | Merced | 93635 | Los Banos | -120.8012173 | 37.0786355 | 50.53 | 89.37 | 85-90% | Yes | 0.053 |
| 6037123103 | 4165 | Los Angeles | 91606 | North Hollywood | -118.365403 | 34.192132 | 50.52 | 89.36 | 85-90% | Yes | 0.055 |
| 6037405201 | 5205 | Los Angeles | 91706 | Baldwin Park | -117.9513657 | 34.0839121 | 50.50 | 89.34 | 85-90% | Yes | 0.053 |
| 6037232200 | 3119 | Los Angeles | 90037 | Los Angeles | -118.2978735 | 34.0017243 | 50.49 | 89.33 | 85-90% | Yes | 0.046 |
| 6107004300 | 7682 | Tulare | 93219 | Earlimart | -119.3058575 | 35.8580543 | 50.48 | 89.32 | 85-90% | Yes | 0.062 |
| 6037408630 | 2319 | Los Angeles | 91745 | Hacienda Heights | -117.9561887 | 34.006504 | 50.47 | 89.31 | 85-90% | Yes | 0.050 |
| 6067000600 | 1122 | Sacramento | 95814 | Sacramento | -121.4916773 | 38.5854811 | 50.46 | 89.29 | 85-90% | Yes | 0.046 |
| 6065040502 | 6202 | Riverside | 92509 | Riverside | -117.4882782 | 34.0225503 | 50.46 | 89.28 | 85-90% | Yes | 0.062 |
| 6037123510 | 4753 | Los Angeles | 91405 | Van Nuys | -118.4290714 | 34.1953384 | 50.45 | 89.27 | 85-90% | Yes | 0.055 |
| 6037553502 | 4183 | Los Angeles | 90723 | Paramount | -118.1515696 | 33.899999 | 50.44 | 89.25 | 85-90% | Yes | 0.044 |
| 6037530101 | 5400 | Los Angeles | 90640 | Montebello | -118.0998041 | 34.0116507 | 50.44 | 89.24 | 85-90% | Yes | 0.046 |
| 6067005001 | 8107 | Sacramento | 95828 | Sacramento | -121.4173852 | 38.4893046 | 50.44 | 89.23 | 85-90% | Yes | 0.048 |
| 6037532002 | 3151 | Los Angeles | 90640 | Montebello | -118.1174056 | 34.0035288 | 50.39 | 89.22 | 85-90% | Yes | 0.046 |
| 6075023200 | 4582 | San Francisco | 94124 | San Francisco | -122.3861386 | 37.7277547 | 50.36 | 89.20 | 85-90% | Yes | 0.030 |
| 6019005100 | 5723 | Fresno | 93726 | Fresno | -119.7814652 | 36.7868839 | 50.34 | 89.19 | 85-90% | Yes | 0.065 |
| 6037221810 | 2773 | Los Angeles | 90007 | Los Angeles | -118.2923015 | 34.0306568 | 50.33 | 89.18 | 85-90% | Yes | 0.046 |
| 6037601211 | 2823 | Los Angeles | 90301 | Inglewood | -118.357722 | 33.962383 | 50.32 | 89.17 | 85-90% | Yes | 0.046 |
| 6037123420 | 4638 | Los Angeles | 91606 | North Hollywood | -118.4146718 | 34.193033 | 50.30 | 89.15 | 85-90% | Yes | 0.055 |
| 6037433601 | 4923 | Los Angeles | 91770 | Rosemead | -118.0761336 | 34.0670912 | 50.29 | 89.14 | 85-90% | Yes | 0.048 |
| 6001406000 | 3450 | Alameda | 94606 | Oakland | -122.246184 | 37.7875675 | 50.28 | 89.13 | 85-90% | Yes | 0.030 |
| 6059086702 | 7094 | Orange | 92801 | Anaheim | -117.9482327 | 33.843269 | 50.28 | 89.12 | 85-90% | Yes | 0.046 |
| 6025011300 | 10460 | Imperial | 92243 | El Centro | -115.4937382 | 32.775654 | 50.27 | 89.10 | 85-90% | Yes | 0.055 |
| 6037203200 | 4844 | Los Angeles | 90033 | Los Angeles | -118.1968646 | 34.0526028 | 50.27 | 89.09 | 85-90% | Yes | 0.046 |
| 6037104404 | 3236 | Los Angeles | 91331 | Pacoima | -118.4286916 | 34.2639207 | 50.26 | 89.08 | 85-90% | Yes | 0.057 |
| 6047002402 | 7505 | Merced | 93620 | Dos Palos | -120.6220705 | 36.9746245 | 50.24 | 89.07 | 85-90% | Yes | 0.055 |
| 6071002704 | 10787 | San Bernardino | 92377 | Rialto | -117.430224 | 34.1528486 | 50.24 | 89.05 | 85-90% | Yes | 0.065 |
| 6031001601 | 4516 | Kings | 93239 | Kettleman City | -119.7891118 | 36.01376 | 50.24 | 89.04 | 85-90% | Yes | 0.060 |
| 6013382000 | 6964 | Contra Costa | 94804 | Richmond | -122.3229975 | 37.9159913 | 50.24 | 89.03 | 85-90% | Yes | 0.030 |
| 6059074405 | 5820 | Orange | 92701 | Santa Ana | -117.8596881 | 33.7522099 | 50.23 | 89.02 | 85-90% | Yes | 0.046 |
| 6029000200 | 7644 | Kern | 93308 | Bakersfield | -119.0360588 | 35.4163342 | 50.22 | 89.00 | 85-90% | Yes | 0.062 |
| 6037185310 | 3061 | Los Angeles | 90065 | Los Angeles | -118.2226256 | 34.0922029 | 50.22 | 88.99 | 85-90% | Yes | 0.046 |
| 6065030501 | 5095 | Riverside | 92507 | Riverside | -117.3545298 | 33.9685095 | 50.18 | 88.98 | 85-90% | Yes | 0.065 |
| 6037218900 | 5464 | Los Angeles | 90018 | Los Angeles | -118.3230172 | 34.0326941 | 50.16 | 88.96 | 85-90% | Yes | 0.046 |
| 6067004802 | 4485 | Sacramento | 95828 | Sacramento | -121.4190446 | 38.4995505 | 50.15 | 88.95 | 85-90% | Yes | 0.048 |
| 6037542800 | 3123 | Los Angeles | 90220 | Compton | -118.2473437 | 33.8995257 | 50.13 | 88.94 | 85-90% | Yes | 0.044 |
| 6077001600 | 2383 | San Joaquin | 95205 | Stockton | -121.2685355 | 37.9651247 | 50.09 | 88.93 | 85-90% | Yes | 0.046 |
| 6037207302 | 3791 | Los Angeles | 90013 | Los Angeles | -118.2477263 | 34.04755 | 50.09 | 88.91 | 85-90% | Yes | 0.046 |

| | | | | | | | | | | | | | | |
|---|---|---|---|---|---|---|---|---|---|---|---|---|---|---|
| 6037237402 | 3526 | Los Angeles | 90047 | Los Angeles | -118.3013342 | 33.9784618 | 50.08 | 88.90 | 85-90% | Yes | 0.046 | 53.02 | 12.05 | 81.66 |
| 6037501400 | 3978 | Los Angeles | 90601 | Whittier | -118.0474017 | 33.9819778 | 50.07 | 88.89 | 85-90% | Yes | 0.046 | 53.02 | 12.05 | 81.66 |
| 6037502601 | 7145 | Los Angeles | 90660 | Pico Rivera | -118.0944003 | 33.9594036 | 50.05 | 88.88 | 85-90% | Yes | 0.046 | 53.02 | 12.05 | 81.66 |
| 6085500100 | 6339 | Santa Clara | 95112 | San Jose | -121.8927423 | 37.358556 | 50.03 | 88.86 | 85-90% | Yes | 0.035 | 16.94 | 10.37 | 52.61 |
| 6071006204 | 4495 | San Bernardino | 92404 | San Bernardino | -117.2535665 | 34.1392095 | 50.03 | 88.85 | 85-90% | Yes | 0.068 | 100.00 | 12.05 | 81.66 |
| 6037432500 | 8210 | Los Angeles | 91732 | El Monte | -118.0058397 | 34.0966686 | 50.03 | 88.84 | 85-90% | Yes | 0.051 | 69.23 | 11.21 | 66.23 |
| 6065042511 | 3308 | Riverside | 92553 | Moreno Valley | -117.2480601 | 33.919149 | 50.03 | 88.83 | 85-90% | Yes | 0.065 | 98.18 | 12.89 | 92.89 |
| 6037573100 | 7165 | Los Angeles | 90806 | Long Beach | -118.197509 | 33.7998434 | 49.99 | 88.81 | 85-90% | Yes | 0.042 | 31.84 | 11.21 | 66.23 |
| 6077005302 | 6507 | San Joaquin | 95376 | Tracy | -121.4207353 | 37.7521308 | 49.99 | 88.80 | 85-90% | Yes | 0.053 | 73.93 | 10.37 | 52.61 |
| 6077003113 | 6256 | San Joaquin | 95207 | Stockton | -121.3238468 | 37.983791 | 49.95 | 88.79 | 85-90% | Yes | 0.046 | 53.02 | 13.44 | 94.00 |
| 6099001604 | 3861 | Stanislaus | 95351 | Modesto | -121.0172914 | 37.6170322 | 49.95 | 88.78 | 85-90% | Yes | 0.053 | 73.93 | 12.89 | 92.89 |
| 6037238320 | 3787 | Los Angeles | 90044 | Los Angeles | -118.2861548 | 33.9621528 | 49.94 | 88.76 | 85-90% | Yes | 0.046 | 53.02 | 12.05 | 81.66 |
| 6071001305 | 5348 | San Bernardino | 91764 | Ontario | -117.62795 | 34.0845072 | 49.94 | 88.75 | 85-90% | Yes | 0.062 | 91.10 | 12.89 | 92.89 |
| 6019005408 | 1276 | Fresno | 93710 | Fresno | -119.7423113 | 36.8188039 | 49.92 | 88.74 | 85-90% | Yes | 0.065 | 98.18 | 15.4 | 97.22 |
| 6037576401 | 4779 | Los Angeles | 90813 | Long Beach | -118.1785058 | 33.778974 | 49.89 | 88.72 | 85-90% | Yes | 0.042 | 31.84 | 11.21 | 66.23 |
| 6037407801 | 5074 | Los Angeles | 91744 | La Puente | -117.9214946 | 34.0302293 | 49.89 | 88.71 | 85-90% | Yes | 0.051 | 69.23 | 11.21 | 66.23 |
| 6037543905 | 4510 | Los Angeles | 90745 | Carson | -118.2550214 | 33.8155623 | 49.87 | 88.70 | 85-90% | Yes | 0.042 | 31.84 | 11.21 | 66.23 |
| 6067004602 | 5067 | Sacramento | 95824 | Sacramento | -121.4600558 | 38.5176604 | 49.86 | 88.69 | 85-90% | Yes | 0.048 | 60.88 | 9.53630303 | 40.92 |
| 6013368002 | 3404 | Contra Costa | 94806 | San Pablo | -122.3520845 | 37.9610592 | 49.85 | 88.67 | 85-90% | Yes | 0.030 | 7.58 | 7.85958451 | 17.81 |
| 6019003702 | 4933 | Fresno | 93705 | Fresno | -119.827823 | 36.7758683 | 49.83 | 88.66 | 85-90% | Yes | 0.062 | 91.10 | 15.4 | 97.22 |
| 6099004000 | 3822 | Stanislaus | 95358 | Modesto | -121.1441905 | 37.6499309 | 49.82 | 88.65 | 85-90% | Yes | 0.053 | 73.93 | 12.89 | 92.89 |
| 6037543501 | 6805 | Los Angeles | 90745 | Carson | -118.2825106 | 33.8387785 | 49.82 | 88.64 | 85-90% | Yes | 0.042 | 31.84 | 11.63 | 69.14 |
| 6065040203 | 3626 | Riverside | 92509 | Riverside | -117.4071313 | 33.9943219 | 49.75 | 88.62 | 85-90% | Yes | 0.065 | 98.18 | 13.31 | 93.64 |
| 6065042512 | 3200 | Riverside | 92553 | Moreno Valley | -117.2567772 | 33.9191537 | 49.74 | 88.61 | 85-90% | Yes | 0.065 | 98.18 | 12.89 | 92.89 |
| 6059086601 | 9584 | Orange | 92801 | Anaheim | -117.933024 | 33.8507453 | 49.72 | 88.60 | 85-90% | Yes | 0.046 | 53.02 | 11.21 | 66.23 |
| 6019007003 | 7750 | Fresno | 93662 | Selma | -119.6260162 | 36.5935943 | 49.72 | 88.59 | 85-90% | Yes | 0.065 | 98.18 | 15.82 | 97.49 |
| 6037238310 | 4821 | Los Angeles | 90044 | Los Angeles | -118.2861074 | 33.9660436 | 49.71 | 88.57 | 85-90% | Yes | 0.046 | 53.02 | 12.05 | 81.66 |
| 6071001002 | 5530 | San Bernardino | 91762 | Ontario | -117.6754429 | 34.0687514 | 49.69 | 88.56 | 85-90% | Yes | 0.062 | 91.10 | 12.89 | 92.89 |
| 6073003502 | 4946 | San Diego | 92113 | San Diego | -117.1134902 | 32.6986004 | 49.67 | 88.55 | 85-90% | Yes | 0.038 | 22.34 | 11.21 | 66.23 |
| 6037534804 | 3878 | Los Angeles | 90255 | Huntington Park | -118.2273157 | 33.9631931 | 49.67 | 88.54 | 85-90% | Yes | 0.044 | 40.49 | 12.05 | 81.66 |
| 6037501803 | 4705 | Los Angeles | 90602 | Whittier | -118.0408524 | 33.9717393 | 49.67 | 88.52 | 85-90% | Yes | 0.046 | 53.02 | 12.05 | 81.66 |
| 6065042506 | 9483 | Riverside | 92553 | Moreno Valley | -117.270282 | 33.9329093 | 49.65 | 88.51 | 85-90% | Yes | 0.065 | 98.18 | 12.89 | 92.89 |
| 6029003112 | 5116 | Kern | 93313 | Bakersfield | -119.0458982 | 35.3174932 | 49.64 | 88.50 | 85-90% | Yes | 0.065 | 98.18 | 18.76 | 99.64 |
| 6071000207 | 4635 | San Bernardino | 91763 | Montclair | -117.7067071 | 34.0703739 | 49.63 | 88.49 | 85-90% | Yes | 0.060 | 85.21 | 12.89 | 92.89 |
| 6037540800 | 5042 | Los Angeles | 90059 | Los Angeles | -118.2557254 | 33.9176122 | 49.61 | 88.47 | 85-90% | Yes | 0.044 | 40.49 | 12.05 | 81.66 |
| 6037570100 | 2837 | Los Angeles | 90805 | Long Beach | -118.1532085 | 33.8644752 | 49.59 | 88.46 | 85-90% | Yes | 0.042 | 31.84 | 11.63 | 69.14 |
| 6077002702 | 4239 | San Joaquin | 95215 | Stockton | -121.2192849 | 37.9618698 | 49.56 | 88.45 | 85-90% | Yes | 0.048 | 60.88 | 13.61 | 94.20 |
| 6107000201 | 9406 | Tulare | 93647 | Orosi | -119.2875202 | 36.5436858 | 49.56 | 88.43 | 85-90% | Yes | 0.065 | 98.18 | 14.15 | 94.96 |
| 6047001003 | 4061 | Merced | 95348 | Merced | -120.4948113 | 37.3196623 | 49.56 | 88.42 | 85-90% | Yes | 0.057 | 82.10 | 12.89 | 92.89 |
| 6037208301 | 2201 | Los Angeles | 90026 | Los Angeles | -118.2658492 | 34.0619781 | 49.55 | 88.41 | 85-90% | Yes | 0.046 | 53.02 | 12.89 | 92.89 |
| 6019004703 | 4218 | Fresno | 93705 | Fresno | -119.8353599 | 36.7901386 | 49.54 | 88.40 | 85-90% | Yes | 0.062 | 91.10 | 15.4 | 97.22 |
| 6037531604 | 3580 | Los Angeles | 90022 | Los Angeles | -118.1623741 | 34.0238371 | 49.53 | 88.38 | 85-90% | Yes | 0.046 | 53.02 | 12.05 | 81.66 |
| 6037191710 | 3231 | Los Angeles | 90038 | Los Angeles | -118.3192272 | 34.0855323 | 49.51 | 88.37 | 85-90% | Yes | 0.048 | 60.88 | 12.89 | 92.89 |
| 6099000909 | 4402 | Stanislaus | 95350 | Modesto | -120.9842758 | 37.673238 | 49.51 | 88.36 | 85-90% | Yes | 0.053 | 73.93 | 12.89 | 92.89 |
| 6037533803 | 6309 | Los Angeles | 90201 | Bell | -118.1839766 | 33.9747696 | 49.48 | 88.35 | 85-90% | Yes | 0.046 | 53.02 | 12.05 | 81.66 |
| 6037576402 | 5181 | Los Angeles | 90813 | Long Beach | -118.1741618 | 33.7789756 | 49.47 | 88.33 | 85-90% | Yes | 0.042 | 31.84 | 11.21 | 66.23 |
| 6001402200 | 2385 | Alameda | 94607 | Oakland | -122.2963076 | 37.8063512 | 49.46 | 88.32 | 85-90% | Yes | 0.030 | 7.58 | 8.69794377 | 30.70 |
| 6073012502 | 4466 | San Diego | 91910 | Chula Vista | -117.1094056 | 32.6421028 | 49.43 | 88.31 | 85-90% | Yes | 0.040 | 25.87 | 11.21 | 66.23 |
| 6037552602 | 4191 | Los Angeles | 90650 | Norwalk | -118.0639397 | 33.8912309 | 49.42 | 88.30 | 85-90% | Yes | 0.046 | 53.02 | 11.63 | 69.14 |
| 6037213310 | 3477 | Los Angeles | 90006 | Los Angeles | -118.2978915 | 34.0508743 | 49.41 | 88.28 | 85-90% | Yes | 0.048 | 60.88 | 12.89 | 92.89 |
| 6065041002 | 3312 | Riverside | 92503 | Riverside | -117.4726482 | 33.9516995 | 49.41 | 88.27 | 85-90% | Yes | 0.062 | 91.10 | 13.31 | 93.64 |
| 6037570304 | 5171 | Los Angeles | 90805 | Long Beach | -118.1926968 | 33.8563177 | 49.41 | 88.26 | 85-90% | Yes | 0.042 | 31.84 | 11.63 | 69.14 |
| 6037551101 | 3926 | Los Angeles | 90242 | Downey | -118.1262274 | 33.9218213 | 49.41 | 88.25 | 85-90% | Yes | 0.044 | 40.49 | 12.05 | 81.66 |
| 6037432202 | 4252 | Los Angeles | 91770 | Rosemead | -118.0708948 | 34.0859512 | 49.40 | 88.23 | 85-90% | Yes | 0.050 | 64.80 | 11.21 | 66.23 |
| 6037236202 | 6192 | Los Angeles | 90008 | Los Angeles | -118.3530792 | 34.0170719 | 49.40 | 88.22 | 85-90% | Yes | 0.046 | 53.02 | 12.05 | 81.66 |
| 6037404901 | 5658 | Los Angeles | 91706 | Baldwin Park | -117.9770768 | 34.0971898 | 49.40 | 88.21 | 85-90% | Yes | 0.051 | 69.23 | 11.21 | 66.23 |
| 6037237500 | 2675 | Los Angeles | 90044 | Los Angeles | -118.2893094 | 33.9783023 | 49.38 | 88.20 | 85-90% | Yes | 0.046 | 53.02 | 12.05 | 81.66 |
| 6065031401 | 6702 | Riverside | 92504 | Riverside | -117.4081832 | 33.9380023 | 49.38 | 88.18 | 85-90% | Yes | 0.065 | 98.18 | 12.05 | 81.66 |
| 6037232600 | 6288 | Los Angeles | 90037 | Los Angeles | -118.2979984 | 33.9920924 | 49.36 | 88.17 | 85-90% | Yes | 0.046 | 53.02 | 12.47 | 83.99 |
| 6071001312 | 4645 | San Bernardino | 91764 | Ontario | -117.6056182 | 34.0740868 | 49.35 | 88.16 | 85-90% | Yes | 0.062 | 91.10 | 12.89 | 92.89 |
| 6037573004 | 5153 | Los Angeles | 90806 | Long Beach | -118.1964734 | 33.7934906 | 49.35 | 88.14 | 85-90% | Yes | 0.042 | 31.84 | 11.21 | 66.23 |
| 6037402600 | 7453 | Los Angeles | 91767 | Pomona | -117.7432184 | 34.0696836 | 49.32 | 88.13 | 85-90% | Yes | 0.057 | 82.10 | 12.89 | 92.89 |
| 6037433307 | 3421 | Los Angeles | 91732 | El Monte | -118.0061894 | 34.0685045 | 49.31 | 88.12 | 85-90% | Yes | 0.050 | 64.80 | 11.21 | 66.23 |
| 6099002602 | 4561 | Stanislaus | 95307 | Ceres | -120.9450461 | 37.5877211 | 49.29 | 88.11 | 85-90% | Yes | 0.055 | 77.87 | 12.89 | 92.89 |
| 6065042515 | 3803 | Riverside | 92553 | Moreno Valley | -117.2406622 | 33.9354567 | 49.27 | 88.09 | 85-90% | Yes | 0.065 | 98.18 | 12.89 | 92.89 |
| 6077001300 | 4903 | San Joaquin | 95204 | Stockton | -121.2928911 | 37.9747159 | 49.26 | 88.08 | 85-90% | Yes | 0.046 | 53.02 | 13.44 | 94.00 |
| 6037104704 | 4219 | Los Angeles | 91331 | Pacoima | -118.4088637 | 34.2625316 | 49.25 | 88.07 | 85-90% | Yes | 0.055 | 77.87 | 11.21 | 66.23 |
| 6019003900 | 5804 | Fresno | 93630 | Kerman | -120.1192112 | 36.7082365 | 49.25 | 88.06 | 85-90% | Yes | 0.060 | 85.21 | 13.73 | 94.67 |
| 6077004404 | 3670 | San Joaquin | 95240 | Lodi | -121.2524178 | 38.1263177 | 49.24 | 88.04 | 85-90% | Yes | 0.048 | 60.88 | 11.33 | 66.27 |
| 6037224410 | 3140 | Los Angeles | 90007 | Los Angeles | -118.2799814 | 34.0351392 | 49.23 | 88.03 | 85-90% | Yes | 0.046 | 53.02 | 12.89 | 92.89 |
| 6001409400 | 4306 | Alameda | 94603 | Oakland | -122.1803623 | 37.744613 | 49.22 | 88.02 | 85-90% | Yes | 0.030 | 7.58 | 8.69794377 | 30.70 |
| 6037128210 | 4822 | Los Angeles | 91401 | Van Nuys | -118.4443453 | 34.1835838 | 49.18 | 88.01 | 85-90% | Yes | 0.055 | 77.87 | 11.21 | 66.23 |
| 6037533203 | 1827 | Los Angeles | 90255 | Huntington Park | -118.2082753 | 33.9742767 | 49.17 | 87.99 | 85-90% | Yes | 0.046 | 53.02 | 12.05 | 81.66 |
| 6037191610 | 4502 | Los Angeles | 90029 | Los Angeles | -118.3059569 | 34.0863828 | 49.13 | 87.98 | 85-90% | Yes | 0.048 | 60.88 | 12.89 | 92.89 |
| 6099003603 | 3952 | Stanislaus | 95380 | Turlock | -120.9439974 | 37.4851794 | 49.13 | 87.97 | 85-90% | Yes | 0.057 | 82.10 | 12.89 | 92.89 |
| 6037405202 | 5227 | Los Angeles | 91706 | Baldwin Park | -117.9632149 | 34.0808733 | 49.11 | 87.96 | 85-90% | Yes | 0.051 | 69.23 | 11.21 | 66.23 |
| 6075017902 | 2880 | San Francisco | 94130 | San Francisco | -122.419701 | 37.8619483 | 49.09 | 87.94 | 85-90% | Yes | 0.030 | 7.58 | 8.69794377 | 30.70 |
| 6047002202 | 9923 | Merced | 93635 | Los Banos | -120.855277 | 37.0847273 | 49.08 | 87.93 | 85-90% | Yes | 0.051 | 69.23 | 12.89 | 92.89 |
| 6025011900 | 10966 | Imperial | 92231 | Calexico | -115.4952025 | 32.6969128 | 49.08 | 87.92 | 85-90% | Yes | 0.053 | 73.93 | 11.63 | 69.14 |
| 6037433402 | 4776 | Los Angeles | 91733 | South El Monte | -118.0346511 | 34.0595281 | 49.07 | 87.91 | 85-90% | Yes | 0.050 | 64.80 | 12.05 | 81.66 |
| 6037234901 | 2999 | Los Angeles | 90043 | Los Angeles | -118.3286609 | 33.9817876 | 49.07 | 87.89 | 85-90% | Yes | 0.046 | 53.02 | 12.05 | 81.66 |
| 6037533503 | 1920 | Los Angeles | 90255 | Huntington Park | -118.1910856 | 33.9845559 | 49.05 | 87.88 | 85-90% | Yes | 0.046 | 53.02 | 12.05 | 81.66 |
| 6037554403 | 5483 | Los Angeles | 90706 | Bellflower | -118.1382198 | 33.8736738 | 49.00 | 87.87 | 85-90% | Yes | 0.044 | 40.49 | 12.05 | 81.66 |
| 6037219700 | 4306 | Los Angeles | 90016 | Los Angeles | -118.3490693 | 34.0277561 | 48.99 | 87.85 | 85-90% | Yes | 0.046 | 53.02 | 12.05 | 81.66 |
| 6037237710 | 3887 | Los Angeles | 90044 | Los Angeles | -118.2861364 | 33.9726959 | 48.98 | 87.84 | 85-90% | Yes | 0.046 | 53.02 | 12.05 | 81.66 |
| 6037209300 | 5021 | Los Angeles | 90017 | Los Angeles | -118.2683015 | 34.05073 | 48.97 | 87.83 | 85-90% | Yes | 0.046 | 53.02 | 12.89 | 92.89 |
| 6071003609 | 4871 | San Bernardino | 92316 | Bloomington | -117.3768768 | 34.0768408 | 48.94 | 87.82 | 85-90% | Yes | 0.065 | 98.18 | 12.89 | 92.89 |
| 6067004701 | 3303 | Sacramento | 95823 | Sacramento | -121.4394836 | 38.5002139 | 48.89 | 87.80 | 85-90% | Yes | 0.048 | 60.88 | 9.53630303 | 40.92 |
| 6065030101 | 1226 | Riverside | 92507 | Riverside | -117.3520326 | 33.9971131 | 48.89 | 87.79 | 85-90% | Yes | 0.065 | 98.18 | 12.89 | 92.89 |
| 6037572600 | 5370 | Los Angeles | 90810 | Long Beach | -118.2140846 | 33.8071157 | 48.88 | 87.78 | 85-90% | Yes | 0.042 | 31.84 | 11.21 | 66.23 |
| 6037127803 | 4037 | Los Angeles | 91405 | Van Nuys | -118.4530799 | 34.1975155 | 48.88 | 87.77 | 85-90% | Yes | 0.055 | 77.87 | 11.21 | 66.23 |
| 6037603702 | 5087 | Los Angeles | 90506 | Torrance | -118.3393815 | 33.8829956 | 48.86 | 87.75 | 85-90% | Yes | 0.044 | 40.49 | 12.05 | 81.66 |
| 6013376000 | 5962 | Contra Costa | 94801 | Richmond | -122.3624287 | 37.9410164 | 48.86 | 87.74 | 85-90% | Yes | 0.030 | 7.58 | 8.27876414 | 20.16 |
| 6037530301 | 2168 | Los Angeles | 90022 | Los Angeles | -118.155189 | 34.0294615 | 48.85 | 87.73 | 85-90% | Yes | 0.046 | 53.02 | 12.05 | 81.66 |
| 6037552301 | 4900 | Los Angeles | 90650 | Norwalk | -118.0648469 | 33.9126443 | 48.84 | 87.72 | 85-90% | Yes | 0.046 | 53.02 | 12.05 | 81.66 |
| 6037109500 | 4303 | Los Angeles | 91340 | San Fernando | -118.4389293 | 34.2703268 | 48.84 | 87.70 | 85-90% | Yes | 0.057 | 82.10 | 11.21 | 66.23 |
| 6037603200 | 2777 | Los Angeles | 90248 | Gardena | -118.3022069 | 33.8701634 | 48.83 | 87.69 | 85-90% | Yes | 0.042 | 31.84 | 12.05 | 81.66 |
| 6037104701 | 4208 | Los Angeles | 91331 | Pacoima | -118.415214 | 34.2684745 | 48.83 | 87.68 | 85-90% | Yes | 0.057 | 82.10 | 11.21 | 66.23 |
| 6037232300 | 3926 | Los Angeles | 90037 | Los Angeles | -118.2981841 | 33.9974228 | 48.81 | 87.67 | 85-90% | Yes | 0.046 | 53.02 | 12.89 | 92.89 |
| 6065042800 | 9260 | Riverside | 92570 | Perris | -117.2305725 | 33.7831506 | 48.80 | 87.65 | 85-90% | Yes | 0.065 | 98.18 | 12.47 | 83.99 |
| 6037500403 | 4023 | Los Angeles | 90660 | Pico Rivera | -118.0662039 | 34.0117536 | 48.80 | 87.64 | 85-90% | Yes | 0.046 | 53.02 | 12.05 | 81.66 |
| 6071003505 | 5969 | San Bernardino | 92376 | Rialto | -117.375879 | 34.1195504 | 48.78 | 87.63 | 85-90% | Yes | 0.065 | 98.18 | 12.89 | 92.89 |
| 6059087803 | 5658 | Orange | 90680 | Stanton | -117.9888565 | 33.8102448 | 48.78 | 87.62 | 85-90% | Yes | 0.046 | 53.02 | 11.21 | 66.23 |
| 6065041703 | 5695 | Riverside | 92882 | Corona | -117.5888049 | 33.8785015 | 48.73 | 87.60 | 85-90% | Yes | 0.060 | 85.21 | 12.89 | 92.89 |
| 6031001300 | 3761 | Kings | 93212 | Corcoran | -119.5542173 | 36.119739 | 48.73 | 87.59 | 85-90% | Yes | 0.062 | 91.10 | 17.08 | 98.60 |
| 6071009300 | 1257 | San Bernardino | 92311 | Barstow | -117.0327115 | 34.9077413 | 48.72 | 87.58 | 85-90% | Yes | 0.060 | 85.21 | 7.00068171 | 8.99 |
| 6073016202 | 3337 | San Diego | 92020 | El Cajon | -116.9711319 | 32.8149714 | 48.71 | 87.56 | 85-90% | Yes | 0.044 | 40.49 | 11.21 | 66.23 |
| 6037224700 | 4856 | Los Angeles | 90007 | Los Angeles | -118.280016 | 34.0262403 | 48.70 | 87.55 | 85-90% | Yes | 0.046 | 53.02 | 12.89 | 92.89 |
| 6073021900 | 6816 | San Diego | 91950 | National City | -117.1150589 | 32.6564826 | 48.70 | 87.54 | 85-90% | Yes | 0.040 | 25.87 | 11.63 | 69.14 |
| 6037208801 | 2995 | Los Angeles | 90057 | Los Angeles | -118.2770843 | 34.059675 | 48.69 | 87.53 | 85-90% | Yes | 0.046 | 53.02 | 12.89 | 92.89 |
| 6037208502 | 3571 | Los Angeles | 90057 | Los Angeles | -118.2741645 | 34.066049 | 48.68 | 87.51 | 85-90% | Yes | 0.046 | 53.02 | 12.89 | 92.89 |
| 6037433802 | 2780 | Los Angeles | 91733 | South El Monte | -118.060117 | 34.0344665 | 48.67 | 87.50 | 85-90% | Yes | 0.046 | 53.02 | 12.05 | 81.66 |
| 6037433602 | 2803 | Los Angeles | 91770 | Rosemead | -118.0747627 | 34.0592472 | 48.66 | 87.49 | 85-90% | Yes | 0.048 | 60.88 | 12.05 | 81.66 |
| 6037552100 | 5891 | Los Angeles | 90650 | Norwalk | -118.0880792 | 33.9054717 | 48.66 | 87.48 | 85-90% | Yes | 0.046 | 53.02 | 12.05 | 81.66 |
| 6019002200 | 3594 | Fresno | 93728 | Fresno | -119.8037024 | 36.7585393 | 48.64 | 87.46 | 85-90% | Yes | 0.062 | 91.10 | 15.4 | 97.22 |
| 6067000500 | 3159 | Sacramento | 95814 | Sacramento | -121.4823108 | 38.5834331 | 48.64 | 87.45 | 85-90% | Yes | 0.046 | 53.02 | 9.53630303 | 40.92 |
| 6067009201 | 2293 | Sacramento | 95829 | Sacramento | -121.3406904 | 38.5003097 | 48.64 | 87.44 | 85-90% | Yes | 0.050 | 64.80 | 9.53630303 | 40.92 |
| 6037104821 | 3514 | Los Angeles | 91331 | Pacoima | -118.4162955 | 34.2465705 | 48.63 | 87.43 | 85-90% | Yes | 0.055 | 77.87 | 11.21 | 66.23 |
| 6029004500 | 3937 | Kern | 93249 | Lost Hills | -119.7746623 | 35.6497752 | 48.63 | 87.41 | 85-90% | Yes | 0.057 | 82.10 | 12.68 | 84.06 |
| 6037405002 | 3197 | Los Angeles | 91706 | Baldwin Park | -117.9489743 | 34.1033004 | 48.61 | 87.40 | 85-90% | Yes | 0.053 | 73.93 | 11.21 | 66.23 |
| 6029003202 | 15579 | Kern | 93307 | Bakersfield | -119.0038623 | 35.271205 | 48.59 | 87.39 | 85-90% | Yes | 0.065 | 98.18 | 19.18 | 99.86 |
| 6037213202 | 3873 | Los Angeles | 90006 | Los Angeles | -118.3045035 | 34.0490294 | 48.58 | 87.38 | 85-90% | Yes | 0.048 | 60.88 | 12.89 | 92.89 |
| 6037576200 | 6158 | Los Angeles | 90802 | Long Beach | -118.1867636 | 33.7723836 | 48.56 | 87.36 | 85-90% | Yes | 0.042 | 31.84 | 11.21 | 66.23 |
| 6037221500 | 3507 | Los Angeles | 90018 | Los Angeles | -118.3046372 | 34.0348455 | 48.53 | 87.35 | 85-90% | Yes | 0.046 | 53.02 | 12.89 | 92.89 |
| 6037402502 | 7225 | Los Angeles | 91766 | Pomona | -117.7604508 | 34.0477052 | 48.52 | 87.34 | 85-90% | Yes | 0.057 | 82.10 | 12.89 | 92.89 |
| 6085504318 | 5265 | Santa Clara | 95131 | San Jose | -121.8957703 | 37.376939 | 48.52 | 87.33 | 85-90% | Yes | 0.035 | 16.94 | 10.37 | 52.61 |
| 6037534404 | 3647 | Los Angeles | 90201 | Bell | -118.1906245 | 33.9662404 | 48.52 | 87.31 | 85-90% | Yes | 0.046 | 53.02 | 12.05 | 81.66 |
| 6013310000 | 5641 | Contra Costa | 94565 | Pittsburg | -121.8917858 | 38.0264843 | 48.52 | 87.30 | 85-90% | Yes | 0.038 | 22.34 | 7.85958451 | 17.81 |
| 6037236203 | 3417 | Los Angeles | 90016 | Los Angeles | -118.3467706 | 34.0184552 | 48.48 | 87.29 | 85-90% | Yes | 0.046 | 53.02 | 12.05 | 81.66 |
| 6067005502 | 5477 | Sacramento | 95815 | Sacramento | -121.4270027 | 38.6046274 | 48.48 | 87.27 | 85-90% | Yes | 0.050 | 64.80 | 9.53630303 | 40.92 |
| 6037191820 | 2647 | Los Angeles | 90038 | Los Angeles | -118.3277048 | 34.0852963 | 48.47 | 87.26 | 85-90% | Yes | 0.048 | 60.88 | 12.47 | 83.99 |
| 6037408140 | 3835 | Los Angeles | 91744 | La Puente | -117.9032402 | 34.0095219 | 48.47 | 87.25 | 85-90% | Yes | 0.051 | 69.23 | 11.21 | 66.23 |
| 6019004802 | 4599 | Fresno | 93705 | Fresno | -119.8222476 | 36.78763 | 48.47 | 87.24 | 85-90% | Yes | 0.062 | 91.10 | 15.4 | 97.22 |
| 6037553901 | 6896 | Los Angeles | 90723 | Paramount | -118.1514235 | 33.8928037 | 48.47 | 87.22 | 85-90% | Yes | 0.044 | 40.49 | 12.05 | 81.66 |
| 6067002100 | 2377 | Sacramento | 95818 | Sacramento | -121.5063658 | 38.5693327 | 48.47 | 87.21 | 85-90% | Yes | 0.046 | 53.02 | 9.53630303 | 40.92 |
| 6037552200 | 6835 | Los Angeles | 90650 | Norwalk | -118.07318 | 33.9087246 | 48.46 | 87.20 | 85-90% | Yes | 0.046 | 53.02 | 12.05 | 81.66 |
| 6025010400 | 7162 | Imperial | 92227 | Brawley | -115.5223739 | 32.9902904 | 48.43 | 87.19 | 85-90% | Yes | 0.051 | 69.23 | 7.85958451 | 17.81 |
| 6019003500 | 5674 | Fresno | 93704 | Fresno | -119.7950446 | 36.7722645 | 48.41 | 87.17 | 85-90% | Yes | 0.062 | 91.10 | 15.4 | 97.22 |
| 6037535501 | 3866 | Los Angeles | 90280 | South Gate | -118.2221109 | 33.961166 | 48.41 | 87.16 | 85-90% | Yes | 0.044 | 40.49 | 12.05 | 81.66 |
| 6037231220 | 3824 | Los Angeles | 90037 | Los Angeles | -118.2893753 | 34.0145635 | 48.41 | 87.15 | 85-90% | Yes | 0.046 | 53.02 | 12.89 | 92.89 |
| 6037543802 | 7126 | Los Angeles | 90745 | Carson | -118.2697206 | 33.8293509 | 48.39 | 87.14 | 85-90% | Yes | 0.042 | 31.84 | 11.63 | 69.14 |
| 6037237401 | 3616 | Los Angeles | 90044 | Los Angeles | -118.2948084 | 33.9784675 | 48.37 | 87.12 | 85-90% | Yes | 0.046 | 53.02 | 12.05 | 81.66 |
| 6071001702 | 4827 | San Bernardino | 91762 | Ontario | -117.6753207 | 34.0448163 | 48.35 | 87.11 | 85-90% | Yes | 0.060 | 85.21 | 12.89 | 92.89 |
| 6037572700 | 5499 | Los Angeles | 90810 | Long Beach | -118.212716 | 33.801549 | 48.35 | 87.10 | 85-90% | Yes | 0.042 | 31.84 | 11.21 | 66.23 |
| 6037407302 | 3501 | Los Angeles | 91744 | La Puente | -117.9608384 | 34.0395089 | 48.34 | 87.09 | 85-90% | Yes | 0.051 | 69.23 | 11.63 | 69.14 |
| 6037121221 | 2365 | Los Angeles | 91352 | Sun Valley | -118.3955564 | 34.2276073 | 48.34 | 87.07 | 85-90% | Yes | 0.055 | 77.87 | 12.05 | 81.66 |
| 6107000502 | 3405 | Tulare | 93618 | Dinuba | -119.3924612 | 36.5293483 | 48.32 | 87.06 | 85-90% | Yes | 0.065 | 98.18 | 15.82 | 97.49 |
| 6071001706 | 6231 | San Bernardino | 91762 | Ontario | -117.6611549 | 34.0526197 | 48.32 | 87.05 | 85-90% | Yes | 0.062 | 91.10 | 12.89 | 92.89 |
| 6107000401 | 5193 | Tulare | 93618 | Dinuba | -119.3857111 | 36.5617547 | 48.30 | 87.03 | 85-90% | Yes | 0.065 | 98.18 | 15.82 | 97.49 |
| 6065040503 | 3876 | Riverside | 91752 | Mira Loma | -117.5161423 | 34.0222888 | 48.29 | 87.02 | 85-90% | Yes | 0.062 | 91.10 | 14.15 | 94.96 |
| 6071003102 | 5466 | San Bernardino | 92335 | Fontana | -117.4400681 | 34.0848456 | 48.29 | 87.01 | 85-90% | Yes | 0.065 | 98.18 | 12.89 | 92.89 |
| 6013311000 | 5001 | Contra Costa | 94565 | Pittsburg | -121.8936219 | 38.0214503 | 48.28 | 87.00 | 85-90% | Yes | 0.038 | 22.34 | 7.85958451 | 17.81 |
| 6047001901 | 5739 | Merced | 95340 | Merced | -120.3392864 | 37.355853 | 48.26 | 86.98 | 85-90% | Yes | 0.057 | 82.10 | 12.89 | 92.89 |
| 6047001700 | 6335 | Merced | 95341 | Merced | -120.4449003 | 37.2869017 | 48.25 | 86.97 | 85-90% | Yes | 0.057 | 82.10 | 12.89 | 92.89 |
| 6075023400 | 3660 | San Francisco | 94124 | San Francisco | -122.3900882 | 37.7215929 | 48.25 | 86.96 | 85-90% | Yes | 0.030 | 7.58 | 8.69794377 | 30.70 |
| 6065041408 | 4017 | Riverside | 92505 | Riverside | -117.4691482 | 33.9042171 | 48.21 | 86.95 | 85-90% | Yes | 0.062 | 91.10 | 12.89 | 92.89 |
| 6059011602 | 5237 | Orange | 92831 | Fullerton | -117.9022903 | 33.8615748 | 48.19 | 86.93 | 85-90% | Yes | 0.046 | 53.02 | 11.21 | 66.23 |
| 6019008200 | 6978 | Fresno | 93608 | Cantua Creek | -120.2392392 | 36.5557643 | 48.18 | 86.92 | 85-90% | Yes | 0.057 | 82.10 | 13.75 | 94.69 |
| 6071004301 | 4677 | San Bernardino | 92410 | San Bernardino | -117.3460354 | 34.111535 | 48.17 | 86.91 | 85-90% | Yes | 0.065 | 98.18 | 12.89 | 92.89 |
| 6037221302 | 4403 | Los Angeles | 90019 | Los Angeles | -118.3114921 | 34.0417457 | 48.15 | 86.90 | 85-90% | Yes | 0.046 | 53.02 | 12.89 | 92.89 |
| 6095250701 | 2962 | Solano | 94590 | Vallejo | -122.2449025 | 38.0900421 | 48.15 | 86.88 | 85-90% | Yes | 0.035 | 16.94 | 7.85958451 | 17.81 |
| 6037120400 | 6272 | Los Angeles | 91402 | Panorama City | -118.4323396 | 34.2188821 | 48.14 | 86.87 | 85-90% | Yes | 0.055 | 77.87 | 11.21 | 66.23 |
| 6067002000 | 2376 | Sacramento | 95818 | Sacramento | -121.4903061 | 38.5652846 | 48.12 | 86.86 | 85-90% | Yes | 0.046 | 53.02 | 9.53630303 | 40.92 |
| 6029004301 | 7416 | Kern | 93280 | Wasco | -119.3509151 | 35.5738555 | 48.12 | 86.85 | 85-90% | Yes | 0.062 | 91.10 | 18.76 | 99.64 |
| 6081611900 | 10325 | San Mateo | 94303 | Palo Alto | -122.1238259 | 37.4667198 | 48.11 | 86.83 | 85-90% | Yes | 0.033 | 11.08 | 9.53630303 | 40.92 |
| 6037302201 | 3856 | Los Angeles | 91205 | Glendale | -118.2484454 | 34.1444791 | 48.11 | 86.82 | 85-90% | Yes | 0.051 | 69.23 | 12.05 | 81.66 |
| 6037408202 | 2037 | Los Angeles | 91745 | Hacienda Heights | -117.9657288 | 34.0213468 | 48.10 | 86.81 | 85-90% | Yes | 0.050 | 64.80 | 11.63 | 69.14 |
| 6037234700 | 3888 | Los Angeles | 90043 | Los Angeles | -118.3276852 | 33.9872213 | 48.10 | 86.80 | 85-90% | Yes | 0.046 | 53.02 | 12.05 | 81.66 |
| 6037533502 | 2143 | Los Angeles | 90255 | Huntington Park | -118.1948545 | 33.9850347 | 48.10 | 86.78 | 85-90% | Yes | 0.046 | 53.02 | 12.05 | 81.66 |
| 6025011100 | 3685 | Imperial | 92243 | El Centro | -115.6765631 | 32.785558 | 48.09 | 86.77 | 85-90% | Yes | 0.053 | 73.93 | 8.69794377 | 30.70 |
| 6037530302 | 6556 | Los Angeles | 90022 | Los Angeles | -118.1479458 | 34.0278115 | 48.05 | 86.76 | 85-90% | Yes | 0.046 | 53.02 | 12.05 | 81.66 |
| 6037191410 | 5092 | Los Angeles | 90029 | Los Angeles | -118.2881169 | 34.0887621 | 48.04 | 86.74 | 85-90% | Yes | 0.048 | 60.88 | 12.89 | 92.89 |
| 6037121600 | 3005 | Los Angeles | 91605 | North Hollywood | -118.4105915 | 34.211069 | 48.03 | 86.73 | 85-90% | Yes | 0.055 | 77.87 | 11.63 | 69.14 |
| 6071006302 | 8815 | San Bernardino | 92404 | San Bernardino | -117.2541147 | 34.1268693 | 48.01 | 86.72 | 85-90% | Yes | 0.065 | 98.18 | 12.05 | 81.66 |
| 6073004700 | 1858 | San Diego | 92102 | San Diego | -117.1450748 | 32.7083889 | 47.99 | 86.71 | 85-90% | Yes | 0.038 | 22.34 | 11.21 | 66.23 |
| 6037603400 | 4367 | Los Angeles | 90249 | Gardena | -118.3134339 | 33.8934711 | 47.98 | 86.69 | 85-90% | Yes | 0.044 | 40.49 | 12.05 | 81.66 |
| 6001408900 | 3414 | Alameda | 94621 | Oakland | -122.1887803 | 37.7541816 | 47.97 | 86.68 | 85-90% | Yes | 0.030 | 7.58 | 8.69794377 | 30.70 |
| 6037504101 | 5126 | Los Angeles | 90638 | La Mirada | -118.033316 | 33.9099095 | 47.96 | 86.67 | 85-90% | Yes | 0.046 | 53.02 | 11.63 | 69.14 |
| 6025012100 | 6937 | Imperial | 92231 | Calexico | -115.4976096 | 32.6767102 | 47.95 | 86.66 | 85-90% | Yes | 0.053 | 73.93 | 13.73 | 94.67 |
| 6037551900 | 5344 | Los Angeles | 90650 | Norwalk | -118.1046032 | 33.9105501 | 47.95 | 86.64 | 85-90% | Yes | 0.044 | 40.49 | 12.05 | 81.66 |
| 6059110606 | 4590 | Orange | 90621 | Buena Park | -118.0045274 | 33.8774063 | 47.90 | 86.63 | 85-90% | Yes | 0.046 | 53.02 | 11.21 | 66.23 |
| 6019007500 | 5287 | Fresno | 93609 | Caruthers | -119.8284031 | 36.5336682 | 47.90 | 86.62 | 85-90% | Yes | 0.062 | 91.10 | 15.82 | 97.49 |
| 6037213401 | 4951 | Los Angeles | 90006 | Los Angeles | -118.2879026 | 34.0537069 | 47.87 | 86.61 | 85-90% | Yes | 0.046 | 53.02 | 12.89 | 92.89 |
| 6037603900 | 7527 | Los Angeles | 90260 | Lawndale | -118.35763 | 33.894766 | 47.83 | 86.59 | 85-90% | Yes | 0.044 | 40.49 | 12.05 | 81.66 |
| 6037238000 | 5864 | Los Angeles | 90047 | Los Angeles | -118.3097251 | 33.9472944 | 47.82 | 86.58 | 85-90% | Yes | 0.046 | 53.02 | 12.05 | 81.66 |
| 6037532200 | 6836 | Los Angeles | 90640 | Montebello | -118.1226036 | 33.9867681 | 47.82 | 86.57 | 85-90% | Yes | 0.046 | 53.02 | 12.05 | 81.66 |
| 6115040400 | 5538 | Yuba | 95961 | Olivehurst | -121.5826165 | 39.0999148 | 47.81 | 86.56 | 85-90% | Yes | 0.048 | 60.88 | 8.69794377 | 30.70 |
| 6019006604 | 7959 | Fresno | 93654 | Reedley | -119.4393739 | 36.6045254 | 47.79 | 86.54 | 85-90% | Yes | 0.065 | 98.18 | 16.24 | 97.73 |
| 6037241110 | 3074 | Los Angeles | 90061 | Los Angeles | -118.2716976 | 33.936494 | 47.77 | 86.53 | 85-90% | Yes | 0.044 | 40.49 | 12.05 | 81.66 |
| 6037195804 | 2643 | Los Angeles | 90026 | Los Angeles | -118.2728192 | 34.0787744 | 47.77 | 86.52 | 85-90% | Yes | 0.046 | 53.02 | 12.89 | 92.89 |
| 6077003313 | 2926 | San Joaquin | 95207 | Stockton | -121.2955499 | 37.9973494 | 47.76 | 86.51 | 85-90% | Yes | 0.048 | 60.88 | 13.44 | 94.00 |
| 6029000101 | 12240 | Kern | 93308 | Bakersfield | -119.0511858 | 35.4411814 | 47.74 | 86.49 | 85-90% | Yes | 0.062 | 91.10 | 18.76 | 99.64 |
| 6059074300 | 4392 | Orange | 92707 | Santa Ana | -117.8602323 | 33.7196057 | 47.71 | 86.48 | 85-90% | Yes | 0.046 | 53.02 | 10.37 | 52.61 |
| 6037221304 | 3319 | Los Angeles | 90019 | Los Angeles | -118.3146461 | 34.045362 | 47.69 | 86.47 | 85-90% | Yes | 0.048 | 60.88 | 12.89 | 92.89 |
| 6037532101 | 6663 | Los Angeles | 90640 | Montebello | -118.1062505 | 34.0048535 | 47.66 | 86.45 | 85-90% | Yes | 0.046 | 53.02 | 12.05 | 81.66 |
| 6037237600 | 4259 | Los Angeles | 90044 | Los Angeles | -118.283872 | 33.9785135 | 47.66 | 86.44 | 85-90% | Yes | 0.046 | 53.02 | 12.05 | 81.66 |
| 6039000800 | 7027 | Madera | 93637 | Madera | -120.0616242 | 36.9597277 | 47.65 | 86.43 | 85-90% | Yes | 0.062 | 91.10 | 12.05 | 81.66 |
| 6059089004 | 7011 | Orange | 92703 | Santa Ana | -117.9245717 | 33.7524445 | 47.63 | 86.42 | 85-90% | Yes | 0.046 | 53.02 | 11.21 | 66.23 |
| 6073011602 | 3228 | San Diego | 91950 | National City | -117.0941732 | 32.6599903 | 47.62 | 86.40 | 85-90% | Yes | 0.040 | 25.87 | 11.21 | 66.23 |
| 6065042513 | 3379 | Riverside | 92553 | Moreno Valley | -117.2569855 | 33.9345424 | 47.62 | 86.39 | 85-90% | Yes | 0.065 | 98.18 | 12.89 | 92.89 |
| 6037601302 | 6856 | Los Angeles | 90302 | Inglewood | -118.3644426 | 33.9692979 | 47.60 | 86.38 | 85-90% | Yes | 0.046 | 53.02 | 12.05 | 81.66 |
| 6071006700 | 4486 | San Bernardino | 92324 | Colton | -117.3219438 | 34.083291 | 47.60 | 86.37 | 85-90% | Yes | 0.065 | 98.18 | 12.47 | 83.99 |
| 6037294421 | 2950 | Los Angeles | 90710 | Harbor City | -118.2975664 | 33.790373 | 47.60 | 86.35 | 85-90% | Yes | 0.042 | 31.84 | 11.21 | 66.23 |
| 6077002504 | 3982 | San Joaquin | 95206 | Stockton | -121.3103842 | 37.9244359 | 47.59 | 86.34 | 85-90% | Yes | 0.048 | 60.88 | 11.63 | 69.14 |
| 6037104610 | 3672 | Los Angeles | 91331 | Pacoima | -118.4189927 | 34.2604355 | 47.59 | 86.33 | 85-90% | Yes | 0.055 | 77.87 | 11.21 | 66.23 |
| 6037481500 | 4361 | Los Angeles | 91801 | Alhambra | -118.1127509 | 34.0822256 | 47.58 | 86.32 | 85-90% | Yes | 0.050 | 64.80 | 11.63 | 69.14 |
| 6037190401 | 3135 | Los Angeles | 90027 | Los Angeles | -118.3027866 | 34.1035718 | 47.57 | 86.30 | 85-90% | Yes | 0.050 | 64.80 | 12.89 | 92.89 |
| 6037218702 | 2176 | Los Angeles | 90018 | Los Angeles | -118.3337765 | 34.0334074 | 47.57 | 86.29 | 85-90% | Yes | 0.046 | 53.02 | 12.47 | 83.99 |
| 6037406702 | 5823 | Los Angeles | 91790 | West Covina | -117.9382452 | 34.0659535 | 47.56 | 86.28 | 85-90% | Yes | 0.053 | 73.93 | 11.21 | 66.23 |
| 6019007300 | 4869 | Fresno | 93662 | Selma | -119.6917634 | 36.5344594 | 47.54 | 86.27 | 85-90% | Yes | 0.065 | 98.18 | 15.82 | 97.49 |
| 6001401800 | 1703 | Alameda | 94607 | Oakland | -122.298236 | 37.809532 | 47.54 | 86.25 | 85-90% | Yes | 0.030 | 7.58 | 8.69794377 | 30.70 |
| 6037208903 | 4019 | Los Angeles | 90057 | Los Angeles | -118.2733596 | 34.0597996 | 47.53 | 86.24 | 85-90% | Yes | 0.046 | 53.02 | 12.89 | 92.89 |
| 6029003121 | 8264 | Kern | 93307 | Bakersfield | -119.0121274 | 35.3176683 | 47.52 | 86.23 | 85-90% | Yes | 0.065 | 98.18 | 19.18 | 99.86 |
| 6019007002 | 4514 | Fresno | 93662 | Selma | -119.6086518 | 36.5699543 | 47.50 | 86.22 | 85-90% | Yes | 0.065 | 98.18 | 16.24 | 97.73 |
| 6037294510 | 4214 | Los Angeles | 90744 | Wilmington | -118.271694 | 33.7865877 | 47.49 | 86.20 | 85-90% | Yes | 0.042 | 31.84 | 11.21 | 66.23 |
| 6037222600 | 5631 | Los Angeles | 90007 | Los Angeles | -118.295871 | 34.0218424 | 47.48 | 86.19 | 85-90% | Yes | 0.046 | 53.02 | 12.89 | 92.89 |
| 6037127804 | 3933 | Los Angeles | 91405 | Van Nuys | -118.4618228 | 34.1974926 | 47.48 | 86.18 | 85-90% | Yes | 0.055 | 77.87 | 11.21 | 66.23 |
| 6037270300 | 2364 | Los Angeles | 90034 | Los Angeles | -118.3718243 | 34.0405392 | 47.47 | 86.16 | 85-90% | Yes | 0.046 | 53.02 | 12.05 | 81.66 |
| 6031000800 | 4858 | Kings | 93230 | Hanford | -119.6189777 | 36.3279951 | 47.47 | 86.15 | 85-90% | Yes | 0.062 | 91.10 | 17.08 | 98.60 |
| 6037128601 | 4288 | Los Angeles | 91401 | Van Nuys | -118.4410821 | 34.1784585 | 47.46 | 86.14 | 85-90% | Yes | 0.055 | 77.87 | 11.21 | 66.23 |
| 6073003602 | 3079 | San Diego | 92113 | San Diego | -117.1074107 | 32.6929366 | 47.45 | 86.13 | 85-90% | Yes | 0.038 | 22.34 | 11.21 | 66.23 |

| | | | | | | | | | |
|---|---|---|---|---|---|---|---|---|---|
| 6065040402 | 4224 | Riverside | 92509 | Riverside | -117.4868554 | 33.9745825 | 47.45 | 86.11 | 85-90% |
| 6071003200 | 8005 | San Bernardino | 92335 | Fontana | -117.4269916 | 34.084891 | 47.45 | 86.10 | 85-90% |
| 6071002502 | 8051 | San Bernardino | 92335 | Fontana | -117.462458 | 34.077528 | 47.44 | 86.09 | 85-90% |
| 6077003405 | 4214 | San Joaquin | 95210 | Stockton | -121.2861975 | 38.0255205 | 47.44 | 86.08 | 85-90% |
| 6037500402 | 4910 | Los Angeles | 90660 | Pico Rivera | -118.0763967 | 34.0036044 | 47.44 | 86.06 | 85-90% |
| 6029005003 | 3543 | Kern | 93215 | Delano | -119.2324678 | 35.7436341 | 47.43 | 86.05 | 85-90% |
| 6037542700 | 5720 | Los Angeles | 90220 | Compton | -118.2360631 | 33.9013299 | 47.43 | 86.04 | 85-90% |
| 6037127910 | 4769 | Los Angeles | 91405 | Van Nuys | -118.4443624 | 34.1975649 | 47.43 | 86.03 | 85-90% |
| 6077004502 | 4450 | San Joaquin | 95240 | Lodi | -121.2596577 | 38.1342162 | 47.42 | 86.01 | 85-90% |
| 6037203720 | 4001 | Los Angeles | 90033 | Los Angeles | -118.2031501 | 34.0468935 | 47.40 | 86.00 | 85-90% |
| 6107003300 | 7837 | Tulare | 93267 | Strathmore | -119.1119527 | 36.1328505 | 47.40 | 85.99 | 85-90% |
| 6031001003 | 5699 | Kings | 93230 | Hanford | -119.6730488 | 36.3058649 | 47.40 | 85.98 | 85-90% |
| 6037221601 | 3403 | Los Angeles | 90007 | Los Angeles | -118.2959265 | 34.0348166 | 47.38 | 85.96 | 85-90% |
| 6085512603 | 3954 | Santa Clara | 95020 | Gilroy | -121.5626698 | 37.001726 | 47.37 | 85.95 | 85-90% |
| 6019002904 | 2897 | Fresno | 93727 | Fresno | -119.7272843 | 36.7468038 | 47.37 | 85.94 | 85-90% |
| 6037221820 | 3095 | Los Angeles | 90007 | Los Angeles | -118.2864985 | 34.0304526 | 47.37 | 85.93 | 85-90% |
| 6037530400 | 3683 | Los Angeles | 91754 | Monterey Park | -118.1545859 | 34.0382967 | 47.36 | 85.91 | 85-90% |
| 6037602403 | 5230 | Los Angeles | 90250 | Hawthorne | -118.3481183 | 33.9130743 | 47.36 | 85.90 | 85-90% |
| 6099003300 | 5077 | Stanislaus | 95363 | Patterson | -121.298493 | 37.4986999 | 47.34 | 85.89 | 85-90% |
| 6037119001 | 4038 | Los Angeles | 91331 | Pacoima | -118.4203143 | 34.2351095 | 47.33 | 85.87 | 85-90% |
| 6037213320 | 2481 | Los Angeles | 90006 | Los Angeles | -118.2937 | 34.050883 | 47.33 | 85.86 | 85-90% |
| 6071007109 | 6064 | San Bernardino | 92313 | Grand Terrace | -117.3072899 | 34.042144 | 47.32 | 85.85 | 85-90% |
| 6037297120 | 3315 | Los Angeles | 90731 | San Pedro | -118.2850961 | 33.7280812 | 47.32 | 85.84 | 85-90% |
| 6107003100 | 3591 | Tulare | 93274 | Tulare | -119.4402943 | 36.1358963 | 47.32 | 85.82 | 85-90% |
| 6001406100 | 4381 | Alameda | 94601 | Oakland | -122.2275943 | 37.7741552 | 47.31 | 85.81 | 85-90% |
| 6037231300 | 5348 | Los Angeles | 90062 | Los Angeles | -118.304538 | 34.0145164 | 47.29 | 85.80 | 85-90% |
| 6071004001 | 4763 | San Bernardino | 92316 | Bloomington | -117.4033115 | 34.0557926 | 47.26 | 85.79 | 85-90% |
| 6099000302 | 2641 | Stanislaus | 95367 | Riverbank | -120.9473005 | 37.7365049 | 47.26 | 85.77 | 85-90% |
| 6037190700 | 3379 | Los Angeles | 90028 | Los Angeles | -118.3336722 | 34.0986626 | 47.23 | 85.76 | 85-90% |
| 6037576901 | 6092 | Los Angeles | 90804 | Long Beach | -118.164632 | 33.7791377 | 47.22 | 85.75 | 85-90% |
| 6037123901 | 4500 | Los Angeles | 91606 | North Hollywood | -118.3938003 | 34.1854544 | 47.20 | 85.74 | 85-90% |
| 6037241201 | 2898 | Los Angeles | 90044 | Los Angeles | -118.2858348 | 33.9402403 | 47.18 | 85.72 | 85-90% |
| 6075023102 | 3478 | San Francisco | 94124 | San Francisco | -122.3844982 | 37.734492 | 47.15 | 85.71 | 85-90% |
| 6071002301 | 9721 | San Bernardino | 92336 | Fontana | -117.4426859 | 34.1251086 | 47.14 | 85.70 | 85-90% |
| 6059087403 | 3186 | Orange | 92805 | Anaheim | -117.9103184 | 33.8141312 | 47.12 | 85.69 | 85-90% |
| 6037602505 | 4072 | Los Angeles | 90250 | Hawthorne | -118.341667 | 33.9055546 | 47.12 | 85.67 | 85-90% |
| 6065940400 | 6504 | Riverside | 92236 | Coachella | -116.182178 | 33.7018202 | 47.10 | 85.66 | 85-90% |
| 6037404402 | 5107 | Los Angeles | 91702 | Azusa | -117.9236036 | 34.1209332 | 47.09 | 85.65 | 85-90% |
| 6085503601 | 2992 | Santa Clara | 95133 | San Jose | -121.8661537 | 37.3583881 | 47.09 | 85.64 | 85-90% |
| 6037530004 | 3695 | Los Angeles | 90640 | Montebello | -118.09768 | 34.0184014 | 47.08 | 85.62 | 85-90% |
| 6029000300 | 4217 | Kern | 93308 | Bakersfield | -119.0286468 | 35.4111131 | 47.07 | 85.61 | 85-90% |
| 6071002206 | 6656 | San Bernardino | 91761 | Ontario | -117.586378 | 34.0245953 | 47.07 | 85.60 | 85-90% |
| 6025011600 | 6310 | Imperial | 92243 | El Centro | -115.5611698 | 32.7871645 | 47.06 | 85.58 | 85-90% |
| 6037551102 | 5503 | Los Angeles | 90242 | Downey | -118.1206401 | 33.9259214 | 47.06 | 85.57 | 85-90% |
| 6029001300 | 7559 | Kern | 93305 | Bakersfield | -118.9880772 | 35.3822696 | 47.05 | 85.56 | 85-90% |
| 6059074403 | 5688 | Orange | 92705 | Santa Ana | -117.847018 | 33.7280675 | 47.04 | 85.55 | 85-90% |
| 6037218800 | 2658 | Los Angeles | 90018 | Los Angeles | -118.3230095 | 34.0377797 | 47.02 | 85.53 | 85-90% |
| 6037430101 | 4887 | Los Angeles | 91010 | Duarte | -117.9755668 | 34.1375469 | 46.99 | 85.52 | 85-90% |
| 6071003506 | 4802 | San Bernardino | 92376 | Rialto | -117.3778897 | 34.1293784 | 46.99 | 85.51 | 85-90% |
| 6037542501 | 4307 | Los Angeles | 90220 | Compton | -118.2367479 | 33.8907006 | 46.95 | 85.50 | 85-90% |
| 6007001300 | 4169 | Butte | 95928 | Chico | -121.8128247 | 39.7192136 | 46.95 | 85.48 | 85-90% |
| 6077005114 | 7721 | San Joaquin | 95337 | Manteca | -121.2229179 | 37.7819068 | 46.95 | 85.47 | 85-90% |
| 6037216900 | 5060 | Los Angeles | 90019 | Los Angeles | -118.3631083 | 34.0499363 | 46.94 | 85.46 | 85-90% |
| 6039001000 | 5319 | Madera | 93637 | Madera | -119.9925738 | 36.8838955 | 46.94 | 85.45 | 85-90% |
| 6099003904 | 4374 | Stanislaus | 95380 | Turlock | -120.8326517 | 37.4902919 | 46.92 | 85.43 | 85-90% |
| 6037535605 | 4153 | Los Angeles | 90280 | South Gate | -118.2165071 | 33.9487813 | 46.92 | 85.42 | 85-90% |
| 6037404401 | 3979 | Los Angeles | 91702 | Azusa | -117.91619 | 34.1292276 | 46.92 | 85.41 | 85-90% |
| 6001401400 | 4314 | Alameda | 94608 | Emeryville | -122.2733758 | 37.8207387 | 46.92 | 85.40 | 85-90% |
| 6037231800 | 5303 | Los Angeles | 90037 | Los Angeles | -118.2774651 | 34.0074446 | 46.92 | 85.38 | 85-90% |
| 6071005200 | 4141 | San Bernardino | 92404 | San Bernardino | -117.2817187 | 34.1445254 | 46.92 | 85.37 | 85-90% |
| 6029004000 | 7704 | Kern | 93263 | Shafter | -119.2918485 | 35.516438 | 46.91 | 85.36 | 85-90% |
| 6071006402 | 4951 | San Bernardino | 92410 | San Bernardino | -117.2523402 | 34.1157592 | 46.90 | 85.34 | 85-90% |
| 6071003302 | 6037 | San Bernardino | 92316 | Bloomington | -117.4226926 | 34.0726027 | 46.89 | 85.33 | 85-90% |
| 6037550300 | 7727 | Los Angeles | 90650 | Norwalk | -118.1013655 | 33.9257822 | 46.87 | 85.32 | 85-90% |
| 6037980010 | 164 | Los Angeles | 90012 | Los Angeles | -118.2393993 | 34.0786561 | 46.87 | 85.31 | 85-90% |
| 6065031704 | 5284 | Riverside | 92504 | Riverside | -117.4211712 | 33.9186451 | 46.87 | 85.29 | 85-90% |
| 6019005608 | 3064 | Fresno | 93612 | Clovis | -119.7194878 | 36.8119204 | 46.86 | 85.28 | 85-90% |
| 6019003302 | 4749 | Fresno | 93703 | Fresno | -119.7635149 | 36.7686679 | 46.86 | 85.27 | 85-90% |
| 6037190902 | 3960 | Los Angeles | 90038 | Los Angeles | -118.319013 | 34.094395 | 46.85 | 85.26 | 85-90% |
| 6037209401 | 3914 | Los Angeles | 90057 | Los Angeles | -118.2815247 | 34.0567212 | 46.85 | 85.24 | 85-90% |
| 6077005126 | 4131 | San Joaquin | 95336 | Manteca | -121.2217376 | 37.8193804 | 46.85 | 85.23 | 85-90% |
| 6029004200 | 1320 | Kern | 93263 | Shafter | -119.3805277 | 35.4822316 | 46.83 | 85.22 | 85-90% |
| 6073003501 | 4255 | San Diego | 92113 | San Diego | -117.1145576 | 32.706039 | 46.82 | 85.21 | 85-90% |
| 6037127711 | 3356 | Los Angeles | 91406 | Van Nuys | -118.4698195 | 34.1879585 | 46.80 | 85.19 | 85-90% |
| 6073015901 | 3450 | San Diego | 92020 | El Cajon | -116.9691572 | 32.7904464 | 46.78 | 85.18 | 85-90% |
| 6037231210 | 3688 | Los Angeles | 90037 | Los Angeles | -118.2980282 | 34.0145285 | 46.77 | 85.17 | 85-90% |
| 6047001501 | 2693 | Merced | 95341 | Merced | -120.514891 | 37.2921587 | 46.76 | 85.16 | 85-90% |
| 6065043401 | 5791 | Riverside | 92543 | Hemet | -116.9695083 | 33.7475602 | 46.75 | 85.14 | 85-90% |
| 6037132002 | 3299 | Los Angeles | 91406 | Van Nuys | -118.507196 | 34.1948951 | 46.74 | 85.13 | 85-90% |
| 6037234300 | 4098 | Los Angeles | 90008 | Los Angeles | -118.329022 | 34.0073786 | 46.73 | 85.12 | 85-90% |
| 6065042405 | 4997 | Riverside | 92557 | Moreno Valley | -117.2526709 | 33.9438284 | 46.69 | 85.11 | 85-90% |
| 6085503122 | 3449 | Santa Clara | 95112 | San Jose | -121.8568692 | 37.3125122 | 46.69 | 85.09 | 85-90% |
| 6037407102 | 5445 | Los Angeles | 91746 | La Puente | -117.9767958 | 34.0437456 | 46.69 | 85.08 | 85-90% |
| 6071006203 | 4771 | San Bernardino | 92404 | San Bernardino | -117.2514331 | 34.1456763 | 46.69 | 85.07 | 85-90% |
| 6099001100 | 3899 | Stanislaus | 95350 | Modesto | -120.9877386 | 37.6627186 | 46.68 | 85.05 | 85-90% |
| 6029002900 | 7449 | Kern | 93304 | Bakersfield | -119.0303423 | 35.3322843 | 46.68 | 85.04 | 85-90% |
| 6071008002 | 7256 | San Bernardino | 92374 | Redlands | -117.1852589 | 34.0663497 | 46.66 | 85.03 | 85-90% |
| 6065042516 | 4177 | Riverside | 92553 | Moreno Valley | -117.2393879 | 33.9227363 | 46.65 | 85.02 | 85-90% |
| 6037433403 | 4675 | Los Angeles | 91732 | El Monte | -118.0270375 | 34.0627564 | 46.64 | 85.00 | 85-90% |
| 6001403000 | 2788 | Alameda | 94607 | Oakland | -122.270732 | 37.8004265 | 46.63 | 84.99 | 80-85% |
| 6037544001 | 4791 | Los Angeles | 90810 | Long Beach | -118.2165909 | 33.8388248 | 46.63 | 84.98 | 80-85% |
| 6071001103 | 3997 | San Bernardino | 91762 | Ontario | -117.6561451 | 34.0789551 | 46.63 | 84.97 | 80-85% |
| 6071003000 | 3120 | San Bernardino | 92335 | Fontana | -117.4357865 | 34.0993753 | 46.62 | 84.95 | 80-85% |
| 6065042514 | 3165 | Riverside | 92553 | Moreno Valley | -117.2481693 | 33.9336217 | 46.62 | 84.94 | 80-85% |
| 6037554302 | 3916 | Los Angeles | 90706 | Bellflower | -118.146903 | 33.8729892 | 46.62 | 84.93 | 80-85% |
| 6037310601 | 5716 | Los Angeles | 91504 | Burbank | -118.3272409 | 34.1936348 | 46.61 | 84.92 | 80-85% |
| 6037531201 | 5335 | Los Angeles | 90063 | Los Angeles | -118.1860673 | 34.0297365 | 46.60 | 84.90 | 80-85% |
| 6037191301 | 2327 | Los Angeles | 90029 | Los Angeles | -118.2865853 | 34.0923345 | 46.58 | 84.89 | 80-85% |
| 6037133000 | 4449 | Los Angeles | 91335 | Reseda | -118.5571125 | 34.196082 | 46.56 | 84.88 | 80-85% |
| 6077005123 | 4493 | San Joaquin | 95337 | Manteca | -121.2438237 | 37.8046754 | 46.54 | 84.87 | 80-85% |
| 6013305000 | 6620 | Contra Costa | 94509 | Antioch | -121.8340512 | 38.015682 | 46.53 | 84.85 | 80-85% |
| 6037270100 | 4412 | Los Angeles | 90034 | Los Angeles | -118.3959685 | 34.0273439 | 46.49 | 84.84 | 80-85% |
| 6067006702 | 7560 | Sacramento | 95838 | Sacramento | -121.459252 | 38.6327403 | 46.49 | 84.83 | 80-85% |
| 6107000202 | 2663 | Tulare | 93646 | Orange Cove | -119.2556351 | 36.6023032 | 46.49 | 84.82 | 80-85% |
| 6037501001 | 3248 | Los Angeles | 90606 | Whittier | -118.0706273 | 33.9903098 | 46.47 | 84.80 | 80-85% |
| 6013380000 | 5706 | Contra Costa | 94804 | Richmond | -122.3560521 | 37.8969709 | 46.47 | 84.79 | 80-85% |
| 6037403000 | 6835 | Los Angeles | 91766 | Pomona | -117.7572801 | 34.0378439 | 46.47 | 84.78 | 80-85% |
| 6037238200 | 5267 | Los Angeles | 90044 | Los Angeles | -118.2979777 | 33.9634958 | 46.47 | 84.76 | 80-85% |
| 6037208720 | 4179 | Los Angeles | 90057 | Los Angeles | -118.2811045 | 34.0627628 | 46.47 | 84.75 | 80-85% |
| 6065030900 | 3308 | Riverside | 92504 | Riverside | -117.4411265 | 33.9577091 | 46.46 | 84.74 | 80-85% |
| 6037600100 | 6657 | Los Angeles | 90044 | Los Angeles | -118.2956255 | 33.9551471 | 46.44 | 84.73 | 80-85% |
| 6077005202 | 6765 | San Joaquin | 95304 | Tracy | -121.3695435 | 37.7666663 | 46.40 | 84.71 | 80-85% |
| 6037191420 | 3365 | Los Angeles | 90029 | Los Angeles | -118.2881029 | 34.0851215 | 46.40 | 84.70 | 80-85% |
| 6037570303 | 4247 | Los Angeles | 90805 | Long Beach | -118.1925812 | 33.8596484 | 46.38 | 84.69 | 80-85% |
| 6019003201 | 4398 | Fresno | 93703 | Fresno | -119.7430752 | 36.7759071 | 46.37 | 84.68 | 80-85% |
| 6037302104 | 3917 | Los Angeles | 91205 | Glendale | -118.2320864 | 34.1454079 | 46.32 | 84.66 | 80-85% |
| 6019001408 | 2504 | Fresno | 93727 | Fresno | -119.7276686 | 36.7252331 | 46.32 | 84.65 | 80-85% |
| 6071007110 | 4831 | San Bernardino | 92324 | Colton | -117.2886811 | 34.0569257 | 46.27 | 84.64 | 80-85% |
| 6071004510 | 5178 | San Bernardino | 92407 | San Bernardino | -117.3194653 | 34.1853082 | 46.26 | 84.63 | 80-85% |
| 6013375000 | 4389 | Contra Costa | 94801 | Richmond | -122.3518215 | 37.9402568 | 46.26 | 84.61 | 80-85% |
| 6037502401 | 4747 | Los Angeles | 90660 | Pico Rivera | -118.0968738 | 33.976375 | 46.25 | 84.60 | 80-85% |
| 6073005300 | 6667 | San Diego | 92101 | San Diego | -117.1615102 | 32.7156831 | 46.24 | 84.59 | 80-85% |
| 6071003510 | 4512 | San Bernardino | 92376 | Rialto | -117.392199 | 34.0995052 | 46.24 | 84.58 | 80-85% |
| 6001401700 | 2667 | Alameda | 94607 | Oakland | -122.3193044 | 37.8134257 | 46.23 | 84.56 | 80-85% |
| 6037433503 | 3108 | Los Angeles | 91733 | South El Monte | -118.0487816 | 34.054936 | 46.22 | 84.55 | 80-85% |
| 6037237720 | 3153 | Los Angeles | 90044 | Los Angeles | -118.2861511 | 33.9692863 | 46.22 | 84.54 | 80-85% |
| 6037221110 | 3565 | Los Angeles | 90006 | Los Angeles | -118.2878287 | 34.0457195 | 46.22 | 84.53 | 80-85% |
| 6073005700 | 1948 | San Diego | 92101 | San Diego | -117.1625607 | 32.7252818 | 46.21 | 84.51 | 80-85% |
| 6037234501 | 2728 | Los Angeles | 90043 | Los Angeles | -118.3244351 | 33.9974948 | 46.21 | 84.50 | 80-85% |
| 6037432901 | 4464 | Los Angeles | 91770 | Rosemead | -118.0708582 | 34.0766629 | 46.20 | 84.49 | 80-85% |
| 6019003808 | 5082 | Fresno | 93722 | Fresno | -119.8712132 | 36.7590356 | 46.19 | 84.47 | 80-85% |
| 6071001810 | 4497 | San Bernardino | 91761 | Ontario | -117.6440311 | 34.0339115 | 46.19 | 84.46 | 80-85% |
| 6019004207 | 8115 | Fresno | 93723 | Fresno | -119.9111587 | 36.8163153 | 46.17 | 84.45 | 80-85% |
| 6059099601 | 7016 | Orange | 92683 | Westminster | -118.0061687 | 33.749641 | 46.16 | 84.44 | 80-85% |
| 6025010200 | 2640 | Imperial | 92281 | Westmorland | -115.6689803 | 33.0633411 | 46.15 | 84.42 | 80-85% |
| 6037121102 | 2721 | Los Angeles | 91352 | Sun Valley | -118.3841883 | 34.2375326 | 46.14 | 84.41 | 80-85% |
| 6037701801 | 5867 | Los Angeles | 90404 | Santa Monica | -118.4657238 | 34.0274538 | 46.13 | 84.40 | 80-85% |
| 6029000600 | 6931 | Kern | 93301 | Bakersfield | -119.0135607 | 35.3952759 | 46.12 | 84.39 | 80-85% |
| 6037197420 | 3509 | Los Angeles | 90026 | Los Angeles | -118.2571856 | 34.0832 | 46.10 | 84.37 | 80-85% |
| 6037555001 | 5411 | Los Angeles | 90715 | Lakewood | -118.0882639 | 33.8430305 | 46.10 | 84.36 | 80-85% |
| 6037553200 | 7055 | Los Angeles | 90706 | Bellflower | -118.1205611 | 33.9049648 | 46.08 | 84.35 | 80-85% |
| 6071003700 | 3903 | San Bernardino | 92376 | Rialto | -117.3703725 | 34.0995419 | 46.06 | 84.34 | 80-85% |
| 6037602003 | 5124 | Los Angeles | 90303 | Inglewood | -118.3393882 | 33.9343496 | 46.05 | 84.32 | 80-85% |
| 6019004002 | 7129 | Fresno | 93630 | Kerman | -120.0422516 | 36.7349023 | 46.04 | 84.31 | 80-85% |
| 6037407802 | 3635 | Los Angeles | 91744 | La Puente | -117.9348633 | 34.0229331 | 46.04 | 84.30 | 80-85% |
| 6059074406 | 3797 | Orange | 92701 | Santa Ana | -117.8492851 | 33.7481442 | 46.04 | 84.29 | 80-85% |
| 6099003201 | 5055 | Stanislaus | 95363 | Patterson | -121.1191974 | 37.4731094 | 46.03 | 84.27 | 80-85% |
| 6037402706 | 3945 | Los Angeles | 91767 | Pomona | -117.7204486 | 34.0716281 | 46.03 | 84.26 | 80-85% |
| 6037533401 | 5004 | Los Angeles | 90270 | Maywood | -118.1935828 | 33.9936631 | 46.01 | 84.25 | 80-85% |
| 6037502602 | 4321 | Los Angeles | 90660 | Pico Rivera | -118.1032467 | 33.9650177 | 45.99 | 84.24 | 80-85% |
| 6037234902 | 4005 | Los Angeles | 90043 | Los Angeles | -118.3340918 | 33.9822575 | 45.99 | 84.22 | 80-85% |
| 6073003301 | 3337 | San Diego | 92113 | San Diego | -117.1018968 | 32.7027556 | 45.97 | 84.21 | 80-85% |
| 6037575202 | 4916 | Los Angeles | 90813 | Long Beach | -118.1704604 | 33.7858671 | 45.96 | 84.20 | 80-85% |
| 6029002812 | 5215 | Kern | 93309 | Bakersfield | -119.0504014 | 35.3505096 | 45.93 | 84.18 | 80-85% |
| 6019004216 | 2629 | Fresno | 93722 | Fresno | -119.9214051 | 36.842753 | 45.93 | 84.17 | 80-85% |
| 6059087102 | 5816 | Orange | 92801 | Anaheim | -117.9521947 | 33.836176 | 45.93 | 84.16 | 80-85% |
| 6073004800 | 4115 | San Diego | 92102 | San Diego | -117.1381401 | 32.708456 | 45.91 | 84.15 | 80-85% |
| 6059011720 | 7329 | Orange | 92870 | Placentia | -117.8750156 | 33.8579931 | 45.89 | 84.13 | 80-85% |
| 6085501600 | 6854 | Santa Clara | 95112 | San Jose | -121.8750532 | 37.3294823 | 45.89 | 84.12 | 80-85% |
| 6037294302 | 4754 | Los Angeles | 90744 | Wilmington | -118.2782902 | 33.7848764 | 45.88 | 84.11 | 80-85% |
| 6029003700 | 3953 | Kern | 93206 | Buttonwillow | -119.4164905 | 35.3940158 | 45.85 | 84.10 | 80-85% |
| 6059086404 | 6546 | Orange | 92805 | Anaheim | -117.8977733 | 33.8506272 | 45.84 | 84.08 | 80-85% |
| 6037217200 | 3905 | Los Angeles | 90019 | Los Angeles | -118.3424594 | 34.049584 | 45.82 | 84.07 | 80-85% |
| 6037211202 | 2645 | Los Angeles | 90004 | Los Angeles | -118.294113 | 34.0745209 | 45.82 | 84.06 | 80-85% |
| 6037320300 | 6948 | Los Angeles | 91340 | San Fernando | -118.4458616 | 34.2821477 | 45.79 | 84.05 | 80-85% |
| 6107001701 | 6117 | Tulare | 93292 | Visalia | -119.2871757 | 36.3199506 | 45.79 | 84.03 | 80-85% |
| 6037500600 | 5688 | Los Angeles | 90660 | Pico Rivera | -118.088627 | 34.0074428 | 45.78 | 84.02 | 80-85% |
| 6019006700 | 6304 | Fresno | 93654 | Reedley | -119.4549129 | 36.5869962 | 45.77 | 84.01 | 80-85% |
| 6065041813 | 6698 | Riverside | 92879 | Corona | -117.5533296 | 33.8666786 | 45.76 | 84.00 | 80-85% |
| 6037186404 | 2471 | Los Angeles | 90065 | Los Angeles | -118.2354293 | 34.1067595 | 45.76 | 83.98 | 80-85% |
| 6037236204 | 3203 | Los Angeles | 90008 | Los Angeles | -118.3491896 | 34.0147165 | 45.76 | 83.97 | 80-85% |
| 6077003403 | 4586 | San Joaquin | 95210 | Stockton | -121.3040245 | 38.0361301 | 45.76 | 83.96 | 80-85% |
| 6037208802 | 2906 | Los Angeles | 90057 | Los Angeles | -118.2786688 | 34.0621454 | 45.74 | 83.95 | 80-85% |
| 6065041412 | 4415 | Riverside | 92503 | Riverside | -117.5057387 | 33.8857174 | 45.71 | 83.93 | 80-85% |
| 6019004504 | 4762 | Fresno | 93710 | Fresno | -119.7903044 | 36.8301672 | 45.71 | 83.92 | 80-85% |
| 6037302103 | 5504 | Los Angeles | 91205 | Glendale | -118.238019 | 34.1425784 | 45.70 | 83.91 | 80-85% |
| 6071003503 | 5489 | San Bernardino | 92376 | Rialto | -117.3923222 | 34.1250104 | 45.70 | 83.89 | 80-85% |
| 6067009007 | 2818 | Sacramento | 95670 | Rancho Cordova | -121.3037699 | 38.5762723 | 45.68 | 83.88 | 80-85% |
| 6037189201 | 3293 | Los Angeles | 90027 | Los Angeles | -118.2961605 | 34.1035829 | 45.68 | 83.87 | 80-85% |
| 6019003004 | 2301 | Fresno | 93727 | Fresno | -119.7091585 | 36.746781 | 45.67 | 83.86 | 80-85% |
| 6037572302 | 3483 | Los Angeles | 90810 | Long Beach | -118.2105459 | 33.8161834 | 45.67 | 83.84 | 80-85% |
| 6037601002 | 5311 | Los Angeles | 90301 | Inglewood | -118.3475932 | 33.9565607 | 45.67 | 83.83 | 80-85% |
| 6037123104 | 4596 | Los Angeles | 91606 | North Hollywood | -118.3650028 | 34.1828906 | 45.66 | 83.82 | 80-85% |
| 6065045604 | 13694 | Riverside | 92254 | Mecca | -115.9293426 | 33.511964 | 45.66 | 83.81 | 80-85% |
| 6029004901 | 5733 | Kern | 93215 | Delano | -119.2462266 | 35.7837173 | 45.66 | 83.79 | 80-85% |
| 6039000202 | 6109 | Madera | 93610 | Chowchilla | -120.288051 | 37.0797978 | 45.63 | 83.78 | 80-85% |
| 6071007601 | 7277 | San Bernardino | 92410 | San Bernardino | -117.234947 | 34.1140263 | 45.58 | 83.77 | 80-85% |
| 6037408138 | 5936 | Los Angeles | 91744 | La Puente | -117.9159505 | 34.0193311 | 45.56 | 83.76 | 80-85% |
| 6037501504 | 3592 | Los Angeles | 90601 | Whittier | -118.0369951 | 33.9792515 | 45.55 | 83.74 | 80-85% |
| 6019008401 | 7991 | Fresno | 93622 | Firebaugh | -120.5139877 | 36.8586926 | 45.55 | 83.73 | 80-85% |
| 6037235202 | 4557 | Los Angeles | 90043 | Los Angeles | -118.330376 | 33.9730801 | 45.55 | 83.72 | 80-85% |
| 6067005101 | 4454 | Sacramento | 95828 | Sacramento | -121.4013938 | 38.4884217 | 45.54 | 83.71 | 80-85% |
| 6037222001 | 3237 | Los Angeles | 90018 | Los Angeles | -118.3132805 | 34.0281954 | 45.54 | 83.69 | 80-85% |
| 6037500404 | 4795 | Los Angeles | 90660 | Pico Rivera | -118.0739965 | 34.0139543 | 45.52 | 83.68 | 80-85% |
| 6037533107 | 3645 | Los Angeles | 90255 | Huntington Park | -118.2164699 | 33.9745613 | 45.52 | 83.67 | 80-85% |
| 6059001404 | 3972 | Orange | 90631 | La Habra | -117.9292135 | 33.9247336 | 45.51 | 83.65 | 80-85% |
| 6073013205 | 2381 | San Diego | 91911 | Chula Vista | -117.0802103 | 32.5966578 | 45.50 | 83.64 | 80-85% |
| 6037197300 | 3909 | Los Angeles | 90026 | Los Angeles | -118.2520467 | 34.0811373 | 45.50 | 83.63 | 80-85% |
| 6019007600 | 4806 | Fresno | 93706 | Fresno | -119.9430164 | 36.580566 | 45.49 | 83.62 | 80-85% |
| 6001432400 | 5814 | Alameda | 94577 | San Leandro | -122.1898921 | 37.7097451 | 45.48 | 83.60 | 80-85% |
| 6037199202 | 3031 | Los Angeles | 90031 | Los Angeles | -118.2032952 | 34.0812835 | 45.48 | 83.59 | 80-85% |
| 6037301802 | 3578 | Los Angeles | 91203 | Glendale | -118.2597025 | 34.1492141 | 45.47 | 83.58 | 80-85% |
| 6047000601 | 5438 | Merced | 95301 | Atwater | -120.62207 | 37.3603045 | 45.47 | 83.57 | 80-85% |
| 6071000205 | 4736 | San Bernardino | 91763 | Montclair | -117.6870214 | 34.0801578 | 45.46 | 83.55 | 80-85% |
| 6037120010 | 2844 | Los Angeles | 91402 | Panorama City | -118.4622655 | 34.2191995 | 45.46 | 83.54 | 80-85% |
| 6037601900 | 5685 | Los Angeles | 90303 | Inglewood | -118.3395043 | 33.9415861 | 45.45 | 83.53 | 80-85% |
| 6065041500 | 2053 | Riverside | 92880 | Corona | -117.5993419 | 33.892232 | 45.44 | 83.52 | 80-85% |
| 6065041201 | 4299 | Riverside | 92503 | Riverside | -117.4621002 | 33.923878 | 45.42 | 83.50 | 80-85% |
| 6099000303 | 5883 | Stanislaus | 95367 | Riverbank | -120.9427859 | 37.7243903 | 45.41 | 83.49 | 80-85% |
| 6073011700 | 6773 | San Diego | 91950 | National City | -117.0970458 | 32.6738101 | 45.40 | 83.48 | 80-85% |
| 6065041409 | 14898 | Riverside | 92503 | Riverside | -117.4758226 | 33.8649931 | 45.38 | 83.47 | 80-85% |
| 6071003606 | 5109 | San Bernardino | 92316 | Bloomington | -117.396582 | 34.0730055 | 45.37 | 83.45 | 80-85% |
| 6037501804 | 2131 | Los Angeles | 90602 | Whittier | -118.0349208 | 33.9698819 | 45.37 | 83.44 | 80-85% |
| 6065040403 | 5801 | Riverside | 92509 | Riverside | -117.4960233 | 33.9918252 | 45.36 | 83.43 | 80-85% |
| 6037570601 | 5421 | Los Angeles | 90805 | Long Beach | -118.1809849 | 33.8569402 | 45.35 | 83.42 | 80-85% |
| 6037224320 | 3224 | Los Angeles | 90015 | Los Angeles | -118.280853 | 34.0415884 | 45.35 | 83.40 | 80-85% |
| 6037204120 | 2650 | Los Angeles | 90063 | Los Angeles | -118.201168 | 34.0338905 | 45.34 | 83.39 | 80-85% |
| 6037554002 | 5659 | Los Angeles | 90706 | Bellflower | -118.1336322 | 33.8922721 | 45.33 | 83.38 | 80-85% |
| 6019005607 | 3993 | Fresno | 93612 | Clovis | -119.7182723 | 36.8194376 | 45.33 | 83.36 | 80-85% |
| 6107001100 | 6983 | Tulare | 93291 | Visalia | -119.3005779 | 36.3379779 | 45.33 | 83.35 | 80-85% |
| 6037127606 | 3164 | Los Angeles | 91406 | Van Nuys | -118.4777891 | 34.1902662 | 45.33 | 83.34 | 80-85% |

| | | | | | | | | | | | | | | |
|---|---|---|---|---|---|---|---|---|---|---|---|---|---|---|
| 6037104403 | 3282 | Los Angeles | 91331 | Pacoima | -118.4344849 | 34.2587738 | 45.32 | 83.33 | 80-85% | Yes | 0.057 | 82.10 | 11.21 | 66.23 |
| 6019005000 | 3917 | Fresno | 93726 | Fresno | -119.7904326 | 36.8012804 | 45.30 | 83.31 | 80-85% | Yes | 0.065 | 98.18 | 15.4 | 97.22 |
| 6037240401 | 5383 | Los Angeles | 90044 | Los Angeles | -118.2857119 | 33.949919 | 45.29 | 83.30 | 80-85% | Yes | 0.044 | 40.49 | 12.05 | 81.66 |
| 6065031602 | 5314 | Riverside | 92503 | Riverside | -117.448479 | 33.9268256 | 45.29 | 83.29 | 80-85% | Yes | 0.062 | 91.10 | 12.89 | 92.89 |
| 6037104103 | 4085 | Los Angeles | 91342 | Sylmar | -118.3925764 | 34.2820993 | 45.29 | 83.28 | 80-85% | Yes | 0.055 | 77.87 | 11.21 | 66.23 |
| 6111004715 | 5020 | Ventura | 93033 | Oxnard | -119.1490764 | 34.140882 | 45.27 | 83.26 | 80-85% | Yes | 0.044 | 40.49 | 9.53630303 | 40.92 |
| 6037554203 | 3689 | Los Angeles | 90706 | Bellflower | -118.1247134 | 33.8802194 | 45.27 | 83.25 | 80-85% | Yes | 0.044 | 40.49 | 12.05 | 81.66 |
| 6059011721 | 5023 | Orange | 92870 | Placentia | -117.8729877 | 33.8703829 | 45.26 | 83.24 | 80-85% | Yes | 0.048 | 60.88 | 11.21 | 66.23 |
| 6019005305 | 3635 | Fresno | 93726 | Fresno | -119.7429704 | 36.7977961 | 45.26 | 83.23 | 80-85% | Yes | 0.065 | 98.18 | 15.4 | 97.22 |
| 6059086306 | 3658 | Orange | 92806 | Anaheim | -117.877059 | 33.8232178 | 45.25 | 83.21 | 80-85% | Yes | 0.046 | 53.02 | 11.21 | 66.23 |
| 6037572100 | 1045 | Los Angeles | 90806 | Long Beach | -118.2035057 | 33.8238924 | 45.22 | 83.20 | 80-85% | Yes | 0.042 | 31.84 | 11.21 | 66.23 |
| 6085503110 | 4618 | Santa Clara | 95122 | San Jose | -121.8498004 | 37.3331809 | 45.22 | 83.19 | 80-85% | Yes | 0.038 | 22.34 | 10.37 | 52.61 |
| 6059074602 | 9156 | Orange | 92701 | Santa Ana | -117.8640231 | 33.7363817 | 45.22 | 83.18 | 80-85% | Yes | 0.046 | 53.02 | 10.37 | 52.61 |
| 6059086402 | 5651 | Orange | 92806 | Anaheim | -117.8849288 | 33.8462667 | 45.22 | 83.16 | 80-85% | Yes | 0.046 | 53.02 | 11.21 | 66.23 |
| 6047001002 | 13467 | Merced | 95348 | Merced | -120.4935293 | 37.3407645 | 45.22 | 83.15 | 80-85% | Yes | 0.057 | 82.10 | 12.89 | 92.89 |
| 6059089001 | 7154 | Orange | 92703 | Santa Ana | -117.9332194 | 33.7523664 | 45.21 | 83.14 | 80-85% | Yes | 0.046 | 53.02 | 11.21 | 66.23 |
| 6037402403 | 5381 | Los Angeles | 91768 | Pomona | -117.8132614 | 34.0502857 | 45.20 | 83.13 | 80-85% | Yes | 0.057 | 82.10 | 12.05 | 81.66 |
| 6029001400 | 7766 | Kern | 93305 | Bakersfield | -118.9846462 | 35.3922701 | 45.20 | 83.11 | 80-85% | Yes | 0.062 | 91.10 | 18.76 | 99.64 |
| 6077003110 | 3708 | San Joaquin | 95207 | Stockton | -121.3236839 | 38.0063696 | 45.19 | 83.10 | 80-85% | Yes | 0.046 | 53.02 | 13.44 | 94.00 |
| 6037407602 | 4008 | Los Angeles | 91744 | La Puente | -117.9468466 | 34.0323937 | 45.19 | 83.09 | 80-85% | Yes | 0.051 | 69.23 | 11.21 | 66.23 |
| 6037602004 | 4126 | Los Angeles | 90303 | Inglewood | -118.3306448 | 33.934328 | 45.18 | 83.07 | 80-85% | Yes | 0.044 | 40.49 | 12.05 | 81.66 |
| 6029003103 | 3979 | Kern | 93307 | Bakersfield | -118.9945268 | 35.3095656 | 45.17 | 83.06 | 80-85% | Yes | 0.065 | 98.18 | 19.6 | 100.00 |
| 6037600902 | 6613 | Los Angeles | 90302 | Inglewood | -118.3522568 | 33.9720411 | 45.15 | 83.05 | 80-85% | Yes | 0.046 | 53.02 | 12.05 | 81.66 |
| 6095250801 | 3917 | Solano | 94592 | Vallejo | -122.3302426 | 38.1293945 | 45.15 | 83.04 | 80-85% | Yes | 0.035 | 16.94 | 7.85958451 | 17.81 |
| 6071003509 | 4827 | San Bernardino | 92376 | Rialto | -117.3776534 | 34.103182 | 45.15 | 83.02 | 80-85% | Yes | 0.065 | 98.18 | 12.89 | 92.89 |
| 6067009318 | 2620 | Sacramento | 95828 | Sacramento | -121.3993657 | 38.4778971 | 45.14 | 83.01 | 80-85% | Yes | 0.050 | 64.80 | 9.53630303 | 40.92 |
| 6037211310 | 3846 | Los Angeles | 90004 | Los Angeles | -118.298493 | 34.0709091 | 45.10 | 83.00 | 80-85% | Yes | 0.048 | 60.88 | 12.89 | 92.89 |
| 6037550100 | 7518 | Los Angeles | 90650 | Norwalk | -118.0760625 | 33.9237304 | 45.10 | 82.99 | 80-85% | Yes | 0.046 | 53.02 | 12.05 | 81.66 |
| 6037213201 | 4198 | Los Angeles | 90006 | Los Angeles | -118.3045301 | 34.0526559 | 45.10 | 82.97 | 80-85% | Yes | 0.048 | 60.88 | 12.89 | 92.89 |
| 6019005301 | 5740 | Fresno | 93726 | Fresno | -119.7678173 | 36.7977186 | 45.09 | 82.96 | 80-85% | Yes | 0.065 | 98.18 | 15.4 | 97.22 |
| 6029004101 | 4917 | Kern | 93263 | Shafter | -119.2719891 | 35.5063506 | 45.08 | 82.95 | 80-85% | Yes | 0.062 | 91.10 | 18.76 | 99.64 |
| 6019004704 | 5212 | Fresno | 93705 | Fresno | -119.8352485 | 36.7829438 | 45.08 | 82.94 | 80-85% | Yes | 0.062 | 91.10 | 15.4 | 97.22 |
| 6037237102 | 3254 | Los Angeles | 90044 | Los Angeles | -118.2837235 | 33.9857553 | 45.07 | 82.92 | 80-85% | Yes | 0.046 | 53.02 | 12.47 | 83.99 |
| 6037432201 | 4342 | Los Angeles | 91770 | Rosemead | -118.0827115 | 34.0871355 | 45.06 | 82.91 | 80-85% | Yes | 0.050 | 64.80 | 11.21 | 66.23 |
| 6037601100 | 6533 | Los Angeles | 90301 | Inglewood | -118.3482313 | 33.9490818 | 45.06 | 82.90 | 80-85% | Yes | 0.046 | 53.02 | 12.05 | 81.66 |
| 6037234600 | 5024 | Los Angeles | 90043 | Los Angeles | -118.327561 | 33.9920177 | 45.05 | 82.89 | 80-85% | Yes | 0.046 | 53.02 | 12.05 | 81.66 |
| 6067004801 | 5899 | Sacramento | 95828 | Sacramento | -121.4221792 | 38.5067176 | 45.03 | 82.87 | 80-85% | Yes | 0.048 | 60.88 | 9.53630303 | 40.92 |
| 6047000301 | 4790 | Merced | 95334 | Livingston | -120.6908186 | 37.4002299 | 45.03 | 82.86 | 80-85% | Yes | 0.057 | 82.10 | 12.89 | 92.89 |
| 6099003805 | 2667 | Stanislaus | 95380 | Turlock | -120.8771501 | 37.5161592 | 45.02 | 82.85 | 80-85% | Yes | 0.057 | 82.10 | 12.89 | 92.89 |
| 6031001002 | 4424 | Kings | 93230 | Hanford | -119.6671974 | 36.3196581 | 45.02 | 82.84 | 80-85% | Yes | 0.062 | 91.10 | 17.08 | 98.60 |
| 6037218600 | 3142 | Los Angeles | 90016 | Los Angeles | -118.3427412 | 34.0371852 | 45.00 | 82.82 | 80-85% | Yes | 0.048 | 60.88 | 12.47 | 83.99 |
| 6037554204 | 4391 | Los Angeles | 90706 | Bellflower | -118.128584 | 33.8847475 | 44.99 | 82.81 | 80-85% | Yes | 0.044 | 40.49 | 12.05 | 81.66 |
| 6087110400 | 7976 | Santa Cruz | 95076 | Watsonville | -121.7704821 | 36.9043838 | 44.98 | 82.80 | 80-85% | Yes | 0.038 | 22.34 | 5.76368635 | 4.73 |
| 6099002802 | 6310 | Stanislaus | 95357 | Modesto | -120.8368597 | 37.6638136 | 44.96 | 82.78 | 80-85% | Yes | 0.055 | 77.87 | 12.89 | 92.89 |
| 6037601801 | 3789 | Los Angeles | 90304 | Inglewood | -118.3504258 | 33.9436357 | 44.96 | 82.77 | 80-85% | Yes | 0.044 | 40.49 | 12.05 | 81.66 |
| 6019006100 | 7536 | Fresno | 93657 | Sanger | -119.5726544 | 36.6910426 | 44.95 | 82.76 | 80-85% | Yes | 0.065 | 98.18 | 15.82 | 97.49 |
| 6037119340 | 3884 | Los Angeles | 91402 | Panorama City | -118.4519009 | 34.233609 | 44.93 | 82.75 | 80-85% | Yes | 0.057 | 82.10 | 11.21 | 66.23 |
| 6019006502 | 4159 | Fresno | 93646 | Orange Cove | -119.3274871 | 36.6466582 | 44.93 | 82.73 | 80-85% | Yes | 0.065 | 98.18 | 15.4 | 97.22 |
| 6037106648 | 3890 | Los Angeles | 91342 | Sylmar | -118.4558345 | 34.2930983 | 44.93 | 82.72 | 80-85% | Yes | 0.057 | 82.10 | 11.21 | 66.23 |
| 6107001004 | 8235 | Tulare | 93291 | Visalia | -119.2957398 | 36.3521706 | 44.92 | 82.71 | 80-85% | Yes | 0.060 | 85.21 | 17.08 | 98.60 |
| 6037600400 | 3986 | Los Angeles | 90047 | Los Angeles | -118.3140872 | 33.9369542 | 44.92 | 82.70 | 80-85% | Yes | 0.044 | 40.49 | 12.05 | 81.66 |
| 6037127806 | 3447 | Los Angeles | 91411 | Van Nuys | -118.4572359 | 34.1885731 | 44.92 | 82.68 | 80-85% | Yes | 0.055 | 77.87 | 11.21 | 66.23 |
| 6001433200 | 6897 | Alameda | 94578 | San Leandro | -122.1470769 | 37.70175 | 44.90 | 82.67 | 80-85% | Yes | 0.030 | 7.58 | 8.69794377 | 30.70 |
| 6037195600 | 3340 | Los Angeles | 90026 | Los Angeles | -118.2655482 | 34.0808254 | 44.88 | 82.66 | 80-85% | Yes | 0.046 | 53.02 | 12.89 | 92.89 |
| 6037534002 | 4352 | Los Angeles | 90201 | Bell | -118.1399857 | 33.9674778 | 44.88 | 82.65 | 80-85% | Yes | 0.046 | 53.02 | 12.05 | 81.66 |
| 6107003200 | 6446 | Tulare | 93272 | Tipton | -119.3368879 | 36.056592 | 44.87 | 82.63 | 80-85% | Yes | 0.062 | 91.10 | 16.66 | 97.90 |
| 6037209520 | 2791 | Los Angeles | 90006 | Los Angeles | -118.2769503 | 34.0505519 | 44.86 | 82.62 | 80-85% | Yes | 0.046 | 53.02 | 12.89 | 92.89 |
| 6037269700 | 4085 | Los Angeles | 90034 | Los Angeles | -118.387153 | 34.036336 | 44.84 | 82.61 | 80-85% | Yes | 0.046 | 53.02 | 12.05 | 81.66 |
| 6001409300 | 5229 | Alameda | 94603 | Oakland | -122.1733521 | 37.737851 | 44.83 | 82.60 | 80-85% | Yes | 0.030 | 7.58 | 8.69794377 | 30.70 |
| 6019005403 | 4171 | Fresno | 93710 | Fresno | -119.7632007 | 36.8121984 | 44.83 | 82.58 | 80-85% | Yes | 0.065 | 98.18 | 15.4 | 97.22 |
| 6065030200 | 4633 | Riverside | 92501 | Riverside | -117.3950678 | 33.9814743 | 44.83 | 82.57 | 80-85% | Yes | 0.065 | 98.18 | 12.89 | 92.89 |
| 6037543322 | 6611 | Los Angeles | 90746 | Carson | -118.2569604 | 33.8525481 | 44.82 | 82.56 | 80-85% | Yes | 0.042 | 31.84 | 12.05 | 81.66 |
| 6053010101 | 4518 | Monterey | 95039 | Moss Landing | -121.7816321 | 36.8633033 | 44.80 | 82.55 | 80-85% | Yes | 0.038 | 22.34 | 5.34450672 | 3.92 |
| 6037602507 | 4156 | Los Angeles | 90250 | Hawthorne | -118.3308405 | 33.9037379 | 44.78 | 82.53 | 80-85% | Yes | 0.044 | 40.49 | 12.05 | 81.66 |
| 6047001401 | 3953 | Merced | 95340 | Merced | -120.4642087 | 37.2986943 | 44.77 | 82.52 | 80-85% | Yes | 0.057 | 82.10 | 12.89 | 92.89 |
| 6071000605 | 5274 | San Bernardino | 91710 | Chino | -117.6893011 | 34.0155079 | 44.76 | 82.51 | 80-85% | Yes | 0.060 | 85.21 | 12.89 | 92.89 |
| 6037552601 | 5720 | Los Angeles | 90650 | Norwalk | -118.0776264 | 33.8913016 | 44.75 | 82.49 | 80-85% | Yes | 0.044 | 40.49 | 11.63 | 69.14 |
| 6037203900 | 2944 | Los Angeles | 90063 | Los Angeles | -118.1944844 | 34.0333782 | 44.73 | 82.48 | 80-85% | Yes | 0.046 | 53.02 | 12.89 | 92.89 |
| 6037407001 | 5905 | Los Angeles | 91746 | La Puente | -117.979529 | 34.0595763 | 44.73 | 82.47 | 80-85% | Yes | 0.051 | 69.23 | 11.21 | 66.23 |
| 6065044000 | 2109 | Riverside | 92223 | Beaumont | -116.9768263 | 33.9269395 | 44.73 | 82.46 | 80-85% | Yes | 0.065 | 98.18 | 9.1171234 | 32.61 |
| 6037190100 | 4481 | Los Angeles | 90028 | Los Angeles | -118.3416948 | 34.0994853 | 44.72 | 82.44 | 80-85% | Yes | 0.050 | 64.80 | 12.05 | 81.66 |
| 6037575103 | 5119 | Los Angeles | 90804 | Long Beach | -118.1534873 | 33.7861933 | 44.70 | 82.43 | 80-85% | Yes | 0.042 | 31.84 | 11.21 | 66.23 |
| 6037541802 | 5431 | Los Angeles | 90262 | Lynwood | -118.1867665 | 33.9098344 | 44.69 | 82.42 | 80-85% | Yes | 0.044 | 40.49 | 12.05 | 81.66 |
| 6037269601 | 3413 | Los Angeles | 90034 | Los Angeles | -118.3794518 | 34.0418546 | 44.69 | 82.41 | 80-85% | Yes | 0.046 | 53.02 | 12.05 | 81.66 |
| 6001401500 | 2630 | Alameda | 94608 | Emeryville | -122.2806358 | 37.8229232 | 44.68 | 82.39 | 80-85% | Yes | 0.030 | 7.58 | 8.69794377 | 30.70 |
| 6039000503 | 8539 | Madera | 93637 | Madera | -120.1734248 | 36.9703496 | 44.68 | 82.38 | 80-85% | Yes | 0.060 | 85.21 | 12.47 | 83.99 |
| 6037221710 | 2621 | Los Angeles | 90007 | Los Angeles | -118.2876316 | 34.0346981 | 44.67 | 82.37 | 80-85% | Yes | 0.046 | 53.02 | 12.89 | 92.89 |
| 6029003113 | 4784 | Kern | 93304 | Bakersfield | -119.0288352 | 35.3179748 | 44.67 | 82.36 | 80-85% | Yes | 0.065 | 98.18 | 19.18 | 99.86 |
| 6037191110 | 3338 | Los Angeles | 90027 | Los Angeles | -118.3049408 | 34.0965841 | 44.62 | 82.34 | 80-85% | Yes | 0.050 | 64.80 | 12.89 | 92.89 |
| 6067003204 | 5456 | Sacramento | 95824 | Sacramento | -121.418331 | 38.5205734 | 44.59 | 82.33 | 80-85% | Yes | 0.048 | 60.88 | 9.53630303 | 40.92 |
| 6071004403 | 5647 | San Bernardino | 92410 | San Bernardino | -117.3409608 | 34.0928313 | 44.58 | 82.32 | 80-85% | Yes | 0.065 | 98.18 | 12.89 | 92.89 |
| 6029005204 | 6158 | Kern | 93285 | Wofford Heights | -118.6143672 | 35.476284 | 44.56 | 82.31 | 80-85% | Yes | 0.065 | 98.18 | 12.47 | 83.99 |
| 6065031502 | 8020 | Riverside | 92503 | Riverside | -117.4429741 | 33.9399352 | 44.54 | 82.29 | 80-85% | Yes | 0.062 | 91.10 | 12.89 | 92.89 |
| 6085504602 | 2144 | Santa Clara | 95002 | Alviso | -121.9948126 | 37.4495367 | 44.52 | 82.28 | 80-85% | Yes | 0.035 | 16.94 | 9.95548266 | 42.86 |
| 6085503214 | 7253 | Santa Clara | 95111 | San Jose | -121.8479711 | 37.2991814 | 44.50 | 82.27 | 80-85% | Yes | 0.038 | 22.34 | 10.37 | 52.61 |
| 6071007303 | 4828 | San Bernardino | 92354 | Loma Linda | -117.2682416 | 34.0556845 | 44.50 | 82.26 | 80-85% | Yes | 0.068 | 100.00 | 12.05 | 81.66 |
| 6037222500 | 4963 | Los Angeles | 90018 | Los Angeles | -118.3045508 | 34.0218497 | 44.50 | 82.24 | 80-85% | Yes | 0.046 | 53.02 | 12.89 | 92.89 |
| 6071003612 | 4256 | San Bernardino | 92324 | Colton | -117.3589741 | 34.0760668 | 44.48 | 82.23 | 80-85% | Yes | 0.065 | 98.18 | 12.89 | 92.89 |
| 6047000304 | 9116 | Merced | 95334 | Livingston | -120.7258108 | 37.3783216 | 44.47 | 82.22 | 80-85% | Yes | 0.057 | 82.10 | 12.89 | 92.89 |
| 6107001302 | 8037 | Tulare | 93292 | Visalia | -119.2516114 | 36.3354354 | 44.44 | 82.20 | 80-85% | Yes | 0.060 | 85.21 | 17.08 | 98.60 |
| 6037294410 | 4579 | Los Angeles | 90710 | Harbor City | -118.2898931 | 33.794128 | 44.43 | 82.19 | 80-85% | Yes | 0.042 | 31.84 | 11.21 | 66.23 |
| 6037554105 | 4569 | Los Angeles | 90706 | Bellflower | -118.1198534 | 33.8860491 | 44.42 | 82.18 | 80-85% | Yes | 0.044 | 40.49 | 12.05 | 81.66 |
| 6013366002 | 6093 | Contra Costa | 94806 | San Pablo | -122.3509331 | 37.9690044 | 44.39 | 82.17 | 80-85% | Yes | 0.030 | 7.58 | 7.85958451 | 17.81 |
| 6037407702 | 6497 | Los Angeles | 91744 | La Puente | -117.9466049 | 34.0211007 | 44.38 | 82.15 | 80-85% | Yes | 0.050 | 64.80 | 11.63 | 69.14 |
| 6019005204 | 4105 | Fresno | 93726 | Fresno | -119.76333 | 36.7904775 | 44.37 | 82.14 | 80-85% | Yes | 0.065 | 98.18 | 15.4 | 97.22 |
| 6001403300 | 4054 | Alameda | 94607 | Oakland | -122.2663244 | 37.7944308 | 44.37 | 82.13 | 80-85% | Yes | 0.030 | 7.58 | 8.69794377 | 30.70 |
| 6037535902 | 6519 | Los Angeles | 90280 | South Gate | -118.1958301 | 33.9393897 | 44.36 | 82.12 | 80-85% | Yes | 0.044 | 40.49 | 12.05 | 81.66 |
| 6065040303 | 3243 | Riverside | 92509 | Riverside | -117.4511075 | 34.008501 | 44.36 | 82.10 | 80-85% | Yes | 0.062 | 91.10 | 14.15 | 94.96 |
| 6095250900 | 2798 | Solano | 94590 | Vallejo | -122.259038 | 38.1017927 | 44.36 | 82.09 | 80-85% | Yes | 0.035 | 16.94 | 7.85958451 | 17.81 |
| 6025010102 | 5007 | Imperial | 92233 | Calipatria | -115.6086847 | 33.2254028 | 44.35 | 82.08 | 80-85% | Yes | 0.048 | 60.88 | 8.27876414 | 20.16 |
| 6019007700 | 5599 | Fresno | 93656 | Riverdale | -119.9069028 | 36.4461627 | 44.34 | 82.07 | 80-85% | Yes | 0.062 | 91.10 | 15.82 | 97.49 |
| 6059074502 | 5674 | Orange | 92707 | Santa Ana | -117.860016 | 33.7284144 | 44.33 | 82.05 | 80-85% | Yes | 0.046 | 53.02 | 10.37 | 52.61 |
| 6107004101 | 9670 | Tulare | 93257 | Porterville | -119.0217027 | 36.0577198 | 44.29 | 82.04 | 80-85% | Yes | 0.065 | 98.18 | 17.08 | 98.60 |
| 6101050302 | 6071 | Sutter | 95991 | Yuba City | -121.6114867 | 39.123665 | 44.28 | 82.03 | 80-85% | Yes | 0.048 | 60.88 | 8.69794377 | 30.70 |
| 6071009116 | 6717 | San Bernardino | 92301 | Adelanto | -117.4107067 | 34.577087 | 44.28 | 82.02 | 80-85% | Yes | 0.065 | 98.18 | 7.02122524 | 10.74 |
| 6067007001 | 3842 | Sacramento | 95833 | Sacramento | -121.4729191 | 38.6233797 | 44.27 | 82.00 | 80-85% | Yes | 0.048 | 60.88 | 9.53630303 | 40.92 |
| 6073011601 | 5891 | San Diego | 91950 | National City | -117.0964015 | 32.6663314 | 44.26 | 81.99 | 80-85% | Yes | 0.040 | 25.87 | 11.21 | 66.23 |
| 6071001808 | 4413 | San Bernardino | 91761 | Ontario | -117.6187363 | 34.025502 | 44.25 | 81.98 | 80-85% | Yes | 0.062 | 91.10 | 12.89 | 92.89 |
| 6115040100 | 4615 | Yuba | 95901 | Marysville | -121.5942461 | 39.1515257 | 44.25 | 81.96 | 80-85% | Yes | 0.048 | 60.88 | 8.69794377 | 30.70 |
| 6037235201 | 2781 | Los Angeles | 90043 | Los Angeles | -118.3221148 | 33.9745535 | 44.25 | 81.95 | 80-85% | Yes | 0.046 | 53.02 | 12.05 | 81.66 |
| 6047000504 | 6129 | Merced | 95388 | Winton | -120.611118 | 37.3941884 | 44.24 | 81.94 | 80-85% | Yes | 0.057 | 82.10 | 12.89 | 92.89 |
| 6037601802 | 4658 | Los Angeles | 90304 | Inglewood | -118.3504318 | 33.9400113 | 44.23 | 81.93 | 80-85% | Yes | 0.044 | 40.49 | 12.05 | 81.66 |
| 6037551700 | 6547 | Los Angeles | 90242 | Downey | -118.147433 | 33.9172388 | 44.20 | 81.91 | 80-85% | Yes | 0.044 | 40.49 | 12.05 | 81.66 |
| 6075061200 | 4089 | San Francisco | 94124 | San Francisco | -122.3901777 | 37.7370414 | 44.19 | 81.90 | 80-85% | Yes | 0.030 | 7.58 | 8.69794377 | 30.70 |
| 6037296901 | 4127 | Los Angeles | 90731 | San Pedro | -118.2945655 | 33.7301628 | 44.19 | 81.89 | 80-85% | Yes | 0.042 | 31.84 | 11.21 | 66.23 |
| 6037550800 | 7170 | Los Angeles | 90241 | Downey | -118.1433556 | 33.95127 | 44.19 | 81.88 | 80-85% | Yes | 0.046 | 53.02 | 12.05 | 81.66 |
| 6071002803 | 3982 | San Bernardino | 92335 | Fontana | -117.4469078 | 34.1029542 | 44.19 | 81.86 | 80-85% | Yes | 0.065 | 98.18 | 12.89 | 92.89 |
| 6037500500 | 2950 | Los Angeles | 90660 | Pico Rivera | -118.0838653 | 34.015045 | 44.18 | 81.85 | 80-85% | Yes | 0.046 | 53.02 | 12.05 | 81.66 |
| 6037115403 | 3188 | Los Angeles | 91325 | Northridge | -118.5317299 | 34.2247342 | 44.18 | 81.84 | 80-85% | Yes | 0.060 | 85.21 | 10.37 | 52.61 |
| 6099003400 | 1601 | Stanislaus | 95360 | Newman | -121.1933829 | 37.3259547 | 44.18 | 81.83 | 80-85% | Yes | 0.050 | 64.80 | 11.26 | 66.24 |
| 6029002813 | 4161 | Kern | 93309 | Bakersfield | -119.0506301 | 35.3431099 | 44.17 | 81.81 | 80-85% | Yes | 0.065 | 98.18 | 18.76 | 99.64 |
| 6037128220 | 3011 | Los Angeles | 91401 | Van Nuys | -118.4355767 | 34.1835533 | 44.17 | 81.80 | 80-85% | Yes | 0.055 | 77.87 | 11.21 | 66.23 |
| 6037139303 | 4186 | Los Angeles | 91356 | Tarzana | -118.5333073 | 34.1762844 | 44.17 | 81.79 | 80-85% | Yes | 0.060 | 85.21 | 10.37 | 52.61 |
| 6059011403 | 5565 | Orange | 92831 | Fullerton | -117.9057059 | 33.8715955 | 44.16 | 81.78 | 80-85% | Yes | 0.046 | 53.02 | 11.21 | 66.23 |
| 6031000300 | 7446 | Kings | 93245 | Lemoore | -119.9245603 | 36.3051812 | 44.16 | 81.76 | 80-85% | Yes | 0.062 | 91.10 | 16.66 | 97.90 |
| 6029002700 | 5370 | Kern | 93304 | Bakersfield | -119.03002 | 35.3461386 | 44.15 | 81.75 | 80-85% | Yes | 0.065 | 98.18 | 18.76 | 99.64 |
| 6037209810 | 2472 | Los Angeles | 90006 | Los Angeles | -118.2823449 | 34.0491173 | 44.13 | 81.74 | 80-85% | Yes | 0.046 | 53.02 | 12.89 | 92.89 |
| 6037572201 | 6197 | Los Angeles | 90806 | Long Beach | -118.1953378 | 33.81618 | 44.11 | 81.73 | 80-85% | Yes | 0.042 | 31.84 | 11.21 | 66.23 |
| 6077004403 | 4230 | San Joaquin | 95240 | Lodi | -121.2686833 | 38.1229626 | 44.11 | 81.71 | 80-85% | Yes | 0.048 | 60.88 | 11.33 | 66.27 |
| 6037209104 | 2434 | Los Angeles | 90017 | Los Angeles | -118.2663761 | 34.0591782 | 44.10 | 81.70 | 80-85% | Yes | 0.046 | 53.02 | 12.89 | 92.89 |
| 6081612000 | 7327 | San Mateo | 94303 | Palo Alto | -122.1465681 | 37.4680579 | 44.09 | 81.69 | 80-85% | Yes | 0.033 | 11.08 | 9.53630303 | 40.92 |
| 6099003002 | 6818 | Stanislaus | 95307 | Ceres | -120.949917 | 37.5641562 | 44.08 | 81.67 | 80-85% | Yes | 0.055 | 77.87 | 12.89 | 92.89 |
| 6025010300 | 933 | Imperial | 92227 | Brawley | -115.4711527 | 32.9827303 | 44.08 | 81.66 | 80-85% | Yes | 0.051 | 69.23 | 8.69794377 | 30.70 |
| 6065045706 | 4821 | Riverside | 92236 | Coachella | -116.165725 | 33.6774083 | 44.08 | 81.65 | 80-85% | Yes | 0.062 | 91.10 | 7.85958451 | 17.81 |
| 6059088101 | 2078 | Orange | 92841 | Garden Grove | -118.0049565 | 33.7886006 | 44.07 | 81.64 | 80-85% | Yes | 0.044 | 40.49 | 11.21 | 66.23 |
| 6099001300 | 5778 | Stanislaus | 95350 | Modesto | -121.0035722 | 37.6601004 | 44.07 | 81.62 | 80-85% | Yes | 0.053 | 73.93 | 12.89 | 92.89 |
| 6037208902 | 2339 | Los Angeles | 90017 | Los Angeles | -118.2723721 | 34.0564462 | 44.05 | 81.61 | 80-85% | Yes | 0.046 | 53.02 | 12.89 | 92.89 |
| 6037405203 | 3484 | Los Angeles | 91706 | Baldwin Park | -117.9569613 | 34.0762599 | 44.04 | 81.60 | 80-85% | Yes | 0.053 | 73.93 | 11.21 | 66.23 |
| 6037208401 | 3770 | Los Angeles | 90057 | Los Angeles | -118.2691298 | 34.0637659 | 44.01 | 81.59 | 80-85% | Yes | 0.046 | 53.02 | 12.89 | 92.89 |
| 6037131701 | 4541 | Los Angeles | 91335 | Reseda | -118.5578906 | 34.2046643 | 43.97 | 81.57 | 80-85% | Yes | 0.060 | 85.21 | 10.37 | 52.61 |
| 6037131010 | 6409 | Los Angeles | 91335 | Reseda | -118.5382539 | 34.214735 | 43.96 | 81.56 | 80-85% | Yes | 0.060 | 85.21 | 10.37 | 52.61 |
| 6001402500 | 1784 | Alameda | 94607 | Oakland | -122.2847803 | 37.8057305 | 43.96 | 81.55 | 80-85% | Yes | 0.030 | 7.58 | 8.69794377 | 30.70 |
| 6047002500 | 2328 | Merced | 95369 | Snelling | -120.4694335 | 37.499088 | 43.95 | 81.54 | 80-85% | Yes | 0.057 | 82.10 | 12.89 | 92.89 |
| 6037234800 | 3426 | Los Angeles | 90043 | Los Angeles | -118.3220826 | 33.9818234 | 43.95 | 81.52 | 80-85% | Yes | 0.046 | 53.02 | 12.05 | 81.66 |
| 6037221602 | 2816 | Los Angeles | 90007 | Los Angeles | -118.2921024 | 34.0384299 | 43.94 | 81.51 | 80-85% | Yes | 0.046 | 53.02 | 12.89 | 92.89 |
| 6107003700 | 5931 | Tulare | 93257 | Porterville | -119.0241104 | 36.0867011 | 43.94 | 81.50 | 80-85% | Yes | 0.065 | 98.18 | 14.57 | 95.13 |
| 6019007802 | 5269 | Fresno | 93234 | Huron | -120.0929305 | 36.3151701 | 43.94 | 81.49 | 80-85% | Yes | 0.060 | 85.21 | 13.8 | 94.70 |
| 6037106510 | 5108 | Los Angeles | 91342 | Sylmar | -118.4795847 | 34.326405 | 43.94 | 81.47 | 80-85% | Yes | 0.062 | 91.10 | 10.79 | 54.48 |
| 6067006201 | 6290 | Sacramento | 95821 | Sacramento | -121.4079426 | 38.6191125 | 43.92 | 81.46 | 80-85% | Yes | 0.051 | 69.23 | 9.53630303 | 40.92 |
| 6037124203 | 2748 | Los Angeles | 91601 | North Hollywood | -118.374665 | 34.1776041 | 43.91 | 81.45 | 80-85% | Yes | 0.053 | 73.93 | 12.05 | 81.66 |
| 6013368001 | 5327 | Contra Costa | 94806 | San Pablo | -122.3524853 | 37.9542763 | 43.89 | 81.44 | 80-85% | Yes | 0.030 | 7.58 | 7.85958451 | 17.81 |
| 6077005305 | 6495 | San Joaquin | 95376 | Tracy | -121.4382804 | 37.758114 | 43.89 | 81.42 | 80-85% | Yes | 0.053 | 73.93 | 10.37 | 52.61 |
| 6037104108 | 5256 | Los Angeles | 91331 | Pacoima | -118.3985703 | 34.2731497 | 43.88 | 81.41 | 80-85% | Yes | 0.055 | 77.87 | 11.21 | 66.23 |
| 6037530901 | 4080 | Los Angeles | 90063 | Los Angeles | -118.1886037 | 34.0432749 | 43.88 | 81.40 | 80-85% | Yes | 0.046 | 53.02 | 12.89 | 92.89 |
| 6037127805 | 3768 | Los Angeles | 91405 | Van Nuys | -118.4576889 | 34.1921963 | 43.88 | 81.38 | 80-85% | Yes | 0.055 | 77.87 | 11.21 | 66.23 |
| 6029000507 | 3598 | Kern | 93308 | Bakersfield | -119.0634239 | 35.386741 | 43.88 | 81.37 | 80-85% | Yes | 0.062 | 91.10 | 18.76 | 99.64 |
| 6037190201 | 2870 | Los Angeles | 90028 | Los Angeles | -118.329714 | 34.1033578 | 43.87 | 81.36 | 80-85% | Yes | 0.050 | 64.80 | 12.05 | 81.66 |
| 6065042519 | 1706 | Riverside | 92553 | Moreno Valley | -117.2274689 | 33.9373528 | 43.85 | 81.35 | 80-85% | Yes | 0.065 | 98.18 | 12.89 | 92.89 |
| 6067006202 | 3599 | Sacramento | 95815 | Sacramento | -121.422268 | 38.6164065 | 43.84 | 81.33 | 80-85% | Yes | 0.050 | 64.80 | 9.53630303 | 40.92 |
| 6059087805 | 6952 | Orange | 92804 | Anaheim | -117.9801308 | 33.8102721 | 43.83 | 81.32 | 80-85% | Yes | 0.046 | 53.02 | 11.21 | 66.23 |
| 6037553100 | 6298 | Los Angeles | 90706 | Bellflower | -118.1115699 | 33.8905614 | 43.81 | 81.31 | 80-85% | Yes | 0.044 | 40.49 | 11.63 | 69.14 |
| 6059074004 | 7444 | Orange | 92707 | Santa Ana | -117.8725713 | 33.7015157 | 43.80 | 81.30 | 80-85% | Yes | 0.046 | 53.02 | 10.37 | 52.61 |
| 6037185202 | 3712 | Los Angeles | 90065 | Los Angeles | -118.2170631 | 34.0950598 | 43.79 | 81.28 | 80-85% | Yes | 0.046 | 53.02 | 12.89 | 92.89 |
| 6071009800 | 5017 | San Bernardino | 92395 | Victorville | -117.3009281 | 34.535916 | 43.79 | 81.27 | 80-85% | Yes | 0.065 | 98.18 | 7.02122524 | 10.74 |
| 6037531800 | 5066 | Los Angeles | 90022 | Los Angeles | -118.1391833 | 34.0186986 | 43.79 | 81.26 | 80-85% | Yes | 0.046 | 53.02 | 12.05 | 81.66 |
| 6037301801 | 4079 | Los Angeles | 91203 | Glendale | -118.2596966 | 34.1556466 | 43.77 | 81.25 | 80-85% | Yes | 0.051 | 69.23 | 12.05 | 81.66 |
| 6071002105 | 5036 | San Bernardino | 91730 | Rancho Cucamonga | -117.6046422 | 34.0979077 | 43.76 | 81.23 | 80-85% | Yes | 0.065 | 98.18 | 12.89 | 92.89 |
| 6107001602 | 5745 | Tulare | 93292 | Visalia | -119.2194823 | 36.2781982 | 43.76 | 81.22 | 80-85% | Yes | 0.060 | 85.21 | 16.24 | 97.73 |
| 6065040301 | 7857 | Riverside | 92509 | Riverside | -117.4234617 | 34.0003286 | 43.76 | 81.21 | 80-85% | Yes | 0.065 | 98.18 | 13.31 | 93.64 |
| 6047001503 | 4438 | Merced | 95341 | Merced | -120.4990995 | 37.2927274 | 43.76 | 81.20 | 80-85% | Yes | 0.057 | 82.10 | 12.89 | 92.89 |
| 6037555211 | 5818 | Los Angeles | 90716 | Hawaiian Gardens | -118.0768628 | 33.8276575 | 43.76 | 81.18 | 80-85% | Yes | 0.044 | 40.49 | 11.21 | 66.23 |
| 6001410500 | 2193 | Alameda | 94607 | Oakland | -122.288956 | 37.8100197 | 43.75 | 81.17 | 80-85% | Yes | 0.030 | 7.58 | 8.69794377 | 30.70 |
| 6001432501 | 4839 | Alameda | 94577 | San Leandro | -122.1661575 | 37.7167153 | 43.73 | 81.16 | 80-85% | Yes | 0.030 | 7.58 | 8.69794377 | 30.70 |
| 6111003201 | 4577 | Ventura | 93030 | Oxnard | -119.1729084 | 34.2034678 | 43.71 | 81.15 | 80-85% | Yes | 0.044 | 40.49 | 9.53630303 | 40.92 |
| 6037117405 | 3442 | Los Angeles | 91343 | North Hills | -118.4702311 | 34.2337312 | 43.70 | 81.13 | 80-85% | Yes | 0.057 | 82.10 | 11.21 | 66.23 |
| 6113010204 | 4922 | Yolo | 95691 | West Sacramento | -121.5324616 | 38.5777831 | 43.69 | 81.12 | 80-85% | Yes | 0.046 | 53.02 | 9.53630303 | 40.92 |
| 6037106604 | 5020 | Los Angeles | 91342 | Sylmar | -118.4745764 | 34.3033292 | 43.68 | 81.11 | 80-85% | Yes | 0.060 | 85.21 | 10.79 | 54.48 |
| 6107004500 | 6628 | Tulare | 93207 | California Hot Springs | -118.9866017 | 35.8807557 | 43.66 | 81.09 | 80-85% | Yes | 0.065 | 98.18 | 15.02 | 95.28 |
| 6037533104 | 4356 | Los Angeles | 90255 | Huntington Park | -118.224409 | 33.9766899 | 43.65 | 81.08 | 80-85% | Yes | 0.046 | 53.02 | 12.05 | 81.66 |
| 6037134520 | 5453 | Los Angeles | 91303 | Canoga Park | -118.59964 | 34.198294 | 43.63 | 81.07 | 80-85% | Yes | 0.057 | 82.10 | 10.37 | 52.61 |
| 6037600302 | 3317 | Los Angeles | 90047 | Los Angeles | -118.3046455 | 33.935475 | 43.61 | 81.06 | 80-85% | Yes | 0.044 | 40.49 | 12.05 | 81.66 |
| 6071006604 | 4278 | San Bernardino | 92324 | Colton | -117.3337749 | 34.0900259 | 43.60 | 81.04 | 80-85% | Yes | 0.065 | 98.18 | 12.47 | 83.99 |
| 6029003114 | 7654 | Kern | 93313 | Bakersfield | -119.0445781 | 35.3029184 | 43.60 | 81.03 | 80-85% | Yes | 0.065 | 98.18 | 19.18 | 99.86 |
| 6037531202 | 4747 | Los Angeles | 90023 | Los Angeles | -118.1859277 | 34.0257388 | 43.60 | 81.02 | 80-85% | Yes | 0.046 | 53.02 | 12.89 | 92.89 |
| 6037554101 | 3799 | Los Angeles | 90706 | Bellflower | -118.1236012 | 33.8928105 | 43.60 | 81.01 | 80-85% | Yes | 0.044 | 40.49 | 12.05 | 81.66 |
| 6071001704 | 5056 | San Bernardino | 91762 | Ontario | -117.6600725 | 34.0357869 | 43.59 | 80.99 | 80-85% | Yes | 0.062 | 91.10 | 12.89 | 92.89 |
| 6037540101 | 6483 | Los Angeles | 90262 | Lynwood | -118.1901733 | 33.931052 | 43.57 | 80.98 | 80-85% | Yes | 0.044 | 40.49 | 12.05 | 81.66 |
| 6037293202 | 6742 | Los Angeles | 90501 | Torrance | -118.3037589 | 33.820409 | 43.57 | 80.97 | 80-85% | Yes | 0.042 | 31.84 | 11.63 | 69.14 |
| 6099003908 | 2226 | Stanislaus | 95380 | Turlock | -120.8543056 | 37.5064389 | 43.56 | 80.96 | 80-85% | Yes | 0.057 | 82.10 | 12.89 | 92.89 |
| 6053000900 | 5746 | Monterey | 93905 | Salinas | -121.6261158 | 36.6690787 | 43.56 | 80.94 | 80-85% | Yes | 0.033 | 11.08 | 5.34450672 | 3.92 |
| 6065043405 | 4217 | Riverside | 92543 | Hemet | -116.9865118 | 33.7502798 | 43.56 | 80.93 | 80-85% | Yes | 0.062 | 91.10 | 8.69794377 | 30.70 |
| 6085501102 | 4477 | Santa Clara | 95112 | San Jose | -121.8812071 | 37.3540562 | 43.54 | 80.92 | 80-85% | Yes | 0.035 | 16.94 | 10.37 | 52.61 |
| 6037208610 | 4195 | Los Angeles | 90026 | Los Angeles | -118.2817725 | 34.072159 | 43.54 | 80.91 | 80-85% | Yes | 0.046 | 53.02 | 12.89 | 92.89 |
| 6081602300 | 3753 | San Mateo | 94080 | South San Francisco | -122.3963686 | 37.6504433 | 43.53 | 80.89 | 80-85% | Yes | 0.030 | 7.58 | 8.69794377 | 30.70 |
| 6071000208 | 4124 | San Bernardino | 91763 | Montclair | -117.6895559 | 34.0704075 | 43.53 | 80.88 | 80-85% | Yes | 0.060 | 85.21 | 12.89 | 92.89 |
| 6047000901 | 3970 | Merced | 95341 | Merced | -120.5705923 | 37.2016004 | 43.51 | 80.87 | 80-85% | Yes | 0.057 | 82.10 | 12.89 | 92.89 |
| 6037530203 | 3238 | Los Angeles | 90640 | Montebello | -118.1264604 | 34.0266482 | 43.48 | 80.86 | 80-85% | Yes | 0.046 | 53.02 | 12.05 | 81.66 |
| 6013358000 | 5298 | Contra Costa | 94572 | Rodeo | -122.2538488 | 38.0481856 | 43.46 | 80.84 | 80-85% | Yes | 0.033 | 11.08 | 7.85958451 | 17.81 |
| 6037191901 | 3355 | Los Angeles | 90038 | Los Angeles | -118.3383611 | 34.0906829 | 43.44 | 80.83 | 80-85% | Yes | 0.050 | 64.80 | 12.05 | 81.66 |
| 6047000203 | 9272 | Merced | 95315 | Delhi | -120.7838842 | 37.4290665 | 43.44 | 80.82 | 80-85% | Yes | 0.057 | 82.10 | 12.89 | 92.89 |
| 6037554405 | 3040 | Los Angeles | 90706 | Bellflower | -118.1212147 | 33.8737602 | 43.44 | 80.80 | 80-85% | Yes | 0.044 | 40.49 | 11.63 | 69.14 |
| 6029001102 | 6682 | Kern | 93306 | Bakersfield | -118.9402404 | 35.3702538 | 43.42 | 80.79 | 80-85% | Yes | 0.062 | 91.10 | 19.6 | 100.00 |
| 6037197600 | 2376 | Los Angeles | 90026 | Los Angeles | -118.2519864 | 34.0683315 | 43.42 | 80.78 | 80-85% | Yes | 0.046 | 53.02 | 12.89 | 92.89 |
| 6037533106 | 1743 | Los Angeles | 90255 | Huntington Park | -118.2170425 | 33.9788203 | 43.42 | 80.77 | 80-85% | Yes | 0.046 | 53.02 | 12.05 | 81.66 |
| 6037119002 | 7210 | Los Angeles | 91331 | Pacoima | -118.4275349 | 34.2469249 | 43.41 | 80.75 | 80-85% | Yes | 0.055 | 77.87 | 11.21 | 66.23 |
| 6059011502 | 4101 | Orange | 92831 | Fullerton | -117.8891258 | 33.8707135 | 43.40 | 80.74 | 80-85% | Yes | 0.046 | 53.02 | 11.21 | 66.23 |
| 6037555102 | 6526 | Los Angeles | 90715 | Lakewood | -118.0769658 | 33.8387305 | 43.40 | 80.73 | 80-85% | Yes | 0.044 | 40.49 | 11.21 | 66.23 |
| 6071002804 | 5417 | San Bernardino | 92335 | Fontana | -117.446889 | 34.0957108 | 43.40 | 80.72 | 80-85% | Yes | 0.065 | 98.18 | 12.89 | 92.89 |
| 6059110603 | 8540 | Orange | 90621 | Buena Park | -117.993735 | 33.8687069 | 43.39 | 80.70 | 80-85% | Yes | 0.046 | 53.02 | 11.21 | 66.23 |
| 6071001806 | 4760 | San Bernardino | 91761 | Ontario | -117.6305659 | 34.0249243 | 43.39 | 80.69 | 80-85% | Yes | 0.062 | 91.10 | 12.89 | 92.89 |
| 6071012002 | 5366 | San Bernardino | 92311 | Barstow | -116.9695855 | 34.8748849 | 43.38 | 80.68 | 80-85% | Yes | 0.060 | 85.21 | 6.99383387 | 8.98 |
| 6013381000 | 6097 | Contra Costa | 94804 | Richmond | -122.3351024 | 37.9302081 | 43.38 | 80.67 | 80-85% | Yes | 0.030 | 7.58 | 8.69794377 | 30.70 |
| 6037603500 | 3074 | Los Angeles | 90249 | Gardena | -118.3208781 | 33.8993747 | 43.37 | 80.65 | 80-85% | Yes | 0.044 | 40.49 | 12.05 | 81.66 |
| 6037534403 | 2948 | Los Angeles | 90201 | Bell | -118.1971314 | 33.9681673 | 43.37 | 80.64 | 80-85% | Yes | 0.046 | 53.02 | 12.05 | 81.66 |
| 6077003409 | 4450 | San Joaquin | 95210 | Stockton | -121.285182 | 38.0025906 | 43.36 | 80.63 | 80-85% | Yes | 0.048 | 60.88 | 13.53 | 94.09 |
| 6037576001 | 4969 | Los Angeles | 90802 | Long Beach | -118.1938633 | 33.7631159 | 43.36 | 80.62 | 80-85% | Yes | 0.042 | 31.84 | 11.21 | 66.23 |
| 6007003700 | 4505 | Butte | 95965 | Oroville | -121.6460664 | 39.5164559 | 43.36 | 80.60 | 80-85% | Yes | 0.051 | 69.23 | 9.1171234 | 32.61 |
| 6067009316 | 4605 | Sacramento | 95828 | Sacramento | -121.3810288 | 38.4780935 | 43.36 | 80.59 | 80-85% | Yes | 0.050 | 64.80 | 9.53630303 | 40.92 |
| 6073003403 | 4283 | San Diego | 92102 | San Diego | -117.1085408 | 32.7136131 | 43.34 | 80.58 | 80-85% | Yes | 0.040 | 25.87 | 11.21 | 66.23 |
| 6107003902 | 5847 | Tulare | 93257 | Porterville | -118.9780019 | 36.0952673 | 43.32 | 80.57 | 80-85% | Yes | 0.065 | 98.18 | 12.89 | 92.89 |
| 6059086501 | 4848 | Orange | 92805 | Anaheim | -117.9187306 | 33.846685 | 43.32 | 80.55 | 80-85% | Yes | 0.046 | 53.02 | 11.21 | 66.23 |

| | | | | | | | | | | | | |
|---|---|---|---|---|---|---|---|---|---|---|---|---|
| 6037128102 | 4795 | Los Angeles | 91401 | Van Nuys | -118.4443506 | 34.1902959 | 43.31 | 80.54 | 80-85% | Yes | 0.055 | 77.87 |
| 6071000901 | 4600 | San Bernardino | 91786 | Upland | -117.6396399 | 34.103005 | 43.31 | 80.53 | 80-85% | Yes | 0.062 | 91.10 |
| 6037294520 | 3564 | Los Angeles | 90744 | Wilmington | -118.2658196 | 33.7868323 | 43.31 | 80.51 | 80-85% | Yes | 0.042 | 31.84 |
| 6059063605 | 5672 | Orange | 92627 | Costa Mesa | -117.9273058 | 33.6376789 | 43.30 | 80.50 | 80-85% | Yes | 0.044 | 40.49 |
| 6099001200 | 3623 | Stanislaus | 95354 | Modesto | -120.9941028 | 37.64972 | 43.28 | 80.49 | 80-85% | Yes | 0.053 | 73.93 |
| 6037543502 | 4560 | Los Angeles | 90502 | Torrance | -118.2931768 | 33.8404078 | 43.27 | 80.48 | 80-85% | Yes | 0.042 | 31.84 |
| 6037132700 | 4912 | Los Angeles | 91335 | Reseda | -118.5257626 | 34.1888959 | 43.24 | 80.46 | 80-85% | Yes | 0.060 | 85.21 |
| 6001438203 | 3920 | Alameda | 94544 | Hayward | -122.0573943 | 37.6155886 | 43.22 | 80.45 | 80-85% | Yes | 0.035 | 16.94 |
| 6037191203 | 2922 | Los Angeles | 90029 | Los Angeles | -118.2939076 | 34.0931674 | 43.21 | 80.44 | 80-85% | Yes | 0.048 | 60.88 |
| 6019006300 | 7254 | Fresno | 93654 | Reedley | -119.4358266 | 36.663503 | 43.21 | 80.43 | 80-85% | Yes | 0.065 | 98.18 |
| 6037461600 | 5826 | Los Angeles | 91103 | Pasadena | -118.1559426 | 34.1634652 | 43.20 | 80.41 | 80-85% | Yes | 0.051 | 69.23 |
| 6037573402 | 6430 | Los Angeles | 90755 | Signal Hill | -118.1691428 | 33.8016982 | 43.19 | 80.40 | 80-85% | Yes | 0.042 | 31.84 |
| 6071002107 | 4970 | San Bernardino | 91730 | Rancho Cucamonga | -117.5866987 | 34.1006231 | 43.19 | 80.39 | 80-85% | Yes | 0.065 | 98.18 |
| 6037117303 | 3512 | Los Angeles | 91343 | North Hills | -118.4912814 | 34.2281097 | 43.19 | 80.38 | 80-85% | Yes | 0.057 | 82.10 |
| 6065042404 | 2038 | Riverside | 92557 | Moreno Valley | -117.2347522 | 33.943773 | 43.18 | 80.36 | 80-85% | Yes | 0.065 | 98.18 |
| 6019007202 | 5109 | Fresno | 93631 | Kingsburg | -119.5666704 | 36.5082178 | 43.18 | 80.35 | 80-85% | Yes | 0.065 | 98.18 |
| 6029001000 | 9186 | Kern | 93307 | Bakersfield | -118.87757 | 35.3587886 | 43.17 | 80.34 | 80-85% | Yes | 0.062 | 91.10 |
| 6065031701 | 2943 | Riverside | 92504 | Riverside | -117.4050093 | 33.9061238 | 43.17 | 80.33 | 80-85% | Yes | 0.062 | 91.10 |
| 6059086406 | 4330 | Orange | 92806 | Anaheim | -117.876231 | 33.8438173 | 43.16 | 80.31 | 80-85% | Yes | 0.046 | 53.02 |
| 6029001700 | 4287 | Kern | 93301 | Bakersfield | -119.033399 | 35.3786716 | 43.16 | 80.30 | 80-85% | Yes | 0.065 | 98.18 |
| 6037601212 | 6511 | Los Angeles | 90301 | Inglewood | -118.3570019 | 33.9558199 | 43.15 | 80.29 | 80-85% | Yes | 0.046 | 53.02 |
| 6067009008 | 4928 | Sacramento | 95670 | Rancho Cordova | -121.2985514 | 38.5874254 | 43.14 | 80.27 | 80-85% | Yes | 0.051 | 69.23 |
| 6037554404 | 4447 | Los Angeles | 90706 | Bellflower | -118.1295305 | 33.873719 | 43.13 | 80.26 | 80-85% | Yes | 0.044 | 40.49 |
| 6065043006 | 4703 | Riverside | 92530 | Lake Elsinore | -117.3445199 | 33.6824833 | 43.11 | 80.25 | 80-85% | Yes | 0.057 | 82.10 |
| 6019002906 | 5520 | Fresno | 93727 | Fresno | -119.7272787 | 36.7613333 | 43.05 | 80.24 | 80-85% | Yes | 0.065 | 98.18 |
| 6029001500 | 3147 | Kern | 93305 | Bakersfield | -118.9890643 | 35.3722473 | 43.04 | 80.22 | 80-85% | Yes | 0.065 | 98.18 |
| 6081610201 | 5764 | San Mateo | 94063 | Redwood City | -122.2138224 | 37.484753 | 42.97 | 80.21 | 80-85% | Yes | 0.033 | 11.08 |
| 6059087404 | 3591 | Orange | 92805 | Anaheim | -117.9095108 | 33.8251532 | 42.95 | 80.20 | 80-85% | Yes | 0.046 | 53.02 |
| 6037302506 | 3534 | Los Angeles | 91205 | Glendale | -118.2463128 | 34.1277465 | 42.95 | 80.19 | 80-85% | Yes | 0.050 | 64.80 |
| 6059001801 | 5544 | Orange | 92833 | Fullerton | -117.979612 | 33.8672719 | 42.93 | 80.17 | 80-85% | Yes | 0.046 | 53.02 |
| 6037191204 | 2124 | Los Angeles | 90029 | Los Angeles | -118.2982812 | 34.0930661 | 42.93 | 80.16 | 80-85% | Yes | 0.048 | 60.88 |
| 6037408302 | 4036 | Los Angeles | 91746 | La Puente | -118.0172042 | 34.0382308 | 42.93 | 80.15 | 80-85% | Yes | 0.048 | 60.88 |
| 6037222200 | 3965 | Los Angeles | 90018 | Los Angeles | -118.3024156 | 34.0309167 | 42.92 | 80.14 | 80-85% | Yes | 0.046 | 53.02 |
| 6037221900 | 3664 | Los Angeles | 90007 | Los Angeles | -118.2895621 | 34.0267694 | 42.92 | 80.12 | 80-85% | Yes | 0.046 | 53.02 |
| 6059089106 | 3973 | Orange | 92843 | Garden Grove | -117.9150746 | 33.771306 | 42.92 | 80.11 | 80-85% | Yes | 0.046 | 53.02 |
| 6071003804 | 4578 | San Bernardino | 92376 | Rialto | -117.3520799 | 34.1242645 | 42.89 | 80.10 | 80-85% | Yes | 0.065 | 98.18 |
| 6037186301 | 2999 | Los Angeles | 90065 | Los Angeles | -118.2404336 | 34.1223506 | 42.89 | 80.09 | 80-85% | Yes | 0.050 | 64.80 |
| 6037192520 | 5067 | Los Angeles | 90004 | Los Angeles | -118.3024972 | 34.0799255 | 42.89 | 80.07 | 80-85% | Yes | 0.048 | 60.88 |
| 6037192510 | 3670 | Los Angeles | 90004 | Los Angeles | -118.3068568 | 34.079869 | 42.89 | 80.06 | 80-85% | Yes | 0.048 | 60.88 |
| 6029006304 | 3895 | Kern | 93203 | Arvin | -118.8196449 | 35.201848 | 42.89 | 80.05 | 80-85% | Yes | 0.065 | 98.18 |
| 6059074200 | 9450 | Orange | 92707 | Santa Ana | -117.8700847 | 33.7216725 | 42.88 | 80.04 | 80-85% | Yes | 0.046 | 53.02 |
| 6085503602 | 4741 | Santa Clara | 95116 | San Jose | -121.8522546 | 37.3445854 | 42.87 | 80.02 | 80-85% | Yes | 0.038 | 22.34 |
| 6037552900 | 6881 | Los Angeles | 90650 | Norwalk | -118.0911533 | 33.8912102 | 42.86 | 80.01 | 80-85% | Yes | 0.044 | 40.49 |
| 6065031002 | 4559 | Riverside | 92504 | Riverside | -117.4237908 | 33.9518517 | 42.86 | 80.00 | 75-80% | Yes | 0.065 | 98.18 |
| 6085501401 | 3295 | Santa Clara | 95116 | San Jose | -121.8697204 | 37.3515633 | 42.85 | 79.98 | 75-80% | Yes | 0.035 | 16.94 |
| 6077005130 | 3186 | San Joaquin | 95330 | Lathrop | -121.2797491 | 37.8194204 | 42.85 | 79.97 | 75-80% | Yes | 0.050 | 64.80 |
| 6029003400 | 4318 | Kern | 93268 | Taft | -119.4672721 | 35.1650721 | 42.85 | 79.96 | 75-80% | Yes | 0.060 | 85.21 |
| 6075017801 | 3499 | San Francisco | 94107 | San Francisco | -122.4011589 | 37.7820284 | 42.84 | 79.95 | 75-80% | Yes | 0.030 | 7.58 |
| 6029003206 | 12112 | Kern | 93313 | Bakersfield | -119.0713629 | 35.2667571 | 42.83 | 79.93 | 75-80% | Yes | 0.065 | 98.18 |
| 6077003601 | 3453 | San Joaquin | 95215 | Stockton | -121.2262076 | 37.9949416 | 42.82 | 79.92 | 75-80% | Yes | 0.048 | 60.88 |
| 6037404902 | 3973 | Los Angeles | 91706 | Baldwin Park | -117.9791262 | 34.0869771 | 42.80 | 79.91 | 75-80% | Yes | 0.051 | 69.23 |
| 6029002815 | 4282 | Kern | 93309 | Bakersfield | -119.0481028 | 35.3286336 | 42.79 | 79.90 | 75-80% | Yes | 0.065 | 98.18 |
| 6065042706 | 8393 | Riverside | 92571 | Perris | -117.2070433 | 33.7943832 | 42.77 | 79.88 | 75-80% | Yes | 0.065 | 98.18 |
| 6001402400 | 2351 | Alameda | 94607 | Oakland | -122.2824569 | 37.812031 | 42.77 | 79.87 | 75-80% | Yes | 0.030 | 7.58 |
| 6085512310 | 3791 | Santa Clara | 95037 | Morgan Hill | -121.6336267 | 37.1171152 | 42.75 | 79.86 | 75-80% | Yes | 0.040 | 25.87 |
| 6037601303 | 4879 | Los Angeles | 90302 | Inglewood | -118.3617818 | 33.9741892 | 42.74 | 79.85 | 75-80% | Yes | 0.046 | 53.02 |
| 6019005804 | 6626 | Fresno | 93611 | Clovis | -119.6909521 | 36.7865743 | 42.73 | 79.83 | 75-80% | Yes | 0.065 | 98.18 |
| 6071002602 | 7639 | San Bernardino | 92337 | Fontana | -117.4982025 | 34.0426943 | 42.71 | 79.82 | 75-80% | Yes | 0.065 | 98.18 |
| 6037554001 | 4171 | Los Angeles | 90706 | Bellflower | -118.1322329 | 33.8990638 | 42.70 | 79.81 | 75-80% | Yes | 0.044 | 40.49 |
| 6111004704 | 1469 | Ventura | 93033 | Oxnard | -119.1186906 | 34.1712698 | 42.68 | 79.80 | 75-80% | Yes | 0.044 | 40.49 |
| 6037134720 | 4594 | Los Angeles | 91306 | Winnetka | -118.5688121 | 34.2046449 | 42.68 | 79.78 | 75-80% | Yes | 0.057 | 82.10 |
| 6067006300 | 4592 | Sacramento | 95815 | Sacramento | -121.4292379 | 38.6225203 | 42.68 | 79.77 | 75-80% | Yes | 0.050 | 64.80 |
| 6099002006 | 4458 | Stanislaus | 95357 | Modesto | -120.9254717 | 37.6449218 | 42.67 | 79.76 | 75-80% | Yes | 0.053 | 73.93 |
| 6037602506 | 4329 | Los Angeles | 90250 | Hawthorne | -118.3308401 | 33.9073761 | 42.65 | 79.75 | 75-80% | Yes | 0.044 | 40.49 |
| 6113010101 | 6645 | Yolo | 95605 | West Sacramento | -121.5170147 | 38.5922085 | 42.65 | 79.73 | 75-80% | Yes | 0.046 | 53.02 |
| 6037297201 | 3475 | Los Angeles | 90731 | San Pedro | -118.2914165 | 33.7249036 | 42.65 | 79.72 | 75-80% | Yes | 0.042 | 31.84 |
| 6037212203 | 2679 | Los Angeles | 90005 | Los Angeles | -118.2903562 | 34.0597622 | 42.64 | 79.71 | 75-80% | Yes | 0.048 | 60.88 |
| 6073011801 | 3961 | San Diego | 91950 | National City | -117.1041616 | 32.6804224 | 42.63 | 79.69 | 75-80% | Yes | 0.038 | 22.34 |
| 6037221220 | 3378 | Los Angeles | 90006 | Los Angeles | -118.2960214 | 34.0435737 | 42.62 | 79.68 | 75-80% | Yes | 0.046 | 53.02 |
| 6071003101 | 5040 | San Bernardino | 92335 | Fontana | -117.4490622 | 34.0848049 | 42.62 | 79.67 | 75-80% | Yes | 0.065 | 98.18 |
| 6037120108 | 4838 | Los Angeles | 91402 | Panorama City | -118.4563783 | 34.2300529 | 42.62 | 79.66 | 75-80% | Yes | 0.057 | 82.10 |
| 6071007407 | 2940 | San Bernardino | 92404 | San Bernardino | -117.2349561 | 34.1322121 | 42.58 | 79.64 | 75-80% | Yes | 0.068 | 100.00 |
| 6019003301 | 3507 | Fresno | 93703 | Fresno | -119.763479 | 36.7759433 | 42.58 | 79.63 | 75-80% | Yes | 0.065 | 98.18 |
| 6037120103 | 3287 | Los Angeles | 91402 | Panorama City | -118.4517984 | 34.2297196 | 42.58 | 79.62 | 75-80% | Yes | 0.057 | 82.10 |
| 6031000200 | 2271 | Kings | 93245 | Lemoore | -119.8425961 | 36.3510181 | 42.55 | 79.61 | 75-80% | Yes | 0.062 | 91.10 |
| 6019006202 | 6807 | Fresno | 93657 | Sanger | -119.5325383 | 36.718129 | 42.55 | 79.59 | 75-80% | Yes | 0.065 | 98.18 |
| 6071008001 | 6513 | San Bernardino | 92374 | Redlands | -117.1893601 | 34.0811964 | 42.55 | 79.58 | 75-80% | Yes | 0.068 | 100.00 |
| 6059075002 | 8605 | Orange | 92701 | Santa Ana | -117.8685376 | 33.748073 | 42.54 | 79.57 | 75-80% | Yes | 0.046 | 53.02 |
| 6037208620 | 4660 | Los Angeles | 90057 | Los Angeles | -118.2779829 | 34.069709 | 42.53 | 79.56 | 75-80% | Yes | 0.046 | 53.02 |
| 6077005133 | 4249 | San Joaquin | 95337 | Manteca | -121.2235218 | 37.7885222 | 42.52 | 79.54 | 75-80% | Yes | 0.051 | 69.23 |
| 6019005410 | 3298 | Fresno | 93710 | Fresno | -119.7767969 | 36.8157748 | 42.51 | 79.53 | 75-80% | Yes | 0.065 | 98.18 |
| 6071000603 | 5576 | San Bernardino | 91710 | Chino | -117.6829758 | 34.0299818 | 42.50 | 79.52 | 75-80% | Yes | 0.060 | 85.21 |
| 6059074108 | 5226 | Orange | 92704 | Santa Ana | -117.9109245 | 33.7211578 | 42.48 | 79.51 | 75-80% | Yes | 0.046 | 53.02 |
| 6037576403 | 5033 | Los Angeles | 90813 | Long Beach | -118.1698152 | 33.7789729 | 42.47 | 79.49 | 75-80% | Yes | 0.042 | 31.84 |
| 6037407900 | 6296 | Los Angeles | 91744 | La Puente | -117.9273307 | 34.0421045 | 42.46 | 79.48 | 75-80% | Yes | 0.051 | 69.23 |
| 6037124105 | 2658 | Los Angeles | 91606 | North Hollywood | -118.3834061 | 34.1812289 | 42.45 | 79.47 | 75-80% | Yes | 0.055 | 77.87 |
| 6037503104 | 2719 | Los Angeles | 90605 | Whittier | -118.0432662 | 33.9202427 | 42.43 | 79.46 | 75-80% | Yes | 0.046 | 53.02 |
| 6037117404 | 4279 | Los Angeles | 91343 | North Hills | -118.479077 | 34.2284788 | 42.40 | 79.44 | 75-80% | Yes | 0.057 | 82.10 |
| 6019005203 | 4519 | Fresno | 93726 | Fresno | -119.7634015 | 36.7832086 | 42.40 | 79.43 | 75-80% | Yes | 0.065 | 98.18 |
| 6037551401 | 4290 | Los Angeles | 90241 | Downey | -118.156034 | 33.9440174 | 42.38 | 79.42 | 75-80% | Yes | 0.044 | 40.49 |
| 6029001201 | 2895 | Kern | 93305 | Bakersfield | -118.9720353 | 35.3874473 | 42.37 | 79.40 | 75-80% | Yes | 0.062 | 91.10 |
| 6077005135 | 5139 | San Joaquin | 95336 | Manteca | -121.2384835 | 37.8443852 | 42.37 | 79.39 | 75-80% | Yes | 0.048 | 60.88 |
| 6037134904 | 4338 | Los Angeles | 91306 | Winnetka | -118.5802111 | 34.1913886 | 42.35 | 79.38 | 75-80% | Yes | 0.057 | 82.10 |
| 6013314103 | 5546 | Contra Costa | 94565 | Pittsburg | -121.9435261 | 38.0391707 | 42.34 | 79.37 | 75-80% | Yes | 0.038 | 22.34 |
| 6037602504 | 4407 | Los Angeles | 90250 | Hawthorne | -118.3373323 | 33.9055479 | 42.33 | 79.35 | 75-80% | Yes | 0.044 | 40.49 |
| 6047000801 | 4444 | Merced | 95301 | Atwater | -120.579253 | 37.3545046 | 42.33 | 79.34 | 75-80% | Yes | 0.057 | 82.10 |
| 6099000601 | 4647 | Stanislaus | 95358 | Modesto | -121.054918 | 37.6628873 | 42.32 | 79.33 | 75-80% | Yes | 0.053 | 73.93 |
| 6115040302 | 2143 | Yuba | 95901 | Marysville | -121.5709108 | 39.1277084 | 42.32 | 79.32 | 75-80% | Yes | 0.048 | 60.88 |
| 6037603004 | 1512 | Los Angeles | 90247 | Gardena | -118.2965026 | 33.8933016 | 42.32 | 79.30 | 75-80% | Yes | 0.044 | 40.49 |
| 6073012501 | 3858 | San Diego | 91910 | Chula Vista | -117.0936978 | 32.6335939 | 42.30 | 79.29 | 75-80% | Yes | 0.040 | 25.87 |
| 6037209403 | 3600 | Los Angeles | 90017 | Los Angeles | -118.2738446 | 34.0531328 | 42.30 | 79.28 | 75-80% | Yes | 0.046 | 53.02 |
| 6037127520 | 4045 | Los Angeles | 91406 | Van Nuys | -118.4697511 | 34.2184163 | 42.30 | 79.27 | 75-80% | Yes | 0.057 | 82.10 |
| 6071000824 | 5092 | San Bernardino | 91786 | Upland | -117.6583212 | 34.1024278 | 42.29 | 79.25 | 75-80% | Yes | 0.062 | 91.10 |
| 6067006101 | 4608 | Sacramento | 95821 | Sacramento | -121.3914626 | 38.6259083 | 42.29 | 79.24 | 75-80% | Yes | 0.051 | 69.23 |
| 6037535503 | 2497 | Los Angeles | 90280 | South Gate | -118.2144693 | 33.9552551 | 42.28 | 79.23 | 75-80% | Yes | 0.044 | 40.49 |
| 6037221120 | 3373 | Los Angeles | 90006 | Los Angeles | -118.2878972 | 34.0421001 | 42.28 | 79.22 | 75-80% | Yes | 0.046 | 53.02 |
| 6037406800 | 4926 | Los Angeles | 91790 | West Covina | -117.9540873 | 34.0639081 | 42.28 | 79.20 | 75-80% | Yes | 0.051 | 69.23 |
| 6029006500 | 5152 | Kern | 93505 | California City | -117.8818657 | 35.2098975 | 42.27 | 79.19 | 75-80% | Yes | 0.062 | 91.10 |
| 6067007007 | 5356 | Sacramento | 95833 | Sacramento | -121.4819301 | 38.6030702 | 42.27 | 79.18 | 75-80% | Yes | 0.048 | 60.88 |
| 6029002816 | 5465 | Kern | 93309 | Bakersfield | -119.0617564 | 35.3264609 | 42.26 | 79.17 | 75-80% | Yes | 0.065 | 98.18 |
| 6037402803 | 3436 | Los Angeles | 91766 | Pomona | -117.7453051 | 34.0478488 | 42.26 | 79.15 | 75-80% | Yes | 0.057 | 82.10 |
| 6077001000 | 4915 | San Joaquin | 95204 | Stockton | -121.347405 | 37.9661183 | 42.25 | 79.14 | 75-80% | Yes | 0.046 | 53.02 |
| 6071000903 | 4338 | San Bernardino | 91786 | Upland | -117.6393283 | 34.0962131 | 42.24 | 79.13 | 75-80% | Yes | 0.062 | 91.10 |
| 6029001202 | 6264 | Kern | 93305 | Bakersfield | -118.9753831 | 35.377139 | 42.23 | 79.11 | 75-80% | Yes | 0.065 | 98.18 |
| 6013320001 | 3615 | Contra Costa | 94553 | Martinez | -122.0963526 | 38.0218002 | 42.22 | 79.10 | 75-80% | Yes | 0.035 | 16.94 |
| 6037212800 | 4273 | Los Angeles | 90019 | Los Angeles | -118.3305985 | 34.0518662 | 42.22 | 79.09 | 75-80% | Yes | 0.048 | 60.88 |
| 6037237800 | 4371 | Los Angeles | 90044 | Los Angeles | -118.2981214 | 33.9709601 | 42.21 | 79.08 | 75-80% | Yes | 0.046 | 53.02 |
| 6071001906 | 7060 | San Bernardino | 91761 | Ontario | -117.5757345 | 34.0081401 | 42.21 | 79.06 | 75-80% | Yes | 0.062 | 91.10 |
| 6059099802 | 5111 | Orange | 92683 | Westminster | -117.9939643 | 33.7573411 | 42.20 | 79.05 | 75-80% | Yes | 0.044 | 40.49 |
| 6037238100 | 4626 | Los Angeles | 90047 | Los Angeles | -118.3111989 | 33.963628 | 42.19 | 79.04 | 75-80% | Yes | 0.046 | 53.02 |
| 6037120104 | 2310 | Los Angeles | 91402 | Panorama City | -118.4493666 | 34.223963 | 42.17 | 79.03 | 75-80% | Yes | 0.057 | 82.10 |
| 6037237900 | 3621 | Los Angeles | 90047 | Los Angeles | -118.3111925 | 33.9709293 | 42.16 | 79.01 | 75-80% | Yes | 0.046 | 53.02 |
| 6039000506 | 6438 | Madera | 93638 | Madera | -120.0985344 | 37.0354441 | 42.16 | 79.00 | 75-80% | Yes | 0.062 | 91.10 |
| 6067004601 | 7614 | Sacramento | 95824 | Sacramento | -121.4471878 | 38.5171831 | 42.16 | 78.99 | 75-80% | Yes | 0.048 | 60.88 |
| 6107002800 | 3395 | Tulare | 93247 | Lindsay | -119.0940852 | 36.1948818 | 42.15 | 78.98 | 75-80% | Yes | 0.062 | 91.10 |
| 6037530005 | 4346 | Los Angeles | 90640 | Montebello | -118.1114296 | 34.0282744 | 42.14 | 78.96 | 75-80% | Yes | 0.048 | 60.88 |
| 6029006202 | 6401 | Kern | 93203 | Arvin | -118.8856972 | 35.1821665 | 42.13 | 78.95 | 75-80% | Yes | 0.065 | 98.18 |
| 6107003901 | 7184 | Tulare | 93257 | Porterville | -118.9982663 | 36.0619829 | 42.12 | 78.94 | 75-80% | Yes | 0.065 | 98.18 |
| 6037481604 | 3942 | Los Angeles | 91801 | Alhambra | -118.1260625 | 34.0832452 | 42.11 | 78.93 | 75-80% | Yes | 0.050 | 64.80 |
| 6037604100 | 7058 | Los Angeles | 90260 | Lawndale | -118.348246 | 33.8815498 | 42.10 | 78.91 | 75-80% | Yes | 0.044 | 40.49 |
| 6013314104 | 7118 | Contra Costa | 94565 | Pittsburg | -121.9443678 | 38.0232458 | 42.09 | 78.90 | 75-80% | Yes | 0.038 | 22.34 |
| 6029000504 | 4086 | Kern | 93308 | Bakersfield | -119.0737144 | 35.4176598 | 42.08 | 78.89 | 75-80% | Yes | 0.062 | 91.10 |
| 6037211201 | 2645 | Los Angeles | 90004 | Los Angeles | -118.2984693 | 34.0745294 | 42.08 | 78.88 | 75-80% | Yes | 0.048 | 60.88 |
| 6107001200 | 1337 | Tulare | 93291 | Visalia | -119.299985 | 36.3302301 | 42.07 | 78.86 | 75-80% | Yes | 0.060 | 85.21 |
| 6047000701 | 3191 | Merced | 95301 | Atwater | -120.6047007 | 37.3473607 | 42.07 | 78.85 | 75-80% | Yes | 0.057 | 82.10 |
| 6037224310 | 2025 | Los Angeles | 90006 | Los Angeles | -118.2827213 | 34.044384 | 42.05 | 78.84 | 75-80% | Yes | 0.046 | 53.02 |
| 6001437101 | 6448 | Alameda | 94587 | Union City | -122.126873 | 37.6059048 | 42.05 | 78.82 | 75-80% | Yes | 0.033 | 11.08 |
| 6107002202 | 5542 | Tulare | 93274 | Tulare | -119.3656637 | 36.2075367 | 42.04 | 78.81 | 75-80% | Yes | 0.060 | 85.21 |
| 6065040607 | 9317 | Riverside | 91752 | Mira Loma | -117.5457941 | 34.0114705 | 42.04 | 78.80 | 75-80% | Yes | 0.062 | 91.10 |
| 6037550201 | 2941 | Los Angeles | 90650 | Norwalk | -118.0840271 | 33.9283366 | 42.03 | 78.79 | 75-80% | Yes | 0.046 | 53.02 |
| 6059074801 | 5499 | Orange | 92703 | Santa Ana | -117.889227 | 33.7435528 | 42.01 | 78.77 | 75-80% | Yes | 0.046 | 53.02 |
| 6037277200 | 2490 | Los Angeles | 90045 | Los Angeles | -118.3822385 | 33.9526287 | 42.00 | 78.76 | 75-80% | Yes | 0.046 | 53.02 |
| 6075012502 | 3821 | San Francisco | 94102 | San Francisco | -122.4125954 | 37.783933 | 42.00 | 78.75 | 75-80% | Yes | 0.030 | 7.58 |
| 6001444601 | 4761 | Alameda | 94560 | Newark | -122.0162378 | 37.5270492 | 41.99 | 78.74 | 75-80% | Yes | 0.035 | 16.94 |
| 6037120106 | 4417 | Los Angeles | 91402 | Panorama City | -118.4563804 | 34.223102 | 41.99 | 78.72 | 75-80% | Yes | 0.057 | 82.10 |
| 6037221303 | 2551 | Los Angeles | 90006 | Los Angeles | -118.3084384 | 34.0453825 | 41.98 | 78.71 | 75-80% | Yes | 0.046 | 53.02 |
| 6037432602 | 4554 | Los Angeles | 91732 | El Monte | -118.0052966 | 34.0814708 | 41.97 | 78.70 | 75-80% | Yes | 0.051 | 69.23 |
| 6029004702 | 4051 | Kern | 93250 | MC Farland | -119.2157446 | 35.6752697 | 41.96 | 78.69 | 75-80% | Yes | 0.062 | 91.10 |
| 6085503113 | 4760 | Santa Clara | 95110 | San Jose | -121.8808148 | 37.3157311 | 41.93 | 78.67 | 75-80% | Yes | 0.038 | 22.34 |
| 6075017601 | 7630 | San Francisco | 94103 | San Francisco | -122.4107241 | 37.7794338 | 41.93 | 78.66 | 75-80% | Yes | 0.030 | 7.58 |
| 6037405302 | 5351 | Los Angeles | 91790 | West Covina | -117.9439942 | 34.0764659 | 41.93 | 78.65 | 75-80% | Yes | 0.053 | 73.93 |
| 6065043517 | 6815 | Riverside | 92582 | San Jacinto | -117.0240132 | 33.8219345 | 41.93 | 78.64 | 75-80% | Yes | 0.065 | 98.18 |
| 6077003308 | 1590 | San Joaquin | 95207 | Stockton | -121.308748 | 37.9905867 | 41.88 | 78.62 | 75-80% | Yes | 0.046 | 53.02 |
| 6037481603 | 3802 | Los Angeles | 91801 | Alhambra | -118.1201868 | 34.0841555 | 41.88 | 78.61 | 75-80% | Yes | 0.050 | 64.80 |
| 6107003001 | 4652 | Tulare | 93274 | Tulare | -119.3563298 | 36.2002109 | 41.87 | 78.60 | 75-80% | Yes | 0.060 | 85.21 |
| 6037404201 | 3711 | Los Angeles | 91702 | Azusa | -117.8953117 | 34.1265873 | 41.86 | 78.58 | 75-80% | Yes | 0.055 | 77.87 |
| 6059086602 | 6131 | Orange | 92801 | Anaheim | -117.9331121 | 33.8440428 | 41.85 | 78.57 | 75-80% | Yes | 0.046 | 53.02 |
| 6039000602 | 5161 | Madera | 93638 | Madera | -120.0609518 | 36.9719028 | 41.84 | 78.56 | 75-80% | Yes | 0.062 | 91.10 |
| 6065046200 | 3341 | Riverside | 92225 | Blythe | -114.5966887 | 33.5994708 | 41.83 | 78.55 | 75-80% | Yes | 0.044 | 40.49 |
| 6059001402 | 5185 | Orange | 90631 | La Habra | -117.9286916 | 33.9388223 | 41.82 | 78.53 | 75-80% | Yes | 0.048 | 60.88 |
| 6001401000 | 5678 | Alameda | 94608 | Emeryville | -122.2719625 | 37.831217 | 41.81 | 78.52 | 75-80% | Yes | 0.030 | 7.58 |
| 6037535803 | 4458 | Los Angeles | 90280 | South Gate | -118.2100618 | 33.9480872 | 41.81 | 78.51 | 75-80% | Yes | 0.044 | 40.49 |
| 6037302003 | 3578 | Los Angeles | 91206 | Glendale | -118.2439771 | 34.1487828 | 41.80 | 78.50 | 75-80% | Yes | 0.051 | 69.23 |
| 6019003102 | 7048 | Fresno | 93612 | Clovis | -119.7158384 | 36.8048512 | 41.79 | 78.48 | 75-80% | Yes | 0.065 | 98.18 |
| 6111002300 | 7430 | Ventura | 93001 | Ventura | -119.2996148 | 34.2906641 | 41.78 | 78.47 | 75-80% | Yes | 0.046 | 53.02 |
| 6001407200 | 6746 | Alameda | 94601 | Oakland | -122.2192819 | 37.7777848 | 41.76 | 78.46 | 75-80% | Yes | 0.030 | 7.58 |
| 6037500700 | 6496 | Los Angeles | 90660 | Pico Rivera | -118.0983071 | 34.0000986 | 41.74 | 78.45 | 75-80% | Yes | 0.046 | 53.02 |
| 6037603802 | 4153 | Los Angeles | 90260 | Lawndale | -118.3481442 | 33.8909804 | 41.74 | 78.43 | 75-80% | Yes | 0.044 | 40.49 |
| 6067003700 | 4219 | Sacramento | 95820 | Sacramento | -121.4693182 | 38.5336237 | 41.73 | 78.42 | 75-80% | Yes | 0.048 | 60.88 |
| 6037541801 | 4903 | Los Angeles | 90262 | Lynwood | -118.1946754 | 33.9118044 | 41.68 | 78.41 | 75-80% | Yes | 0.044 | 40.49 |
| 6073004100 | 6546 | San Diego | 92102 | San Diego | -117.1292493 | 32.714833 | 41.67 | 78.40 | 75-80% | Yes | 0.038 | 22.34 |
| 6037602200 | 7314 | Los Angeles | 90250 | Hawthorne | -118.3695802 | 33.9231962 | 41.63 | 78.38 | 75-80% | Yes | 0.044 | 40.49 |
| 6039000603 | 5585 | Madera | 93638 | Madera | -120.0497327 | 36.9793126 | 41.62 | 78.37 | 75-80% | Yes | 0.062 | 91.10 |
| 6037402200 | 6584 | Los Angeles | 91768 | Pomona | -117.764973 | 34.0818183 | 41.61 | 78.36 | 75-80% | Yes | 0.057 | 82.10 |
| 6071002902 | 6584 | San Bernardino | 92335 | Fontana | -117.422734 | 34.1030715 | 41.59 | 78.35 | 75-80% | Yes | 0.065 | 98.18 |
| 6037554104 | 2600 | Los Angeles | 90706 | Bellflower | -118.1195565 | 33.8931415 | 41.59 | 78.33 | 75-80% | Yes | 0.044 | 40.49 |
| 6029003304 | 5248 | Kern | 93251 | MC Kittrick | -119.5019126 | 35.2582904 | 41.58 | 78.32 | 75-80% | Yes | 0.060 | 85.21 |
| 6099000202 | 6593 | Stanislaus | 95361 | Oakdale | -120.8597786 | 37.7554813 | 41.57 | 78.31 | 75-80% | Yes | 0.053 | 73.93 |
| 6065042520 | 4669 | Riverside | 92553 | Moreno Valley | -117.2250806 | 33.9304056 | 41.57 | 78.29 | 75-80% | Yes | 0.065 | 98.18 |
| 6071003900 | 5484 | San Bernardino | 92376 | Rialto | -117.3605165 | 34.1002723 | 41.57 | 78.28 | 75-80% | Yes | 0.065 | 98.18 |
| 6037530102 | 5116 | Los Angeles | 90640 | Montebello | -118.1154765 | 34.0153528 | 41.56 | 78.27 | 75-80% | Yes | 0.046 | 53.02 |
| 6071000826 | 4075 | San Bernardino | 91786 | Upland | -117.6606253 | 34.0917424 | 41.56 | 78.26 | 75-80% | Yes | 0.062 | 91.10 |
| 6037189101 | 2743 | Los Angeles | 90027 | Los Angeles | -118.288505 | 34.1047367 | 41.56 | 78.24 | 75-80% | Yes | 0.050 | 64.80 |
| 6037134521 | 3126 | Los Angeles | 91303 | Canoga Park | -118.5952099 | 34.2046284 | 41.54 | 78.23 | 75-80% | Yes | 0.057 | 82.10 |
| 6019008402 | 1152 | Fresno | 93622 | Firebaugh | -120.6584593 | 36.8689002 | 41.53 | 78.22 | 75-80% | Yes | 0.053 | 73.93 |
| 6037406200 | 5678 | Los Angeles | 91723 | Covina | -117.8979159 | 34.0764235 | 41.53 | 78.21 | 75-80% | Yes | 0.055 | 77.87 |
| 6053014500 | 4410 | Monterey | 93901 | Salinas | -121.6367228 | 36.6483701 | 41.52 | 78.19 | 75-80% | Yes | 0.033 | 11.08 |
| 6065042719 | 5025 | Riverside | 92567 | Nuevo | -117.1606951 | 33.7976018 | 41.52 | 78.18 | 75-80% | Yes | 0.065 | 98.18 |
| 6037201601 | 2288 | Los Angeles | 90032 | Los Angeles | -118.1774624 | 34.0726971 | 41.51 | 78.17 | 75-80% | Yes | 0.048 | 60.88 |
| 6071009912 | 4762 | San Bernardino | 92395 | Victorville | -117.3135296 | 34.5067365 | 41.50 | 78.16 | 75-80% | Yes | 0.065 | 98.18 |
| 6071003607 | 5369 | San Bernardino | 92376 | Rialto | -117.3711097 | 34.0887229 | 41.49 | 78.14 | 75-80% | Yes | 0.065 | 98.18 |
| 6037127604 | 2939 | Los Angeles | 91406 | Van Nuys | -118.479788 | 34.1993151 | 41.49 | 78.13 | 75-80% | Yes | 0.057 | 82.10 |
| 6065042624 | 3784 | Riverside | 92555 | Moreno Valley | -117.1127892 | 33.890645 | 41.48 | 78.12 | 75-80% | Yes | 0.065 | 98.18 |
| 6037293307 | 2306 | Los Angeles | 90710 | Harbor City | -118.3035314 | 33.7873712 | 41.47 | 78.11 | 75-80% | Yes | 0.042 | 31.84 |
| 6077003801 | 12552 | San Joaquin | 95206 | Stockton | -121.3121279 | 37.9086799 | 41.46 | 78.09 | 75-80% | Yes | 0.048 | 60.88 |
| 6111002400 | 2571 | Ventura | 93001 | Ventura | -119.2944448 | 34.2763658 | 41.45 | 78.08 | 75-80% | Yes | 0.046 | 53.02 |
| 6085503117 | 3120 | Santa Clara | 95122 | San Jose | -121.8515984 | 37.3274092 | 41.45 | 78.07 | 75-80% | Yes | 0.038 | 22.34 |
| 6037212900 | 4074 | Los Angeles | 90019 | Los Angeles | -118.3215149 | 34.0494541 | 41.44 | 78.06 | 75-80% | Yes | 0.048 | 60.88 |
| 6071010011 | 5221 | San Bernardino | 92345 | Hesperia | -117.2985044 | 34.4610778 | 41.44 | 78.04 | 75-80% | Yes | 0.065 | 98.18 |
| 6065041411 | 3187 | Riverside | 92879 | Corona | -117.5159682 | 33.8784662 | 41.43 | 78.03 | 75-80% | Yes | 0.060 | 85.21 |
| 6047000503 | 3292 | Merced | 95388 | Winton | -120.5674195 | 37.4217409 | 41.43 | 78.02 | 75-80% | Yes | 0.057 | 82.10 |
| 6077003312 | 3220 | San Joaquin | 95207 | Stockton | -121.3014143 | 37.995688 | 41.42 | 78.00 | 75-80% | Yes | 0.046 | 53.02 |
| 6077003500 | 20177 | San Joaquin | 95212 | Stockton | -121.2450807 | 38.0298609 | 41.42 | 77.99 | 75-80% | Yes | 0.048 | 60.88 |
| 6013313102 | 3984 | Contra Costa | 94565 | Pittsburg | -121.8644952 | 38.0040446 | 41.39 | 77.98 | 75-80% | Yes | 0.040 | 25.87 |
| 6071004601 | 7032 | San Bernardino | 92407 | San Bernardino | -117.3292141 | 34.1673473 | 41.38 | 77.97 | 75-80% | Yes | 0.068 | 100.00 |
| 6077001400 | 4425 | San Joaquin | 95204 | Stockton | -121.299006 | 37.9853105 | 41.37 | 77.95 | 75-80% | Yes | 0.046 | 53.02 |
| 6013309000 | 2771 | Contra Costa | 94565 | Pittsburg | -121.8641513 | 38.0392742 | 41.37 | 77.94 | 75-80% | Yes | 0.038 | 22.34 |
| 6081602100 | 3615 | San Mateo | 94080 | South San Francisco | -122.4064157 | 37.6618027 | 41.37 | 77.93 | 75-80% | Yes | 0.030 | 7.58 |
| 6085501501 | 4278 | Santa Clara | 95116 | San Jose | -121.8583166 | 37.3417324 | 41.36 | 77.92 | 75-80% | Yes | 0.038 | 22.34 |
| 6071000821 | 3478 | San Bernardino | 91786 | Upland | -117.6910613 | 34.1007304 | 41.36 | 77.90 | 75-80% | Yes | 0.062 | 91.10 |
| 6037120105 | 2812 | Los Angeles | 91402 | Panorama City | -118.4488025 | 34.2340798 | 41.35 | 77.89 | 75-80% | Yes | 0.057 | 82.10 |
| 6073002502 | 6264 | San Diego | 92105 | San Diego | -117.1080241 | 32.7281564 | 41.35 | 77.88 | 75-80% | Yes | 0.040 | 25.87 |
| 6071004401 | 4383 | San Bernardino | 92376 | Rialto | -117.3529084 | 34.0941764 | 41.35 | 77.87 | 75-80% | Yes | 0.065 | 98.18 |
| 6059087401 | 3954 | Orange | 92805 | Anaheim | -117.914757 | 33.8282532 | 41.35 | 77.85 | 75-80% | Yes | 0.046 | 53.02 |
| 6001401600 | 2163 | Alameda | 94607 | Oakland | -122.2814825 | 37.8173716 | 41.35 | 77.84 | 75-80% | Yes | 0.030 | 7.58 |
| 6067009006 | 4940 | Sacramento | 95827 | Sacramento | -121.321468 | 38.5733375 | 41.34 | 77.83 | 75-80% | Yes | 0.051 | 69.23 |
| 6099000404 | 5564 | Stanislaus | 95356 | Modesto | -120.9854187 | 37.6999879 | 41.32 | 77.82 | 75-80% | Yes | 0.053 | 73.93 |
| 6067005102 | 4481 | Sacramento | 95828 | Sacramento | -121.3831371 | 38.4891675 | 41.30 | 77.80 | 75-80% | Yes | 0.050 | 64.80 |
| 6071010802 | 5338 | San Bernardino | 92407 | San Bernardino | -117.3520808 | 34.2700821 | 41.27 | 77.79 | 75-80% | Yes | 0.068 | 100.00 |
| 6029004701 | 8868 | Kern | 93250 | MC Farland | -119.2425798 | 35.6738272 | 41.27 | 77.78 | 75-80% | Yes | 0.062 | 91.10 |
| 6077005132 | 3257 | San Joaquin | 95337 | Manteca | -121.228666 | 37.7934323 | 41.26 | 77.77 | 75-80% | Yes | 0.051 | 69.23 |

| | | | | | | | | | | | |
|---|---|---|---|---|---|---|---|---|---|---|---|
| 6077003305 | 3704 | San Joaquin | 95207 | Stockton | -121.3072654 | 38.0019053 | 41.25 | 77.75 | 75-80% | Yes | 0.046 |
| 6071001707 | 5966 | San Bernardino | 91762 | Ontario | -117.6602067 | 34.0453895 | 41.25 | 77.74 | 75-80% | Yes | 0.062 |
| 6065042518 | 3670 | Riverside | 92553 | Moreno Valley | -117.2218309 | 33.9118904 | 41.24 | 77.73 | 75-80% | Yes | 0.065 |
| 6037554600 | 4374 | Los Angeles | 90650 | Norwalk | -118.0892922 | 33.8836452 | 41.23 | 77.71 | 75-80% | Yes | 0.044 |
| 6059099904 | 6352 | Orange | 92683 | Westminster | -118.0028957 | 33.7664264 | 41.22 | 77.70 | 75-80% | Yes | 0.044 |
| 6073003404 | 4634 | San Diego | 92102 | San Diego | -117.0939094 | 32.7139554 | 41.20 | 77.69 | 75-80% | Yes | 0.040 |
| 6029003115 | 5482 | Kern | 93304 | Bakersfield | -119.0269531 | 35.3035415 | 41.19 | 77.68 | 75-80% | Yes | 0.065 |
| 6037552700 | 6985 | Los Angeles | 90650 | Norwalk | -118.0732039 | 33.8985899 | 41.18 | 77.66 | 75-80% | Yes | 0.046 |
| 6047000401 | 1834 | Merced | 95374 | Stevinson | -120.8828702 | 37.3402713 | 41.17 | 77.65 | 75-80% | Yes | 0.057 |
| 6037294301 | 2448 | Los Angeles | 90744 | Wilmington | -118.2795526 | 33.7946618 | 41.17 | 77.64 | 75-80% | Yes | 0.042 |
| 6065042007 | 4339 | Riverside | 92570 | Perris | -117.409206 | 33.7812173 | 41.17 | 77.63 | 75-80% | Yes | 0.060 |
| 6071000403 | 4678 | San Bernardino | 91710 | Chino | -117.7129533 | 34.0393978 | 41.15 | 77.61 | 75-80% | Yes | 0.060 |
| 6037195803 | 2603 | Los Angeles | 90026 | Los Angeles | -118.2769285 | 34.0818094 | 41.14 | 77.60 | 75-80% | Yes | 0.046 |
| 6013313101 | 7251 | Contra Costa | 94565 | Pittsburg | -121.8828347 | 38.00648 | 41.13 | 77.59 | 75-80% | Yes | 0.038 |
| 6071001311 | 3236 | San Bernardino | 91730 | Rancho Cucamonga | -117.5989117 | 34.0855935 | 41.13 | 77.58 | 75-80% | Yes | 0.062 |
| 6025012001 | 3831 | Imperial | 92231 | Calexico | -115.4863589 | 32.6685861 | 41.11 | 77.56 | 75-80% | Yes | 0.053 |
| 6047002600 | 5319 | Merced | 95341 | Merced | -120.4047796 | 37.2895999 | 41.11 | 77.55 | 75-80% | Yes | 0.057 |
| 6037238400 | 4497 | Los Angeles | 90047 | Los Angeles | -118.3089917 | 33.9563491 | 41.08 | 77.54 | 75-80% | Yes | 0.046 |
| 6037501002 | 4861 | Los Angeles | 90606 | Whittier | -118.0620458 | 33.9822771 | 41.08 | 77.53 | 75-80% | Yes | 0.046 |
| 6071012700 | 4052 | San Bernardino | 91761 | Ontario | -117.5557735 | 34.0490461 | 41.08 | 77.51 | 75-80% | Yes | 0.062 |
| 6037404803 | 1741 | Los Angeles | 91706 | Baldwin Park | -117.9659888 | 34.0671875 | 41.06 | 77.50 | 75-80% | Yes | 0.051 |
| 6037119320 | 4694 | Los Angeles | 91402 | Panorama City | -118.4547256 | 34.2369427 | 41.05 | 77.49 | 75-80% | Yes | 0.057 |
| 6065041004 | 4590 | Riverside | 92505 | Riverside | -117.4977413 | 33.9589888 | 41.04 | 77.48 | 75-80% | Yes | 0.062 |
| 6107002304 | 1740 | Tulare | 93274 | Tulare | -119.3385748 | 36.2117012 | 41.03 | 77.46 | 75-80% | Yes | 0.060 |
| 6037234000 | 5335 | Los Angeles | 90008 | Los Angeles | -118.3214867 | 34.0120868 | 41.03 | 77.45 | 75-80% | Yes | 0.046 |
| 6037534802 | 2875 | Los Angeles | 90255 | Huntington Park | -118.2216728 | 33.971185 | 41.01 | 77.44 | 75-80% | Yes | 0.046 |
| 6037530006 | 3963 | Los Angeles | 90640 | Montebello | -118.1126395 | 34.020019 | 40.99 | 77.42 | 75-80% | Yes | 0.046 |
| 6037530204 | 3682 | Los Angeles | 90640 | Montebello | -118.1283266 | 34.0190693 | 40.96 | 77.41 | 75-80% | Yes | 0.046 |
| 6065043507 | 6700 | Riverside | 92543 | Hemet | -116.9725527 | 33.7681153 | 40.95 | 77.40 | 75-80% | Yes | 0.065 |
| 6001425104 | 3175 | Alameda | 94608 | Emeryville | -122.2833798 | 37.8326526 | 40.94 | 77.39 | 75-80% | Yes | 0.030 |
| 6037134800 | 5949 | Los Angeles | 91306 | Winnetka | -118.5715501 | 34.1955756 | 40.94 | 77.37 | 75-80% | Yes | 0.057 |
| 6107000600 | 6200 | Tulare | 93615 | Cutler | -119.259301 | 36.4957832 | 40.93 | 77.36 | 75-80% | Yes | 0.062 |
| 6037115302 | 4351 | Los Angeles | 91324 | Northridge | -118.5503049 | 34.2259651 | 40.89 | 77.35 | 75-80% | Yes | 0.060 |
| 6037104203 | 5210 | Los Angeles | 91331 | Pacoima | -118.4115543 | 34.2790581 | 40.88 | 77.34 | 75-80% | Yes | 0.057 |
| 6037134001 | 3765 | Los Angeles | 91303 | Canoga Park | -118.5917267 | 34.2029146 | 40.87 | 77.32 | 75-80% | Yes | 0.057 |
| 6077004902 | 6106 | San Joaquin | 95320 | Escalon | -121.036072 | 37.8408351 | 40.86 | 77.31 | 75-80% | Yes | 0.051 |
| 6099002902 | 7609 | Stanislaus | 95326 | Hughson | -120.8727904 | 37.6029399 | 40.84 | 77.30 | 75-80% | Yes | 0.055 |
| 6059086701 | 8876 | Orange | 92801 | Anaheim | -117.9566062 | 33.8509554 | 40.83 | 77.29 | 75-80% | Yes | 0.046 |
| 6059087504 | 7141 | Orange | 92802 | Anaheim | -117.9020305 | 33.79754 | 40.83 | 77.27 | 75-80% | Yes | 0.046 |
| 6019004505 | 4866 | Fresno | 93710 | Fresno | -119.7903644 | 36.8157101 | 40.82 | 77.26 | 75-80% | Yes | 0.062 |
| 6037500300 | 2903 | Los Angeles | 90601 | Whittier | -118.039504 | 34.0142722 | 40.81 | 77.25 | 75-80% | Yes | 0.046 |
| 6025010500 | 6593 | Imperial | 92227 | Brawley | -115.544002 | 32.9875564 | 40.81 | 77.24 | 75-80% | Yes | 0.051 |
| 6071010300 | 3846 | San Bernardino | 92309 | Baker | -115.8769708 | 35.143329 | 40.78 | 77.22 | 75-80% | Yes | 0.062 |
| 6019003803 | 8153 | Fresno | 93723 | Fresno | -119.9090383 | 36.7715459 | 40.78 | 77.21 | 75-80% | Yes | 0.062 |
| 6099001002 | 3153 | Stanislaus | 95350 | Modesto | -120.9783229 | 37.6547424 | 40.78 | 77.20 | 75-80% | Yes | 0.053 |
| 6031000500 | 5476 | Kings | 93230 | Hanford | -119.7178905 | 36.3278538 | 40.77 | 77.19 | 75-80% | Yes | 0.062 |
| 6031001402 | 2384 | Kings | 93212 | Corcoran | -119.5600632 | 36.0990535 | 40.75 | 77.17 | 75-80% | Yes | 0.062 |
| 6037127300 | 4460 | Los Angeles | 91406 | Van Nuys | -118.4697535 | 34.2084003 | 40.75 | 77.16 | 75-80% | Yes | 0.057 |
| 6037552002 | 3721 | Los Angeles | 90650 | Norwalk | -118.0876278 | 33.9131184 | 40.75 | 77.15 | 75-80% | Yes | 0.046 |
| 6065041102 | 4185 | Riverside | 92505 | Riverside | -117.4871242 | 33.9403266 | 40.74 | 77.13 | 75-80% | Yes | 0.062 |
| 6065048902 | 5957 | Riverside | 92551 | Moreno Valley | -117.2217753 | 33.8974314 | 40.74 | 77.12 | 75-80% | Yes | 0.065 |
| 6059001802 | 7154 | Orange | 92833 | Fullerton | -117.9720126 | 33.8629545 | 40.74 | 77.11 | 75-80% | Yes | 0.046 |
| 6037187101 | 3235 | Los Angeles | 90039 | Los Angeles | -118.2602407 | 34.1160806 | 40.73 | 77.10 | 75-80% | Yes | 0.050 |
| 6059074501 | 6880 | Orange | 92701 | Santa Ana | -117.856975 | 33.7385343 | 40.72 | 77.08 | 75-80% | Yes | 0.046 |
| 6037408623 | 3023 | Los Angeles | 91745 | Hacienda Heights | -117.9376426 | 33.9952944 | 40.72 | 77.07 | 75-80% | Yes | 0.050 |
| 6099000801 | 6216 | Stanislaus | 95350 | Modesto | -121.0032806 | 37.6798075 | 40.70 | 77.06 | 75-80% | Yes | 0.053 |
| 6037127603 | 2938 | Los Angeles | 91406 | Van Nuys | -118.4800026 | 34.1957245 | 40.70 | 77.05 | 75-80% | Yes | 0.057 |
| 6037432401 | 3789 | Los Angeles | 91731 | El Monte | -118.0220588 | 34.0905474 | 40.69 | 77.03 | 75-80% | Yes | 0.051 |
| 6037302102 | 6439 | Los Angeles | 91205 | Glendale | -118.2363625 | 34.1347576 | 40.69 | 77.02 | 75-80% | Yes | 0.051 |
| 6037531603 | 3568 | Los Angeles | 90022 | Los Angeles | -118.1615136 | 34.0298023 | 40.67 | 77.01 | 75-80% | Yes | 0.046 |
| 6037212701 | 2430 | Los Angeles | 90019 | Los Angeles | -118.3193139 | 34.0543037 | 40.66 | 77.00 | 75-80% | Yes | 0.048 |
| 6067000800 | 1425 | Sacramento | 95814 | Sacramento | -121.5044795 | 38.5770653 | 40.66 | 76.98 | 75-80% | Yes | 0.046 |
| 6037482401 | 3761 | Los Angeles | 91770 | Rosemead | -118.0863199 | 34.0674668 | 40.66 | 76.97 | 75-80% | Yes | 0.048 |
| 6019005409 | 3560 | Fresno | 93710 | Fresno | -119.7632087 | 36.8194482 | 40.65 | 76.96 | 75-80% | Yes | 0.065 |
| 6037213100 | 2721 | Los Angeles | 90019 | Los Angeles | -118.3126928 | 34.0506364 | 40.64 | 76.95 | 75-80% | Yes | 0.048 |
| 6001407400 | 3954 | Alameda | 94601 | Oakland | -122.2067479 | 37.7710407 | 40.62 | 76.93 | 75-80% | Yes | 0.030 |
| 6037134710 | 5287 | Los Angeles | 91306 | Winnetka | -118.5779426 | 34.2023735 | 40.62 | 76.92 | 75-80% | Yes | 0.057 |
| 6019001413 | 4605 | Fresno | 93727 | Fresno | -119.6662713 | 36.721296 | 40.61 | 76.91 | 75-80% | Yes | 0.065 |
| 6085505202 | 5867 | Santa Clara | 95050 | Santa Clara | -121.960583 | 37.3702343 | 40.60 | 76.89 | 75-80% | Yes | 0.035 |
| 6037213402 | 4645 | Los Angeles | 90006 | Los Angeles | -118.2878882 | 34.0498405 | 40.60 | 76.88 | 75-80% | Yes | 0.046 |
| 6075023300 | 2624 | San Francisco | 94124 | San Francisco | -122.3977689 | 37.7254139 | 40.59 | 76.87 | 75-80% | Yes | 0.030 |
| 6059076204 | 4492 | Orange | 92867 | Orange | -117.8611662 | 33.812775 | 40.56 | 76.86 | 75-80% | Yes | 0.046 |
| 6037123800 | 5531 | Los Angeles | 91606 | North Hollywood | -118.4014361 | 34.1797368 | 40.56 | 76.84 | 75-80% | Yes | 0.055 |
| 6029005103 | 2564 | Kern | 93308 | Bakersfield | -118.9832964 | 35.484358 | 40.55 | 76.83 | 75-80% | Yes | 0.062 |
| 6037601202 | 4115 | Los Angeles | 90301 | Inglewood | -118.3569389 | 33.9490727 | 40.54 | 76.82 | 75-80% | Yes | 0.046 |
| 6073010009 | 6693 | San Diego | 92173 | San Ysidro | -117.0528794 | 32.5473763 | 40.54 | 76.81 | 75-80% | Yes | 0.035 |
| 6037133100 | 5446 | Los Angeles | 91335 | Reseda | -118.5442623 | 34.1852284 | 40.54 | 76.79 | 75-80% | Yes | 0.060 |
| 6059074901 | 9170 | Orange | 92703 | Santa Ana | -117.878908 | 33.7432715 | 40.54 | 76.78 | 75-80% | Yes | 0.046 |
| 6059075201 | 5822 | Orange | 92703 | Santa Ana | -117.9006509 | 33.752863 | 40.53 | 76.77 | 75-80% | Yes | 0.046 |
| 6065041407 | 5830 | Riverside | 92505 | Riverside | -117.4726363 | 33.9110608 | 40.51 | 76.76 | 75-80% | Yes | 0.062 |
| 6107001003 | 19732 | Tulare | 93291 | Visalia | -119.3547493 | 36.3512901 | 40.50 | 76.74 | 75-80% | Yes | 0.060 |
| 6071006603 | 4958 | San Bernardino | 92324 | Colton | -117.3367238 | 34.0821073 | 40.50 | 76.73 | 75-80% | Yes | 0.065 |
| 6037134305 | 3847 | Los Angeles | 91304 | Canoga Park | -118.6016952 | 34.217634 | 40.50 | 76.72 | 75-80% | Yes | 0.057 |
| 6037234200 | 2376 | Los Angeles | 90018 | Los Angeles | -118.3311523 | 34.0164074 | 40.47 | 76.71 | 75-80% | Yes | 0.046 |
| 6071002901 | 4446 | San Bernardino | 92335 | Fontana | -117.4303742 | 34.1048553 | 40.46 | 76.69 | 75-80% | Yes | 0.065 |
| 6071000823 | 6658 | San Bernardino | 91786 | Upland | -117.6718364 | 34.1008082 | 40.45 | 76.68 | 75-80% | Yes | 0.062 |
| 6065045707 | 6397 | Riverside | 92236 | Coachella | -116.1857289 | 33.6810687 | 40.44 | 76.67 | 75-80% | Yes | 0.062 |
| 6019007400 | 3548 | Fresno | 93242 | Laton | -119.7117317 | 36.4550589 | 40.42 | 76.66 | 75-80% | Yes | 0.062 |
| 6099002605 | 3855 | Stanislaus | 95307 | Ceres | -120.942101 | 37.6018684 | 40.42 | 76.64 | 75-80% | Yes | 0.055 |
| 6037277400 | 1533 | Los Angeles | 90045 | Los Angeles | -118.3743486 | 33.9490354 | 40.40 | 76.63 | 75-80% | Yes | 0.046 |
| 6047000303 | 2158 | Merced | 95334 | Livingston | -120.7492817 | 37.3413009 | 40.40 | 76.62 | 75-80% | Yes | 0.057 |
| 6099003202 | 16007 | Stanislaus | 95363 | Patterson | -121.1449685 | 37.4647933 | 40.39 | 76.60 | 75-80% | Yes | 0.055 |
| 6071010025 | 7405 | San Bernardino | 92395 | Victorville | -117.3247037 | 34.4831244 | 40.38 | 76.59 | 75-80% | Yes | 0.065 |
| 6077004308 | 3870 | San Joaquin | 95240 | Lodi | -121.2760564 | 38.1085229 | 40.37 | 76.58 | 75-80% | Yes | 0.048 |
| 6037195903 | 2216 | Los Angeles | 90026 | Los Angeles | -118.2824401 | 34.0808128 | 40.37 | 76.57 | 75-80% | Yes | 0.048 |
| 6037408133 | 5739 | Los Angeles | 91792 | West Covina | -117.9093406 | 34.0241796 | 40.35 | 76.55 | 75-80% | Yes | 0.051 |
| 6077005206 | 16787 | San Joaquin | 95304 | Tracy | -121.4950941 | 37.7740044 | 40.34 | 76.54 | 75-80% | Yes | 0.050 |
| 6037554801 | 3366 | Los Angeles | 90701 | Artesia | -118.0832638 | 33.8768314 | 40.33 | 76.53 | 75-80% | Yes | 0.044 |
| 6037211420 | 3859 | Los Angeles | 90004 | Los Angeles | -118.3029424 | 34.0726364 | 40.32 | 76.52 | 75-80% | Yes | 0.048 |
| 6059099402 | 8090 | Orange | 92647 | Huntington Beach | -117.9977976 | 33.7083364 | 40.32 | 76.50 | 75-80% | Yes | 0.044 |
| 6037294200 | 4951 | Los Angeles | 90744 | Wilmington | -118.2693892 | 33.7948377 | 40.31 | 76.49 | 75-80% | Yes | 0.042 |
| 6037900300 | 4514 | Los Angeles | 93535 | Lancaster | -118.0881554 | 34.7401046 | 40.30 | 76.48 | 75-80% | Yes | 0.062 |
| 6037191302 | 2422 | Los Angeles | 90027 | Los Angeles | -118.2884036 | 34.0962277 | 40.29 | 76.47 | 75-80% | Yes | 0.048 |
| 6065040405 | 5353 | Riverside | 92509 | Riverside | -117.4673294 | 33.9886544 | 40.29 | 76.45 | 75-80% | Yes | 0.062 |
| 6037543321 | 5418 | Los Angeles | 90747 | Carson | -118.25076 | 33.8656664 | 40.27 | 76.44 | 75-80% | Yes | 0.042 |
| 6037540202 | 6845 | Los Angeles | 90262 | Lynwood | -118.2061463 | 33.9338474 | 40.26 | 76.43 | 75-80% | Yes | 0.044 |
| 6037432402 | 6310 | Los Angeles | 91731 | El Monte | -118.0271968 | 34.0848582 | 40.25 | 76.42 | 75-80% | Yes | 0.050 |
| 6067009601 | 6621 | Sacramento | 95832 | Sacramento | -121.4860583 | 38.4632776 | 40.23 | 76.40 | 75-80% | Yes | 0.048 |
| 6001402700 | 1569 | Alameda | 94612 | Oakland | -122.2769914 | 37.8103872 | 40.23 | 76.39 | 75-80% | Yes | 0.030 |
| 6037222100 | 3877 | Los Angeles | 90018 | Los Angeles | -118.3023777 | 34.027317 | 40.19 | 76.38 | 75-80% | Yes | 0.046 |
| 6037571703 | 3667 | Los Angeles | 90805 | Long Beach | -118.191734 | 33.8493201 | 40.18 | 76.37 | 75-80% | Yes | 0.042 |
| 6073003305 | 5738 | San Diego | 92113 | San Diego | -117.0900688 | 32.697889 | 40.17 | 76.35 | 75-80% | Yes | 0.040 |
| 6071000606 | 4374 | San Bernardino | 91710 | Chino | -117.6740258 | 34.0155355 | 40.17 | 76.34 | 75-80% | Yes | 0.060 |
| 6029001901 | 3434 | Kern | 93304 | Bakersfield | -119.0347862 | 35.3608268 | 40.17 | 76.33 | 75-80% | Yes | 0.065 |
| 6037576903 | 3802 | Los Angeles | 90804 | Long Beach | -118.1567668 | 33.7807787 | 40.16 | 76.31 | 75-80% | Yes | 0.042 |
| 6037221210 | 3300 | Los Angeles | 90006 | Los Angeles | -118.3028633 | 34.0436623 | 40.15 | 76.30 | 75-80% | Yes | 0.046 |
| 6025010700 | 4322 | Imperial | 92227 | Brawley | -115.5213711 | 32.9668249 | 40.14 | 76.29 | 75-80% | Yes | 0.051 |
| 6071001200 | 4730 | San Bernardino | 91764 | Ontario | -117.6461154 | 34.0794803 | 40.13 | 76.28 | 75-80% | Yes | 0.062 |
| 6071006100 | 8346 | San Bernardino | 92404 | San Bernardino | -117.2600059 | 34.1602104 | 40.12 | 76.26 | 75-80% | Yes | 0.068 |
| 6037320201 | 3756 | Los Angeles | 91340 | San Fernando | -118.4396292 | 34.2860283 | 40.11 | 76.25 | 75-80% | Yes | 0.057 |
| 6037503105 | 3634 | Los Angeles | 90604 | Whittier | -118.0344855 | 33.927592 | 40.11 | 76.24 | 75-80% | Yes | 0.046 |
| 6037209820 | 2968 | Los Angeles | 90015 | Los Angeles | -118.2782548 | 34.0472132 | 40.11 | 76.23 | 75-80% | Yes | 0.046 |
| 6037294110 | 4140 | Los Angeles | 90744 | Wilmington | -118.260391 | 33.7979932 | 40.11 | 76.21 | 75-80% | Yes | 0.042 |
| 6075012301 | 2734 | San Francisco | 94102 | San Francisco | -122.4107461 | 37.7859203 | 40.11 | 76.20 | 75-80% | Yes | 0.030 |
| 6077003407 | 2914 | San Joaquin | 95210 | Stockton | -121.2957942 | 38.0094599 | 40.10 | 76.19 | 75-80% | Yes | 0.048 |
| 6037481401 | 6061 | Los Angeles | 91776 | San Gabriel | -118.1039746 | 34.0831934 | 40.09 | 76.18 | 75-80% | Yes | 0.050 |
| 6073022000 | 4186 | San Diego | 91950 | National City | -117.0871662 | 32.6798189 | 40.08 | 76.16 | 75-80% | Yes | 0.040 |
| 6037431100 | 6629 | Los Angeles | 91016 | Monrovia | -117.9971918 | 34.1360755 | 40.08 | 76.15 | 75-80% | Yes | 0.053 |
| 6037502003 | 2693 | Los Angeles | 90602 | Whittier | -118.0393767 | 33.9631768 | 40.07 | 76.14 | 75-80% | Yes | 0.046 |
| 6059087806 | 5702 | Orange | 92804 | Anaheim | -117.9716595 | 33.8103743 | 40.06 | 76.13 | 75-80% | Yes | 0.046 |
| 6059087901 | 3638 | Orange | 90680 | Stanton | -117.9918205 | 33.7992973 | 40.06 | 76.11 | 75-80% | Yes | 0.046 |
| 6071002207 | 4461 | San Bernardino | 91739 | Rancho Cucamonga | -117.5314807 | 34.0931847 | 40.05 | 76.10 | 75-80% | Yes | 0.065 |
| 6037310800 | 4909 | Los Angeles | 91506 | Burbank | -118.3221829 | 34.1741488 | 40.05 | 76.09 | 75-80% | Yes | 0.055 |
| 6013364002 | 5518 | Contra Costa | 94806 | San Pablo | -122.317385 | 37.993894 | 40.04 | 76.08 | 75-80% | Yes | 0.033 |
| 6037104204 | 3375 | Los Angeles | 91342 | Sylmar | -118.3931176 | 34.2912875 | 40.03 | 76.06 | 75-80% | Yes | 0.057 |
| 6087110300 | 6710 | Santa Cruz | 95076 | Watsonville | -121.7551684 | 36.9114441 | 39.99 | 76.05 | 75-80% | Yes | 0.038 |
| 6065041302 | 4303 | Riverside | 92505 | Riverside | -117.4769727 | 33.9207824 | 39.99 | 76.04 | 75-80% | Yes | 0.062 |
| 6037544002 | 3142 | Los Angeles | 90810 | Long Beach | -118.2179347 | 33.8289273 | 39.98 | 76.02 | 75-80% | Yes | 0.042 |
| 6065045502 | 3744 | Riverside | 92201 | Indio | -116.2278745 | 33.7209537 | 39.98 | 76.01 | 75-80% | Yes | 0.062 |
| 6013392200 | 10605 | Contra Costa | 94806 | San Pablo | -122.3542717 | 37.9923334 | 39.97 | 76.00 | 75-80% | Yes | 0.033 |
| 6059110302 | 6033 | Orange | 90620 | Buena Park | -118.0111021 | 33.8527439 | 39.97 | 75.99 | 75-80% | Yes | 0.046 |
| 6037134522 | 3954 | Los Angeles | 91303 | Canoga Park | -118.6017183 | 34.2046744 | 39.97 | 75.97 | 75-80% | Yes | 0.057 |
| 6067004401 | 4122 | Sacramento | 95820 | Sacramento | -121.4507437 | 38.5311698 | 39.97 | 75.96 | 75-80% | Yes | 0.048 |
| 6095251802 | 2538 | Solano | 94589 | Vallejo | -122.2570455 | 38.1261466 | 39.96 | 75.95 | 75-80% | Yes | 0.035 |
| 6001422000 | 1756 | Alameda | 94710 | Berkeley | -122.3013426 | 37.8590327 | 39.95 | 75.94 | 75-80% | Yes | 0.030 |
| 6029006401 | 8320 | Kern | 93241 | Lamont | -118.9121193 | 35.2692638 | 39.95 | 75.92 | 75-80% | Yes | 0.065 |
| 6013302005 | 6592 | Contra Costa | 94561 | Oakley | -121.732928 | 37.9993161 | 39.94 | 75.91 | 75-80% | Yes | 0.042 |
| 6071003401 | 7502 | San Bernardino | 92335 | Fontana | -117.413994 | 34.0994731 | 39.93 | 75.90 | 75-80% | Yes | 0.065 |
| 6065043005 | 5049 | Riverside | 92530 | Lake Elsinore | -117.360641 | 33.7062728 | 39.93 | 75.89 | 75-80% | Yes | 0.057 |
| 6065042521 | 4922 | Riverside | 92553 | Moreno Valley | -117.2272172 | 33.9220397 | 39.92 | 75.87 | 75-80% | Yes | 0.065 |
| 6097153200 | 7522 | Sonoma | 95407 | Santa Rosa | -122.7284015 | 38.3880499 | 39.90 | 75.86 | 75-80% | Yes | 0.030 |
| 6037113422 | 6057 | Los Angeles | 91306 | Winnetka | -118.5809624 | 34.2242131 | 39.90 | 75.85 | 75-80% | Yes | 0.057 |
| 6107001601 | 5587 | Tulare | 93223 | Farmersville | -119.203884 | 36.3027536 | 39.90 | 75.84 | 75-80% | Yes | 0.060 |
| 6029002814 | 4158 | Kern | 93309 | Bakersfield | -119.049604 | 35.3359425 | 39.90 | 75.82 | 75-80% | Yes | 0.065 |
| 6037106520 | 5837 | Los Angeles | 91342 | Sylmar | -118.4613524 | 34.3088574 | 39.90 | 75.81 | 75-80% | Yes | 0.060 |
| 6037407601 | 4366 | Los Angeles | 91744 | La Puente | -117.9461731 | 34.0384097 | 39.89 | 75.80 | 75-80% | Yes | 0.051 |
| 6037296902 | 3851 | Los Angeles | 90731 | San Pedro | -118.2956244 | 33.7344542 | 39.89 | 75.79 | 75-80% | Yes | 0.042 |
| 6019003804 | 5531 | Fresno | 93722 | Fresno | -119.8713084 | 36.7790926 | 39.89 | 75.77 | 75-80% | Yes | 0.062 |
| 6059011714 | 499 | Orange | 92806 | Anaheim | -117.8519526 | 33.8561656 | 39.88 | 75.76 | 75-80% | Yes | 0.048 |
| 6071002606 | 7089 | San Bernardino | 92337 | Fontana | -117.4765849 | 34.0422028 | 39.88 | 75.75 | 75-80% | Yes | 0.065 |
| 6037212304 | 1804 | Los Angeles | 90005 | Los Angeles | -118.2979144 | 34.0598537 | 39.87 | 75.73 | 75-80% | Yes | 0.048 |
| 6037143200 | 3743 | Los Angeles | 91602 | North Hollywood | -118.3720618 | 34.1494399 | 39.86 | 75.72 | 75-80% | Yes | 0.053 |
| 6037543702 | 7083 | Los Angeles | 90745 | Carson | -118.2696681 | 33.8135657 | 39.85 | 75.71 | 75-80% | Yes | 0.042 |
| 6037408631 | 5087 | Los Angeles | 91745 | Hacienda Heights | -117.9583769 | 34.0002603 | 39.85 | 75.70 | 75-80% | Yes | 0.048 |
| 6037603703 | 2703 | Los Angeles | 90250 | Hawthorne | -118.3395521 | 33.898257 | 39.80 | 75.68 | 75-80% | Yes | 0.044 |
| 6039000400 | 1288 | Madera | 93622 | Firebaugh | -120.3501354 | 36.9193435 | 39.79 | 75.67 | 75-80% | Yes | 0.060 |
| 6073005200 | 4563 | San Diego | 92101 | San Diego | -117.1521097 | 32.7155275 | 39.76 | 75.66 | 75-80% | Yes | 0.038 |
| 6037301900 | 7810 | Los Angeles | 91206 | Glendale | -118.2464109 | 34.1556019 | 39.76 | 75.65 | 75-80% | Yes | 0.051 |
| 6107002100 | 2499 | Tulare | 93274 | Tulare | -119.4390093 | 36.2434094 | 39.76 | 75.63 | 75-80% | Yes | 0.062 |
| 6029003500 | 6156 | Kern | 93268 | Taft | -119.4610717 | 35.1445259 | 39.73 | 75.62 | 75-80% | Yes | 0.060 |
| 6037530003 | 2983 | Los Angeles | 90640 | Montebello | -118.0889928 | 34.0286266 | 39.70 | 75.61 | 75-80% | Yes | 0.046 |
| 6037601001 | 2154 | Los Angeles | 90301 | Inglewood | -118.3486875 | 33.9643251 | 39.70 | 75.60 | 75-80% | Yes | 0.046 |
| 6073012600 | 5047 | San Diego | 91910 | Chula Vista | -117.1032969 | 32.6205359 | 39.69 | 75.58 | 75-80% | Yes | 0.040 |
| 6071003803 | 4732 | San Bernardino | 92376 | Rialto | -117.3642213 | 34.1129611 | 39.69 | 75.57 | 75-80% | Yes | 0.065 |
| 6001405401 | 3957 | Alameda | 94606 | Oakland | -122.2494562 | 37.7965384 | 39.68 | 75.56 | 75-80% | Yes | 0.030 |
| 6001440301 | 7312 | Alameda | 94587 | Union City | -122.0427542 | 37.6011866 | 39.68 | 75.55 | 75-80% | Yes | 0.035 |
| 6099002701 | 3811 | Stanislaus | 95351 | Modesto | -120.951749 | 37.6156323 | 39.67 | 75.53 | 75-80% | Yes | 0.053 |
| 6059088501 | 6785 | Orange | 92843 | Garden Grove | -117.9263206 | 33.774306 | 39.67 | 75.52 | 75-80% | Yes | 0.046 |
| 6073003303 | 4193 | San Diego | 92113 | San Diego | -117.0986406 | 32.6928057 | 39.66 | 75.51 | 75-80% | Yes | 0.038 |
| 6059001201 | 5505 | Orange | 90631 | La Habra | -117.9531628 | 33.9324824 | 39.65 | 75.50 | 75-80% | Yes | 0.046 |
| 6001406201 | 4649 | Alameda | 94601 | Oakland | -122.230736 | 37.7850448 | 39.64 | 75.48 | 75-80% | Yes | 0.030 |
| 6037115404 | 2913 | Los Angeles | 91324 | Northridge | -118.5416703 | 34.2255624 | 39.63 | 75.47 | 75-80% | Yes | 0.060 |
| 6031001701 | 9142 | Kings | 93204 | Avenal | -120.0793193 | 35.9048358 | 39.63 | 75.46 | 75-80% | Yes | 0.057 |
| 6071006201 | 3583 | San Bernardino | 92404 | San Bernardino | -117.2668235 | 34.1426727 | 39.62 | 75.44 | 75-80% | Yes | 0.068 |
| 6081604200 | 4170 | San Mateo | 94066 | San Bruno | -122.4061516 | 37.6273351 | 39.61 | 75.43 | 75-80% | Yes | 0.030 |
| 6077003406 | 3700 | San Joaquin | 95210 | Stockton | -121.3027511 | 38.0247217 | 39.60 | 75.42 | 75-80% | Yes | 0.048 |
| 6065042517 | 3278 | Riverside | 92553 | Moreno Valley | -117.213154 | 33.9119021 | 39.60 | 75.41 | 75-80% | Yes | 0.065 |
| 6037131020 | 5698 | Los Angeles | 91335 | Reseda | -118.5395023 | 34.2001766 | 39.60 | 75.39 | 75-80% | Yes | 0.060 |
| 6095251901 | 5072 | Solano | 94589 | Vallejo | -122.2405897 | 38.1366028 | 39.57 | 75.38 | 75-80% | Yes | 0.035 |
| 6059088802 | 5551 | Orange | 92844 | Garden Grove | -117.9804239 | 33.7655645 | 39.57 | 75.37 | 75-80% | Yes | 0.046 |
| 6107000301 | 6717 | Tulare | 93618 | Dinuba | -119.4459533 | 36.5281824 | 39.57 | 75.36 | 75-80% | Yes | 0.065 |
| 6071004603 | 5717 | San Bernardino | 92407 | San Bernardino | -117.3081225 | 34.1566319 | 39.54 | 75.34 | 75-80% | Yes | 0.068 |
| 6053014102 | 2259 | Monterey | 93933 | Marina | -121.8005663 | 36.6645043 | 39.54 | 75.33 | 75-80% | Yes | 0.035 |
| 6037404301 | 5665 | Los Angeles | 91702 | Azusa | -117.9041106 | 34.1275266 | 39.53 | 75.32 | 75-80% | Yes | 0.055 |
| 6037199120 | 4086 | Los Angeles | 90031 | Los Angeles | -118.1996896 | 34.0700703 | 39.52 | 75.31 | 75-80% | Yes | 0.046 |
| 6037197200 | 3757 | Los Angeles | 90031 | Los Angeles | -118.2343586 | 34.0907632 | 39.52 | 75.29 | 75-80% | Yes | 0.046 |
| 6037550202 | 5496 | Los Angeles | 90650 | Norwalk | -118.0896892 | 33.921285 | 39.52 | 75.28 | 75-80% | Yes | 0.046 |
| 6037503902 | 4636 | Los Angeles | 90638 | La Mirada | -118.0185593 | 33.8844479 | 39.52 | 75.27 | 75-80% | Yes | 0.046 |
| 6071001804 | 5145 | San Bernardino | 91761 | Ontario | -117.6439623 | 34.0248561 | 39.51 | 75.26 | 75-80% | Yes | 0.062 |
| 6037117408 | 2830 | Los Angeles | 91343 | North Hills | -118.4703709 | 34.2248464 | 39.51 | 75.24 | 75-80% | Yes | 0.057 |
| 6073002501 | 5504 | San Diego | 92105 | San Diego | -117.1096419 | 32.7400405 | 39.50 | 75.23 | 75-80% | Yes | 0.040 |
| 6099000807 | 3694 | Stanislaus | 95356 | Modesto | -121.0406376 | 37.6858679 | 39.50 | 75.22 | 75-80% | Yes | 0.053 |
| 6047001902 | 2572 | Merced | 95333 | Le Grand | -120.2255343 | 37.2234532 | 39.48 | 75.20 | 75-80% | Yes | 0.057 |
| 6077005106 | 6017 | San Joaquin | 95337 | Manteca | -121.2429025 | 37.7321434 | 39.46 | 75.19 | 75-80% | Yes | 0.051 |
| 6065049500 | 8421 | Riverside | 92201 | Indio | -116.2106697 | 33.7098989 | 39.46 | 75.18 | 75-80% | Yes | 0.062 |
| 6077000401 | 3043 | San Joaquin | 95203 | Stockton | -121.3057992 | 37.9613437 | 39.45 | 75.17 | 75-80% | Yes | 0.046 |
| 6037432300 | 3951 | Los Angeles | 91731 | El Monte | -118.0460653 | 34.0866395 | 39.44 | 75.15 | 75-80% | Yes | 0.050 |
| 6037481103 | 5350 | Los Angeles | 91776 | San Gabriel | -118.0983354 | 34.093458 | 39.43 | 75.14 | 75-80% | Yes | 0.051 |
| 6037219500 | 1737 | Los Angeles | 90016 | Los Angeles | -118.3405648 | 34.0209191 | 39.43 | 75.13 | 75-80% | Yes | 0.046 |
| 6019004212 | 10762 | Fresno | 93722 | Fresno | -119.8690146 | 36.8150842 | 39.42 | 75.12 | 75-80% | Yes | 0.060 |
| 6037650901 | 5928 | Los Angeles | 90501 | Torrance | -118.3181299 | 33.8382367 | 39.42 | 75.10 | 75-80% | Yes | 0.042 |
| 6037553000 | 4825 | Los Angeles | 90650 | Norwalk | -118.1040525 | 33.8945795 | 39.41 | 75.09 | 75-80% | Yes | 0.044 |
| 6019004001 | 7248 | Fresno | 93630 | Kerman | -120.0782738 | 36.734826 | 39.41 | 75.08 | 75-80% | Yes | 0.062 |
| 6059063604 | 3835 | Orange | 92627 | Costa Mesa | -117.9373909 | 33.6383219 | 39.41 | 75.07 | 75-80% | Yes | 0.044 |
| 6037543604 | 5620 | Los Angeles | 90745 | Carson | -118.279506 | 33.8095428 | 39.40 | 75.05 | 75-80% | Yes | 0.042 |
| 6037302004 | 4214 | Los Angeles | 91206 | Glendale | -118.2387735 | 34.1488475 | 39.39 | 75.04 | 75-80% | Yes | 0.051 |
| 6065042409 | 3299 | Riverside | 92557 | Moreno Valley | -117.2523984 | 33.956709 | 39.38 | 75.03 | 75-80% | Yes | 0.065 |
| 6001437200 | 6755 | Alameda | 94545 | Hayward | -122.1115983 | 37.6431726 | 39.37 | 75.02 | 75-80% | Yes | 0.033 |
| 6037310701 | 2361 | Los Angeles | 91502 | Burbank | -118.312844 | 34.1853923 | 39.35 | 75.00 | 75-80% | Yes | 0.055 |
| 6029001801 | 5579 | Kern | 93309 | Bakersfield | -119.0495029 | 35.3601532 | 39.35 | 74.99 | 70-75% | Yes | 0.065 |
| 6037117520 | 4052 | Los Angeles | 91343 | North Hills | -118.4621861 | 34.2300853 | 39.34 | 74.98 | 70-75% | Yes | 0.057 |

| | | | | | | | | | | | |
|---|---|---|---|---|---|---|---|---|---|---|---|
| 6071009913 | 6068 | San Bernardino | 92395 | Victorville | -117.287959 | 34.5147771 | 39.33 | 74.97 | 70-75% | No | 0.065 |
| 6037222700 | 3748 | Los Angeles | 90007 | Los Angeles | -118.2856809 | 34.0209197 | 39.32 | 74.95 | 70-75% | No | 0.046 |
| 6065043001 | 5593 | Riverside | 92530 | Lake Elsinore | -117.3166621 | 33.6483829 | 39.32 | 74.94 | 70-75% | No | 0.057 |
| 6065041405 | 4096 | Riverside | 92503 | Riverside | -117.4884574 | 33.8925283 | 39.32 | 74.93 | 70-75% | No | 0.062 |
| 6099003500 | 10720 | Stanislaus | 95360 | Newman | -121.0296226 | 37.3133564 | 39.31 | 74.91 | 70-75% | No | 0.055 |
| 6037535804 | 5498 | Los Angeles | 90280 | South Gate | -118.2033667 | 33.9476027 | 39.30 | 74.90 | 70-75% | No | 0.044 |
| 6071002101 | 4399 | San Bernardino | 91730 | Rancho Cucamonga | -117.6242993 | 34.098786 | 39.30 | 74.89 | 70-75% | No | 0.065 |
| 6073010013 | 5484 | San Diego | 92173 | San Ysidro | -117.047455 | 32.5555517 | 39.27 | 74.88 | 70-75% | No | 0.035 |
| 6081602200 | 8084 | San Mateo | 94080 | South San Francisco | -122.4175676 | 37.656229 | 39.27 | 74.86 | 70-75% | No | 0.030 |
| 6001428700 | 4119 | Alameda | 94501 | Alameda | -122.3050028 | 37.7801283 | 39.27 | 74.85 | 70-75% | No | 0.030 |
| 6099000203 | 8756 | Stanislaus | 95361 | Oakdale | -120.8306667 | 37.7663393 | 39.25 | 74.84 | 70-75% | No | 0.053 |
| 6037602106 | 5702 | Los Angeles | 90250 | Hawthorne | -118.3581593 | 33.9204031 | 39.25 | 74.83 | 70-75% | No | 0.044 |
| 6037700102 | 4061 | Los Angeles | 90046 | Los Angeles | -118.3538978 | 34.0892775 | 39.25 | 74.81 | 70-75% | No | 0.050 |
| 6037207502 | 2589 | Los Angeles | 90071 | Los Angeles | -118.253084 | 34.052707 | 39.24 | 74.80 | 70-75% | No | 0.046 |
| 6073014400 | 3523 | San Diego | 91945 | Lemon Grove | -117.0341068 | 32.7435374 | 39.22 | 74.79 | 70-75% | No | 0.042 |
| 6037600602 | 2551 | Los Angeles | 90303 | Inglewood | -118.3307594 | 33.9416202 | 39.21 | 74.78 | 70-75% | No | 0.044 |
| 6059087505 | 5222 | Orange | 92802 | Anaheim | -117.9305408 | 33.8106404 | 39.21 | 74.76 | 70-75% | No | 0.046 |
| 6107003002 | 3519 | Tulare | 93274 | Tulare | -119.3660695 | 36.1909171 | 39.20 | 74.75 | 70-75% | No | 0.060 |
| 6037502402 | 3755 | Los Angeles | 90660 | Pico Rivera | -118.0905791 | 33.9737097 | 39.19 | 74.74 | 70-75% | No | 0.046 |
| 6039000507 | 10546 | Madera | 93638 | Madera | -119.9941659 | 37.0365737 | 39.18 | 74.73 | 70-75% | No | 0.062 |
| 6037408004 | 2246 | Los Angeles | 91792 | West Covina | -117.9154818 | 34.0378087 | 39.18 | 74.71 | 70-75% | No | 0.051 |
| 6037190202 | 3044 | Los Angeles | 90028 | Los Angeles | -118.3355353 | 34.1034022 | 39.17 | 74.70 | 70-75% | No | 0.050 |
| 6037301206 | 5363 | Los Angeles | 91202 | Glendale | -118.2724011 | 34.1631614 | 39.17 | 74.69 | 70-75% | No | 0.053 |
| 6065048200 | 4301 | Riverside | 92879 | Corona | -117.5407373 | 33.8889347 | 39.16 | 74.68 | 70-75% | No | 0.060 |
| 6037603801 | 4483 | Los Angeles | 90260 | Lawndale | -118.3480963 | 33.8985392 | 39.16 | 74.66 | 70-75% | No | 0.044 |
| 6067006800 | 7455 | Sacramento | 95815 | Sacramento | -121.4564773 | 38.6174056 | 39.15 | 74.65 | 70-75% | No | 0.048 |
| 6037188202 | 2347 | Los Angeles | 90027 | Los Angeles | -118.2797464 | 34.1163982 | 39.13 | 74.64 | 70-75% | No | 0.050 |
| 6037910101 | 1684 | Los Angeles | 93552 | Palmdale | -118.0270881 | 34.6056671 | 39.11 | 74.62 | 70-75% | No | 0.062 |
| 6037500900 | 5719 | Los Angeles | 90660 | Pico Rivera | -118.0803987 | 33.9934787 | 39.09 | 74.61 | 70-75% | No | 0.046 |
| 6067001800 | 4686 | Sacramento | 95817 | Sacramento | -121.4637479 | 38.5542221 | 39.08 | 74.60 | 70-75% | No | 0.048 |
| 6031000900 | 8057 | Kings | 93230 | Hanford | -119.6473042 | 36.3332087 | 39.07 | 74.59 | 70-75% | No | 0.062 |
| 6037407501 | 4411 | Los Angeles | 91744 | La Puente | -117.9477593 | 34.0466402 | 39.07 | 74.57 | 70-75% | No | 0.051 |
| 6059087902 | 6039 | Orange | 90680 | Stanton | -117.9916514 | 33.792014 | 39.06 | 74.56 | 70-75% | No | 0.046 |
| 6085501502 | 4549 | Santa Clara | 95116 | San Jose | -121.8644444 | 37.3375921 | 39.06 | 74.55 | 70-75% | No | 0.035 |
| 6019005304 | 5305 | Fresno | 93726 | Fresno | -119.7429548 | 36.8049374 | 39.05 | 74.54 | 70-75% | No | 0.065 |
| 6039000508 | 6878 | Madera | 93636 | Madera | -119.9602082 | 36.962996 | 39.04 | 74.52 | 70-75% | No | 0.062 |
| 6075023001 | 5216 | San Francisco | 94124 | San Francisco | -122.4017602 | 37.7351925 | 39.04 | 74.51 | 70-75% | No | 0.030 |
| 6013306002 | 2985 | Contra Costa | 94509 | Antioch | -121.7619241 | 38.0077971 | 39.04 | 74.50 | 70-75% | No | 0.042 |
| 6025011202 | 5444 | Imperial | 92243 | El Centro | -115.5742854 | 32.8019687 | 39.03 | 74.49 | 70-75% | No | 0.055 |
| 6101050202 | 4037 | Sutter | 95991 | Yuba City | -121.6128856 | 39.1353485 | 39.01 | 74.47 | 70-75% | No | 0.048 |
| 6067007501 | 6067 | Sacramento | 95841 | Sacramento | -121.3442772 | 38.668659 | 39.01 | 74.46 | 70-75% | No | 0.051 |
| 6037602301 | 6265 | Los Angeles | 90250 | Hawthorne | -118.3657428 | 33.9067458 | 39.00 | 74.45 | 70-75% | No | 0.044 |
| 6065041202 | 4458 | Riverside | 92503 | Riverside | -117.4707309 | 33.9344497 | 39.00 | 74.44 | 70-75% | No | 0.062 |
| 6037554521 | 5752 | Los Angeles | 90703 | Cerritos | -118.1001151 | 33.872133 | 39.00 | 74.42 | 70-75% | No | 0.044 |
| 6037104620 | 3539 | Los Angeles | 91331 | Pacoima | -118.4224647 | 34.2579043 | 39.00 | 74.41 | 70-75% | No | 0.055 |
| 6037408303 | 4029 | Los Angeles | 90601 | Whittier | -118.0053624 | 34.0341304 | 38.99 | 74.40 | 70-75% | No | 0.048 |
| 6071003507 | 4887 | San Bernardino | 92376 | Rialto | -117.3900615 | 34.1104058 | 38.98 | 74.39 | 70-75% | No | 0.065 |
| 6037270200 | 3761 | Los Angeles | 90034 | Los Angeles | -118.3797742 | 34.0328855 | 38.98 | 74.37 | 70-75% | No | 0.046 |
| 6099000503 | 4930 | Stanislaus | 95356 | Modesto | -121.0584292 | 37.6937352 | 38.96 | 74.36 | 70-75% | No | 0.053 |
| 6031000100 | 3457 | Kings | 93230 | Hanford | -119.5983712 | 36.3928943 | 38.95 | 74.35 | 70-75% | No | 0.062 |
| 6037212204 | 3344 | Los Angeles | 90005 | Los Angeles | -118.2865323 | 34.0598252 | 38.95 | 74.33 | 70-75% | No | 0.046 |
| 6037573401 | 1439 | Los Angeles | 90755 | Signal Hill | -118.1796451 | 33.8128912 | 38.94 | 74.32 | 70-75% | No | 0.042 |
| 6099000402 | 10095 | Stanislaus | 95357 | Modesto | -120.9477458 | 37.7234293 | 38.92 | 74.31 | 70-75% | No | 0.053 |
| 6047000603 | 6143 | Merced | 95301 | Atwater | -120.5979864 | 37.3657737 | 38.91 | 74.30 | 70-75% | No | 0.057 |
| 6037188300 | 3536 | Los Angeles | 90039 | Los Angeles | -118.2647639 | 34.1207814 | 38.91 | 74.28 | 70-75% | No | 0.050 |
| 6037192420 | 3637 | Los Angeles | 90004 | Los Angeles | -118.3113323 | 34.0798801 | 38.91 | 74.27 | 70-75% | No | 0.048 |
| 6107002400 | 11470 | Tulare | 93274 | Tulare | -119.2730278 | 36.1906178 | 38.89 | 74.26 | 70-75% | No | 0.060 |
| 6037124300 | 4046 | Los Angeles | 91601 | North Hollywood | -118.3642963 | 34.1757378 | 38.88 | 74.25 | 70-75% | No | 0.053 |
| 6053000502 | 4161 | Monterey | 93905 | Salinas | -121.6341984 | 36.6844661 | 38.85 | 74.23 | 70-75% | No | 0.033 |
| 6067009005 | 3165 | Sacramento | 95827 | Sacramento | -121.3075665 | 38.5280935 | 38.83 | 74.22 | 70-75% | No | 0.051 |
| 6071000504 | 5450 | San Bernardino | 91710 | Chino | -117.6947801 | 33.9996795 | 38.83 | 74.21 | 70-75% | No | 0.057 |
| 6065041404 | 3725 | Riverside | 92503 | Riverside | -117.4724177 | 33.8922119 | 38.82 | 74.20 | 70-75% | No | 0.062 |
| 6071007800 | 4912 | San Bernardino | 92374 | Redlands | -117.2191957 | 34.0734306 | 38.82 | 74.18 | 70-75% | No | 0.068 |
| 6059087200 | 7643 | Orange | 92801 | Anaheim | -117.9285475 | 33.8357946 | 38.82 | 74.17 | 70-75% | No | 0.046 |
| 6013314102 | 5923 | Contra Costa | 94565 | Pittsburg | -121.9174417 | 38.0314621 | 38.81 | 74.16 | 70-75% | No | 0.038 |
| 6037139302 | 4422 | Los Angeles | 91356 | Tarzana | -118.5383656 | 34.1767231 | 38.81 | 74.15 | 70-75% | No | 0.057 |
| 6077003311 | 3303 | San Joaquin | 95210 | Stockton | -121.3162854 | 38.0349259 | 38.80 | 74.13 | 70-75% | No | 0.048 |
| 6037113321 | 5473 | Los Angeles | 91311 | Chatsworth | -118.5918392 | 34.2533539 | 38.77 | 74.12 | 70-75% | No | 0.057 |
| 6037131800 | 5341 | Los Angeles | 91335 | Reseda | -118.527308 | 34.2047091 | 38.76 | 74.11 | 70-75% | No | 0.060 |
| 6085504319 | 6936 | Santa Clara | 95133 | San Jose | -121.8672939 | 37.3736366 | 38.76 | 74.10 | 70-75% | No | 0.035 |
| 6013315000 | 3281 | Contra Costa | 94520 | Concord | -122.0293918 | 38.036962 | 38.74 | 74.08 | 70-75% | No | 0.038 |
| 6099000910 | 6585 | Stanislaus | 95355 | Modesto | -120.9667084 | 37.6726269 | 38.71 | 74.07 | 70-75% | No | 0.053 |
| 6037554511 | 4029 | Los Angeles | 90703 | Cerritos | -118.0387822 | 33.8799253 | 38.70 | 74.06 | 70-75% | No | 0.046 |
| 6077005113 | 6156 | San Joaquin | 95336 | Manteca | -121.1893705 | 37.8040048 | 38.70 | 74.04 | 70-75% | No | 0.051 |
| 6071004404 | 5570 | San Bernardino | 92410 | San Bernardino | -117.3419748 | 34.1014098 | 38.69 | 74.03 | 70-75% | No | 0.065 |
| 6085503112 | 4025 | Santa Clara | 95112 | San Jose | -121.8709918 | 37.3223412 | 38.66 | 74.02 | 70-75% | No | 0.035 |
| 6095253500 | 8423 | Solano | 94571 | Rio Vista | -121.7715997 | 38.2050259 | 38.66 | 74.01 | 70-75% | No | 0.042 |
| 6071000304 | 5871 | San Bernardino | 91763 | Montclair | -117.6940864 | 34.0536544 | 38.66 | 73.99 | 70-75% | No | 0.060 |
| 6073015902 | 5220 | San Diego | 92020 | El Cajon | -116.9696997 | 32.7840084 | 38.65 | 73.98 | 70-75% | No | 0.044 |
| 6037404903 | 2905 | Los Angeles | 91706 | Baldwin Park | -117.9726977 | 34.0875933 | 38.64 | 73.97 | 70-75% | No | 0.051 |
| 6037482303 | 5818 | Los Angeles | 91770 | Rosemead | -118.098744 | 34.0691098 | 38.63 | 73.96 | 70-75% | No | 0.048 |
| 6037406701 | 3246 | Los Angeles | 91790 | West Covina | -117.9463753 | 34.0552717 | 38.62 | 73.94 | 70-75% | No | 0.051 |
| 6025012400 | 1266 | Imperial | 92283 | Winterhaven | -115.1126532 | 33.2019033 | 38.61 | 73.93 | 70-75% | No | 0.050 |
| 6029003205 | 8998 | Kern | 93313 | Bakersfield | -119.0427006 | 35.2885017 | 38.60 | 73.92 | 70-75% | No | 0.065 |
| 6037119342 | 3180 | Los Angeles | 91402 | Panorama City | -118.4472671 | 34.2407688 | 38.58 | 73.91 | 70-75% | No | 0.057 |
| 6037203710 | 3259 | Los Angeles | 90033 | Los Angeles | -118.2009322 | 34.0498932 | 38.57 | 73.89 | 70-75% | No | 0.046 |
| 6077003307 | 4559 | San Joaquin | 95207 | Stockton | -121.31597 | 38.0131208 | 38.57 | 73.88 | 70-75% | No | 0.046 |
| 6037535701 | 6050 | Los Angeles | 90280 | South Gate | -118.2041472 | 33.9601821 | 38.56 | 73.87 | 70-75% | No | 0.044 |
| 6029001103 | 4782 | Kern | 93306 | Bakersfield | -118.9577019 | 35.3723166 | 38.56 | 73.86 | 70-75% | No | 0.062 |
| 6095252402 | 5238 | Solano | 94534 | Fairfield | -122.0693691 | 38.2204068 | 38.53 | 73.84 | 70-75% | No | 0.038 |
| 6037212202 | 3612 | Los Angeles | 90005 | Los Angeles | -118.2879321 | 34.0563658 | 38.51 | 73.83 | 70-75% | No | 0.048 |
| 6071001903 | 8028 | San Bernardino | 91708 | Chino | -117.6224884 | 33.9664971 | 38.50 | 73.82 | 70-75% | No | 0.060 |
| 6029006303 | 6784 | Kern | 93203 | Arvin | -118.846623 | 35.2017267 | 38.49 | 73.81 | 70-75% | No | 0.065 |
| 6037600912 | 5517 | Los Angeles | 90302 | Inglewood | -118.3411003 | 33.9771678 | 38.48 | 73.79 | 70-75% | No | 0.046 |
| 6037183620 | 3264 | Los Angeles | 90042 | Los Angeles | -118.1898523 | 34.115176 | 38.47 | 73.78 | 70-75% | No | 0.050 |
| 6059086301 | 7474 | Orange | 92805 | Anaheim | -117.8962473 | 33.8327568 | 38.47 | 73.77 | 70-75% | No | 0.046 |
| 6067007503 | 4912 | Sacramento | 95841 | Sacramento | -121.3509892 | 38.6572651 | 38.46 | 73.75 | 70-75% | No | 0.051 |
| 6037119700 | 5045 | Los Angeles | 91402 | Panorama City | -118.4257669 | 34.2207731 | 38.45 | 73.74 | 70-75% | No | 0.055 |
| 6037131100 | 3252 | Los Angeles | 91406 | Van Nuys | -118.5056231 | 34.2146245 | 38.45 | 73.73 | 70-75% | No | 0.060 |
| 6065042621 | 6556 | Riverside | 92555 | Moreno Valley | -117.2002245 | 33.9319935 | 38.44 | 73.72 | 70-75% | No | 0.065 |
| 6037600501 | 2478 | Los Angeles | 90303 | Inglewood | -118.322075 | 33.9345627 | 38.44 | 73.70 | 70-75% | No | 0.044 |
| 6059075004 | 5245 | Orange | 92701 | Santa Ana | -117.8656949 | 33.7582622 | 38.43 | 73.69 | 70-75% | No | 0.046 |
| 6019004801 | 4604 | Fresno | 93704 | Fresno | -119.8120789 | 36.7842412 | 38.41 | 73.68 | 70-75% | No | 0.062 |
| 6077003216 | 2725 | San Joaquin | 95209 | Stockton | -121.3526635 | 38.0244365 | 38.40 | 73.67 | 70-75% | No | 0.046 |
| 6037600201 | 4600 | Los Angeles | 90044 | Los Angeles | -118.2972695 | 33.9482522 | 38.40 | 73.65 | 70-75% | No | 0.044 |
| 6059001303 | 5752 | Orange | 90631 | La Habra | -117.9511671 | 33.9209014 | 38.38 | 73.64 | 70-75% | No | 0.046 |
| 6073013103 | 2668 | San Diego | 91911 | Chula Vista | -117.0887814 | 32.6092325 | 38.32 | 73.63 | 70-75% | No | 0.038 |
| 6065043813 | 4340 | Riverside | 92220 | Banning | -116.8279566 | 33.9346407 | 38.31 | 73.62 | 70-75% | No | 0.068 |
| 6085501000 | 4769 | Santa Clara | 95112 | San Jose | -121.8880715 | 37.3416421 | 38.30 | 73.60 | 70-75% | No | 0.035 |
| 6083002502 | 7345 | Santa Barbara | 93455 | Santa Maria | -120.5815561 | 34.9168578 | 38.30 | 73.59 | 70-75% | No | 0.035 |
| 6037117201 | 4352 | Los Angeles | 91343 | North Hills | -118.4700895 | 34.2426724 | 38.29 | 73.58 | 70-75% | No | 0.057 |
| 6037221402 | 2715 | Los Angeles | 90018 | Los Angeles | -118.3090474 | 34.0384431 | 38.28 | 73.57 | 70-75% | No | 0.046 |
| 6065043317 | 8526 | Riverside | 92545 | Hemet | -117.018009 | 33.6989771 | 38.25 | 73.55 | 70-75% | No | 0.062 |
| 6037481606 | 4871 | Los Angeles | 91803 | Alhambra | -118.125985 | 34.0764499 | 38.25 | 73.54 | 70-75% | No | 0.048 |
| 6037408006 | 3863 | Los Angeles | 91792 | West Covina | -117.9014438 | 34.03455 | 38.25 | 73.53 | 70-75% | No | 0.053 |
| 6001438100 | 7675 | Alameda | 94544 | Hayward | -122.038949 | 37.6181516 | 38.23 | 73.51 | 70-75% | No | 0.035 |
| 6065042903 | 5738 | Riverside | 92570 | Perris | -117.3133054 | 33.8027798 | 38.21 | 73.50 | 70-75% | No | 0.062 |
| 6085503208 | 3985 | Santa Clara | 95111 | San Jose | -121.8160936 | 37.2807411 | 38.20 | 73.49 | 70-75% | No | 0.038 |
| 6037132300 | 6494 | Los Angeles | 91335 | Reseda | -118.5273253 | 34.1974433 | 38.19 | 73.48 | 70-75% | No | 0.060 |
| 6065040605 | 3543 | Riverside | 91752 | Mira Loma | -117.5140276 | 33.9962787 | 38.18 | 73.46 | 70-75% | No | 0.062 |
| 6001402800 | 3345 | Alameda | 94612 | Oakland | -122.2715003 | 37.8087183 | 38.17 | 73.45 | 70-75% | No | 0.030 |
| 6077001102 | 4889 | San Joaquin | 95204 | Stockton | -121.3254307 | 37.9675673 | 38.17 | 73.44 | 70-75% | No | 0.046 |
| 6037535502 | 4958 | Los Angeles | 90280 | South Gate | -118.2153163 | 33.961497 | 38.17 | 73.43 | 70-75% | No | 0.044 |
| 6047001200 | 5023 | Merced | 95340 | Merced | -120.4472741 | 37.3136674 | 38.16 | 73.41 | 70-75% | No | 0.057 |
| 6037920023 | 2598 | Los Angeles | 91351 | Canyon Country | -118.4919398 | 34.423464 | 38.14 | 73.40 | 70-75% | No | 0.065 |
| 6037104500 | 3293 | Los Angeles | 91331 | Pacoima | -118.4257479 | 34.2555108 | 38.13 | 73.39 | 70-75% | No | 0.057 |
| 6037481001 | 3842 | Los Angeles | 91801 | Alhambra | -118.1302887 | 34.0876622 | 38.13 | 73.38 | 70-75% | No | 0.050 |
| 6047001402 | 4277 | Merced | 95340 | Merced | -120.4432482 | 37.3030351 | 38.12 | 73.36 | 70-75% | No | 0.057 |
| 6037106112 | 5969 | Los Angeles | 91342 | Sylmar | -118.4124465 | 34.3054778 | 38.12 | 73.35 | 70-75% | No | 0.057 |
| 6037604001 | 4470 | Los Angeles | 90260 | Lawndale | -118.3568418 | 33.8837388 | 38.10 | 73.34 | 70-75% | No | 0.044 |
| 6073020500 | 5196 | San Diego | 92025 | Escondido | -117.0899733 | 33.1115032 | 38.10 | 73.33 | 70-75% | No | 0.048 |
| 6077005501 | 5268 | San Joaquin | 95304 | Tracy | -121.3122819 | 37.7017335 | 38.10 | 73.31 | 70-75% | No | 0.053 |
| 6037115104 | 4444 | Los Angeles | 91325 | Northridge | -118.5226461 | 34.2374909 | 38.09 | 73.30 | 70-75% | No | 0.057 |
| 6107000701 | 2635 | Tulare | 93286 | Woodlake | -119.0856162 | 36.3947015 | 38.08 | 73.29 | 70-75% | No | 0.062 |
| 6037217100 | 5374 | Los Angeles | 90019 | Los Angeles | -118.3545296 | 34.0489658 | 38.08 | 73.28 | 70-75% | No | 0.048 |
| 6037407502 | 3937 | Los Angeles | 91744 | La Puente | -117.9379348 | 34.0439866 | 38.08 | 73.26 | 70-75% | No | 0.051 |
| 6059074802 | 5845 | Orange | 92704 | Santa Ana | -117.8994228 | 33.7442595 | 38.07 | 73.25 | 70-75% | No | 0.046 |
| 6037104201 | 4780 | Los Angeles | 91340 | San Fernando | -118.4160998 | 34.2865005 | 38.07 | 73.24 | 70-75% | No | 0.057 |
| 6067007424 | 3508 | Sacramento | 95660 | North Highlands | -121.3667921 | 38.6646872 | 38.07 | 73.22 | 70-75% | No | 0.051 |
| 6107002601 | 4218 | Tulare | 93247 | Lindsay | -119.1045232 | 36.2136987 | 38.06 | 73.21 | 70-75% | No | 0.062 |
| 6085512604 | 4505 | Santa Clara | 95020 | Gilroy | -121.5705799 | 37.019822 | 38.05 | 73.20 | 70-75% | No | 0.040 |
| 6037236400 | 4113 | Los Angeles | 90008 | Los Angeles | -118.3512616 | 34.0067001 | 38.03 | 73.19 | 70-75% | No | 0.046 |
| 6055200301 | 5095 | Napa | 94559 | Napa | -122.2740455 | 38.287748 | 38.02 | 73.17 | 70-75% | No | 0.035 |
| 6037190301 | 4758 | Los Angeles | 90028 | Los Angeles | -118.315197 | 34.1037946 | 38.02 | 73.16 | 70-75% | No | 0.050 |
| 6059074601 | 8286 | Orange | 92707 | Santa Ana | -117.8712797 | 33.734324 | 38.02 | 73.15 | 70-75% | No | 0.046 |
| 6037310702 | 7104 | Los Angeles | 91502 | Burbank | -118.3067629 | 34.1811412 | 38.02 | 73.14 | 70-75% | No | 0.055 |
| 6037501200 | 5057 | Los Angeles | 90601 | Whittier | -118.0628298 | 33.9988447 | 38.01 | 73.12 | 70-75% | No | 0.046 |
| 6059088902 | 5143 | Orange | 92843 | Garden Grove | -117.9463184 | 33.7632139 | 38.00 | 73.11 | 70-75% | No | 0.046 |
| 6065042210 | 4761 | Riverside | 92507 | Riverside | -117.3350138 | 33.9895557 | 37.96 | 73.10 | 70-75% | No | 0.065 |
| 6037550601 | 5639 | Los Angeles | 90240 | Downey | -118.1171582 | 33.9622692 | 37.95 | 73.09 | 70-75% | No | 0.046 |
| 6073012401 | 3676 | San Diego | 91950 | National City | -117.0905516 | 32.6511008 | 37.94 | 73.07 | 70-75% | No | 0.040 |
| 6065031402 | 6518 | Riverside | 92504 | Riverside | -117.4200459 | 33.9417307 | 37.93 | 73.06 | 70-75% | No | 0.065 |
| 6067004300 | 9553 | Sacramento | 95832 | Sacramento | -121.4873526 | 38.4761513 | 37.93 | 73.05 | 70-75% | No | 0.048 |
| 6013369001 | 6246 | Contra Costa | 94806 | San Pablo | -122.3363969 | 37.9566485 | 37.91 | 73.04 | 70-75% | No | 0.030 |
| 6059075403 | 7081 | Orange | 92701 | Santa Ana | -117.8424353 | 33.7532867 | 37.91 | 73.02 | 70-75% | No | 0.048 |
| 6037552800 | 6401 | Los Angeles | 90650 | Norwalk | -118.091192 | 33.8984772 | 37.91 | 73.01 | 70-75% | No | 0.044 |
| 6037131300 | 4902 | Los Angeles | 91335 | Reseda | -118.5229633 | 34.2146599 | 37.90 | 73.00 | 70-75% | No | 0.060 |
| 6037183820 | 3464 | Los Angeles | 90042 | Los Angeles | -118.1971252 | 34.1039592 | 37.88 | 72.99 | 70-75% | No | 0.048 |
| 6037211410 | 3095 | Los Angeles | 90004 | Los Angeles | -118.3073155 | 34.0726142 | 37.87 | 72.97 | 70-75% | No | 0.048 |
| 6077005405 | 3417 | San Joaquin | 95376 | Tracy | -121.421163 | 37.7324326 | 37.83 | 72.96 | 70-75% | No | 0.053 |
| 6037134104 | 4322 | Los Angeles | 91306 | Winnetka | -118.5753847 | 34.2119534 | 37.83 | 72.95 | 70-75% | No | 0.057 |
| 6037430102 | 4809 | Los Angeles | 91010 | Duarte | -117.9799552 | 34.128623 | 37.83 | 72.93 | 70-75% | No | 0.053 |
| 6065031703 | 3611 | Riverside | 92503 | Riverside | -117.4379056 | 33.9098243 | 37.82 | 72.92 | 70-75% | No | 0.062 |
| 6037201602 | 2840 | Los Angeles | 90032 | Los Angeles | -118.1678921 | 34.07715 | 37.82 | 72.91 | 70-75% | No | 0.048 |
| 6029002817 | 5173 | Kern | 93309 | Bakersfield | -119.070111 | 35.3273754 | 37.81 | 72.90 | 70-75% | No | 0.065 |
| 6037212303 | 3326 | Los Angeles | 90005 | Los Angeles | -118.2935144 | 34.0597633 | 37.81 | 72.88 | 70-75% | No | 0.048 |
| 6069000400 | 5975 | San Benito | 95023 | Hollister | -121.4054324 | 36.847764 | 37.81 | 72.87 | 70-75% | No | 0.040 |
| 6037125200 | 3524 | Los Angeles | 91601 | North Hollywood | -118.3839912 | 34.1656901 | 37.80 | 72.86 | 70-75% | No | 0.053 |
| 6065040815 | 3586 | Riverside | 92879 | Corona | -117.5114997 | 33.8930776 | 37.79 | 72.85 | 70-75% | No | 0.062 |
| 6037482304 | 3556 | Los Angeles | 91770 | Rosemead | -118.0988908 | 34.0644299 | 37.78 | 72.83 | 70-75% | No | 0.048 |
| 6107002500 | 3778 | Tulare | 93247 | Lindsay | -119.1291061 | 36.2050995 | 37.77 | 72.82 | 70-75% | No | 0.062 |
| 6059086903 | 6861 | Orange | 92804 | Anaheim | -117.9890346 | 33.8247749 | 37.76 | 72.81 | 70-75% | No | 0.046 |
| 6037600202 | 6205 | Los Angeles | 90044 | Los Angeles | -118.2991423 | 33.9426036 | 37.74 | 72.80 | 70-75% | No | 0.044 |
| 6073015802 | 4673 | San Diego | 92020 | El Cajon | -116.9599184 | 32.7912947 | 37.74 | 72.78 | 70-75% | No | 0.046 |
| 6037135114 | 4445 | Los Angeles | 91303 | Canoga Park | -118.603662 | 34.1904438 | 37.74 | 72.77 | 70-75% | No | 0.057 |
| 6059099702 | 8182 | Orange | 92655 | Midway City | -117.9853704 | 33.7410623 | 37.74 | 72.76 | 70-75% | No | 0.044 |
| 6073012700 | 4955 | San Diego | 91910 | Chula Vista | -117.0851125 | 32.6341315 | 37.72 | 72.75 | 70-75% | No | 0.040 |
| 6059088602 | 4433 | Orange | 92843 | Garden Grove | -117.9350465 | 33.774216 | 37.72 | 72.73 | 70-75% | No | 0.046 |
| 6037480304 | 4098 | Los Angeles | 91801 | Alhambra | -118.1316021 | 34.0961677 | 37.71 | 72.72 | 70-75% | No | 0.050 |
| 6055200503 | 1769 | Napa | 94559 | Napa | -122.287051 | 38.3052531 | 37.66 | 72.71 | 70-75% | No | 0.035 |
| 6101050201 | 3249 | Sutter | 95991 | Yuba City | -121.628638 | 39.1341611 | 37.64 | 72.70 | 70-75% | No | 0.048 |
| 6013366001 | 4307 | Contra Costa | 94806 | San Pablo | -122.345993 | 37.9760806 | 37.63 | 72.68 | 70-75% | No | 0.030 |
| 6025011802 | 4870 | Imperial | 92243 | El Centro | -115.5741155 | 32.7833677 | 37.63 | 72.67 | 70-75% | No | 0.055 |
| 6037218701 | 2430 | Los Angeles | 90016 | Los Angeles | -118.3333058 | 34.0373889 | 37.63 | 72.66 | 70-75% | No | 0.048 |
| 6071011700 | 1768 | San Bernardino | 92307 | Apple Valley | -117.2159049 | 34.7138452 | 37.62 | 72.64 | 70-75% | No | 0.062 |
| 6037117407 | 3636 | Los Angeles | 91343 | North Hills | -118.4703117 | 34.2301059 | 37.61 | 72.63 | 70-75% | No | 0.057 |
| 6001407500 | 3931 | Alameda | 94621 | Oakland | -122.1976091 | 37.769515 | 37.59 | 72.62 | 70-75% | No | 0.030 |
| 6037320202 | 5797 | Los Angeles | 91340 | San Fernando | -118.4345092 | 34.2897466 | 37.58 | 72.61 | 70-75% | No | 0.057 |
| 6071002703 | 5780 | San Bernardino | 92377 | Rialto | -117.4255984 | 34.1650715 | 37.56 | 72.59 | 70-75% | No | 0.065 |
| 6037186302 | 5198 | Los Angeles | 90065 | Los Angeles | -118.228857 | 34.1126744 | 37.56 | 72.58 | 70-75% | No | 0.048 |
| 6047000202 | 1841 | Merced | 95315 | Delhi | -120.7903626 | 37.4123664 | 37.54 | 72.57 | 70-75% | No | 0.057 |
| 6107002003 | 5663 | Tulare | 93277 | Visalia | -119.3226585 | 36.3056613 | 37.53 | 72.56 | 70-75% | No | 0.060 |
| 6107002904 | 5002 | Tulare | 93274 | Tulare | -119.3214124 | 36.1899328 | 37.52 | 72.54 | 70-75% | No | 0.060 |
| 6085503121 | 4499 | Santa Clara | 95125 | San Jose | -121.8725149 | 37.3061692 | 37.51 | 72.53 | 70-75% | No | 0.038 |
| 6019008100 | 5691 | Fresno | 93210 | Coalinga | -120.3511651 | 36.1419667 | 37.50 | 72.52 | 70-75% | No | 0.053 |
| 6067006102 | 3114 | Sacramento | 95821 | Sacramento | -121.392239 | 38.6142373 | 37.48 | 72.51 | 70-75% | No | 0.051 |
| 6071001703 | 5979 | San Bernardino | 91710 | Chino | -117.659215 | 34.0247811 | 37.47 | 72.49 | 70-75% | No | 0.060 |
| 6037301204 | 4990 | Los Angeles | 91202 | Glendale | -118.2597444 | 34.161482 | 37.45 | 72.48 | 70-75% | No | 0.053 |
| 6085503710 | 3599 | Santa Clara | 95116 | San Jose | -121.8470155 | 37.3546903 | 37.44 | 72.47 | 70-75% | No | 0.038 |
| 6037402703 | 4686 | Los Angeles | 91767 | Pomona | -117.7253608 | 34.0780854 | 37.43 | 72.46 | 70-75% | No | 0.060 |
| 6037603101 | 4244 | Los Angeles | 90247 | Gardena | -118.2954546 | 33.8867825 | 37.43 | 72.44 | 70-75% | No | 0.044 |
| 6019001414 | 7381 | Fresno | 93727 | Fresno | -119.6909597 | 36.7182935 | 37.43 | 72.43 | 70-75% | No | 0.065 |
| 6019005602 | 5467 | Fresno | 93612 | Clovis | -119.7058337 | 36.8243809 | 37.42 | 72.42 | 70-75% | No | 0.065 |
| 6029006100 | 8264 | Kern | 93561 | Tehachapi | -118.4435603 | 35.1224846 | 37.41 | 72.41 | 70-75% | No | 0.065 |
| 6065042212 | 6727 | Riverside | 92557 | Moreno Valley | -117.2850572 | 33.9488742 | 37.40 | 72.39 | 70-75% | No | 0.065 |
| 6073014806 | 2577 | San Diego | 91942 | La Mesa | -117.0352057 | 32.7713036 | 37.40 | 72.38 | 70-75% | No | 0.042 |
| 6019005704 | 5542 | Fresno | 93612 | Clovis | -119.691083 | 36.8160111 | 37.39 | 72.37 | 70-75% | No | 0.065 |
| 6037481402 | 7175 | Los Angeles | 91776 | San Gabriel | -118.0929535 | 34.0830571 | 37.39 | 72.35 | 70-75% | No | 0.050 |
| 6067008801 | 4436 | Sacramento | 95655 | Mather | -121.2785982 | 38.5492278 | 37.38 | 72.34 | 70-75% | No | 0.051 |
| 6065042009 | 7119 | Riverside | 92508 | Riverside | -117.3150981 | 33.8604957 | 37.37 | 72.33 | 70-75% | No | 0.065 |
| 6013327000 | 6695 | Contra Costa | 94520 | Concord | -122.053206 | 37.9849793 | 37.36 | 72.32 | 70-75% | No | 0.038 |
| 6077005108 | 4463 | San Joaquin | 95336 | Manteca | -121.2222157 | 37.8041434 | 37.33 | 72.30 | 70-75% | No | 0.050 |
| 6037600802 | 2597 | Los Angeles | 90305 | Inglewood | -118.3367197 | 33.9661039 | 37.32 | 72.29 | 70-75% | No | 0.046 |
| 6071009904 | 10960 | San Bernardino | 92394 | Victorville | -117.3359 | 34.515479 | 37.31 | 72.28 | 70-75% | No | 0.065 |
| 6065042617 | 11436 | Riverside | 92571 | Perris | -117.2145613 | 33.8073433 | 37.30 | 72.27 | 70-75% | No | 0.065 |
| 6065040821 | 5691 | Riverside | 92879 | Corona | -117.528512 | 33.8910849 | 37.28 | 72.25 | 70-75% | No | 0.062 |
| 6037124102 | 3549 | Los Angeles | 91601 | North Hollywood | -118.3833988 | 34.1757824 | 37.26 | 72.24 | 70-75% | No | 0.053 |
| 6071002604 | 5723 | San Bernardino | 92337 | Fontana | -117.4928732 | 34.0358648 | 37.26 | 72.23 | 70-75% | No | 0.065 |
| 6037572202 | 3609 | Los Angeles | 90806 | Long Beach | -118.1953401 | 33.8089196 | 37.26 | 72.22 | 70-75% | No | 0.042 |
| 6001428000 | 2928 | Alameda | 94501 | Alameda | -122.2475404 | 37.7666414 | 37.26 | 72.20 | 70-75% | No | 0.030 |

| | | | | | | | | | | | | |
|---|---|---|---|---|---|---|---|---|---|---|---|---|
| 6067004903 | 6740 | Sacramento | 95823 | Sacramento | -121.4621788 | 38.4886484 | 37.25 | 72.18 | 70-75% | No | 0.048 | 60.88 |
| 6007003001 | 3140 | Butte | 95966 | Oroville | -121.5403556 | 39.4956403 | 37.23 | 72.17 | 70-75% | No | 0.051 | 69.23 |
| 6077003410 | 5778 | San Joaquin | 95210 | Stockton | -121.2878243 | 38.014821 | 37.23 | 72.15 | 70-75% | No | 0.048 | 60.88 |
| 6037120107 | 3818 | Los Angeles | 91402 | Panorama City | -118.4563804 | 34.226419 | 37.22 | 72.14 | 70-75% | No | 0.057 | 82.10 |
| 6037576502 | 4543 | Los Angeles | 90802 | Long Beach | -118.1740906 | 33.771918 | 37.21 | 72.13 | 70-75% | No | 0.042 | 31.84 |
| 6067003101 | 3568 | Sacramento | 95820 | Sacramento | -121.4185883 | 38.5285812 | 37.21 | 72.12 | 70-75% | No | 0.048 | 60.88 |
| 6067005601 | 4822 | Sacramento | 95825 | Sacramento | -121.3922482 | 38.6031948 | 37.20 | 72.10 | 70-75% | No | 0.051 | 69.23 |
| 6037132001 | 3202 | Los Angeles | 91406 | Van Nuys | -118.514195 | 34.1920691 | 37.19 | 72.09 | 70-75% | No | 0.060 | 85.21 |
| 6019004901 | 4052 | Fresno | 93704 | Fresno | -119.7964425 | 36.7867587 | 37.19 | 72.08 | 70-75% | No | 0.062 | 91.10 |
| 6037482502 | 3373 | Los Angeles | 91770 | Rosemead | -118.1037641 | 34.0589818 | 37.18 | 72.06 | 70-75% | No | 0.048 | 60.88 |
| 6077003112 | 2974 | San Joaquin | 95207 | Stockton | -121.3395677 | 37.9919111 | 37.16 | 72.05 | 70-75% | No | 0.046 | 53.02 |
| 6077004501 | 2327 | San Joaquin | 95240 | Lodi | -121.2583284 | 38.1434699 | 37.15 | 72.04 | 70-75% | No | 0.048 | 60.88 |
| 6071003403 | 4524 | San Bernardino | 92316 | Bloomington | -117.4081152 | 34.0837281 | 37.15 | 72.03 | 70-75% | No | 0.065 | 98.18 |
| 6037216700 | 3709 | Los Angeles | 90035 | Los Angeles | -118.371949 | 34.0482451 | 37.14 | 72.01 | 70-75% | No | 0.048 | 60.88 |
| 6075012501 | 5335 | San Francisco | 94102 | San Francisco | -122.4109765 | 37.783016 | 37.14 | 72.00 | 70-75% | No | 0.030 | 7.58 |
| 6099003605 | 8007 | Stanislaus | 95382 | Turlock | -120.856378 | 37.525656 | 37.12 | 71.99 | 70-75% | No | 0.057 | 82.10 |
| 6037125501 | 3077 | Los Angeles | 91601 | North Hollywood | -118.3657855 | 34.1622937 | 37.11 | 71.98 | 70-75% | No | 0.053 | 73.93 |
| 6059087300 | 10413 | Orange | 92805 | Anaheim | -117.9110844 | 33.8361368 | 37.11 | 71.96 | 70-75% | No | 0.046 | 53.02 |
| 6099003001 | 9397 | Stanislaus | 95307 | Ceres | -120.9179827 | 37.6018409 | 37.10 | 71.95 | 70-75% | No | 0.055 | 77.87 |
| 6039000300 | 8213 | Madera | 93610 | Chowchilla | -120.2587546 | 37.1133445 | 37.10 | 71.94 | 70-75% | No | 0.060 | 85.21 |
| 6059086304 | 4847 | Orange | 92806 | Anaheim | -117.8790975 | 33.8354916 | 37.10 | 71.93 | 70-75% | No | 0.046 | 53.02 |
| 6025011000 | 12047 | Imperial | 92251 | Imperial | -115.557135 | 32.8655904 | 37.09 | 71.91 | 70-75% | No | 0.053 | 73.93 |
| 6019003103 | 5708 | Fresno | 93612 | Clovis | -119.7203949 | 36.7976616 | 37.08 | 71.90 | 70-75% | No | 0.065 | 98.18 |
| 6071011800 | 7000 | San Bernardino | 92311 | Barstow | -117.1213732 | 34.8338041 | 37.08 | 71.89 | 70-75% | No | 0.060 | 85.21 |
| 6059074109 | 3801 | Orange | 92704 | Santa Ana | -117.8986838 | 33.721106 | 37.08 | 71.88 | 70-75% | No | 0.046 | 53.02 |
| 6071001905 | 6389 | San Bernardino | 91761 | Ontario | -117.6258794 | 34.0085229 | 37.08 | 71.86 | 70-75% | No | 0.062 | 91.10 |
| 6071000604 | 5682 | San Bernardino | 91710 | Chino | -117.6828193 | 34.0227451 | 37.07 | 71.85 | 70-75% | No | 0.060 | 85.21 |
| 6037482301 | 5162 | Los Angeles | 91776 | San Gabriel | -118.0990697 | 34.0741046 | 37.07 | 71.84 | 70-75% | No | 0.050 | 64.80 |
| 6019003600 | 4009 | Fresno | 93704 | Fresno | -119.8108607 | 36.7721367 | 37.06 | 71.82 | 70-75% | No | 0.062 | 91.10 |
| 6037267300 | 3680 | Los Angeles | 90025 | Los Angeles | -118.4496946 | 34.045202 | 37.06 | 71.81 | 70-75% | No | 0.046 | 53.02 |
| 6107004400 | 7470 | Tulare | 93219 | Earlimart | -119.265395 | 35.8758839 | 37.04 | 71.80 | 70-75% | No | 0.062 | 91.10 |
| 6013306004 | 3324 | Contra Costa | 94509 | Antioch | -121.7845356 | 38.0085744 | 37.02 | 71.79 | 70-75% | No | 0.042 | 31.84 |
| 6025010900 | 6755 | Imperial | 92250 | Holtville | -115.3745809 | 32.8156455 | 37.00 | 71.77 | 70-75% | No | 0.053 | 73.93 |
| 6071008705 | 4617 | San Bernardino | 92399 | Yucaipa | -117.0937231 | 34.0278349 | 36.99 | 71.76 | 70-75% | No | 0.068 | 100.00 |
| 6037183610 | 3275 | Los Angeles | 90042 | Los Angeles | -118.1948974 | 34.1140024 | 36.99 | 71.75 | 70-75% | No | 0.050 | 64.80 |
| 6085502002 | 4887 | Santa Clara | 95126 | San Jose | -121.9208804 | 37.3194479 | 36.96 | 71.74 | 70-75% | No | 0.038 | 22.34 |
| 6037577000 | 6995 | Los Angeles | 90804 | Long Beach | -118.1401379 | 33.776873 | 36.96 | 71.72 | 70-75% | No | 0.042 | 31.84 |
| 6037115401 | 5776 | Los Angeles | 91325 | Northridge | -118.515127 | 34.2248079 | 36.95 | 71.71 | 70-75% | No | 0.060 | 85.21 |
| 6067005509 | 1910 | Sacramento | 95825 | Sacramento | -121.4130197 | 38.5852419 | 36.94 | 71.70 | 70-75% | No | 0.050 | 64.80 |
| 6037576501 | 3369 | Los Angeles | 90802 | Long Beach | -118.1787306 | 33.772239 | 36.94 | 71.69 | 70-75% | No | 0.042 | 31.84 |
| 6037293201 | 6629 | Los Angeles | 90501 | Torrance | -118.30513 | 33.8308864 | 36.92 | 71.67 | 70-75% | No | 0.042 | 31.84 |
| 6037234502 | 2698 | Los Angeles | 90043 | Los Angeles | -118.3244227 | 34.0018666 | 36.92 | 71.66 | 70-75% | No | 0.046 | 53.02 |
| 6071000401 | 6387 | San Bernardino | 91710 | Chino | -117.723699 | 34.0151297 | 36.91 | 71.65 | 70-75% | No | 0.057 | 82.10 |
| 6037106114 | 5880 | Los Angeles | 91340 | San Fernando | -118.4268073 | 34.3023558 | 36.91 | 71.64 | 70-75% | No | 0.057 | 82.10 |
| 6037201504 | 2428 | Los Angeles | 90032 | Los Angeles | -118.173792 | 34.080828 | 36.89 | 71.62 | 70-75% | No | 0.048 | 60.88 |
| 6037543304 | 6061 | Los Angeles | 90746 | Carson | -118.2413562 | 33.8522481 | 36.88 | 71.61 | 70-75% | No | 0.042 | 31.84 |
| 6065043310 | 3120 | Riverside | 92544 | Hemet | -116.9363867 | 33.7452198 | 36.88 | 71.60 | 70-75% | No | 0.065 | 98.18 |
| 6037123602 | 3332 | Los Angeles | 91401 | Van Nuys | -118.4263255 | 34.1812199 | 36.87 | 71.59 | 70-75% | No | 0.055 | 77.87 |
| 6071004507 | 5042 | San Bernardino | 92407 | San Bernardino | -117.3017356 | 34.168967 | 36.86 | 71.57 | 70-75% | No | 0.068 | 100.00 |
| 6067004905 | 6649 | Sacramento | 95823 | Sacramento | -121.4391674 | 38.4777448 | 36.86 | 71.56 | 70-75% | No | 0.048 | 60.88 |
| 6071005100 | 7749 | San Bernardino | 92404 | San Bernardino | -117.2805874 | 34.1575897 | 36.85 | 71.55 | 70-75% | No | 0.068 | 100.00 |
| 6071002706 | 6654 | San Bernardino | 92407 | San Bernardino | -117.3899458 | 34.1801741 | 36.84 | 71.53 | 70-75% | No | 0.068 | 100.00 |
| 6103001100 | 7523 | Tehama | 96021 | Corning | -122.2210805 | 39.8868917 | 36.83 | 71.52 | 70-75% | No | 0.050 | 64.80 |
| 6099000908 | 5093 | Stanislaus | 95355 | Modesto | -120.9635795 | 37.6841105 | 36.83 | 71.51 | 70-75% | No | 0.053 | 73.93 |
| 6037139504 | 3476 | Los Angeles | 91316 | Encino | -118.5202503 | 34.1670182 | 36.83 | 71.50 | 70-75% | No | 0.057 | 82.10 |
| 6065045605 | 10543 | Riverside | 92274 | Thermal | -116.1437183 | 33.5349272 | 36.82 | 71.48 | 70-75% | No | 0.062 | 91.10 |
| 6037209510 | 2692 | Los Angeles | 90006 | Los Angeles | -118.2819584 | 34.0529626 | 36.82 | 71.47 | 70-75% | No | 0.046 | 53.02 |
| 6013303103 | 10812 | Contra Costa | 94513 | Brentwood | -121.6710171 | 37.9362987 | 36.82 | 71.46 | 70-75% | No | 0.044 | 40.49 |
| 6065042618 | 8283 | Riverside | 92571 | Perris | -117.2187833 | 33.8217106 | 36.82 | 71.45 | 70-75% | No | 0.065 | 98.18 |
| 6037211922 | 3389 | Los Angeles | 90020 | Los Angeles | -118.2953981 | 34.0672221 | 36.81 | 71.43 | 70-75% | No | 0.048 | 60.88 |
| 6037553503 | 2768 | Los Angeles | 90723 | Paramount | -118.1541186 | 33.9130459 | 36.81 | 71.42 | 70-75% | No | 0.044 | 40.49 |
| 6073018509 | 4968 | San Diego | 92054 | Oceanside | -117.3606844 | 33.1995448 | 36.80 | 71.41 | 70-75% | No | 0.042 | 31.84 |
| 6067004904 | 5675 | Sacramento | 95823 | Sacramento | -121.4464627 | 38.4880638 | 36.79 | 71.40 | 70-75% | No | 0.048 | 60.88 |
| 6081600100 | 4854 | San Mateo | 94005 | Brisbane | -122.4084093 | 37.6877413 | 36.77 | 71.38 | 70-75% | No | 0.030 | 7.58 |
| 6067004402 | 4252 | Sacramento | 95820 | Sacramento | -121.4602788 | 38.532368 | 36.76 | 71.37 | 70-75% | No | 0.048 | 60.88 |
| 6037400602 | 4719 | Los Angeles | 91702 | Azusa | -117.9091006 | 34.1381275 | 36.75 | 71.36 | 70-75% | No | 0.055 | 77.87 |
| 6037503106 | 3795 | Los Angeles | 90604 | Whittier | -118.0236715 | 33.9207603 | 36.72 | 71.35 | 70-75% | No | 0.046 | 53.02 |
| 6071000404 | 4419 | San Bernardino | 91710 | Chino | -117.6905171 | 34.0410264 | 36.71 | 71.33 | 70-75% | No | 0.060 | 85.21 |
| 6071003801 | 4735 | San Bernardino | 92376 | Rialto | -117.3640967 | 34.1284219 | 36.70 | 71.32 | 70-75% | No | 0.065 | 98.18 |
| 6037402001 | 3080 | Los Angeles | 91711 | Claremont | -117.7241769 | 34.0879928 | 36.70 | 71.31 | 70-75% | No | 0.060 | 85.21 |
| 6037131400 | 5897 | Los Angeles | 91335 | Reseda | -118.5316957 | 34.2145917 | 36.70 | 71.30 | 70-75% | No | 0.060 | 85.21 |
| 6001401300 | 3528 | Alameda | 94609 | Oakland | -122.2667133 | 37.8180997 | 36.69 | 71.28 | 70-75% | No | 0.030 | 7.58 |
| 6037117530 | 5641 | Los Angeles | 91343 | North Hills | -118.4643776 | 34.2264373 | 36.69 | 71.27 | 70-75% | No | 0.057 | 82.10 |
| 6111006100 | 8378 | Ventura | 91320 | Newbury Park | -118.9295149 | 34.1984453 | 36.68 | 71.26 | 70-75% | No | 0.048 | 60.88 |
| 6059099701 | 6171 | Orange | 92655 | Midway City | -117.9852856 | 33.7483608 | 36.67 | 71.24 | 70-75% | No | 0.044 | 40.49 |
| 6067006500 | 6637 | Sacramento | 95838 | Sacramento | -121.4385656 | 38.6441696 | 36.67 | 71.23 | 70-75% | No | 0.050 | 64.80 |
| 6007001200 | 3556 | Butte | 95928 | Chico | -121.8142432 | 39.6982253 | 36.67 | 71.22 | 70-75% | No | 0.048 | 60.88 |
| 6073010111 | 3072 | San Diego | 92173 | San Ysidro | -117.0662396 | 32.5641819 | 36.66 | 71.21 | 70-75% | No | 0.035 | 16.94 |
| 6081601300 | 7510 | San Mateo | 94014 | Daly City | -122.4654837 | 37.6878686 | 36.66 | 71.19 | 70-75% | No | 0.030 | 7.58 |
| 6037208904 | 3926 | Los Angeles | 90057 | Los Angeles | -118.2700929 | 34.0595681 | 36.66 | 71.18 | 70-75% | No | 0.046 | 53.02 |
| 6097153104 | 4046 | Sonoma | 95407 | Santa Rosa | -122.7274638 | 38.4288774 | 36.66 | 71.17 | 70-75% | No | 0.030 | 7.58 |
| 6067005402 | 2641 | Sacramento | 95815 | Sacramento | -121.4317532 | 38.5897947 | 36.65 | 71.16 | 70-75% | No | 0.050 | 64.80 |
| 6071009905 | 7575 | San Bernardino | 92394 | Victorville | -117.3099848 | 34.5507774 | 36.64 | 71.14 | 70-75% | No | 0.065 | 98.18 |
| 6037503202 | 4462 | Los Angeles | 90604 | Whittier | -118.0348881 | 33.9393795 | 36.64 | 71.13 | 70-75% | No | 0.046 | 53.02 |
| 6071010013 | 8022 | San Bernardino | 92345 | Hesperia | -117.2673851 | 34.428542 | 36.63 | 71.12 | 70-75% | No | 0.065 | 98.18 |
| 6037403318 | 6243 | Los Angeles | 91766 | Pomona | -117.7652744 | 34.0305561 | 36.63 | 71.11 | 70-75% | No | 0.057 | 82.10 |
| 6059075515 | 15295 | Orange | 92782 | Tustin | -117.8352245 | 33.7049422 | 36.62 | 71.09 | 70-75% | No | 0.046 | 53.02 |
| 6025012002 | 9678 | Imperial | 92231 | Calexico | -115.4776657 | 32.6773547 | 36.62 | 71.08 | 70-75% | No | 0.053 | 73.93 |
| 6059074005 | 7432 | Orange | 92707 | Santa Ana | -117.8809246 | 33.7088171 | 36.62 | 71.07 | 70-75% | No | 0.046 | 53.02 |
| 6013355200 | 7444 | Contra Costa | 94521 | Concord | -121.9764323 | 37.9987014 | 36.61 | 71.06 | 70-75% | No | 0.038 | 22.34 |
| 6065030800 | 6973 | Riverside | 92504 | Riverside | -117.4115769 | 33.9653835 | 36.60 | 71.04 | 70-75% | No | 0.065 | 98.18 |
| 6001436200 | 3827 | Alameda | 94541 | Hayward | -122.11212 | 37.6685048 | 36.58 | 71.03 | 70-75% | No | 0.033 | 11.08 |
| 6037406902 | 3149 | Los Angeles | 91746 | La Puente | -117.9641181 | 34.0564404 | 36.58 | 71.02 | 70-75% | No | 0.051 | 69.23 |
| 6053001801 | 3957 | Monterey | 93907 | Salinas | -121.6700057 | 36.6893565 | 36.58 | 71.01 | 70-75% | No | 0.033 | 11.08 |
| 6067007504 | 2054 | Sacramento | 95841 | Sacramento | -121.361362 | 38.6476255 | 36.57 | 70.99 | 70-75% | No | 0.051 | 69.23 |
| 6001406202 | 4718 | Alameda | 94601 | Oakland | -122.2265557 | 37.7819786 | 36.57 | 70.98 | 70-75% | No | 0.030 | 7.58 |
| 6059099801 | 5816 | Orange | 92683 | Westminster | -117.9906948 | 33.765726 | 36.57 | 70.97 | 70-75% | No | 0.044 | 40.49 |
| 6037482503 | 4357 | Los Angeles | 91770 | Rosemead | -118.0948587 | 34.0586251 | 36.57 | 70.95 | 70-75% | No | 0.048 | 60.88 |
| 6007002800 | 4275 | Butte | 95965 | Oroville | -121.5606959 | 39.5071861 | 36.57 | 70.94 | 70-75% | No | 0.051 | 69.23 |
| 6071002601 | 10799 | San Bernardino | 92337 | Fontana | -117.4505924 | 34.0547059 | 36.56 | 70.93 | 70-75% | No | 0.065 | 98.18 |
| 6077003310 | 4191 | San Joaquin | 95210 | Stockton | -121.3141008 | 38.0245526 | 36.56 | 70.92 | 70-75% | No | 0.046 | 53.02 |
| 6037134002 | 3372 | Los Angeles | 91306 | Winnetka | -118.5855271 | 34.2026924 | 36.56 | 70.90 | 70-75% | No | 0.057 | 82.10 |
| 6037602402 | 6769 | Los Angeles | 90250 | Hawthorne | -118.3568525 | 33.9091622 | 36.55 | 70.89 | 70-75% | No | 0.044 | 40.49 |
| 6107002303 | 6447 | Tulare | 93274 | Tulare | -119.3438407 | 36.2256444 | 36.55 | 70.88 | 70-75% | No | 0.060 | 85.21 |
| 6099000501 | 7165 | Stanislaus | 95356 | Modesto | -121.0456931 | 37.7204067 | 36.54 | 70.87 | 70-75% | No | 0.053 | 73.93 |
| 6037576904 | 3288 | Los Angeles | 90804 | Long Beach | -118.157318 | 33.7771513 | 36.52 | 70.85 | 70-75% | No | 0.042 | 31.84 |
| 6053001700 | 3780 | Monterey | 93901 | Salinas | -121.6686664 | 36.6783432 | 36.52 | 70.84 | 70-75% | No | 0.033 | 11.08 |
| 6037481002 | 5447 | Los Angeles | 91801 | Alhambra | -118.1189741 | 34.0951879 | 36.52 | 70.83 | 70-75% | No | 0.050 | 64.80 |
| 6059001903 | 3418 | Orange | 92833 | Fullerton | -117.958868 | 33.8567264 | 36.50 | 70.82 | 70-75% | No | 0.046 | 53.02 |
| 6037128101 | 3738 | Los Angeles | 91405 | Van Nuys | -118.4356174 | 34.1902993 | 36.49 | 70.80 | 70-75% | No | 0.055 | 77.87 |
| 6067006003 | 4461 | Sacramento | 95821 | Sacramento | -121.37517 | 38.6342017 | 36.49 | 70.79 | 70-75% | No | 0.051 | 69.23 |
| 6059086803 | 7478 | Orange | 92801 | Anaheim | -117.9806013 | 33.8358485 | 36.48 | 70.78 | 70-75% | No | 0.046 | 53.02 |
| 6037127712 | 2991 | Los Angeles | 91406 | Van Nuys | -118.4700785 | 34.1974208 | 36.48 | 70.77 | 70-75% | No | 0.057 | 82.10 |
| 6037104105 | 5412 | Los Angeles | 91331 | Pacoima | -118.4046862 | 34.2761482 | 36.48 | 70.75 | 70-75% | No | 0.055 | 77.87 |
| 6059001103 | 4489 | Orange | 90631 | La Habra | -117.9615275 | 33.9346776 | 36.47 | 70.74 | 70-75% | No | 0.046 | 53.02 |
| 6107003802 | 4123 | Tulare | 93257 | Porterville | -119.0166966 | 36.070899 | 36.45 | 70.73 | 70-75% | No | 0.065 | 98.18 |
| 6025010800 | 1368 | Imperial | 92250 | Holtville | -115.317678 | 32.7712275 | 36.44 | 70.72 | 70-75% | No | 0.053 | 73.93 |
| 6107001902 | 4016 | Tulare | 93277 | Visalia | -119.2990915 | 36.302965 | 36.43 | 70.70 | 70-75% | No | 0.060 | 85.21 |
| 6065040603 | 2376 | Riverside | 91752 | Mira Loma | -117.526465 | 33.9705168 | 36.43 | 70.69 | 70-75% | No | 0.062 | 91.10 |
| 6037543603 | 3690 | Los Angeles | 90710 | Harbor City | -118.2937974 | 33.8044726 | 36.42 | 70.68 | 70-75% | No | 0.042 | 31.84 |
| 6037211703 | 4750 | Los Angeles | 90020 | Los Angeles | -118.311582 | 34.0671467 | 36.41 | 70.66 | 70-75% | No | 0.048 | 60.88 |
| 6037183220 | 4114 | Los Angeles | 90042 | Los Angeles | -118.1892861 | 34.1199723 | 36.41 | 70.65 | 70-75% | No | 0.050 | 64.80 |
| 6001432600 | 6842 | Alameda | 94577 | San Leandro | -122.1551539 | 37.7226922 | 36.40 | 70.64 | 70-75% | No | 0.030 | 7.58 |
| 6077003404 | 5842 | San Joaquin | 95210 | Stockton | -121.287041 | 38.0327016 | 36.40 | 70.63 | 70-75% | No | 0.048 | 60.88 |
| 6029006007 | 5474 | Kern | 93560 | Rosamond | -118.5950157 | 34.9750857 | 36.40 | 70.61 | 70-75% | No | 0.065 | 98.18 |
| 6065046800 | 6365 | Riverside | 92553 | Moreno Valley | -117.2132757 | 33.9283078 | 36.39 | 70.60 | 70-75% | No | 0.065 | 98.18 |
| 6037503103 | 5004 | Los Angeles | 90605 | Whittier | -118.0407064 | 33.9281744 | 36.39 | 70.59 | 70-75% | No | 0.046 | 53.02 |
| 6071003603 | 4141 | San Bernardino | 92376 | Rialto | -117.39214 | 34.0886323 | 36.38 | 70.58 | 70-75% | No | 0.065 | 98.18 |
| 6019006000 | 8895 | Fresno | 93657 | Sanger | -119.5717189 | 36.7191064 | 36.38 | 70.56 | 70-75% | No | 0.065 | 98.18 |
| 6107003602 | 7114 | Tulare | 93257 | Porterville | -119.0478137 | 36.0667198 | 36.38 | 70.55 | 70-75% | No | 0.065 | 98.18 |
| 6067005506 | 3066 | Sacramento | 95825 | Sacramento | -121.4107461 | 38.5926289 | 36.37 | 70.54 | 70-75% | No | 0.050 | 64.80 |
| 6037550901 | 3762 | Los Angeles | 90241 | Downey | -118.1289738 | 33.9420607 | 36.36 | 70.53 | 70-75% | No | 0.046 | 53.02 |
| 6111004400 | 7251 | Ventura | 93041 | Port Hueneme | -119.1940323 | 34.145655 | 36.35 | 70.51 | 70-75% | No | 0.044 | 40.49 |
| 6073010005 | 7366 | San Diego | 92173 | San Ysidro | -117.0496159 | 32.5641527 | 36.34 | 70.50 | 70-75% | No | 0.035 | 16.94 |
| 6037123520 | 2567 | Los Angeles | 91401 | Van Nuys | -118.423608 | 34.1884912 | 36.33 | 70.49 | 70-75% | No | 0.055 | 77.87 |
| 6059076208 | 4999 | Orange | 92865 | Orange | -117.8434316 | 33.8225982 | 36.32 | 70.48 | 70-75% | No | 0.048 | 60.88 |
| 6029000506 | 2795 | Kern | 93308 | Bakersfield | -119.0832776 | 35.3924388 | 36.31 | 70.46 | 70-75% | No | 0.062 | 91.10 |
| 6071010012 | 4877 | San Bernardino | 92345 | Hesperia | -117.2683614 | 34.4540611 | 36.31 | 70.45 | 70-75% | No | 0.065 | 98.18 |
| 6037218220 | 4358 | Los Angeles | 90019 | Los Angeles | -118.3348919 | 34.0434012 | 36.31 | 70.44 | 70-75% | No | 0.048 | 60.88 |
| 6065031100 | 4584 | Riverside | 92506 | Riverside | -117.3909919 | 33.9549035 | 36.29 | 70.43 | 70-75% | No | 0.065 | 98.18 |
| 6065043505 | 2911 | Riverside | 92545 | Hemet | -116.9935262 | 33.7583074 | 36.28 | 70.41 | 70-75% | No | 0.062 | 91.10 |
| 6065043504 | 7743 | Riverside | 92545 | Hemet | -117.0203384 | 33.7539134 | 36.26 | 70.40 | 70-75% | No | 0.062 | 91.10 |
| 6037119202 | 4707 | Los Angeles | 91331 | Pacoima | -118.4424803 | 34.2547197 | 36.24 | 70.39 | 70-75% | No | 0.057 | 82.10 |
| 6019003810 | 5256 | Fresno | 93722 | Fresno | -119.8893898 | 36.7936161 | 36.22 | 70.37 | 70-75% | No | 0.060 | 85.21 |
| 6037554201 | 4108 | Los Angeles | 90706 | Bellflower | -118.1382741 | 33.8838461 | 36.22 | 70.36 | 70-75% | No | 0.044 | 40.49 |
| 6037482800 | 4074 | Los Angeles | 91755 | Monterey Park | -118.1149064 | 34.0369447 | 36.21 | 70.35 | 70-75% | No | 0.048 | 60.88 |
| 6037117510 | 4028 | Los Angeles | 91343 | North Hills | -118.4621485 | 34.233678 | 36.20 | 70.34 | 70-75% | No | 0.057 | 82.10 |
| 6037408402 | 5799 | Los Angeles | 91745 | Hacienda Heights | -118.0024823 | 34.0145909 | 36.20 | 70.32 | 70-75% | No | 0.048 | 60.88 |
| 6037481202 | 6608 | Los Angeles | 91776 | San Gabriel | -118.0815165 | 34.0980685 | 36.20 | 70.31 | 70-75% | No | 0.050 | 64.80 |
| 6065042206 | 5620 | Riverside | 92507 | Riverside | -117.3297749 | 33.9590764 | 36.18 | 70.30 | 70-75% | No | 0.065 | 98.18 |
| 6107000800 | 7416 | Tulare | 93292 | Visalia | -119.2108517 | 36.4202175 | 36.18 | 70.29 | 70-75% | No | 0.060 | 85.21 |
| 6071002103 | 4646 | San Bernardino | 91730 | Rancho Cucamonga | -117.6080465 | 34.1030228 | 36.18 | 70.27 | 70-75% | No | 0.065 | 98.18 |
| 6067006701 | 8370 | Sacramento | 95838 | Sacramento | -121.460413 | 38.6484319 | 36.17 | 70.26 | 70-75% | No | 0.048 | 60.88 |
| 6069000300 | 4217 | San Benito | 95023 | Hollister | -121.4226918 | 36.8617345 | 36.15 | 70.25 | 70-75% | No | 0.040 | 25.87 |
| 6037275603 | 2711 | Los Angeles | 90230 | Culver City | -118.4066251 | 33.9864759 | 36.14 | 70.24 | 70-75% | No | 0.046 | 53.02 |
| 6065040809 | 3353 | Riverside | 92879 | Corona | -117.5555915 | 33.8928291 | 36.14 | 70.22 | 70-75% | No | 0.060 | 85.21 |
| 6001423200 | 2794 | Alameda | 94710 | Berkeley | -122.2936857 | 37.8645164 | 36.09 | 70.21 | 70-75% | No | 0.030 | 7.58 |
| 6019007801 | 2722 | Fresno | 93234 | Huron | -120.0943201 | 36.1460009 | 36.09 | 70.20 | 70-75% | No | 0.060 | 85.21 |
| 6057000501 | 6034 | Nevada | 95945 | Grass Valley | -121.0671814 | 39.2334936 | 36.09 | 70.19 | 70-75% | No | 0.057 | 82.10 |
| 6071002037 | 7739 | San Bernardino | 92336 | Fontana | -117.5015528 | 34.1223865 | 36.08 | 70.17 | 70-75% | No | 0.065 | 98.18 |
| 6065045609 | 5880 | Riverside | 92274 | Thermal | -116.1520684 | 33.6448 | 36.08 | 70.16 | 70-75% | No | 0.062 | 91.10 |
| 6037207101 | 3047 | Los Angeles | 90012 | Los Angeles | -118.2448177 | 34.0612027 | 36.08 | 70.15 | 70-75% | No | 0.046 | 53.02 |
| 6037402705 | 3328 | Los Angeles | 91767 | Pomona | -117.7311684 | 34.071705 | 36.08 | 70.13 | 70-75% | No | 0.057 | 82.10 |
| 6071003405 | 5109 | San Bernardino | 92335 | Fontana | -117.4055556 | 34.0975427 | 36.07 | 70.12 | 70-75% | No | 0.065 | 98.18 |
| 6097153002 | 6827 | Sonoma | 95401 | Santa Rosa | -122.7327641 | 38.4410975 | 36.07 | 70.11 | 70-75% | No | 0.030 | 7.58 |
| 6019004100 | 3306 | Fresno | 93723 | Fresno | -119.9948664 | 36.795996 | 36.06 | 70.10 | 70-75% | No | 0.060 | 85.21 |
| 6001436900 | 6724 | Alameda | 94541 | Hayward | -122.1097202 | 37.6603503 | 36.05 | 70.08 | 70-75% | No | 0.033 | 11.08 |
| 6037104124 | 4175 | Los Angeles | 91342 | Sylmar | -118.373946 | 34.2902413 | 36.04 | 70.07 | 70-75% | No | 0.055 | 77.87 |
| 6037201301 | 3442 | Los Angeles | 90032 | Los Angeles | -118.1878082 | 34.0882239 | 36.03 | 70.06 | 70-75% | No | 0.048 | 60.88 |
| 6037502801 | 6186 | Los Angeles | 90670 | Santa Fe Springs | -118.0891681 | 33.9409904 | 36.03 | 70.05 | 70-75% | No | 0.046 | 53.02 |
| 6053010504 | 4732 | Monterey | 93907 | Salinas | -121.6959506 | 36.7324097 | 36.03 | 70.03 | 70-75% | No | 0.033 | 11.08 |
| 6037128910 | 4083 | Los Angeles | 91403 | Sherman Oaks | -118.4585185 | 34.1616765 | 36.01 | 70.02 | 70-75% | No | 0.053 | 73.93 |
| 6037401704 | 5828 | Los Angeles | 91767 | Pomona | -117.7430957 | 34.1006379 | 36.00 | 70.01 | 70-75% | No | 0.060 | 85.21 |
| 6071010026 | 10495 | San Bernardino | 92395 | Victorville | -117.2949039 | 34.485449 | 35.99 | 70.00 | 65-70% | No | 0.065 | 98.18 |
| 6037551202 | 7666 | Los Angeles | 90242 | Downey | -118.1381271 | 33.924571 | 35.99 | 69.98 | 65-70% | No | 0.044 | 40.49 |
| 6099000506 | 4295 | Stanislaus | 95356 | Modesto | -121.0036408 | 37.7001655 | 35.99 | 69.97 | 65-70% | No | 0.053 | 73.93 |
| 6037113401 | 5543 | Los Angeles | 91306 | Winnetka | -118.5626938 | 34.2272273 | 35.99 | 69.96 | 65-70% | No | 0.060 | 85.21 |
| 6047002301 | 6680 | Merced | 93635 | Los Banos | -120.8635711 | 37.0495952 | 35.98 | 69.95 | 65-70% | No | 0.051 | 69.23 |
| 6037401603 | 2913 | Los Angeles | 91750 | La Verne | -117.7806216 | 34.1095896 | 35.96 | 69.93 | 65-70% | No | 0.060 | 85.21 |
| 6107002204 | 6126 | Tulare | 93274 | Tulare | -119.3587288 | 36.2183676 | 35.94 | 69.92 | 65-70% | No | 0.060 | 85.21 |
| 6037535802 | 6814 | Los Angeles | 90280 | South Gate | -118.2075235 | 33.9408573 | 35.93 | 69.91 | 65-70% | No | 0.044 | 40.49 |
| 6037408211 | 5947 | Los Angeles | 91748 | Rowland Heights | -117.9080818 | 33.9988356 | 35.93 | 69.90 | 65-70% | No | 0.050 | 64.80 |
| 6037603301 | 3828 | Los Angeles | 90247 | Gardena | -118.3062127 | 33.8840986 | 35.92 | 69.88 | 65-70% | No | 0.044 | 40.49 |
| 6037555103 | 4727 | Los Angeles | 90715 | Lakewood | -118.0652797 | 33.8445898 | 35.90 | 69.87 | 65-70% | No | 0.044 | 40.49 |
| 6037552001 | 4105 | Los Angeles | 90650 | Norwalk | -118.0951779 | 33.9123664 | 35.89 | 69.86 | 65-70% | No | 0.046 | 53.02 |
| 6115040500 | 4111 | Yuba | 95961 | Olivehurst | -121.5535692 | 39.1003669 | 35.89 | 69.84 | 65-70% | No | 0.048 | 60.88 |
| 6037480902 | 4218 | Los Angeles | 91803 | Alhambra | -118.1390208 | 34.0802793 | 35.87 | 69.83 | 65-70% | No | 0.050 | 64.80 |
| 6065043309 | 2890 | Riverside | 92544 | Hemet | -116.9504264 | 33.751115 | 35.87 | 69.82 | 65-70% | No | 0.065 | 98.18 |
| 6001400700 | 4206 | Alameda | 94608 | Emeryville | -122.2723135 | 37.8417578 | 35.87 | 69.81 | 65-70% | No | 0.030 | 7.58 |
| 6037430002 | 7021 | Los Angeles | 91010 | Duarte | -117.9554107 | 34.1393519 | 35.87 | 69.79 | 65-70% | No | 0.053 | 73.93 |
| 6071007302 | 10039 | San Bernardino | 92373 | Redlands | -117.2307072 | 34.0226242 | 35.87 | 69.78 | 65-70% | No | 0.068 | 100.00 |
| 6095251500 | 3555 | Solano | 94590 | Vallejo | -122.2497147 | 38.111521 | 35.86 | 69.77 | 65-70% | No | 0.035 | 16.94 |
| 6075026403 | 4140 | San Francisco | 94134 | San Francisco | -122.4069033 | 37.7111894 | 35.84 | 69.76 | 65-70% | No | 0.030 | 7.58 |
| 6031000403 | 5281 | Kings | 93245 | Lemoore | -119.778526 | 36.3207094 | 35.83 | 69.74 | 65-70% | No | 0.062 | 91.10 |
| 6019004215 | 4475 | Fresno | 93722 | Fresno | -119.8992769 | 36.8306861 | 35.81 | 69.73 | 65-70% | No | 0.060 | 85.21 |
| 6067005505 | 4550 | Sacramento | 95825 | Sacramento | -121.4083506 | 38.6033897 | 35.81 | 69.72 | 65-70% | No | 0.050 | 64.80 |
| 6073015801 | 3550 | San Diego | 92020 | El Cajon | -116.9593301 | 32.796887 | 35.78 | 69.71 | 65-70% | No | 0.046 | 53.02 |
| 6059074701 | 8346 | Orange | 92704 | Santa Ana | -117.8955125 | 33.730917 | 35.77 | 69.69 | 65-70% | No | 0.046 | 53.02 |
| 6037900102 | 1029 | Los Angeles | 93535 | Lancaster | -117.7517043 | 34.6825868 | 35.73 | 69.68 | 65-70% | No | 0.065 | 98.18 |
| 6071008100 | 3182 | San Bernardino | 92373 | Redlands | -117.1894607 | 34.0555603 | 35.71 | 69.67 | 65-70% | No | 0.068 | 100.00 |
| 6037406411 | 2126 | Los Angeles | 91791 | West Covina | -117.8997854 | 34.0696708 | 35.70 | 69.66 | 65-70% | No | 0.055 | 77.87 |
| 6037555002 | 3475 | Los Angeles | 90715 | Lakewood | -118.089263 | 33.8352186 | 35.69 | 69.64 | 65-70% | No | 0.044 | 40.49 |
| 6001433300 | 6834 | Alameda | 94579 | San Leandro | -122.1574574 | 37.6985801 | 35.69 | 69.63 | 65-70% | No | 0.030 | 7.58 |
| 6065051200 | 3403 | Riverside | 92590 | Temecula | -117.2137708 | 33.4881171 | 35.68 | 69.62 | 65-70% | No | 0.055 | 77.87 |
| 6037404501 | 2355 | Los Angeles | 91702 | Azusa | -117.9220312 | 34.1109251 | 35.68 | 69.61 | 65-70% | No | 0.053 | 73.93 |
| 6081600200 | 4154 | San Mateo | 94014 | Daly City | -122.4157229 | 37.704444 | 35.67 | 69.59 | 65-70% | No | 0.030 | 7.58 |
| 6037530202 | 4063 | Los Angeles | 90640 | Montebello | -118.1344535 | 34.0298138 | 35.66 | 69.58 | 65-70% | No | 0.046 | 53.02 |
| 6037534700 | 4283 | Los Angeles | 90255 | Huntington Park | -118.2147845 | 33.9682908 | 35.65 | 69.57 | 65-70% | No | 0.046 | 53.02 |
| 6059074106 | 6015 | Orange | 92704 | Santa Ana | -117.9165225 | 33.7043732 | 35.65 | 69.55 | 65-70% | No | 0.044 | 40.49 |
| 6037571600 | 2039 | Los Angeles | 90805 | Long Beach | -118.1813827 | 33.8498715 | 35.65 | 69.54 | 65-70% | No | 0.042 | 31.84 |
| 6065042730 | 5338 | Riverside | 92585 | Sun City | -117.1666928 | 33.7592819 | 35.65 | 69.53 | 65-70% | No | 0.065 | 98.18 |
| 6067006600 | 6166 | Sacramento | 95815 | Sacramento | -121.4409218 | 38.6251651 | 35.63 | 69.52 | 65-70% | No | 0.050 | 64.80 |
| 6037139401 | 2645 | Los Angeles | 91356 | Tarzana | -118.537583 | 34.1696955 | 35.62 | 69.50 | 65-70% | No | 0.057 | 82.10 |
| 6037554900 | 6991 | Los Angeles | 90701 | Artesia | -118.0792349 | 33.8612643 | 35.61 | 69.49 | 65-70% | No | 0.044 | 40.49 |
| 6111005002 | 3003 | Ventura | 93036 | Oxnard | -119.1371739 | 34.2329791 | 35.59 | 69.48 | 65-70% | No | 0.044 | 40.49 |
| 6037139301 | 4462 | Los Angeles | 91356 | Tarzana | -118.5581266 | 34.1781538 | 35.58 | 69.47 | 65-70% | No | 0.057 | 82.10 |
| 6037431200 | 6439 | Los Angeles | 91010 | Duarte | -117.995471 | 34.1233883 | 35.57 | 69.45 | 65-70% | No | 0.053 | 73.93 |
| 6037603600 | 4037 | Los Angeles | 90249 | Gardena | -118.3223468 | 33.8893924 | 35.56 | 69.44 | 65-70% | No | 0.044 | 40.49 |
| 6041112202 | 4217 | Marin | 94901 | San Rafael | -122.4936362 | 37.9562458 | 35.56 | 69.43 | 65-70% | No | 0.030 | 7.58 |
| 6071003611 | 4575 | San Bernardino | 92324 | Colton | -117.3615997 | 34.0814164 | 35.56 | 69.42 | 65-70% | No | 0.065 | 98.18 |
| 6037482600 | 6866 | Los Angeles | 91755 | Monterey Park | -118.1143942 | 34.0509646 | 35.56 | 69.40 | 65-70% | No | 0.048 | 60.88 |

| | | | | | | | | | | |
|---|---|---|---|---|---|---|---|---|---|---|
| 6085503217 | 4512 | Santa Clara | 95111 | San Jose | -121.8303183 | 37.2867501 | 35.54 | 69.39 | 65-70% | No |
| 6037480903 | 3206 | Los Angeles | 91803 | Alhambra | -118.139349 | 34.0736606 | 35.51 | 69.38 | 65-70% | No |
| 6001425102 | 2807 | Alameda | 94608 | Emeryville | -122.2946582 | 37.8400768 | 35.50 | 69.37 | 65-70% | No |
| 6037576601 | 4399 | Los Angeles | 90802 | Long Beach | -118.1799258 | 33.7665662 | 35.49 | 69.35 | 65-70% | No |
| 6037119900 | 4940 | Los Angeles | 91402 | Panorama City | -118.4412802 | 34.2278369 | 35.49 | 69.34 | 65-70% | No |
| 6037571704 | 4107 | Los Angeles | 90805 | Long Beach | -118.1870723 | 33.8499458 | 35.49 | 69.33 | 65-70% | No |
| 6067009639 | 3554 | Sacramento | 95758 | Elk Grove | -121.4080911 | 38.4299065 | 35.47 | 69.32 | 65-70% | No |
| 6071002705 | 5513 | San Bernardino | 92377 | Rialto | -117.3931048 | 34.1440395 | 35.46 | 69.30 | 65-70% | No |
| 6037123700 | 4114 | Los Angeles | 91606 | North Hollywood | -118.4095169 | 34.1848596 | 35.46 | 69.29 | 65-70% | No |
| 6077003109 | 5630 | San Joaquin | 95207 | Stockton | -121.3447729 | 38.0092936 | 35.46 | 69.28 | 65-70% | No |
| 6107003801 | 3077 | Tulare | 93257 | Porterville | -119.0322513 | 36.0713873 | 35.43 | 69.26 | 65-70% | No |
| 6059074803 | 9053 | Orange | 92704 | Santa Ana | -117.9084412 | 33.7358623 | 35.42 | 69.25 | 65-70% | No |
| 6067001300 | 3005 | Sacramento | 95816 | Sacramento | -121.4745179 | 38.5684782 | 35.42 | 69.24 | 65-70% | No |
| 6019005606 | 3847 | Fresno | 93612 | Clovis | -119.7214645 | 36.8302984 | 35.40 | 69.23 | 65-70% | No |
| 6073010110 | 7298 | San Diego | 92154 | San Diego | -117.0885683 | 32.5703957 | 35.40 | 69.21 | 65-70% | No |
| 6099000201 | 5908 | Stanislaus | 95361 | Oakdale | -120.8727188 | 37.7667839 | 35.40 | 69.20 | 65-70% | No |
| 6065046102 | 2027 | Riverside | 92225 | Blythe | -114.609989 | 33.6137829 | 35.40 | 69.19 | 65-70% | No |
| 6067002700 | 3383 | Sacramento | 95817 | Sacramento | -121.4711099 | 38.54761 | 35.40 | 69.18 | 65-70% | No |
| 6037113234 | 4667 | Los Angeles | 91304 | Canoga Park | -118.5939793 | 34.2257746 | 35.39 | 69.16 | 65-70% | No |
| 6037235100 | 4520 | Los Angeles | 90043 | Los Angeles | -118.3463239 | 33.9852423 | 35.38 | 69.15 | 65-70% | No |
| 6037602404 | 5863 | Los Angeles | 90250 | Hawthorne | -118.3481533 | 33.906025 | 35.36 | 69.14 | 65-70% | No |
| 6037540201 | 2370 | Los Angeles | 90280 | South Gate | -118.2152045 | 33.9432105 | 35.36 | 69.13 | 65-70% | No |
| 6037407301 | 4828 | Los Angeles | 91744 | La Puente | -117.958718 | 34.0454982 | 35.35 | 69.11 | 65-70% | No |
| 6075022802 | 2099 | San Francisco | 94110 | San Francisco | -122.4062322 | 37.7589152 | 35.35 | 69.10 | 65-70% | No |
| 6053014601 | 5232 | Monterey | 95039 | Moss Landing | -121.7572058 | 36.8334157 | 35.35 | 69.09 | 65-70% | No |
| 6081610202 | 2429 | San Mateo | 94063 | Redwood City | -122.2304268 | 37.4894625 | 35.34 | 69.08 | 65-70% | No |
| 6031001500 | 4619 | Kings | 93212 | Corcoran | -119.5738328 | 36.1028669 | 35.34 | 69.06 | 65-70% | No |
| 6037207900 | 4163 | Los Angeles | 90015 | Los Angeles | -118.2601678 | 34.0405276 | 35.33 | 69.05 | 65-70% | No |
| 6037293304 | 4178 | Los Angeles | 90710 | Harbor City | -118.3043149 | 33.7926172 | 35.32 | 69.04 | 65-70% | No |
| 6059063701 | 6266 | Orange | 92627 | Costa Mesa | -117.9275368 | 33.648434 | 35.32 | 69.03 | 65-70% | No |
| 6065042406 | 4150 | Riverside | 92557 | Moreno Valley | -117.2527895 | 33.9502452 | 35.31 | 69.01 | 65-70% | No |
| 6047000402 | 8071 | Merced | 95324 | Hilmar | -120.8953613 | 37.3998708 | 35.31 | 69.00 | 65-70% | No |
| 6037600702 | 4191 | Los Angeles | 90305 | Inglewood | -118.3335012 | 33.9497147 | 35.31 | 68.99 | 65-70% | No |
| 6037572400 | 1152 | Los Angeles | 90810 | Long Beach | -118.2108384 | 33.8248551 | 35.29 | 68.97 | 65-70% | No |
| 6071025100 | 1688 | San Bernardino | 92332 | Essex | -114.8402003 | 34.5022634 | 35.26 | 68.96 | 65-70% | No |
| 6037113421 | 6109 | Los Angeles | 91311 | Chatsworth | -118.5830621 | 34.2335792 | 35.26 | 68.95 | 65-70% | No |
| 6059088001 | 5004 | Orange | 92841 | Garden Grove | -117.9799113 | 33.7957662 | 35.25 | 68.94 | 65-70% | No |
| 6075025702 | 4665 | San Francisco | 94134 | San Francisco | -122.4057589 | 37.7281305 | 35.25 | 68.92 | 65-70% | No |
| 6037310400 | 3379 | Los Angeles | 91504 | Burbank | -118.3354064 | 34.2026771 | 35.25 | 68.91 | 65-70% | No |
| 6071000501 | 6785 | San Bernardino | 91710 | Chino | -117.7068103 | 34.0262054 | 35.24 | 68.90 | 65-70% | No |
| 6065040812 | 3480 | Riverside | 92860 | Norco | -117.5494884 | 33.9244565 | 35.23 | 68.89 | 65-70% | No |
| 6029004401 | 7308 | Kern | 93280 | Wasco | -119.3476988 | 35.5937099 | 35.22 | 68.87 | 65-70% | No |
| 6037900701 | 5289 | Los Angeles | 93534 | Lancaster | -118.14081 | 34.6819687 | 35.21 | 68.86 | 65-70% | No |
| 6037119400 | 4987 | Los Angeles | 91331 | Pacoima | -118.4353682 | 34.2378874 | 35.21 | 68.85 | 65-70% | No |
| 6037432902 | 3482 | Los Angeles | 91770 | Rosemead | -118.0599559 | 34.0786952 | 35.20 | 68.84 | 65-70% | No |
| 6037195901 | 2235 | Los Angeles | 90029 | Los Angeles | -118.2823148 | 34.0887786 | 35.20 | 68.82 | 65-70% | No |
| 6037211120 | 5194 | Los Angeles | 90020 | Los Angeles | -118.2877775 | 34.0652365 | 35.19 | 68.81 | 65-70% | No |
| 6037132502 | 3672 | Los Angeles | 91335 | Reseda | -118.5469513 | 34.1911391 | 35.18 | 68.80 | 65-70% | No |
| 6007003002 | 3531 | Butte | 95965 | Oroville | -121.5601305 | 39.477074 | 35.18 | 68.79 | 65-70% | No |
| 6065040901 | 6516 | Riverside | 92505 | Riverside | -117.4898954 | 33.913354 | 35.17 | 68.77 | 65-70% | No |
| 6059074102 | 6819 | Orange | 92704 | Santa Ana | -117.8902708 | 33.7212817 | 35.17 | 68.76 | 65-70% | No |
| 6099002803 | 2866 | Stanislaus | 95355 | Modesto | -120.9154999 | 37.6679063 | 35.17 | 68.75 | 65-70% | No |
| 6037106649 | 2853 | Los Angeles | 91342 | Sylmar | -118.4606541 | 34.2892618 | 35.16 | 68.74 | 65-70% | No |
| 6013307202 | 3933 | Contra Costa | 94509 | Antioch | -121.8278001 | 38.0037019 | 35.16 | 68.72 | 65-70% | No |
| 6037115202 | 4828 | Los Angeles | 91324 | Northridge | -118.5376549 | 34.2332349 | 35.16 | 68.71 | 65-70% | No |
| 6071007408 | 4181 | San Bernardino | 92404 | San Bernardino | -117.2349381 | 34.1249384 | 35.14 | 68.70 | 65-70% | No |
| 6081610500 | 4963 | San Mateo | 94063 | Redwood City | -122.2044816 | 37.4797497 | 35.14 | 68.68 | 65-70% | No |
| 6037208501 | 2656 | Los Angeles | 90026 | Los Angeles | -118.2719463 | 34.0695316 | 35.14 | 68.67 | 65-70% | No |
| 6113010201 | 2538 | Yolo | 95691 | West Sacramento | -121.5229093 | 38.5728417 | 35.14 | 68.66 | 65-70% | No |
| 6075023003 | 4093 | San Francisco | 94124 | San Francisco | -122.3958269 | 37.7326723 | 35.13 | 68.65 | 65-70% | No |
| 6021010400 | 7636 | Glenn | 95988 | Willows | -122.2104734 | 39.5223177 | 35.12 | 68.63 | 65-70% | No |
| 6067004100 | 5015 | Sacramento | 95822 | Sacramento | -121.4785228 | 38.5066191 | 35.10 | 68.62 | 65-70% | No |
| 6037701701 | 3196 | Los Angeles | 90404 | Santa Monica | -118.4722531 | 34.032337 | 35.09 | 68.61 | 65-70% | No |
| 6037502901 | 5413 | Los Angeles | 90605 | Whittier | -118.0409409 | 33.9459765 | 35.08 | 68.60 | 65-70% | No |
| 6071002305 | 10725 | San Bernardino | 92336 | Fontana | -117.4711132 | 34.1139657 | 35.07 | 68.58 | 65-70% | No |
| 6037132900 | 3461 | Los Angeles | 91335 | Reseda | -118.5281458 | 34.1831957 | 35.06 | 68.57 | 65-70% | No |
| 6013316000 | 1483 | Contra Costa | 94553 | Martinez | -122.1389042 | 38.0223177 | 35.06 | 68.56 | 65-70% | No |
| 6059087703 | 6246 | Orange | 92804 | Anaheim | -117.9632386 | 33.8104078 | 35.06 | 68.55 | 65-70% | No |
| 6077005303 | 4694 | San Joaquin | 95376 | Tracy | -121.4304794 | 37.7468443 | 35.04 | 68.53 | 65-70% | No |
| 6073016617 | 3102 | San Diego | 92071 | Santee | -116.9721473 | 32.835197 | 35.02 | 68.52 | 65-70% | No |
| 6037212305 | 2865 | Los Angeles | 90005 | Los Angeles | -118.2981624 | 34.0561038 | 35.02 | 68.51 | 65-70% | No |
| 6001402600 | 1151 | Alameda | 94607 | Oakland | -122.2799541 | 37.8042711 | 35.00 | 68.50 | 65-70% | No |
| 6077004102 | 8072 | San Joaquin | 95240 | Lodi | -121.2646161 | 38.0822443 | 34.99 | 68.48 | 65-70% | No |
| 6037211804 | 3221 | Los Angeles | 90020 | Los Angeles | -118.3066067 | 34.0671619 | 34.98 | 68.47 | 65-70% | No |
| 6075026401 | 4044 | San Francisco | 94134 | San Francisco | -122.4112834 | 37.7135251 | 34.98 | 68.46 | 65-70% | No |
| 6081611800 | 4433 | San Mateo | 94303 | Palo Alto | -122.1324808 | 37.4770584 | 34.98 | 68.44 | 65-70% | No |
| 6039000604 | 5467 | Madera | 93638 | Madera | -120.0643287 | 36.9796339 | 34.97 | 68.43 | 65-70% | No |
| 6047001004 | 3968 | Merced | 95348 | Merced | -120.477943 | 37.3183669 | 34.96 | 68.42 | 65-70% | No |
| 6075061400 | 5395 | San Francisco | 94107 | San Francisco | -122.3974733 | 37.7550917 | 34.96 | 68.41 | 65-70% | No |
| 6067007004 | 7533 | Sacramento | 95834 | Sacramento | -121.4898006 | 38.6327983 | 34.95 | 68.39 | 65-70% | No |
| 6065042744 | 3726 | Riverside | 92567 | Nuevo | -117.081948 | 33.8262813 | 34.94 | 68.38 | 65-70% | No |
| 6037702803 | 2963 | Los Angeles | 90066 | Los Angeles | -118.4325909 | 33.9954427 | 34.94 | 68.37 | 65-70% | No |
| 6065040904 | 3655 | Riverside | 92505 | Riverside | -117.4972884 | 33.9304797 | 34.93 | 68.36 | 65-70% | No |
| 6059011722 | 2363 | Orange | 92870 | Placentia | -117.8706075 | 33.8654909 | 34.93 | 68.34 | 65-70% | No |
| 6037406602 | 4973 | Los Angeles | 91790 | West Covina | -117.9318958 | 34.0542813 | 34.93 | 68.33 | 65-70% | No |
| 6059089105 | 6387 | Orange | 92703 | Santa Ana | -117.912077 | 33.7526801 | 34.93 | 68.32 | 65-70% | No |
| 6037480803 | 3464 | Los Angeles | 91801 | Alhambra | -118.1536066 | 34.0909207 | 34.90 | 68.31 | 65-70% | No |
| 6111004716 | 4476 | Ventura | 93033 | Oxnard | -119.1511429 | 34.1859635 | 34.90 | 68.29 | 65-70% | No |
| 6001405901 | 3910 | Alameda | 94606 | Oakland | -122.2357701 | 37.787786 | 34.89 | 68.28 | 65-70% | No |
| 6037131702 | 3751 | Los Angeles | 91335 | Reseda | -118.5476933 | 34.2035942 | 34.89 | 68.27 | 65-70% | No |
| 6037189102 | 3096 | Los Angeles | 90027 | Los Angeles | -118.2884331 | 34.1126008 | 34.89 | 68.26 | 65-70% | No |
| 6037134101 | 4922 | Los Angeles | 91306 | Winnetka | -118.5666433 | 34.2143034 | 34.88 | 68.24 | 65-70% | No |
| 6037199300 | 3848 | Los Angeles | 90031 | Los Angeles | -118.2003961 | 34.0941911 | 34.88 | 68.23 | 65-70% | No |
| 6037201503 | 3323 | Los Angeles | 90032 | Los Angeles | -118.1739007 | 34.0851726 | 34.88 | 68.22 | 65-70% | No |
| 6073012402 | 5445 | San Diego | 91910 | Chula Vista | -117.0878962 | 32.6430592 | 34.88 | 68.21 | 65-70% | No |
| 6013314200 | 6482 | Contra Costa | 94565 | Pittsburg | -121.9812128 | 38.0467432 | 34.87 | 68.19 | 65-70% | No |
| 6065040606 | 3329 | Riverside | 91752 | Mira Loma | -117.5145711 | 33.9827133 | 34.87 | 68.18 | 65-70% | No |
| 6059086901 | 8725 | Orange | 92804 | Anaheim | -118.0065042 | 33.8246115 | 34.87 | 68.17 | 65-70% | No |
| 6029006301 | 4004 | Kern | 93203 | Arvin | -118.83337 | 35.2236273 | 34.86 | 68.15 | 65-70% | No |
| 6037107020 | 5404 | Los Angeles | 91342 | Sylmar | -118.4504793 | 34.2975505 | 34.85 | 68.14 | 65-70% | No |
| 6053001300 | 2548 | Monterey | 93901 | Salinas | -121.6550382 | 36.6748937 | 34.85 | 68.13 | 65-70% | No |
| 6065042509 | 3193 | Riverside | 92553 | Moreno Valley | -117.2306582 | 33.9100514 | 34.85 | 68.12 | 65-70% | No |
| 6085503204 | 8175 | Santa Clara | 95111 | San Jose | -121.8392542 | 37.2891788 | 34.84 | 68.10 | 65-70% | No |
| 6107000402 | 7002 | Tulare | 93618 | Dinuba | -119.3860655 | 36.5529114 | 34.84 | 68.09 | 65-70% | No |
| 6037407400 | 2133 | Los Angeles | 91790 | West Covina | -117.9577635 | 34.0523638 | 34.83 | 68.08 | 65-70% | No |
| 6065040202 | 2821 | Riverside | 92509 | Riverside | -117.433385 | 33.982183 | 34.83 | 68.07 | 65-70% | No |
| 6037551000 | 7200 | Los Angeles | 90241 | Downey | -118.112141 | 33.9374454 | 34.81 | 68.05 | 65-70% | No |
| 6037189902 | 4971 | Los Angeles | 90046 | Los Angeles | -118.3490051 | 34.0961801 | 34.81 | 68.04 | 65-70% | No |
| 6037900806 | 3620 | Los Angeles | 93534 | Lancaster | -118.1419762 | 34.69644 | 34.81 | 68.03 | 65-70% | No |
| 6071000113 | 11112 | San Bernardino | 91709 | Chino Hills | -117.7039952 | 33.9705846 | 34.80 | 68.02 | 65-70% | No |
| 6037702600 | 6069 | Los Angeles | 90230 | Culver City | -118.3961597 | 33.9958996 | 34.80 | 68.00 | 65-70% | No |
| 6077004402 | 4998 | San Joaquin | 95240 | Lodi | -121.2580651 | 38.1086488 | 34.80 | 67.99 | 65-70% | No |
| 6107002008 | 2769 | Tulare | 93277 | Visalia | -119.3406647 | 36.3236674 | 34.79 | 67.98 | 65-70% | No |
| 6037117202 | 2471 | Los Angeles | 91343 | North Hills | -118.4788675 | 34.2429124 | 34.78 | 67.97 | 65-70% | No |
| 6037201200 | 2519 | Los Angeles | 90032 | Los Angeles | -118.1785407 | 34.0887082 | 34.78 | 67.95 | 65-70% | No |
| 6059087103 | 8470 | Orange | 92804 | Anaheim | -117.9487797 | 33.8264301 | 34.78 | 67.94 | 65-70% | No |
| 6037501300 | 7238 | Los Angeles | 90601 | Whittier | -118.0536684 | 33.9909544 | 34.78 | 67.93 | 65-70% | No |
| 6001406500 | 5930 | Alameda | 94601 | Oakland | -122.2169867 | 37.7880813 | 34.76 | 67.92 | 65-70% | No |
| 6037910403 | 2235 | Los Angeles | 93550 | Palmdale | -118.1254252 | 34.576145 | 34.76 | 67.90 | 65-70% | No |
| 6059074806 | 5057 | Orange | 92703 | Santa Ana | -117.8922742 | 33.7368361 | 34.75 | 67.89 | 65-70% | No |
| 6077003217 | 3201 | San Joaquin | 95209 | Stockton | -121.3549153 | 38.0224563 | 34.73 | 67.88 | 65-70% | No |
| 6037212410 | 3903 | Los Angeles | 90005 | Los Angeles | -118.3022262 | 34.0595607 | 34.72 | 67.86 | 65-70% | No |
| 6037134103 | 4193 | Los Angeles | 91306 | Winnetka | -118.5814401 | 34.2185595 | 34.71 | 67.85 | 65-70% | No |
| 6065041904 | 4786 | Riverside | 92882 | Corona | -117.6564424 | 33.8836237 | 34.70 | 67.84 | 65-70% | No |
| 6019004409 | 3486 | Fresno | 93711 | Fresno | -119.811928 | 36.8437897 | 34.70 | 67.83 | 65-70% | No |
| 6037218110 | 3453 | Los Angeles | 90019 | Los Angeles | -118.3275531 | 34.0443254 | 34.70 | 67.81 | 65-70% | No |
| 6077005307 | 3214 | San Joaquin | 95376 | Tracy | -121.4445217 | 37.7508835 | 34.69 | 67.80 | 65-70% | No |
| 6059086305 | 4006 | Orange | 92806 | Anaheim | -117.8794788 | 33.829141 | 34.68 | 67.79 | 65-70% | No |
| 6037134303 | 5057 | Los Angeles | 91303 | Canoga Park | -118.611899 | 34.203248 | 34.68 | 67.78 | 65-70% | No |
| 6059052410 | 5403 | Orange | 92618 | Irvine | -117.7183865 | 33.6380921 | 34.68 | 67.76 | 65-70% | No |
| 6085503207 | 3938 | Santa Clara | 95121 | San Jose | -121.8153841 | 37.2944974 | 34.67 | 67.75 | 65-70% | No |
| 6001427200 | 4107 | Alameda | 94501 | Alameda | -122.2529164 | 37.7847324 | 34.67 | 67.74 | 65-70% | No |
| 6007001000 | 4801 | Butte | 95928 | Chico | -121.8344873 | 39.7293637 | 34.67 | 67.73 | 65-70% | No |
| 6101050501 | 6182 | Sutter | 95993 | Yuba City | -121.6664276 | 39.134305 | 34.66 | 67.71 | 65-70% | No |
| 6019001412 | 2790 | Fresno | 93727 | Fresno | -119.6639753 | 36.7435858 | 34.63 | 67.70 | 65-70% | No |
| 6065031501 | 7387 | Riverside | 92504 | Riverside | -117.4320467 | 33.929195 | 34.62 | 67.69 | 65-70% | No |
| 6037212610 | 4074 | Los Angeles | 90005 | Los Angeles | -118.3138698 | 34.0598448 | 34.62 | 67.68 | 65-70% | No |
| 6073014803 | 4690 | San Diego | 91942 | La Mesa | -117.0229522 | 32.7788537 | 34.61 | 67.66 | 65-70% | No |
| 6037311100 | 3897 | Los Angeles | 91505 | Burbank | -118.3546268 | 34.1856903 | 34.60 | 67.65 | 65-70% | No |
| 6071010014 | 4800 | San Bernardino | 92345 | Hesperia | -117.3059014 | 34.4359597 | 34.59 | 67.64 | 65-70% | No |
| 6067007403 | 4537 | Sacramento | 95660 | North Highlands | -121.3719125 | 38.6775875 | 34.59 | 67.63 | 65-70% | No |
| 6059099223 | 5102 | Orange | 92683 | Westminster | -117.9590751 | 33.7376141 | 34.57 | 67.61 | 65-70% | No |
| 6073010012 | 4581 | San Diego | 92173 | San Ysidro | -117.0584994 | 32.5607791 | 34.57 | 67.60 | 65-70% | No |
| 6037481201 | 3598 | Los Angeles | 91780 | Temple City | -118.0710962 | 34.0976177 | 34.57 | 67.59 | 65-70% | No |
| 6077003106 | 3600 | San Joaquin | 95219 | Stockton | -121.362321 | 38.0003872 | 34.56 | 67.57 | 65-70% | No |
| 6071003605 | 4223 | San Bernardino | 92316 | Bloomington | -117.392117 | 34.0813583 | 34.56 | 67.56 | 65-70% | No |
| 6037404202 | 3366 | Los Angeles | 91702 | Azusa | -117.8857465 | 34.1250526 | 34.55 | 67.55 | 65-70% | No |
| 6037141302 | 5504 | Los Angeles | 91403 | Sherman Oaks | -118.46283 | 34.1536798 | 34.55 | 67.54 | 65-70% | No |
| 6001444500 | 6696 | Alameda | 94560 | Newark | -122.0273559 | 37.5342611 | 34.54 | 67.52 | 65-70% | No |
| 6071011900 | 3567 | San Bernardino | 92347 | Hinkley | -117.0754285 | 34.9440127 | 34.54 | 67.51 | 65-70% | No |
| 6071012101 | 5565 | San Bernardino | 92307 | Apple Valley | -117.2235881 | 34.5925409 | 34.51 | 67.50 | 65-70% | No |
| 6085501700 | 4916 | Santa Clara | 95110 | San Jose | -121.8863954 | 37.3232689 | 34.50 | 67.49 | 65-70% | No |
| 6037407101 | 4834 | Los Angeles | 91746 | La Puente | -117.9723257 | 34.0478649 | 34.50 | 67.47 | 65-70% | No |
| 6001405902 | 3035 | Alameda | 94606 | Oakland | -122.240953 | 37.7909446 | 34.49 | 67.46 | 65-70% | No |
| 6101050900 | 1561 | Sutter | 95957 | Meridian | -121.7595873 | 38.975616 | 34.46 | 67.45 | 65-70% | No |
| 6037551300 | 5422 | Los Angeles | 90241 | Downey | -118.1339117 | 33.9352796 | 34.46 | 67.44 | 65-70% | No |
| 6065040902 | 5040 | Riverside | 92505 | Riverside | -117.5082303 | 33.9264805 | 34.45 | 67.42 | 65-70% | No |
| 6059088402 | 4854 | Orange | 92840 | Garden Grove | -117.9193342 | 33.7888535 | 34.45 | 67.41 | 65-70% | No |
| 6067007202 | 4065 | Sacramento | 95673 | Rio Linda | -121.4246506 | 38.6830858 | 34.44 | 67.40 | 65-70% | No |
| 6031000402 | 5280 | Kings | 93245 | Lemoore | -119.769357 | 36.2769538 | 34.42 | 67.39 | 65-70% | No |
| 6065050900 | 4340 | Riverside | 92507 | Riverside | -117.3011639 | 33.9384446 | 34.41 | 67.37 | 65-70% | No |
| 6013313206 | 5757 | Contra Costa | 94565 | Pittsburg | -121.8993314 | 38.0139188 | 34.40 | 67.36 | 65-70% | No |
| 6077001101 | 4931 | San Joaquin | 95204 | Stockton | -121.3288819 | 37.9761614 | 34.40 | 67.35 | 65-70% | No |
| 6037532102 | 3574 | Los Angeles | 90640 | Montebello | -118.1116637 | 33.9983747 | 34.37 | 67.34 | 65-70% | No |
| 6039000700 | 10776 | Madera | 93637 | Madera | -120.0851443 | 36.9569657 | 34.37 | 67.32 | 65-70% | No |
| 6073016504 | 6253 | San Diego | 92021 | El Cajon | -116.9558727 | 32.8134188 | 34.36 | 67.31 | 65-70% | No |
| 6057000600 | 6237 | Nevada | 95945 | Grass Valley | -121.0349258 | 39.2143799 | 34.36 | 67.30 | 65-70% | No |
| 6059075202 | 5753 | Orange | 92703 | Santa Ana | -117.8902573 | 33.7548958 | 34.36 | 67.28 | 65-70% | No |
| 6031001401 | 3002 | Kings | 93212 | Corcoran | -119.5624953 | 36.0861268 | 34.35 | 67.27 | 65-70% | No |
| 6085503709 | 5088 | Santa Clara | 95133 | San Jose | -121.8620422 | 37.3645486 | 34.35 | 67.26 | 65-70% | No |
| 6073004600 | 1940 | San Diego | 92102 | San Diego | -117.1449018 | 32.7151851 | 34.35 | 67.25 | 65-70% | No |
| 6037211910 | 4657 | Los Angeles | 90020 | Los Angeles | -118.2985036 | 34.0672078 | 34.34 | 67.23 | 65-70% | No |
| 6065044200 | 5701 | Riverside | 92220 | Banning | -116.8679887 | 33.935799 | 34.33 | 67.22 | 65-70% | No |
| 6037554522 | 4787 | Los Angeles | 90703 | Cerritos | -118.0931498 | 33.8523009 | 34.33 | 67.21 | 65-70% | No |
| 6085503712 | 4108 | Santa Clara | 95116 | San Jose | -121.8467084 | 37.3622455 | 34.31 | 67.20 | 65-70% | No |
| 6019006603 | 2047 | Fresno | 93654 | Reedley | -119.4571017 | 36.6073772 | 34.29 | 67.18 | 65-70% | No |
| 6073016000 | 2419 | San Diego | 92020 | El Cajon | -116.9804886 | 32.7886293 | 34.25 | 67.17 | 65-70% | No |
| 6059075302 | 4481 | Orange | 92706 | Santa Ana | -117.8897014 | 33.7649688 | 34.25 | 67.16 | 65-70% | No |
| 6065045703 | 5708 | Riverside | 92236 | Coachella | -116.1700827 | 33.6628977 | 34.25 | 67.15 | 65-70% | No |
| 6067008908 | 4835 | Sacramento | 95670 | Rancho Cordova | -121.2771388 | 38.6063736 | 34.24 | 67.13 | 65-70% | No |
| 6065041406 | 5968 | Riverside | 92505 | Riverside | -117.4870786 | 33.9035269 | 34.24 | 67.12 | 65-70% | No |
| 6013302007 | 6347 | Contra Costa | 94561 | Oakley | -121.7056533 | 37.9837121 | 34.22 | 67.11 | 65-70% | No |
| 6083000804 | 7189 | Santa Barbara | 93103 | Santa Barbara | -119.6802223 | 34.4180158 | 34.22 | 67.10 | 65-70% | No |
| 6037462002 | 3942 | Los Angeles | 91103 | Pasadena | -118.1483611 | 34.1633406 | 34.21 | 67.08 | 65-70% | No |
| 6095252606 | 5148 | Solano | 94533 | Fairfield | -122.0295802 | 38.265491 | 34.21 | 67.07 | 65-70% | No |
| 6025012301 | 5633 | Imperial | 92274 | Thermal | -115.9218123 | 32.9323841 | 34.19 | 67.06 | 65-70% | No |
| 6001400800 | 3594 | Alameda | 94608 | Emeryville | -122.2833803 | 37.8454493 | 34.19 | 67.05 | 65-70% | No |
| 6077004302 | 5718 | San Joaquin | 95240 | Lodi | -121.280177 | 38.1228276 | 34.18 | 67.03 | 65-70% | No |
| 6037132501 | 3763 | Los Angeles | 91335 | Reseda | -118.548597 | 34.1968245 | 34.18 | 67.02 | 65-70% | No |
| 6059089104 | 5376 | Orange | 92843 | Garden Grove | -117.9096281 | 33.7571126 | 34.18 | 67.01 | 65-70% | No |
| 6071004505 | 4724 | San Bernardino | 92407 | San Bernardino | -117.2851984 | 34.172019 | 34.17 | 66.99 | 65-70% | No |
| 6085503401 | 4915 | Santa Clara | 95122 | San Jose | -121.8399909 | 37.3330501 | 34.17 | 66.98 | 65-70% | No |
| 6037701802 | 4463 | Los Angeles | 90404 | Santa Monica | -118.4789709 | 34.0188907 | 34.15 | 66.97 | 65-70% | No |
| 6059011504 | 5473 | Orange | 92831 | Fullerton | -117.8831131 | 33.8820401 | 34.15 | 66.96 | 65-70% | No |
| 6099001001 | 6042 | Stanislaus | 95355 | Modesto | -120.9656989 | 37.6591088 | 34.14 | 66.94 | 65-70% | No |
| 6107002602 | 5561 | Tulare | 93247 | Lindsay | -119.0817133 | 36.2125439 | 34.13 | 66.93 | 65-70% | No |
| 6013307102 | 5038 | Contra Costa | 94509 | Antioch | -121.8155705 | 38.0004738 | 34.12 | 66.92 | 65-70% | No |
| 6031001001 | 4176 | Kings | 93230 | Hanford | -119.676661 | 36.331353 | 34.11 | 66.91 | 65-70% | No |
| 6001403100 | 2238 | Alameda | 94607 | Oakland | -122.2755009 | 37.8022742 | 34.09 | 66.89 | 65-70% | No |
| 6029005004 | 7219 | Kern | 93215 | Delano | -119.235974 | 35.770351 | 34.09 | 66.88 | 65-70% | No |
| 6029003124 | 5414 | Kern | 93313 | Bakersfield | -119.0655635 | 35.3070654 | 34.08 | 66.87 | 65-70% | No |
| 6059088601 | 6305 | Orange | 92843 | Garden Grove | -117.9441552 | 33.7737751 | 34.08 | 66.86 | 65-70% | No |
| 6095251600 | 2359 | Solano | 94590 | Vallejo | -122.2622993 | 38.1083885 | 34.07 | 66.84 | 65-70% | No |
| 6037212420 | 3228 | Los Angeles | 90005 | Los Angeles | -118.3019777 | 34.0560876 | 34.06 | 66.83 | 65-70% | No |
| 6053001802 | 5078 | Monterey | 93907 | Salinas | -121.6550166 | 36.6856848 | 34.05 | 66.82 | 65-70% | No |
| 6075061000 | 3610 | San Francisco | 94134 | San Francisco | -122.3846994 | 37.7132283 | 34.05 | 66.81 | 65-70% | No |
| 6099000905 | 6102 | Stanislaus | 95355 | Modesto | -120.9486971 | 37.6601322 | 34.05 | 66.79 | 65-70% | No |
| 6099002801 | 5624 | Stanislaus | 95386 | Waterford | -120.6270468 | 37.6688768 | 34.03 | 66.78 | 65-70% | No |
| 6037183810 | 4369 | Los Angeles | 90042 | Los Angeles | -118.1978495 | 34.107365 | 34.03 | 66.77 | 65-70% | No |
| 6037701702 | 3106 | Los Angeles | 90404 | Santa Monica | -118.4840964 | 34.0227687 | 34.03 | 66.75 | 65-70% | No |
| 6001400900 | 2302 | Alameda | 94608 | Emeryville | -122.2802437 | 37.8394669 | 34.02 | 66.74 | 65-70% | No |
| 6073013104 | 5893 | San Diego | 91911 | Chula Vista | -117.0779491 | 32.6131276 | 34.00 | 66.73 | 65-70% | No |
| 6059075514 | 3703 | Orange | 92780 | Tustin | -117.8294395 | 33.7365911 | 34.00 | 66.72 | 65-70% | No |
| 6037265201 | 2608 | Los Angeles | 90024 | Los Angeles | -118.4364091 | 34.0668274 | 34.00 | 66.70 | 65-70% | No |
| 6037551402 | 4468 | Los Angeles | 90241 | Downey | -118.1459703 | 33.9414621 | 33.98 | 66.69 | 65-70% | No |
| 6085503210 | 4453 | Santa Clara | 95111 | San Jose | -121.8229385 | 37.2904578 | 33.97 | 66.68 | 65-70% | No |
| 6115040901 | 2783 | Yuba | 95901 | Marysville | -121.3582036 | 39.184664 | 33.96 | 66.67 | 65-70% | No |
| 6007003300 | 4852 | Butte | 95966 | Oroville | -121.5065211 | 39.3923244 | 33.96 | 66.65 | 65-70% | No |
| 6065043812 | 5409 | Riverside | 92223 | Beaumont | -116.9530089 | 33.8767216 | 33.95 | 66.64 | 65-70% | No |
| 6073018200 | 6847 | San Diego | 92054 | Oceanside | -117.3702384 | 33.1896924 | 33.95 | 66.63 | 65-70% | No |
| 6037134903 | 4216 | Los Angeles | 91303 | Canoga Park | -118.5916957 | 34.1924692 | 33.94 | 66.62 | 65-70% | No |

| | | | | | | | | | |
|---|---|---|---|---|---|---|---|---|---|
| 6037600601 | 2461 | Los Angeles | 90303 | Inglewood | -118.3220544 | 33.9418498 | 33.93 | 66.60 | 65-70% |
| 6059021821 | 6582 | Orange | 92870 | Placentia | -117.8310387 | 33.868307 | 33.93 | 66.59 | 65-70% |
| 6067008910 | 3486 | Sacramento | 95670 | Rancho Cordova | -121.3112128 | 38.5930583 | 33.93 | 66.58 | 65-70% |
| 6073003401 | 6065 | San Diego | 92102 | San Diego | -117.0950788 | 32.7249834 | 33.92 | 66.57 | 65-70% |
| 6037920106 | 3110 | Los Angeles | 91384 | Castaic | -118.6737987 | 34.4444857 | 33.92 | 66.55 | 65-70% |
| 6073011802 | 6741 | San Diego | 91950 | National City | -117.096668 | 32.684033 | 33.89 | 66.54 | 65-70% |
| 6037107010 | 3247 | Los Angeles | 91342 | Sylmar | -118.4467204 | 34.3020803 | 33.89 | 66.53 | 65-70% |
| 6059087106 | 5097 | Orange | 92802 | Anaheim | -117.9300579 | 33.8201001 | 33.88 | 66.52 | 65-70% |
| 6067009110 | 1482 | Sacramento | 95826 | Sacramento | -121.3713784 | 38.5576271 | 33.86 | 66.50 | 65-70% |
| 6037600801 | 3245 | Los Angeles | 90305 | Inglewood | -118.3221115 | 33.9654794 | 33.86 | 66.49 | 65-70% |
| 6013307201 | 3467 | Contra Costa | 94509 | Antioch | -121.8485515 | 38.0026146 | 33.85 | 66.48 | 65-70% |
| 6059099903 | 5749 | Orange | 92683 | Westminster | -118.0116518 | 33.7667353 | 33.84 | 66.46 | 65-70% |
| 6029000102 | 3055 | Kern | 93308 | Bakersfield | -119.0170134 | 35.4294346 | 33.83 | 66.45 | 65-70% |
| 6037187300 | 3216 | Los Angeles | 90039 | Los Angeles | -118.2567268 | 34.1016085 | 33.82 | 66.44 | 65-70% |
| 6077005125 | 1859 | San Joaquin | 95336 | Manteca | -121.2302494 | 37.8203178 | 33.82 | 66.43 | 65-70% |
| 6037554700 | 4874 | Los Angeles | 90650 | Norwalk | -118.0768827 | 33.8842945 | 33.81 | 66.41 | 65-70% |
| 6085505100 | 3027 | Santa Clara | 95110 | San Jose | -121.9239674 | 37.3629186 | 33.80 | 66.40 | 65-70% |
| 6071002306 | 4169 | San Bernardino | 92376 | Rialto | -117.4155957 | 34.1281817 | 33.79 | 66.39 | 65-70% |
| 6037212306 | 3052 | Los Angeles | 90005 | Los Angeles | -118.2940727 | 34.056128 | 33.79 | 66.38 | 65-70% |
| 6059075100 | 9983 | Orange | 92703 | Santa Ana | -117.8797292 | 33.755664 | 33.78 | 66.36 | 65-70% |
| 6001427600 | 4722 | Alameda | 94501 | Alameda | -122.2835979 | 37.7778323 | 33.77 | 66.35 | 65-70% |
| 6037115301 | 4156 | Los Angeles | 91324 | Northridge | -118.548089 | 34.2422846 | 33.77 | 66.34 | 65-70% |
| 6059042312 | 9085 | Orange | 92675 | San Juan Capistrano | -117.6617306 | 33.5069398 | 33.77 | 66.33 | 65-70% |
| 6115040301 | 3366 | Yuba | 95901 | Marysville | -121.5380858 | 39.1329043 | 33.76 | 66.31 | 65-70% |
| 6001427300 | 4896 | Alameda | 94501 | Alameda | -122.2662775 | 37.7810489 | 33.76 | 66.30 | 65-70% |
| 6037301501 | 1902 | Los Angeles | 91201 | Glendale | -118.2869319 | 34.1752478 | 33.75 | 66.29 | 65-70% |
| 6099000102 | 3869 | Stanislaus | 95361 | Oakdale | -120.7315696 | 37.7731119 | 33.75 | 66.28 | 65-70% |
| 6019005805 | 3798 | Fresno | 93727 | Fresno | -119.6805734 | 36.7685213 | 33.75 | 66.26 | 65-70% |
| 6067001200 | 3323 | Sacramento | 95814 | Sacramento | -121.4870807 | 38.5716422 | 33.75 | 66.25 | 65-70% |
| 6037701902 | 4016 | Los Angeles | 90401 | Santa Monica | -118.4951703 | 34.012479 | 33.74 | 66.24 | 65-70% |
| 6013302006 | 3779 | Contra Costa | 94561 | Oakley | -121.7134904 | 38.0217527 | 33.72 | 66.23 | 65-70% |
| 6073013206 | 6544 | San Diego | 91911 | Chula Vista | -117.0722501 | 32.5991876 | 33.71 | 66.21 | 65-70% |
| 6025011700 | 4797 | Imperial | 92243 | El Centro | -115.5571432 | 32.7775979 | 33.70 | 66.20 | 65-70% |
| 6013367200 | 5171 | Contra Costa | 94806 | San Pablo | -122.3354534 | 37.9659307 | 33.69 | 66.19 | 65-70% |
| 6067003000 | 6563 | Sacramento | 95820 | Sacramento | -121.4295972 | 38.5358637 | 33.69 | 66.17 | 65-70% |
| 6037408135 | 4159 | Los Angeles | 91792 | West Covina | -117.8977913 | 34.016144 | 33.67 | 66.16 | 65-70% |
| 6037700101 | 5232 | Los Angeles | 90046 | Los Angeles | -118.3524483 | 34.0925747 | 33.66 | 66.15 | 65-70% |
| 6065043216 | 6495 | Riverside | 92591 | Temecula | -117.1477073 | 33.5170351 | 33.66 | 66.14 | 65-70% |
| 6095251100 | 3271 | Solano | 94590 | Vallejo | -122.2365223 | 38.0969602 | 33.65 | 66.12 | 65-70% |
| 6071012104 | 5110 | San Bernardino | 92356 | Lucerne Valley | -116.958778 | 34.636683 | 33.64 | 66.11 | 65-70% |
| 6037201110 | 2574 | Los Angeles | 90032 | Los Angeles | -118.1743334 | 34.0948042 | 33.63 | 66.10 | 65-70% |
| 6037482101 | 4568 | Los Angeles | 91754 | Monterey Park | -118.1353858 | 34.0587488 | 33.62 | 66.09 | 65-70% |
| 6101050101 | 6438 | Sutter | 95991 | Yuba City | -121.6237303 | 39.158005 | 33.62 | 66.07 | 65-70% |
| 6001437102 | 4251 | Alameda | 94545 | Hayward | -122.1002746 | 37.6298655 | 33.60 | 66.06 | 65-70% |
| 6111007611 | 4375 | Ventura | 93021 | Moorpark | -118.8899164 | 34.2815484 | 33.60 | 66.05 | 65-70% |
| 6037482521 | 5754 | Los Angeles | 91770 | Rosemead | -118.1001251 | 34.0502444 | 33.60 | 66.04 | 65-70% |
| 6013373000 | 4376 | Contra Costa | 94801 | Richmond | -122.3538132 | 37.9476192 | 33.60 | 66.02 | 65-70% |
| 6073020018 | 7708 | San Diego | 92078 | San Marcos | -117.2062594 | 33.1499789 | 33.58 | 66.01 | 65-70% |
| 6019004902 | 1985 | Fresno | 93704 | Fresno | -119.807449 | 36.7894606 | 33.56 | 66.00 | 65-70% |
| 6037406901 | 4701 | Los Angeles | 91746 | La Puente | -117.9698642 | 34.058781 | 33.56 | 65.99 | 65-70% |
| 6099000806 | 4231 | Stanislaus | 95350 | Modesto | -121.0220677 | 37.685664 | 33.55 | 65.97 | 65-70% |
| 6019004601 | 2641 | Fresno | 93705 | Fresno | -119.8253921 | 36.8031545 | 33.55 | 65.96 | 65-70% |
| 6073010109 | 4595 | San Diego | 92154 | San Diego | -117.0884184 | 32.5494881 | 33.53 | 65.95 | 65-70% |
| 6037405301 | 3349 | Los Angeles | 91722 | Covina | -117.937833 | 34.085166 | 33.53 | 65.94 | 65-70% |
| 6059075812 | 6573 | Orange | 92867 | Orange | -117.8287478 | 33.8079668 | 33.52 | 65.92 | 65-70% |
| 6071000808 | 5840 | San Bernardino | 91786 | Upland | -117.6396784 | 34.1124251 | 33.52 | 65.91 | 65-70% |
| 6037670003 | 5788 | Los Angeles | 90717 | Lomita | -118.3227742 | 33.7964591 | 33.51 | 65.90 | 65-70% |
| 6037211921 | 2474 | Los Angeles | 90020 | Los Angeles | -118.292902 | 34.067232 | 33.50 | 65.88 | 65-70% |
| 6037236000 | 4113 | Los Angeles | 90008 | Los Angeles | -118.3623219 | 34.0122748 | 33.48 | 65.87 | 65-70% |
| 6001437300 | 3111 | Alameda | 94545 | Hayward | -122.0930122 | 37.6362205 | 33.48 | 65.86 | 65-70% |
| 6001436300 | 7129 | Alameda | 94541 | Hayward | -122.0917198 | 37.666274 | 33.48 | 65.85 | 65-70% |
| 6037271200 | 2525 | Los Angeles | 90064 | Los Angeles | -118.4420039 | 34.0313917 | 33.47 | 65.83 | 65-70% |
| 6115040200 | 7767 | Yuba | 95901 | Marysville | -121.5739716 | 39.158116 | 33.45 | 65.82 | 65-70% |
| 6037910402 | 3751 | Los Angeles | 93550 | Palmdale | -118.1256195 | 34.5834908 | 33.45 | 65.81 | 65-70% |
| 6067006002 | 4624 | Sacramento | 95821 | Sacramento | -121.3737809 | 38.6158347 | 33.44 | 65.80 | 65-70% |
| 6001405302 | 2530 | Alameda | 94606 | Oakland | -122.2542495 | 37.7985014 | 33.44 | 65.78 | 65-70% |
| 6075026402 | 4118 | San Francisco | 94134 | San Francisco | -122.403256 | 37.7164873 | 33.44 | 65.77 | 65-70% |
| 6037201401 | 4803 | Los Angeles | 90032 | Los Angeles | -118.1854971 | 34.078195 | 33.44 | 65.76 | 65-70% |
| 6029001101 | 4413 | Kern | 93306 | Bakersfield | -118.9226708 | 35.3682609 | 33.43 | 65.75 | 65-70% |
| 6073016301 | 4919 | San Diego | 92020 | El Cajon | -116.9564885 | 32.8030833 | 33.43 | 65.73 | 65-70% |
| 6037183520 | 3881 | Los Angeles | 90042 | Los Angeles | -118.2015849 | 34.1109412 | 33.43 | 65.72 | 65-70% |
| 6059088801 | 8343 | Orange | 92844 | Garden Grove | -117.9773595 | 33.7711174 | 33.42 | 65.71 | 65-70% |
| 6111004901 | 6249 | Ventura | 93030 | Oxnard | -119.1527473 | 34.2125244 | 33.42 | 65.70 | 65-70% |
| 6001436500 | 4583 | Alameda | 94542 | Hayward | -122.0691461 | 37.6586897 | 33.42 | 65.68 | 65-70% |
| 6073013308 | 3731 | San Diego | 91911 | Chula Vista | -117.0490687 | 32.591757 | 33.42 | 65.67 | 65-70% |
| 6073013306 | 4773 | San Diego | 91911 | Chula Vista | -117.0400229 | 32.6036598 | 33.40 | 65.66 | 65-70% |
| 6073013204 | 4014 | San Diego | 91911 | Chula Vista | -117.0637049 | 32.5982825 | 33.40 | 65.65 | 65-70% |
| 6037543701 | 2994 | Los Angeles | 90745 | Carson | -118.269697 | 33.8216408 | 33.40 | 65.63 | 65-70% |
| 6077003210 | 2800 | San Joaquin | 95209 | Stockton | -121.3465815 | 38.0330943 | 33.40 | 65.62 | 65-70% |
| 6059074805 | 5962 | Orange | 92704 | Santa Ana | -117.9026546 | 33.7371732 | 33.39 | 65.61 | 65-70% |
| 6037550700 | 6921 | Los Angeles | 90240 | Downey | -118.1314443 | 33.9642238 | 33.39 | 65.59 | 65-70% |
| 6065040404 | 3309 | Riverside | 92509 | Riverside | -117.4613234 | 33.9729183 | 33.39 | 65.58 | 65-70% |
| 6001410100 | 2406 | Alameda | 94605 | Oakland | -122.1535285 | 37.7478642 | 33.38 | 65.57 | 65-70% |
| 6071000503 | 5270 | San Bernardino | 91710 | Chino | -117.7067276 | 34.0153204 | 33.38 | 65.56 | 65-70% |
| 6007001100 | 4572 | Butte | 95928 | Chico | -121.8514478 | 39.711661 | 33.38 | 65.54 | 65-70% |
| 6111008700 | 6424 | Ventura | 93030 | Oxnard | -119.1860277 | 34.202819 | 33.37 | 65.53 | 65-70% |
| 6065040615 | 9024 | Riverside | 91752 | Mira Loma | -117.5548004 | 33.9688013 | 33.36 | 65.52 | 65-70% |
| 6037900602 | 5214 | Los Angeles | 93535 | Lancaster | -118.1210674 | 34.7114455 | 33.36 | 65.51 | 65-70% |
| 6067003600 | 2826 | Sacramento | 95820 | Sacramento | -121.477878 | 38.5327553 | 33.36 | 65.49 | 65-70% |
| 6081602400 | 6679 | San Mateo | 94080 | South San Francisco | -122.4358138 | 37.644487 | 33.35 | 65.48 | 65-70% |
| 6037577602 | 3441 | Los Angeles | 90803 | Long Beach | -118.1126708 | 33.7700579 | 33.35 | 65.47 | 65-70% |
| 6037650101 | 5831 | Los Angeles | 90504 | Torrance | -118.3164997 | 33.8681429 | 33.33 | 65.46 | 65-70% |
| 6013378000 | 3435 | Contra Costa | 94801 | Richmond | -122.404809 | 37.9448245 | 33.33 | 65.44 | 65-70% |
| 6059074111 | 5568 | Orange | 92704 | Santa Ana | -117.8928808 | 33.7090417 | 33.32 | 65.43 | 65-70% |
| 6095251200 | 3061 | Solano | 94590 | Vallejo | -122.2365335 | 38.1052893 | 33.32 | 65.42 | 65-70% |
| 6037216200 | 4911 | Los Angeles | 90019 | Los Angeles | -118.3482415 | 34.0571243 | 33.31 | 65.41 | 65-70% |
| 6037275500 | 5207 | Los Angeles | 90230 | Culver City | -118.4148705 | 33.9918105 | 33.30 | 65.39 | 65-70% |
| 6037125600 | 2657 | Los Angeles | 91601 | North Hollywood | -118.3568613 | 34.1578941 | 33.28 | 65.38 | 65-70% |
| 6065041909 | 4990 | Riverside | 92881 | Corona | -117.522205 | 33.8381856 | 33.28 | 65.37 | 65-70% |
| 6037297202 | 3423 | Los Angeles | 90731 | San Pedro | -118.2990073 | 33.7247349 | 33.27 | 65.36 | 65-70% |
| 6065042403 | 4071 | Riverside | 92557 | Moreno Valley | -117.2207856 | 33.9488477 | 33.27 | 65.34 | 65-70% |
| 6059001506 | 4109 | Orange | 92821 | Brea | -117.8881656 | 33.938738 | 33.27 | 65.33 | 65-70% |
| 6067004202 | 5538 | Sacramento | 95822 | Sacramento | -121.4862812 | 38.4884205 | 33.26 | 65.32 | 65-70% |
| 6037500800 | 5470 | Los Angeles | 90660 | Pico Rivera | -118.0861015 | 33.9831987 | 33.26 | 65.30 | 65-70% |
| 6065042401 | 2082 | Riverside | 92555 | Moreno Valley | -117.1429211 | 33.9523161 | 33.24 | 65.29 | 65-70% |
| 6037211500 | 4355 | Los Angeles | 90004 | Los Angeles | -118.3152596 | 34.0724565 | 33.23 | 65.28 | 65-70% |
| 6077004001 | 2508 | San Joaquin | 95242 | Lodi | -121.4633246 | 38.1304593 | 33.21 | 65.27 | 65-70% |
| 6059099803 | 5762 | Orange | 92683 | Westminster | -117.9809384 | 33.755705 | 33.20 | 65.25 | 65-70% |
| 6065040808 | 7008 | Riverside | 92880 | Corona | -117.5770354 | 33.8991933 | 33.20 | 65.24 | 65-70% |
| 6037482202 | 5229 | Los Angeles | 91755 | Monterey Park | -118.1124273 | 34.0589573 | 33.19 | 65.23 | 65-70% |
| 6083002402 | 11406 | Santa Barbara | 93455 | Santa Maria | -120.4780833 | 34.9287963 | 33.17 | 65.22 | 65-70% |
| 6099000403 | 4317 | Stanislaus | 95357 | Modesto | -120.9672353 | 37.6999824 | 33.16 | 65.20 | 65-70% |
| 6059075811 | 3332 | Orange | 92867 | Orange | -117.8298347 | 33.8180866 | 33.16 | 65.19 | 65-70% |
| 6111000200 | 2822 | Ventura | 93015 | Fillmore | -118.7690795 | 34.4146679 | 33.16 | 65.18 | 65-70% |
| 6071009910 | 4653 | San Bernardino | 92392 | Victorville | -117.3407007 | 34.4902623 | 33.14 | 65.17 | 65-70% |
| 6037431001 | 7171 | Los Angeles | 91016 | Monrovia | -118.0051354 | 34.1484127 | 33.13 | 65.15 | 65-70% |
| 6071001901 | 5753 | San Bernardino | 91710 | Chino | -117.6630434 | 34.0083628 | 33.12 | 65.14 | 65-70% |
| 6045011600 | 5802 | Mendocino | 95482 | Ukiah | -123.202651 | 39.1357597 | 33.11 | 65.13 | 65-70% |
| 6001438204 | 5368 | Alameda | 94544 | Hayward | -122.0596258 | 37.6270608 | 33.11 | 65.12 | 65-70% |
| 6095251902 | 5833 | Solano | 94589 | Vallejo | -122.244108 | 38.1480354 | 33.11 | 65.10 | 65-70% |
| 6081604101 | 7993 | San Mateo | 94066 | San Bruno | -122.410087 | 37.6236 | 33.10 | 65.09 | 65-70% |
| 6037703200 | 5629 | Los Angeles | 90043 | Los Angeles | -118.3401633 | 33.9985885 | 33.09 | 65.08 | 65-70% |
| 6037207710 | 2490 | Los Angeles | 90017 | Los Angeles | -118.2616851 | 34.0468661 | 33.08 | 65.06 | 65-70% |
| 6037462201 | 3788 | Los Angeles | 91101 | Pasadena | -118.1369525 | 34.1548928 | 33.06 | 65.05 | 65-70% |
| 6037102107 | 3851 | Los Angeles | 91040 | Sunland | -118.3395158 | 34.2409055 | 33.06 | 65.04 | 65-70% |
| 6037109603 | 4252 | Los Angeles | 91345 | Mission Hills | -118.4654157 | 34.2536518 | 33.04 | 65.03 | 65-70% |
| 6059074702 | 6316 | Orange | 92707 | Santa Ana | -117.8825445 | 33.7308103 | 33.02 | 65.01 | 65-70% |
| 6065043503 | 4112 | Riverside | 92545 | Hemet | -117.0000447 | 33.7461748 | 33.01 | 65.00 | 65-70% |
| 6107000702 | 5391 | Tulare | 93286 | Woodlake | -119.10036 | 36.4201875 | 33.01 | 64.99 | 60-65% |
| 6029005201 | 5397 | Kern | 93285 | Wofford Heights | -118.5033077 | 35.6862875 | 33.01 | 64.98 | 60-65% |
| 6065043008 | 5394 | Riverside | 92530 | Lake Elsinore | -117.4175996 | 33.6671773 | 33.00 | 64.96 | 60-65% |
| 6001435104 | 5216 | Alameda | 94544 | Hayward | -122.038971 | 37.6385981 | 33.00 | 64.95 | 60-65% |
| 6059076101 | 8933 | Orange | 92868 | Orange | -117.8772222 | 33.795275 | 33.00 | 64.94 | 60-65% |
| 6053010400 | 6481 | Monterey | 95012 | Castroville | -121.7533738 | 36.764838 | 33.00 | 64.93 | 60-65% |
| 6107001006 | 5765 | Tulare | 93291 | Visalia | -119.3323771 | 36.3331465 | 33.00 | 64.91 | 60-65% |
| 6055200203 | 2497 | Napa | 94559 | Napa | -122.2891839 | 38.2870988 | 32.99 | 64.90 | 60-65% |
| 6037600911 | 3349 | Los Angeles | 90302 | Inglewood | -118.3522115 | 33.9786571 | 32.99 | 64.89 | 60-65% |
| 6013371000 | 5316 | Contra Costa | 94805 | Richmond | -122.3299744 | 37.9401338 | 32.99 | 64.88 | 60-65% |
| 6059088502 | 5249 | Orange | 92840 | Garden Grove | -117.9171462 | 33.7788137 | 32.99 | 64.86 | 60-65% |
| 6077004203 | 3883 | San Joaquin | 95240 | Lodi | -121.2785027 | 38.1423442 | 32.98 | 64.85 | 60-65% |
| 6037269602 | 3252 | Los Angeles | 90034 | Los Angeles | -118.384482 | 34.0432688 | 32.98 | 64.84 | 60-65% |
| 6037103200 | 6150 | Los Angeles | 91040 | Sunland | -118.3402287 | 34.2733521 | 32.97 | 64.83 | 60-65% |
| 6071002036 | 11640 | San Bernardino | 91730 | Rancho Cucamonga | -117.5607306 | 34.1118416 | 32.96 | 64.81 | 60-65% |
| 6037212102 | 2446 | Los Angeles | 90010 | Los Angeles | -118.2984976 | 34.0635726 | 32.94 | 64.80 | 60-65% |
| 6001407102 | 4351 | Alameda | 94601 | Oakland | -122.2102385 | 37.7807761 | 32.93 | 64.79 | 60-65% |
| 6037201120 | 4097 | Los Angeles | 90032 | Los Angeles | -118.1636768 | 34.0949515 | 32.93 | 64.77 | 60-65% |
| 6037481300 | 3153 | Los Angeles | 91770 | Rosemead | -118.0825326 | 34.0762772 | 32.92 | 64.76 | 60-65% |
| 6001442800 | 2816 | Alameda | 94538 | Fremont | -121.9931032 | 37.5293622 | 32.92 | 64.75 | 60-65% |
| 6071008404 | 2729 | San Bernardino | 92374 | Redlands | -117.1651325 | 34.0591972 | 32.91 | 64.74 | 60-65% |
| 6037320100 | 7144 | Los Angeles | 91340 | San Fernando | -118.4273952 | 34.2948569 | 32.91 | 64.72 | 60-65% |
| 6077003111 | 3754 | San Joaquin | 95207 | Stockton | -121.3245319 | 37.9941419 | 32.90 | 64.71 | 60-65% |
| 6037134901 | 3069 | Los Angeles | 91335 | Reseda | -118.5606591 | 34.1873507 | 32.90 | 64.70 | 60-65% |
| 6037920312 | 5268 | Los Angeles | 91321 | Newhall | -118.5258812 | 34.3629821 | 32.89 | 64.69 | 60-65% |
| 6031001200 | 2507 | Kings | 93230 | Hanford | -119.6239493 | 36.2324904 | 32.89 | 64.67 | 60-65% |
| 6037203800 | 4589 | Los Angeles | 90063 | Los Angeles | -118.1955756 | 34.0449856 | 32.88 | 64.66 | 60-65% |
| 6037650200 | 5783 | Los Angeles | 90504 | Torrance | -118.3318531 | 33.8628067 | 32.87 | 64.65 | 60-65% |
| 6069000502 | 6099 | San Benito | 95023 | Hollister | -121.3840211 | 36.8531984 | 32.86 | 64.64 | 60-65% |
| 6085501200 | 4186 | Santa Clara | 95112 | San Jose | -121.8787471 | 37.3465601 | 32.86 | 64.62 | 60-65% |
| 6077003215 | 3855 | San Joaquin | 95219 | Stockton | -121.3879989 | 38.0297286 | 32.86 | 64.61 | 60-65% |
| 6019004503 | 4723 | Fresno | 93704 | Fresno | -119.8083215 | 36.8299344 | 32.85 | 64.60 | 60-65% |
| 6073010103 | 5569 | San Diego | 92154 | San Diego | -117.0958327 | 32.5996184 | 32.85 | 64.59 | 60-65% |
| 6073016502 | 6915 | San Diego | 92021 | El Cajon | -116.9431653 | 32.8145361 | 32.83 | 64.57 | 60-65% |
| 6019005302 | 5208 | Fresno | 93726 | Fresno | -119.7677716 | 36.8049491 | 32.82 | 64.56 | 60-65% |
| 6037134304 | 2882 | Los Angeles | 91304 | Canoga Park | -118.6102868 | 34.213933 | 32.82 | 64.55 | 60-65% |
| 6101050702 | 6205 | Sutter | 95953 | Live Oak | -121.6942945 | 39.241136 | 32.81 | 64.54 | 60-65% |
| 6065041301 | 3473 | Riverside | 92505 | Riverside | -117.4846527 | 33.9292791 | 32.80 | 64.52 | 60-65% |
| 6061020901 | 2605 | Placer | 95678 | Roseville | -121.293307 | 38.7382 | 32.79 | 64.51 | 60-65% |
| 6037117302 | 4914 | Los Angeles | 91343 | North Hills | -118.4987424 | 34.238143 | 32.79 | 64.50 | 60-65% |
| 6029003122 | 8845 | Kern | 93307 | Bakersfield | -119.0121407 | 35.3031439 | 32.79 | 64.48 | 60-65% |
| 6075017802 | 4516 | San Francisco | 94103 | San Francisco | -122.4087033 | 37.7760649 | 32.78 | 64.47 | 60-65% |
| 6065041906 | 6360 | Riverside | 92882 | Corona | -117.5971368 | 33.870484 | 32.77 | 64.46 | 60-65% |
| 6111004503 | 4387 | Ventura | 93033 | Oxnard | -119.1735081 | 34.1517695 | 32.76 | 64.45 | 60-65% |
| 6029005900 | 3589 | Kern | 93501 | Mojave | -118.1693413 | 35.0539688 | 32.75 | 64.43 | 60-65% |
| 6059074408 | 5399 | Orange | 92780 | Tustin | -117.8366401 | 33.7377146 | 32.75 | 64.42 | 60-65% |
| 6107002203 | 4363 | Tulare | 93274 | Tulare | -119.3755912 | 36.2182393 | 32.74 | 64.41 | 60-65% |
| 6047000602 | 3550 | Merced | 95301 | Atwater | -120.6034458 | 37.3564573 | 32.73 | 64.40 | 60-65% |
| 6007002500 | 4930 | Butte | 95965 | Oroville | -121.5372499 | 39.5808681 | 32.72 | 64.38 | 60-65% |
| 6037131600 | 5494 | Los Angeles | 91335 | Reseda | -118.551356 | 34.214718 | 32.71 | 64.37 | 60-65% |
| 6037124903 | 3262 | Los Angeles | 91607 | Valley Village | -118.4008675 | 34.1666099 | 32.71 | 64.36 | 60-65% |
| 6059001901 | 2810 | Orange | 92833 | Fullerton | -117.9637238 | 33.8637759 | 32.71 | 64.35 | 60-65% |
| 6073012102 | 3279 | San Diego | 91950 | National City | -117.0785905 | 32.6703501 | 32.70 | 64.33 | 60-65% |
| 6095252605 | 5520 | Solano | 94533 | Fairfield | -122.0396821 | 38.2655647 | 32.69 | 64.32 | 60-65% |
| 6065046101 | 3060 | Riverside | 92225 | Blythe | -114.5838963 | 33.6142234 | 32.69 | 64.31 | 60-65% |
| 6029005802 | 7379 | Kern | 93560 | Rosamond | -118.1560393 | 34.8581565 | 32.69 | 64.30 | 60-65% |
| 6085503402 | 5263 | Santa Clara | 95122 | San Jose | -121.8346802 | 37.3256266 | 32.67 | 64.28 | 60-65% |
| 6065043900 | 6405 | Riverside | 92223 | Beaumont | -116.9742932 | 33.9397208 | 32.64 | 64.27 | 60-65% |
| 6037430901 | 4324 | Los Angeles | 91016 | Monrovia | -118.0115108 | 34.1416685 | 32.64 | 64.26 | 60-65% |
| 6025010600 | 6998 | Imperial | 92227 | Brawley | -115.5527364 | 32.9645537 | 32.63 | 64.25 | 60-65% |
| 6077003213 | 4571 | San Joaquin | 95209 | Stockton | -121.3533471 | 38.0354834 | 32.63 | 64.23 | 60-65% |
| 6069000701 | 3644 | San Benito | 95023 | Hollister | -121.4198016 | 36.8474941 | 32.62 | 64.22 | 60-65% |
| 6037703100 | 5446 | Los Angeles | 90043 | Los Angeles | -118.3546187 | 33.9930805 | 32.61 | 64.21 | 60-65% |
| 6085503306 | 4311 | Santa Clara | 95122 | San Jose | -121.822135 | 37.3314079 | 32.60 | 64.19 | 60-65% |
| 6037125100 | 5431 | Los Angeles | 91607 | Valley Village | -118.3921251 | 34.1648811 | 32.60 | 64.18 | 60-65% |
| 6095251000 | 2470 | Solano | 94590 | Vallejo | -122.2485415 | 38.1011243 | 32.59 | 64.17 | 60-65% |
| 6065042407 | 3262 | Riverside | 92557 | Moreno Valley | -117.2395682 | 33.9539269 | 32.59 | 64.16 | 60-65% |
| 6065045900 | 1838 | Riverside | 92225 | Blythe | -114.6691382 | 33.5281628 | 32.58 | 64.14 | 60-65% |
| 6059087601 | 4808 | Orange | 92802 | Anaheim | -117.941414 | 33.8142414 | 32.57 | 64.13 | 60-65% |
| 6037604002 | 5078 | Los Angeles | 90260 | Lawndale | -118.3569295 | 33.8765977 | 32.57 | 64.12 | 60-65% |
| 6071010700 | 3798 | San Bernardino | 92363 | Needles | -114.6750382 | 34.8240667 | 32.57 | 64.11 | 60-65% |
| 6099000912 | 17129 | Stanislaus | 95355 | Modesto | -120.9376668 | 37.6796323 | 32.56 | 64.09 | 60-65% |
| 6099002603 | 2906 | Stanislaus | 95307 | Ceres | -120.9524211 | 37.601847 | 32.56 | 64.08 | 60-65% |
| 6037113233 | 6655 | Los Angeles | 91304 | Canoga Park | -118.6012203 | 34.2269621 | 32.55 | 64.07 | 60-65% |
| 6065041403 | 2763 | Riverside | 92503 | Riverside | -117.4611828 | 33.8973389 | 32.55 | 64.06 | 60-65% |
| 6037460900 | 6998 | Los Angeles | 91103 | Pasadena | -118.1602397 | 34.1761857 | 32.53 | 64.04 | 60-65% |
| 6037106405 | 3966 | Los Angeles | 91342 | Sylmar | -118.4482929 | 34.3146809 | 32.53 | 64.03 | 60-65% |
| 6059088903 | 8585 | Orange | 92843 | Garden Grove | -117.9447927 | 33.7535135 | 32.52 | 64.02 | 60-65% |
| 6037551501 | 4869 | Los Angeles | 90242 | Downey | -118.1608904 | 33.9373038 | 32.52 | 64.01 | 60-65% |
| 6037603006 | 2035 | Los Angeles | 90247 | Gardena | -118.304508 | 33.8909348 | 32.50 | 63.99 | 60-65% |
| 6037480901 | 4686 | Los Angeles | 91803 | Alhambra | -118.140161 | 34.0869807 | 32.50 | 63.98 | 60-65% |
| 6067003202 | 5052 | Sacramento | 95824 | Sacramento | -121.4335116 | 38.518459 | 32.49 | 63.97 | 60-65% |
| 6037543703 | 3472 | Los Angeles | 90745 | Carson | -118.2701989 | 33.8026513 | 32.49 | 63.96 | 60-65% |
| 6065046900 | 2043 | Riverside | 92239 | Desert Center | -115.3687419 | 33.7785595 | 32.49 | 63.94 | 60-65% |
| 6029004902 | 8349 | Kern | 93215 | Delano | -119.2321782 | 35.7830778 | 32.49 | 63.93 | 60-65% |
| 6065043822 | 2689 | Riverside | 92555 | Moreno Valley | -117.0687844 | 33.9243585 | 32.48 | 63.92 | 60-65% |
| 6059074103 | 5026 | Orange | 92707 | Santa Ana | -117.8809064 | 33.7217274 | 32.47 | 63.90 | 60-65% |
| 6077005406 | 3262 | San Joaquin | 95376 | Tracy | -121.4305428 | 37.7326916 | 32.46 | 63.89 | 60-65% |
| 6001409600 | 5063 | Alameda | 94621 | Oakland | -122.1726197 | 37.7532669 | 32.46 | 63.88 | 60-65% |
| 6107001301 | 8013 | Tulare | 93292 | Visalia | -119.2517367 | 36.3597158 | 32.45 | 63.87 | 60-65% |
| 6065043307 | 5872 | Riverside | 92543 | Hemet | -116.9786785 | 33.7246399 | 32.45 | 63.85 | 60-65% |
| 6103000700 | 7828 | Tehama | 96080 | Red Bluff | -122.2426817 | 40.1524476 | 32.44 | 63.84 | 60-65% |
| 6081610302 | 2108 | San Mateo | 94063 | Redwood City | -122.2076803 | 37.5128606 | 32.43 | 63.83 | 60-65% |

| | | | | | | | | |
|---|---|---|---|---|---|---|---|---|
| 6071002607 | 7826 | San Bernardino | 92337 | Fontana | -117.4512207 | 34.0404498 | 32.43 | 63.82 |
| 6067009319 | 4864 | Sacramento | 95828 | Sacramento | -121.4036544 | 38.4699141 | 32.41 | 63.80 |
| 6075026404 | 2851 | San Francisco | 94134 | San Francisco | -122.4152838 | 37.7096499 | 32.41 | 63.79 |
| 6059074407 | 6700 | Orange | 92705 | Santa Ana | -117.8422033 | 33.7378844 | 32.39 | 63.78 |
| 6065040609 | 8422 | Riverside | 92880 | Corona | -117.617809 | 33.9180425 | 32.38 | 63.77 |
| 6037293306 | 2189 | Los Angeles | 90710 | Harbor City | -118.3043557 | 33.7817852 | 32.37 | 63.75 |
| 6037211802 | 4192 | Los Angeles | 90010 | Los Angeles | -118.3047254 | 34.0635374 | 32.37 | 63.74 |
| 6065043308 | 2770 | Riverside | 92544 | Hemet | -116.9520967 | 33.7440141 | 32.35 | 63.73 |
| 6099003909 | 5980 | Stanislaus | 95382 | Turlock | -120.8607177 | 37.516714 | 32.35 | 63.72 |
| 6037269905 | 2423 | Los Angeles | 90034 | Los Angeles | -118.4018807 | 34.0218574 | 32.33 | 63.70 |
| 6053000800 | 5628 | Monterey | 93905 | Salinas | -121.6146898 | 36.6748899 | 32.33 | 63.69 |
| 6067009004 | 3878 | Sacramento | 95827 | Sacramento | -121.3260509 | 38.5669269 | 32.32 | 63.68 |
| 6075017700 | 2128 | San Francisco | 94103 | San Francisco | -122.4124868 | 37.7680392 | 32.31 | 63.67 |
| 6085501402 | 2947 | Santa Clara | 95116 | San Jose | -121.8664264 | 37.3453849 | 32.31 | 63.65 |
| 6065042723 | 5506 | Riverside | 92545 | Hemet | -117.078378 | 33.7246687 | 32.30 | 63.64 |
| 6093000900 | 7231 | Siskiyou | 96094 | Weed | -122.427147 | 41.4800873 | 32.30 | 63.63 |
| 6037199110 | 2710 | Los Angeles | 90032 | Los Angeles | -118.197404 | 34.0793615 | 32.29 | 63.61 |
| 6059087602 | 7722 | Orange | 92802 | Anaheim | -117.9399623 | 33.804469 | 32.29 | 63.60 |
| 6037195300 | 3203 | Los Angeles | 90027 | Los Angeles | -118.2836893 | 34.0992506 | 32.27 | 63.59 |
| 6001436800 | 4027 | Alameda | 94544 | Hayward | -122.0944503 | 37.6535732 | 32.26 | 63.58 |
| 6037408134 | 2743 | Los Angeles | 91792 | West Covina | -117.8980812 | 34.0224507 | 32.24 | 63.56 |

| | | | | | | | | | |
|---|---|---|---|---|---|---|---|---|---|
| 6053014302 | 4024 | Monterey | 93908 | Salinas | -121.771688 | 36.7093536 | 30.81 | 61.03 | 60-65% | No |
| 6013307205 | 6595 | Contra Costa | 94509 | Antioch | -121.829459 | 37.9860073 | 30.81 | 61.02 | 60-65% | No |
| 6087110100 | 7466 | Santa Cruz | 95076 | Watsonville | -121.7415569 | 36.9224854 | 30.81 | 61.00 | 60-65% | No |
| 6037125401 | 4024 | Los Angeles | 91601 | North Hollywood | -118.3743046 | 34.1626066 | 30.81 | 60.99 | 60-65% | No |
| 6037408003 | 4992 | Los Angeles | 91792 | West Covina | -117.9154705 | 34.0455304 | 30.80 | 60.98 | 60-65% | No |
| 6011000500 | 2565 | Colusa | 95932 | Colusa | -121.9636465 | 39.314744 | 30.79 | 60.97 | 60-65% | No |
| 6037109601 | 5020 | Los Angeles | 91345 | Mission Hills | -118.4495333 | 34.2593157 | 30.79 | 60.95 | 60-65% | No |
| 6001433103 | 3530 | Alameda | 94578 | San Leandro | -122.139054 | 37.7093273 | 30.78 | 60.94 | 60-65% | No |
| 6037102104 | 3648 | Los Angeles | 91352 | Sun Valley | -118.3454041 | 34.2161866 | 30.75 | 60.93 | 60-65% | No |
| 6071008704 | 7789 | San Bernardino | 92399 | Yucaipa | -117.0713358 | 34.0195359 | 30.74 | 60.92 | 60-65% | No |
| 6095250601 | 4695 | Solano | 94591 | Vallejo | -122.225778 | 38.0820079 | 30.74 | 60.90 | 60-65% | No |
| 6071007409 | 5760 | San Bernardino | 92346 | Highland | -117.2108858 | 34.1248922 | 30.74 | 60.89 | 60-65% | No |
| 6073002402 | 5254 | San Diego | 92105 | San Diego | -117.1052315 | 32.7468137 | 30.71 | 60.88 | 60-65% | No |
| 6065043404 | 2544 | Riverside | 92543 | Hemet | -116.9826738 | 33.7376041 | 30.71 | 60.87 | 60-65% | No |
| 6037403722 | 5734 | Los Angeles | 91724 | Covina | -117.8721406 | 34.0881832 | 30.70 | 60.85 | 60-65% | No |
| 6001408700 | 7207 | Alameda | 94605 | Oakland | -122.1889435 | 37.7688611 | 30.69 | 60.84 | 60-65% | No |
| 6059099247 | 3287 | Orange | 92704 | Santa Ana | -117.9331 | 33.7416273 | 30.69 | 60.83 | 60-65% | No |
| 6037189904 | 2260 | Los Angeles | 90046 | Los Angeles | -118.3467929 | 34.0997191 | 30.68 | 60.81 | 60-65% | No |
| 6065042402 | 4780 | Riverside | 92555 | Moreno Valley | -117.2040032 | 33.9455386 | 30.66 | 60.80 | 60-65% | No |
| 6071004504 | 8145 | San Bernardino | 92407 | San Bernardino | -117.3430154 | 34.1940209 | 30.66 | 60.79 | 60-65% | No |
| 6089011002 | 5324 | Shasta | 96001 | Redding | -122.3976532 | 40.5381994 | 30.66 | 60.78 | 60-65% | No |
| 6037269800 | 3458 | Los Angeles | 90034 | Los Angeles | -118.3968111 | 34.032045 | 30.65 | 60.76 | 60-65% | No |
| 6037408505 | 2682 | Los Angeles | 91745 | Hacienda Heights | -117.9799936 | 34.0021077 | 30.65 | 60.75 | 60-65% | No |
| 6007000603 | 3130 | Butte | 95926 | Chico | -121.8495875 | 39.7368942 | 30.64 | 60.74 | 60-65% | No |
| 6073020601 | 5560 | San Diego | 92025 | Escondido | -117.0779507 | 33.1142976 | 30.63 | 60.73 | 60-65% | No |
| 6001425101 | 1596 | Alameda | 94608 | Emeryville | -122.3061755 | 37.8381928 | 30.63 | 60.71 | 60-65% | No |
| 6085503212 | 4058 | Santa Clara | 95121 | San Jose | -121.8288535 | 37.3046588 | 30.63 | 60.70 | 60-65% | No |
| 6037113301 | 2201 | Los Angeles | 91324 | Northridge | -118.5583429 | 34.2440427 | 30.62 | 60.69 | 60-65% | No |
| 6037572002 | 4409 | Los Angeles | 90807 | Long Beach | -118.191637 | 33.8230804 | 30.62 | 60.68 | 60-65% | No |
| 6037311400 | 2274 | Los Angeles | 91505 | Burbank | -118.349317 | 34.1622732 | 30.61 | 60.66 | 60-65% | No |
| 6037214800 | 2573 | Los Angeles | 90048 | Los Angeles | -118.3730515 | 34.0713896 | 30.60 | 60.65 | 60-65% | No |
| 6037602302 | 3477 | Los Angeles | 90250 | Hawthorne | -118.3742902 | 33.9051125 | 30.60 | 60.64 | 60-65% | No |
| 6085512506 | 6686 | Santa Clara | 95020 | Gilroy | -121.5817971 | 37.0230024 | 30.60 | 60.63 | 60-65% | No |
| 6037311600 | 7249 | Los Angeles | 91505 | Burbank | -118.3390315 | 34.1531211 | 30.59 | 60.61 | 60-65% | No |
| 6081612100 | 7041 | San Mateo | 94303 | Palo Alto | -122.1439038 | 37.459103 | 30.58 | 60.60 | 60-65% | No |
| 6047000702 | 4903 | Merced | 95301 | Atwater | -120.6072647 | 37.3229826 | 30.56 | 60.59 | 60-65% | No |
| 6037702801 | 5205 | Los Angeles | 90232 | Culver City | -118.4102008 | 34.0114522 | 30.55 | 60.58 | 60-65% | No |
| 6001424002 | 2172 | Alameda | 94702 | Berkeley | -122.2815989 | 37.8504976 | 30.55 | 60.56 | 60-65% | No |
| 6067001900 | 2771 | Sacramento | 95818 | Sacramento | -121.4773744 | 38.5618891 | 30.55 | 60.55 | 60-65% | No |
| 6067003203 | 3200 | Sacramento | 95824 | Sacramento | -121.4182262 | 38.513306 | 30.54 | 60.54 | 60-65% | No |
| 6059088104 | 4780 | Orange | 90680 | Stanton | -117.9915613 | 33.7847458 | 30.53 | 60.52 | 60-65% | No |
| 6071002304 | 18904 | San Bernardino | 92336 | Fontana | -117.4712111 | 34.1357381 | 30.50 | 60.51 | 60-65% | No |
| 6073010402 | 5558 | San Diego | 91932 | Imperial Beach | -117.1057746 | 32.5727796 | 30.50 | 60.50 | 60-65% | No |
| 6037408137 | 4152 | Los Angeles | 91792 | West Covina | -117.8838337 | 34.0084495 | 30.50 | 60.49 | 60-65% | No |
| 6037106406 | 4962 | Los Angeles | 91342 | Sylmar | -118.4590006 | 34.3228508 | 30.49 | 60.47 | 60-65% | No |
| 6071011203 | 1593 | San Bernardino | 92315 | Big Bear Lake | -116.8823112 | 34.2507714 | 30.48 | 60.46 | 60-65% | No |
| 6065043602 | 3953 | Riverside | 92583 | San Jacinto | -116.9662949 | 33.7875282 | 30.47 | 60.45 | 60-65% | No |
| 6037900504 | 5816 | Los Angeles | 93535 | Lancaster | -118.1025822 | 34.663965 | 30.47 | 60.44 | 60-65% | No |
| 6001405700 | 3243 | Alameda | 94606 | Oakland | -122.2296737 | 37.7982307 | 30.46 | 60.42 | 60-65% | No |
| 6037185100 | 6295 | Los Angeles | 90065 | Los Angeles | -118.2103941 | 34.1048825 | 30.46 | 60.41 | 60-65% | No |
| 6065048901 | 3805 | Riverside | 92551 | Moreno Valley | -117.2130878 | 33.900986 | 30.46 | 60.40 | 60-65% | No |
| 6019003104 | 3810 | Fresno | 93727 | Fresno | -119.7157537 | 36.7809252 | 30.45 | 60.39 | 60-65% | No |
| 6073005400 | 7435 | San Diego | 92101 | San Diego | -117.1666546 | 32.7119409 | 30.45 | 60.37 | 60-65% | No |
| 6073003304 | 3563 | San Diego | 92102 | San Diego | -117.0902817 | 32.7067366 | 30.45 | 60.36 | 60-65% | No |
| 6099003604 | 8092 | Stanislaus | 95316 | Denair | -120.7482736 | 37.5227998 | 30.45 | 60.35 | 60-65% | No |
| 6037554103 | 1572 | Los Angeles | 90706 | Bellflower | -118.1201748 | 33.899698 | 30.44 | 60.34 | 60-65% | No |
| 6037430902 | 4652 | Los Angeles | 91016 | Monrovia | -118.0144844 | 34.1348189 | 30.44 | 60.32 | 60-65% | No |
| 6037183701 | 3922 | Los Angeles | 90042 | Los Angeles | -118.1878598 | 34.1093059 | 30.44 | 60.31 | 60-65% | No |
| 6065042622 | 4107 | Riverside | 92555 | Moreno Valley | -117.1876318 | 33.9260739 | 30.42 | 60.30 | 60-65% | No |
| 6095252608 | 3807 | Solano | 94533 | Fairfield | -122.0232104 | 38.2665083 | 30.41 | 60.29 | 60-65% | No |
| 6059076206 | 4517 | Orange | 92867 | Orange | -117.8401849 | 33.8056454 | 30.40 | 60.27 | 60-65% | No |
| 6037910501 | 5339 | Los Angeles | 93550 | Palmdale | -118.1125209 | 34.5802081 | 30.40 | 60.26 | 60-65% | No |
| 6001437400 | 3408 | Alameda | 94544 | Hayward | -122.0876478 | 37.6428275 | 30.40 | 60.25 | 60-65% | No |
| 6001407600 | 6027 | Alameda | 94601 | Oakland | -122.2031992 | 37.7775293 | 30.39 | 60.23 | 60-65% | No |
| 6037432101 | 4179 | Los Angeles | 91780 | Temple City | -118.0429074 | 34.0958571 | 30.38 | 60.22 | 60-65% | No |
| 6037271801 | 3635 | Los Angeles | 90034 | Los Angeles | -118.4182534 | 34.0167232 | 30.35 | 60.21 | 60-65% | No |
| 6071010803 | 3375 | San Bernardino | 92325 | Crestline | -117.2679825 | 34.2344383 | 30.35 | 60.20 | 60-65% | No |
| 6085503711 | 4763 | Santa Clara | 95116 | San Jose | -121.8444424 | 37.3498953 | 30.35 | 60.18 | 60-65% | No |
| 6037482701 | 4298 | Los Angeles | 91754 | Monterey Park | -118.1397485 | 34.037622 | 30.35 | 60.17 | 60-65% | No |
| 6111004506 | 7858 | Ventura | 93033 | Oxnard | -119.1821358 | 34.1511164 | 30.35 | 60.16 | 60-65% | No |
| 6111002200 | 6288 | Ventura | 93001 | Ventura | -119.2884377 | 34.2996321 | 30.34 | 60.15 | 60-65% | No |
| 6085500902 | 4523 | Santa Clara | 95112 | San Jose | -121.8796401 | 37.3330035 | 30.33 | 60.13 | 60-65% | No |
| 6065041809 | 5834 | Riverside | 92881 | Corona | -117.5449816 | 33.8557402 | 30.33 | 60.12 | 60-65% | No |
| 6037185204 | 2091 | Los Angeles | 90065 | Los Angeles | -118.22326 | 34.1029039 | 30.33 | 60.11 | 60-65% | No |
| 6037183702 | 2805 | Los Angeles | 90042 | Los Angeles | -118.1836835 | 34.1048444 | 30.33 | 60.10 | 60-65% | No |
| 6067007422 | 2692 | Sacramento | 95842 | Sacramento | -121.3409233 | 38.6917961 | 30.32 | 60.08 | 60-65% | No |
| 6071011205 | 1239 | San Bernardino | 92315 | Big Bear Lake | -116.9082131 | 34.2412057 | 30.32 | 60.07 | 60-65% | No |
| 6111004600 | 2126 | Ventura | 93042 | Point Mugu Nawc | -119.1160918 | 34.1061405 | 30.30 | 60.06 | 60-65% | No |
| 6037310202 | 4985 | Los Angeles | 91501 | Burbank | -118.2959084 | 34.1865849 | 30.30 | 60.05 | 60-65% | No |
| 6037900804 | 3489 | Los Angeles | 93534 | Lancaster | -118.1407 | 34.7127333 | 30.30 | 60.03 | 60-65% | No |
| 6073008511 | 2633 | San Diego | 92123 | San Diego | -117.1415783 | 32.8259958 | 30.30 | 60.02 | 60-65% | No |
| 6071007403 | 6947 | San Bernardino | 92404 | San Bernardino | -117.2350214 | 34.1467357 | 30.29 | 60.01 | 60-65% | No |
| 6037404302 | 2498 | Los Angeles | 91702 | Azusa | -117.903464 | 34.117896 | 30.29 | 59.99 | 55-60% | No |
| 6037273200 | 3711 | Los Angeles | 90291 | Venice | -118.4669749 | 33.9975862 | 30.28 | 59.98 | 55-60% | No |
| 6059076000 | 8371 | Orange | 92868 | Orange | -117.8679465 | 33.7812601 | 30.27 | 59.97 | 55-60% | No |
| 6001406400 | 2145 | Alameda | 94602 | Oakland | -122.2217201 | 37.796806 | 30.26 | 59.96 | 55-60% | No |
| 6111003300 | 8187 | Ventura | 93030 | Oxnard | -119.1858676 | 34.2135354 | 30.26 | 59.94 | 55-60% | No |
| 6085502102 | 7469 | Santa Clara | 95128 | San Jose | -121.92545 | 37.3102822 | 30.26 | 59.93 | 55-60% | No |
| 6037310602 | 2655 | Los Angeles | 91504 | Burbank | -118.3179763 | 34.1920712 | 30.25 | 59.92 | 55-60% | No |
| 6001435500 | 3725 | Alameda | 94541 | Hayward | -122.09333 | 37.6809369 | 30.23 | 59.91 | 55-60% | No |
| 6065042410 | 4882 | Riverside | 92557 | Moreno Valley | -117.2543975 | 33.9671778 | 30.22 | 59.89 | 55-60% | No |
| 6077005003 | 5417 | San Joaquin | 95366 | Ripon | -121.1158332 | 37.7850141 | 30.22 | 59.88 | 55-60% | No |
| 6107002002 | 4830 | Tulare | 93277 | Visalia | -119.3228298 | 36.3200435 | 30.22 | 59.87 | 55-60% | No |
| 6085501101 | 4074 | Santa Clara | 95112 | San Jose | -121.8919669 | 37.3480957 | 30.21 | 59.86 | 55-60% | No |
| 6037573403 | 3208 | Los Angeles | 90755 | Signal Hill | -118.1589588 | 33.7986075 | 30.21 | 59.84 | 55-60% | No |
| 6059088905 | 5282 | Orange | 92683 | Westminster | -117.9679766 | 33.7521177 | 30.20 | 59.83 | 55-60% | No |
| 6037408141 | 5450 | Los Angeles | 91744 | La Puente | -117.8924325 | 34.008773 | 30.18 | 59.82 | 55-60% | No |
| 6037217002 | 4977 | Los Angeles | 90035 | Los Angeles | -118.3804933 | 34.0495333 | 30.18 | 59.81 | 55-60% | No |
| 6037311700 | 6137 | Los Angeles | 91506 | Burbank | -118.3203385 | 34.1630509 | 30.16 | 59.79 | 55-60% | No |
| 6073012200 | 3326 | San Diego | 91950 | National City | -117.0738536 | 32.6639283 | 30.16 | 59.78 | 55-60% | No |
| 6037277100 | 3004 | Los Angeles | 90045 | Los Angeles | -118.3783824 | 33.9652241 | 30.16 | 59.77 | 55-60% | No |
| 6099000906 | 5810 | Stanislaus | 95355 | Modesto | -120.9324338 | 37.6596108 | 30.16 | 59.76 | 55-60% | No |
| 6073016302 | 5444 | San Diego | 92021 | El Cajon | -116.9433532 | 32.8039448 | 30.14 | 59.74 | 55-60% | No |
| 6037920017 | 4342 | Los Angeles | 91350 | Santa Clarita | -118.5288817 | 34.4426894 | 30.14 | 59.73 | 55-60% | No |
| 6037504002 | 5383 | Los Angeles | 90638 | La Mirada | -118.0239805 | 33.9092862 | 30.13 | 59.72 | 55-60% | No |
| 6059099249 | 4449 | Orange | 92704 | Santa Ana | -117.9165724 | 33.7429733 | 30.12 | 59.70 | 55-60% | No |
| 6037553400 | 3861 | Los Angeles | 90242 | Downey | -118.1471817 | 33.9082352 | 30.12 | 59.69 | 55-60% | No |
| 6037481605 | 3387 | Los Angeles | 91801 | Alhambra | -118.1255878 | 34.0719031 | 30.10 | 59.68 | 55-60% | No |
| 6007003400 | 2956 | Butte | 95948 | Gridley | -121.6578142 | 39.3453317 | 30.10 | 59.67 | 55-60% | No |
| 6001405402 | 3114 | Alameda | 94606 | Oakland | -122.2461006 | 37.7933319 | 30.09 | 59.65 | 55-60% | No |
| 6037482002 | 6947 | Los Angeles | 91754 | Monterey Park | -118.1482676 | 34.0488369 | 30.08 | 59.64 | 55-60% | No |
| 6059063702 | 5767 | Orange | 92627 | Costa Mesa | -117.9184807 | 33.6468911 | 30.08 | 59.63 | 55-60% | No |
| 6037481102 | 3624 | Los Angeles | 91776 | San Gabriel | -118.0944617 | 34.0998401 | 30.07 | 59.62 | 55-60% | No |
| 6037405500 | 6808 | Los Angeles | 91790 | West Covina | -117.9284554 | 34.0788823 | 30.07 | 59.60 | 55-60% | No |
| 6073018517 | 4127 | San Diego | 92056 | Oceanside | -117.3027415 | 33.1879915 | 30.07 | 59.59 | 55-60% | No |
| 6037269906 | 2878 | Los Angeles | 90034 | Los Angeles | -118.4031746 | 34.0249593 | 30.04 | 59.58 | 55-60% | No |
| 6111004717 | 4120 | Ventura | 93033 | Oxnard | -119.1486074 | 34.1719898 | 30.04 | 59.57 | 55-60% | No |
| 6013367100 | 5099 | Contra Costa | 94806 | San Pablo | -122.3305065 | 37.970609 | 30.04 | 59.55 | 55-60% | No |
| 6111005600 | 9976 | Ventura | 93012 | Camarillo | -119.0392215 | 34.1575595 | 30.03 | 59.54 | 55-60% | No |
| 6019004408 | 3517 | Fresno | 93711 | Fresno | -119.7952018 | 36.8626333 | 30.03 | 59.53 | 55-60% | No |
| 6037406500 | 6705 | Los Angeles | 91790 | West Covina | -117.9188723 | 34.0663578 | 30.03 | 59.52 | 55-60% | No |
| 6013301000 | 3659 | Contra Costa | 94561 | Oakley | -121.6299682 | 38.0381229 | 30.02 | 59.50 | 55-60% | No |
| 6085512508 | 7955 | Santa Clara | 95020 | Gilroy | -121.5788616 | 37.0047364 | 30.00 | 59.49 | 55-60% | No |
| 6037401500 | 5572 | Los Angeles | 91750 | La Verne | -117.7766343 | 34.097863 | 30.00 | 59.48 | 55-60% | No |
| 6001403400 | 4146 | Alameda | 94612 | Oakland | -122.2616693 | 37.8047578 | 29.99 | 59.47 | 55-60% | No |
| 6085508900 | 5273 | Santa Clara | 94085 | Sunnyvale | -122.0063825 | 37.3910523 | 29.99 | 59.45 | 55-60% | No |
| 6077005308 | 4189 | San Joaquin | 95376 | Tracy | -121.4440468 | 37.7436587 | 29.98 | 59.44 | 55-60% | No |
| 6001442500 | 7371 | Alameda | 94538 | Fremont | -121.9871471 | 37.537144 | 29.98 | 59.43 | 55-60% | No |
| 6013320004 | 6216 | Contra Costa | 94553 | Martinez | -122.0773567 | 38.0020819 | 29.96 | 59.41 | 55-60% | No |
| 6037503501 | 6481 | Los Angeles | 90604 | Whittier | -118.013351 | 33.9330431 | 29.96 | 59.40 | 55-60% | No |
| 6077003306 | 4229 | San Joaquin | 95207 | Stockton | -121.3066509 | 38.0148793 | 29.96 | 59.39 | 55-60% | No |
| 6065040616 | 7610 | Riverside | 92880 | Corona | -117.5776719 | 33.9422906 | 29.96 | 59.38 | 55-60% | No |
| 6059110604 | 8117 | Orange | 90621 | Buena Park | -117.9829914 | 33.8870126 | 29.96 | 59.36 | 55-60% | No |
| 6059088106 | 4638 | Orange | 92841 | Garden Grove | -117.991468 | 33.777455 | 29.95 | 59.35 | 55-60% | No |
| 6113011400 | 4193 | Yolo | 95698 | Zamora | -121.8369566 | 38.8196108 | 29.95 | 59.34 | 55-60% | No |
| 6067003800 | 5083 | Sacramento | 95822 | Sacramento | -121.4931707 | 38.5073142 | 29.95 | 59.33 | 55-60% | No |
| 6053001200 | 3178 | Monterey | 93901 | Salinas | -121.6493229 | 36.6646451 | 29.94 | 59.31 | 55-60% | No |
| 6001435700 | 4594 | Alameda | 94580 | San Lorenzo | -122.1160735 | 37.6786494 | 29.93 | 59.30 | 55-60% | No |
| 6065049800 | 3771 | Riverside | 92562 | Murrieta | -117.1978854 | 33.5462108 | 29.93 | 59.29 | 55-60% | No |
| 6037404504 | 5266 | Los Angeles | 91702 | Azusa | -117.9033404 | 34.1104925 | 29.93 | 59.28 | 55-60% | No |
| 6095251803 | 4988 | Solano | 94589 | Vallejo | -122.2652793 | 38.1358448 | 29.92 | 59.26 | 55-60% | No |
| 6085500300 | 3140 | Santa Clara | 95110 | San Jose | -121.9079708 | 37.3395861 | 29.92 | 59.25 | 55-60% | No |
| 6107002302 | 4570 | Tulare | 93274 | Tulare | -119.3219739 | 36.2189133 | 29.91 | 59.24 | 55-60% | No |
| 6037702802 | 2282 | Los Angeles | 90066 | Los Angeles | -118.4165623 | 34.0053553 | 29.90 | 59.23 | 55-60% | No |
| 6103000800 | 4112 | Tehama | 96035 | Gerber | -122.1795281 | 40.0733075 | 29.90 | 59.21 | 55-60% | No |
| 6037181000 | 6144 | Los Angeles | 90041 | Los Angeles | -118.2043862 | 34.1452669 | 29.90 | 59.20 | 55-60% | No |
| 6013365003 | 4924 | Contra Costa | 94806 | San Pablo | -122.3264034 | 37.9821375 | 29.90 | 59.19 | 55-60% | No |
| 6065042012 | 6242 | Riverside | 92508 | Riverside | -117.3205065 | 33.9108776 | 29.90 | 59.18 | 55-60% | No |
| 6029001802 | 5408 | Kern | 93309 | Bakersfield | -119.0674079 | 35.3637621 | 29.89 | 59.16 | 55-60% | No |
| 6019004506 | 3158 | Fresno | 93704 | Fresno | -119.8083939 | 36.815613 | 29.87 | 59.15 | 55-60% | No |
| 6037461901 | 5118 | Los Angeles | 91103 | Pasadena | -118.1488613 | 34.1544547 | 29.87 | 59.14 | 55-60% | No |
| 6013306003 | 4881 | Contra Costa | 94509 | Antioch | -121.7994409 | 38.0053331 | 29.86 | 59.12 | 55-60% | No |
| 6059011200 | 3916 | Orange | 92832 | Fullerton | -117.9360783 | 33.8732653 | 29.85 | 59.11 | 55-60% | No |
| 6037265510 | 4234 | Los Angeles | 90024 | Los Angeles | -118.4426278 | 34.0564831 | 29.85 | 59.10 | 55-60% | No |
| 6037106408 | 3463 | Los Angeles | 91342 | Sylmar | -118.4400777 | 34.3132613 | 29.85 | 59.09 | 55-60% | No |
| 6085503304 | 6916 | Santa Clara | 95121 | San Jose | -121.8211413 | 37.3126595 | 29.84 | 59.07 | 55-60% | No |
| 6037403323 | 5356 | Los Angeles | 91765 | Diamond Bar | -117.8237196 | 33.9980594 | 29.84 | 59.06 | 55-60% | No |
| 6029006403 | 5824 | Kern | 93241 | Lamont | -118.9232651 | 35.2596885 | 29.84 | 59.05 | 55-60% | No |
| 6053000600 | 7143 | Monterey | 93905 | Salinas | -121.6171939 | 36.6799302 | 29.83 | 59.04 | 55-60% | No |
| 6065049000 | 8249 | Riverside | 92555 | Moreno Valley | -117.1908956 | 33.8800511 | 29.79 | 59.02 | 55-60% | No |
| 6037293302 | 4720 | Los Angeles | 90710 | Harbor City | -118.3042086 | 33.8016119 | 29.77 | 59.01 | 55-60% | No |
| 6001433000 | 3832 | Alameda | 94578 | San Leandro | -122.1354706 | 37.7158642 | 29.76 | 59.00 | 55-60% | No |
| 6059086303 | 6212 | Orange | 92805 | Anaheim | -117.8911492 | 33.8123155 | 29.76 | 58.99 | 55-60% | No |
| 6037461000 | 6243 | Los Angeles | 91001 | Altadena | -118.1608413 | 34.1870169 | 29.75 | 58.97 | 55-60% | No |
| 6037106113 | 3493 | Los Angeles | 91342 | Sylmar | -118.4222365 | 34.3061792 | 29.72 | 58.96 | 55-60% | No |
| 6019007201 | 7671 | Fresno | 93631 | Kingsburg | -119.5391563 | 36.5460522 | 29.72 | 58.95 | 55-60% | No |
| 6107003601 | 7090 | Tulare | 93257 | Porterville | -119.0618557 | 36.0730814 | 29.72 | 58.94 | 55-60% | No |
| 6001435601 | 4902 | Alameda | 94541 | Hayward | -122.1022655 | 37.6746689 | 29.72 | 58.92 | 55-60% | No |
| 6037214902 | 2586 | Los Angeles | 90048 | Los Angeles | -118.3800927 | 34.0729596 | 29.71 | 58.91 | 55-60% | No |
| 6065043313 | 3504 | Riverside | 92544 | Hemet | -116.9506407 | 33.7338858 | 29.71 | 58.90 | 55-60% | No |
| 6037189202 | 2718 | Los Angeles | 90027 | Los Angeles | -118.2957566 | 34.1113224 | 29.71 | 58.89 | 55-60% | No |
| 6059076202 | 5812 | Orange | 92865 | Orange | -117.8387712 | 33.8397922 | 29.70 | 58.87 | 55-60% | No |
| 6059088401 | 5317 | Orange | 92840 | Garden Grove | -117.9281104 | 33.78879 | 29.69 | 58.86 | 55-60% | No |
| 6059021903 | 4034 | Orange | 92807 | Anaheim | -117.8078596 | 33.8523243 | 29.69 | 58.85 | 55-60% | No |
| 6037920337 | 7257 | Los Angeles | 91321 | Newhall | -118.5128742 | 34.3736616 | 29.69 | 58.83 | 55-60% | No |
| 6037212101 | 2507 | Los Angeles | 90020 | Los Angeles | -118.2941415 | 34.0635956 | 29.69 | 58.82 | 55-60% | No |
| 6073013307 | 3966 | San Diego | 91911 | Chula Vista | -117.0502967 | 32.5988025 | 29.69 | 58.81 | 55-60% | No |
| 6059087002 | 6922 | Orange | 92804 | Anaheim | -117.9717657 | 33.8249717 | 29.68 | 58.80 | 55-60% | No |
| 6065043316 | 3713 | Riverside | 92545 | Hemet | -116.9908966 | 33.716662 | 29.67 | 58.78 | 55-60% | No |
| 6037920029 | 3574 | Los Angeles | 91351 | Canyon Country | -118.4866076 | 34.4303386 | 29.67 | 58.77 | 55-60% | No |
| 6037109100 | 2492 | Los Angeles | 91345 | Mission Hills | -118.4631511 | 34.2771693 | 29.67 | 58.76 | 55-60% | No |
| 6037103300 | 3819 | Los Angeles | 91040 | Sunland | -118.3554781 | 34.2573787 | 29.67 | 58.75 | 55-60% | No |
| 6089012200 | 5379 | Shasta | 96022 | Cottonwood | -122.24336 | 40.4132639 | 29.66 | 58.73 | 55-60% | No |
| 6037134201 | 4270 | Los Angeles | 91304 | Canoga Park | -118.5912335 | 34.2139885 | 29.66 | 58.72 | 55-60% | No |
| 6083002101 | 3873 | Santa Barbara | 93454 | Santa Maria | -120.4266148 | 34.9494695 | 29.65 | 58.71 | 55-60% | No |
| 6059110402 | 5459 | Orange | 90620 | Buena Park | -117.9950644 | 33.8405494 | 29.65 | 58.70 | 55-60% | No |
| 6001444302 | 4354 | Alameda | 94560 | Newark | -122.0473856 | 37.5125267 | 29.64 | 58.68 | 55-60% | No |
| 6071008601 | 5618 | San Bernardino | 92374 | Redlands | -117.1317956 | 34.0605904 | 29.64 | 58.67 | 55-60% | No |
| 6085504418 | 4883 | Santa Clara | 95035 | Milpitas | -121.8805851 | 37.4320059 | 29.63 | 58.66 | 55-60% | No |
| 6115040600 | 6130 | Yuba | 95961 | Olivehurst | -121.5468773 | 39.0841363 | 29.63 | 58.65 | 55-60% | No |
| 6059042201 | 5639 | Orange | 92624 | Capistrano Beach | -117.6670752 | 33.4610098 | 29.63 | 58.63 | 55-60% | No |
| 6059075806 | 6121 | Orange | 92866 | Orange | -117.8376698 | 33.7805453 | 29.56 | 58.62 | 55-60% | No |
| 6037275302 | 4775 | Los Angeles | 90292 | Marina del Rey | -118.4336385 | 33.9838746 | 29.55 | 58.61 | 55-60% | No |
| 6109001200 | 3678 | Tuolumne | 95370 | Sonora | -120.3618958 | 38.0034086 | 29.55 | 58.60 | 55-60% | No |
| 6001422100 | 2685 | Alameda | 94710 | Berkeley | -122.2965391 | 37.8733005 | 29.54 | 58.58 | 55-60% | No |
| 6013329000 | 6309 | Contra Costa | 94520 | Concord | -122.0338936 | 37.9947441 | 29.52 | 58.57 | 55-60% | No |
| 6083002103 | 3930 | Santa Barbara | 93454 | Santa Maria | -120.4270588 | 34.9306689 | 29.51 | 58.56 | 55-60% | No |
| 6029000800 | 4925 | Kern | 93305 | Bakersfield | -118.9759749 | 35.4041078 | 29.50 | 58.54 | 55-60% | No |
| 6037186100 | 4715 | Los Angeles | 90065 | Los Angeles | -118.2299818 | 34.1284623 | 29.50 | 58.53 | 55-60% | No |
| 6001401100 | 4156 | Alameda | 94609 | Oakland | -122.2638645 | 37.8304835 | 29.50 | 58.52 | 55-60% | No |
| 6037211121 | 2351 | Los Angeles | 90004 | Los Angeles | -118.2854106 | 34.0730101 | 29.50 | 58.51 | 55-60% | No |
| 6099003606 | 10838 | Stanislaus | 95382 | Turlock | -120.8609918 | 37.5330658 | 29.49 | 58.49 | 55-60% | No |
| 6073010014 | 17679 | San Diego | 92154 | San Diego | -116.9784514 | 32.5754388 | 29.49 | 58.48 | 55-60% | No |
| 6037405701 | 3853 | Los Angeles | 91722 | Covina | -117.9211251 | 34.0937632 | 29.49 | 58.47 | 55-60% | No |
| 6067008913 | 4145 | Sacramento | 95670 | Rancho Cordova | -121.304405 | 38.6070496 | 29.48 | 58.46 | 55-60% | No |
| 6037900705 | 4285 | Los Angeles | 93534 | Lancaster | -118.155171 | 34.6584238 | 29.48 | 58.44 | 55-60% | No |
| 6095253300 | 2743 | Solano | 95620 | Dixon | -121.7998024 | 38.4198882 | 29.45 | 58.43 | 55-60% | No |
| 6111001206 | 941 | Ventura | 93001 | Ventura | -119.371944 | 34.3439029 | 29.45 | 58.42 | 55-60% | No |
| 6071007105 | 2715 | San Bernardino | 92324 | Colton | -117.2863081 | 34.0292865 | 29.45 | 58.41 | 55-60% | No |
| 6037216402 | 2615 | Los Angeles | 90035 | Los Angeles | -118.3804364 | 34.0611535 | 29.45 | 58.39 | 55-60% | No |
| 6067008905 | 4451 | Sacramento | 95670 | Rancho Cordova | -121.2967505 | 38.5983186 | 29.43 | 58.38 | 55-60% | No |
| 6037920336 | 7027 | Los Angeles | 91321 | Newhall | -118.5358844 | 34.3855971 | 29.40 | 58.37 | 55-60% | No |
| 6037109400 | 3720 | Los Angeles | 91345 | Mission Hills | -118.4556969 | 34.2687178 | 29.38 | 58.36 | 55-60% | No |
| 6101050102 | 4559 | Sutter | 95991 | Yuba City | -121.6245696 | 39.1465851 | 29.36 | 58.34 | 55-60% | No |
| 6037212501 | 2165 | Los Angeles | 90005 | Los Angeles | -118.3053637 | 34.05607 | 29.36 | 58.33 | 55-60% | No |
| 6065043703 | 2585 | Riverside | 92544 | Hemet | -116.9005782 | 33.7539539 | 29.36 | 58.32 | 55-60% | No |
| 6059011300 | 4379 | Orange | 92832 | Fullerton | -117.9257735 | 33.875505 | 29.35 | 58.30 | 55-60% | No |
| 6067008909 | 2358 | Sacramento | 95670 | Rancho Cordova | -121.3258865 | 38.5849031 | 29.35 | 58.29 | 55-60% | No |
| 6001436602 | 4571 | Alameda | 94544 | Hayward | -122.0851818 | 37.65183 | 29.34 | 58.28 | 55-60% | No |
| 6067009105 | 2709 | Sacramento | 95826 | Sacramento | -121.371319 | 38.5619376 | 29.34 | 58.27 | 55-60% | No |
| 6059099227 | 5922 | Orange | 92708 | Fountain Valley | -117.9248182 | 33.7239938 | 29.33 | 58.25 | 55-60% | No |

| | | | | | | | | | | | |
|---|---|---|---|---|---|---|---|---|---|---|---|
| 6027000800 | 3378 | Inyo | 92328 | Death Valley | -117.1185271 | 36.2036638 | 29.31 | 58.24 | 55-60% | No | 0.055 |
| 6037115103 | 2776 | Los Angeles | 91330 | Northridge | -118.5274632 | 34.2438266 | 29.30 | 58.23 | 55-60% | No | 0.060 |
| 6073005900 | 2821 | San Diego | 92101 | San Diego | -117.1642671 | 32.7293426 | 29.29 | 58.22 | 55-60% | No | 0.038 |
| 6069000802 | 2534 | San Benito | 95043 | Paicines | -121.000818 | 36.5803313 | 29.28 | 58.20 | 55-60% | No | 0.048 |
| 6001410300 | 3536 | Alameda | 94603 | Oakland | -122.1661407 | 37.7466798 | 29.28 | 58.19 | 55-60% | No | 0.030 |
| 6067008703 | 4912 | Sacramento | 95670 | Rancho Cordova | -121.2329326 | 38.6248503 | 29.28 | 58.18 | 55-60% | No | 0.053 |
| 6037480802 | 3279 | Los Angeles | 91803 | Alhambra | -118.1526495 | 34.0820627 | 29.28 | 58.17 | 55-60% | No | 0.050 |
| 6031000702 | 4382 | Kings | 93230 | Hanford | -119.6219711 | 36.3489843 | 29.27 | 58.15 | 55-60% | No | 0.062 |
| 6037462302 | 2972 | Los Angeles | 91106 | Pasadena | -118.1268012 | 34.1490435 | 29.27 | 58.14 | 55-60% | No | 0.053 |
| 6037503201 | 3912 | Los Angeles | 90604 | Whittier | -118.0266537 | 33.9324918 | 29.27 | 58.13 | 55-60% | No | 0.046 |
| 6037900703 | 4375 | Los Angeles | 93534 | Lancaster | -118.1567565 | 34.6820995 | 29.24 | 58.12 | 55-60% | No | 0.062 |
| 6071011300 | 1408 | San Bernardino | 92314 | Big Bear City | -116.9502352 | 34.3019952 | 29.24 | 58.10 | 55-60% | No | 0.068 |
| 6081600600 | 5352 | San Mateo | 94014 | Daly City | -122.4665822 | 37.6975415 | 29.23 | 58.09 | 55-60% | No | 0.030 |
| 6037550400 | 1534 | Los Angeles | 90241 | Downey | -118.0976911 | 33.9365565 | 29.22 | 58.08 | 55-60% | No | 0.046 |
| 6067004201 | 5290 | Sacramento | 95822 | Sacramento | -121.4990252 | 38.4887495 | 29.22 | 58.07 | 55-60% | No | 0.048 |
| 6073009201 | 5014 | San Diego | 92123 | San Diego | -117.146338 | 32.8015387 | 29.21 | 58.05 | 55-60% | No | 0.042 |
| 6037102105 | 1731 | Los Angeles | 91505 | Burbank | -118.3492638 | 34.2098714 | 29.20 | 58.04 | 55-60% | No | 0.055 |
| 6067009010 | 4866 | Sacramento | 95670 | Rancho Cordova | -121.2806531 | 38.5901142 | 29.20 | 58.03 | 55-60% | No | 0.051 |
| 6059086405 | 6578 | Orange | 92805 | Anaheim | -117.8971362 | 33.8434369 | 29.19 | 58.01 | 55-60% | No | 0.046 |
| 6059001401 | 5013 | Orange | 90631 | La Habra | -117.9410438 | 33.9419968 | 29.18 | 58.00 | 55-60% | No | 0.046 |
| 6037139402 | 2851 | Los Angeles | 91356 | Tarzana | -118.5517782 | 34.1677649 | 29.17 | 57.99 | 55-60% | No | 0.057 |
| 6073003111 | 6183 | San Diego | 92114 | San Diego | -117.0807478 | 32.7050468 | 29.13 | 57.98 | 55-60% | No | 0.040 |
| 6037117101 | 4796 | Los Angeles | 91343 | North Hills | -118.4621302 | 34.2391374 | 29.12 | 57.96 | 55-60% | No | 0.057 |
| 6095252702 | 6808 | Solano | 94585 | Suisun City | -121.9839893 | 38.1435924 | 29.12 | 57.95 | 55-60% | No | 0.038 |
| 6073006100 | 2237 | San Diego | 92103 | San Diego | -117.1737119 | 32.7364189 | 29.10 | 57.94 | 55-60% | No | 0.040 |
| 6081600800 | 6768 | San Mateo | 94015 | Daly City | -122.4802873 | 37.7001002 | 29.09 | 57.93 | 55-60% | No | 0.030 |
| 6095252501 | 2670 | Solano | 94533 | Fairfield | -122.0412776 | 38.2547036 | 29.09 | 57.91 | 55-60% | No | 0.040 |
| 6037404100 | 6445 | Los Angeles | 91702 | Azusa | -117.8946926 | 34.1142596 | 29.08 | 57.90 | 55-60% | No | 0.055 |
| 6037543601 | 3910 | Los Angeles | 90745 | Carson | -118.2814216 | 33.8216423 | 29.08 | 57.89 | 55-60% | No | 0.042 |
| 6077005001 | 5569 | San Joaquin | 95366 | Ripon | -121.123891 | 37.7341456 | 29.07 | 57.88 | 55-60% | No | 0.053 |
| 6075025800 | 1960 | San Francisco | 94134 | San Francisco | -122.4020019 | 37.7216202 | 29.06 | 57.86 | 55-60% | No | 0.030 |
| 6111002800 | 6270 | Ventura | 93001 | Ventura | -119.2460082 | 34.2507528 | 29.02 | 57.85 | 55-60% | No | 0.044 |
| 6101050403 | 3585 | Sutter | 95991 | Yuba City | -121.6016745 | 39.0927643 | 29.02 | 57.84 | 55-60% | No | 0.048 |
| 6037124500 | 2779 | Los Angeles | 91401 | Van Nuys | -118.4267703 | 34.1722741 | 29.02 | 57.83 | 55-60% | No | 0.053 |
| 6085512017 | 7804 | Santa Clara | 95111 | San Jose | -121.8167937 | 37.2730779 | 29.01 | 57.81 | 55-60% | No | 0.038 |
| 6113010800 | 3881 | Yolo | 95776 | Woodland | -121.7607119 | 38.6846131 | 29.00 | 57.80 | 55-60% | No | 0.046 |
| 6029006004 | 1601 | Kern | 93518 | Caliente | -118.3406115 | 35.2513177 | 28.99 | 57.79 | 55-60% | No | 0.065 |
| 6065042408 | 3152 | Riverside | 92557 | Moreno Valley | -117.2309756 | 33.9542796 | 28.98 | 57.78 | 55-60% | No | 0.065 |
| 6065941500 | 4291 | Riverside | 92583 | San Jacinto | -116.880664 | 33.7741421 | 28.98 | 57.76 | 55-60% | No | 0.065 |
| 6085503337 | 3772 | Santa Clara | 95121 | San Jose | -121.8099466 | 37.3010538 | 28.98 | 57.75 | 55-60% | No | 0.038 |
| 6037554406 | 4875 | Los Angeles | 90706 | Bellflower | -118.1125129 | 33.8726125 | 28.97 | 57.74 | 55-60% | No | 0.044 |
| 6067007423 | 5313 | Sacramento | 95842 | Sacramento | -121.362801 | 38.6718268 | 28.96 | 57.72 | 55-60% | No | 0.051 |
| 6025011201 | 6043 | Imperial | 92243 | El Centro | -115.5677778 | 32.8129785 | 28.96 | 57.71 | 55-60% | No | 0.055 |
| 6037269903 | 3650 | Los Angeles | 90034 | Los Angeles | -118.4064763 | 34.0209031 | 28.93 | 57.70 | 55-60% | No | 0.046 |
| 6005000304 | 3946 | Amador | 95640 | Ione | -120.9220547 | 38.2814338 | 28.93 | 57.69 | 55-60% | No | 0.053 |
| 6071000103 | 4740 | San Bernardino | 91709 | Chino Hills | -117.7524244 | 34.0155703 | 28.93 | 57.67 | 55-60% | No | 0.057 |
| 6071008901 | 2174 | San Bernardino | 93555 | Ridgecrest | -117.3023776 | 35.5376297 | 28.93 | 57.66 | 55-60% | No | 0.057 |
| 6073020214 | 5143 | San Diego | 92025 | Escondido | -117.0844242 | 33.1270112 | 28.93 | 57.65 | 55-60% | No | 0.048 |
| 6059011101 | 4140 | Orange | 92833 | Fullerton | -117.9459428 | 33.8604798 | 28.93 | 57.64 | 55-60% | No | 0.046 |
| 6065041702 | 4572 | Riverside | 92882 | Corona | -117.576529 | 33.8674156 | 28.93 | 57.62 | 55-60% | No | 0.060 |
| 6037189905 | 2304 | Los Angeles | 90046 | Los Angeles | -118.3515882 | 34.100603 | 28.91 | 57.61 | 55-60% | No | 0.050 |
| 6037101210 | 5990 | Los Angeles | 91042 | Tujunga | -118.2907309 | 34.2529724 | 28.88 | 57.60 | 55-60% | No | 0.053 |
| 6111000304 | 4777 | Ventura | 93015 | Fillmore | -118.9627618 | 34.411561 | 28.88 | 57.59 | 55-60% | No | 0.051 |
| 6037124400 | 4192 | Los Angeles | 91607 | Valley Village | -118.4114177 | 34.1739658 | 28.88 | 57.57 | 55-60% | No | 0.053 |
| 6037403317 | 4721 | Los Angeles | 91766 | Pomona | -117.7839389 | 34.0389204 | 28.87 | 57.56 | 55-60% | No | 0.057 |
| 6067009503 | 3067 | Sacramento | 95632 | Galt | -121.3082738 | 38.2719695 | 28.86 | 57.55 | 55-60% | No | 0.046 |
| 6073006500 | 2569 | San Diego | 92110 | San Diego | -117.2008368 | 32.7521188 | 28.85 | 57.54 | 55-60% | No | 0.040 |
| 6037480804 | 4998 | Los Angeles | 91801 | Alhambra | -118.1472414 | 34.0957202 | 28.84 | 57.52 | 55-60% | No | 0.050 |
| 6037301203 | 4368 | Los Angeles | 91202 | Glendale | -118.2609478 | 34.1662572 | 28.84 | 57.51 | 55-60% | No | 0.053 |
| 6037267600 | 2549 | Los Angeles | 90025 | Los Angeles | -118.4524492 | 34.0340912 | 28.82 | 57.50 | 55-60% | No | 0.046 |
| 6099000911 | 4815 | Stanislaus | 95355 | Modesto | -120.9505449 | 37.6718475 | 28.82 | 57.49 | 55-60% | No | 0.053 |
| 6085503111 | 5101 | Santa Clara | 95122 | San Jose | -121.8397083 | 37.3225762 | 28.82 | 57.47 | 55-60% | No | 0.038 |
| 6029005203 | 4679 | Kern | 93283 | Weldon | -118.2658355 | 35.5169895 | 28.82 | 57.46 | 55-60% | No | 0.062 |
| 6075012402 | 3974 | San Francisco | 94102 | San Francisco | -122.4177669 | 37.780125 | 28.81 | 57.45 | 55-60% | No | 0.030 |
| 6065040813 | 6080 | Riverside | 92860 | Norco | -117.5321545 | 33.9155438 | 28.81 | 57.43 | 55-60% | No | 0.062 |
| 6037123601 | 4995 | Los Angeles | 91401 | Van Nuys | -118.4162038 | 34.1774941 | 28.81 | 57.42 | 55-60% | No | 0.055 |
| 6095252102 | 3874 | Solano | 94510 | Benicia | -122.1071716 | 38.0870969 | 28.78 | 57.41 | 55-60% | No | 0.035 |
| 6071002307 | 5085 | San Bernardino | 92336 | Fontana | -117.4162682 | 34.1176605 | 28.78 | 57.40 | 55-60% | No | 0.065 |
| 6037403902 | 4806 | Los Angeles | 91740 | Glendora | -117.8724805 | 34.1120835 | 28.78 | 57.38 | 55-60% | No | 0.057 |
| 6037400603 | 5249 | Los Angeles | 91010 | Duarte | -117.9217301 | 34.1546148 | 28.77 | 57.37 | 55-60% | No | 0.055 |
| 6037276100 | 5592 | Los Angeles | 90045 | Los Angeles | -118.3730208 | 33.9759315 | 28.77 | 57.36 | 55-60% | No | 0.046 |
| 6059088702 | 6107 | Orange | 92844 | Garden Grove | -117.9579741 | 33.7703805 | 28.75 | 57.35 | 55-60% | No | 0.046 |
| 6037480302 | 4255 | Los Angeles | 91801 | Alhambra | -118.1218022 | 34.1012449 | 28.75 | 57.33 | 55-60% | No | 0.051 |
| 6107001005 | 2733 | Tulare | 93291 | Visalia | -119.3587347 | 36.3345065 | 28.75 | 57.32 | 55-60% | No | 0.060 |
| 6037481711 | 4530 | Los Angeles | 91755 | Monterey Park | -118.1198426 | 34.0661708 | 28.74 | 57.31 | 55-60% | No | 0.048 |
| 6037406412 | 2482 | Los Angeles | 91791 | West Covina | -117.8984872 | 34.0628294 | 28.73 | 57.30 | 55-60% | No | 0.055 |
| 6067007601 | 6416 | Sacramento | 95608 | Carmichael | -121.3352428 | 38.648392 | 28.73 | 57.28 | 55-60% | No | 0.051 |
| 6111004304 | 6760 | Ventura | 93041 | Port Hueneme | -119.2083822 | 34.1784074 | 28.72 | 57.27 | 55-60% | No | 0.044 |
| 6077003214 | 3054 | San Joaquin | 95209 | Stockton | -121.3565447 | 38.0403551 | 28.71 | 57.26 | 55-60% | No | 0.046 |
| 6077004600 | 5892 | San Joaquin | 95220 | Acampo | -121.2708622 | 38.1980539 | 28.71 | 57.25 | 55-60% | No | 0.048 |
| 6037310900 | 6870 | Los Angeles | 91506 | Burbank | -118.3309896 | 34.1813842 | 28.70 | 57.23 | 55-60% | No | 0.055 |
| 6095252317 | 6823 | Solano | 94533 | Fairfield | -121.9719091 | 38.290379 | 28.68 | 57.22 | 55-60% | No | 0.040 |
| 6037106403 | 3825 | Los Angeles | 91342 | Sylmar | -118.4412741 | 34.3060186 | 28.68 | 57.21 | 55-60% | No | 0.060 |
| 6037131900 | 4210 | Los Angeles | 91406 | Van Nuys | -118.5098593 | 34.2047193 | 28.68 | 57.20 | 55-60% | No | 0.060 |
| 6037401311 | 6521 | Los Angeles | 91773 | San Dimas | -117.8144748 | 34.1111836 | 28.66 | 57.18 | 55-60% | No | 0.060 |
| 6047001101 | 5880 | Merced | 95340 | Merced | -120.4601195 | 37.3252966 | 28.65 | 57.17 | 55-60% | No | 0.057 |
| 6077003108 | 4450 | San Joaquin | 95219 | Stockton | -121.3621535 | 38.0093048 | 28.65 | 57.16 | 55-60% | No | 0.046 |
| 6037463102 | 3779 | Los Angeles | 91107 | Pasadena | -118.0800613 | 34.1368435 | 28.64 | 57.14 | 55-60% | No | 0.051 |
| 6037900507 | 7669 | Los Angeles | 93535 | Lancaster | -118.0902169 | 34.678706 | 28.64 | 57.13 | 55-60% | No | 0.062 |
| 6067001700 | 4794 | Sacramento | 95817 | Sacramento | -121.4417291 | 38.5519098 | 28.62 | 57.12 | 55-60% | No | 0.048 |
| 6037311000 | 3755 | Los Angeles | 91505 | Burbank | -118.344165 | 34.184898 | 28.62 | 57.11 | 55-60% | No | 0.055 |
| 6065043702 | 4235 | Riverside | 92544 | Hemet | -116.9112184 | 33.7510081 | 28.61 | 57.09 | 55-60% | No | 0.065 |
| 6037197410 | 3704 | Los Angeles | 90026 | Los Angeles | -118.2504362 | 34.0929176 | 28.61 | 57.08 | 55-60% | No | 0.046 |
| 6071010015 | 5434 | San Bernardino | 92345 | Hesperia | -117.3254425 | 34.4374608 | 28.59 | 57.07 | 55-60% | No | 0.065 |
| 6037408005 | 5088 | Los Angeles | 91791 | West Covina | -117.8958117 | 34.0490207 | 28.59 | 57.06 | 55-60% | No | 0.053 |
| 6037651001 | 5522 | Los Angeles | 90501 | Torrance | -118.3130811 | 33.8123572 | 28.59 | 57.04 | 55-60% | No | 0.042 |
| 6073011902 | 5246 | San Diego | 91950 | National City | -117.0816035 | 32.6883686 | 28.57 | 57.03 | 55-60% | No | 0.040 |
| 6037555104 | 4239 | Los Angeles | 90715 | Lakewood | -118.0653314 | 33.8357784 | 28.55 | 57.02 | 55-60% | No | 0.044 |
| 6065043509 | 5117 | Riverside | 92583 | San Jacinto | -116.9556879 | 33.7970346 | 28.54 | 57.01 | 55-60% | No | 0.065 |
| 6067008129 | 3358 | Sacramento | 95621 | Citrus Heights | -121.3205143 | 38.7026136 | 28.52 | 56.99 | 55-60% | No | 0.051 |
| 6075980501 | 797 | San Francisco | 94134 | San Francisco | -122.4191554 | 37.7162957 | 28.51 | 56.98 | 55-60% | No | 0.030 |
| 6073002202 | 4859 | San Diego | 92105 | San Diego | -117.1051018 | 32.7523973 | 28.51 | 56.97 | 55-60% | No | 0.040 |
| 6065051300 | 8371 | Riverside | 92583 | San Jacinto | -116.9542225 | 33.8238592 | 28.50 | 56.96 | 55-60% | No | 0.065 |
| 6073013312 | 2853 | San Diego | 91911 | Chula Vista | -117.0326038 | 32.6009941 | 28.50 | 56.94 | 55-60% | No | 0.038 |
| 6001440333 | 2839 | Alameda | 94587 | Union City | -122.0738117 | 37.6053389 | 28.50 | 56.93 | 55-60% | No | 0.035 |
| 6059099410 | 4101 | Orange | 92647 | Huntington Beach | -117.9979307 | 33.7265017 | 28.49 | 56.92 | 55-60% | No | 0.044 |
| 6077005004 | 5702 | San Joaquin | 95366 | Ripon | -121.1609082 | 37.728534 | 28.48 | 56.91 | 55-60% | No | 0.053 |
| 6071010804 | 2947 | San Bernardino | 92407 | San Bernardino | -117.279282 | 34.2536638 | 28.48 | 56.89 | 55-60% | No | 0.068 |
| 6037117102 | 2631 | Los Angeles | 91343 | North Hills | -118.4598237 | 34.2481946 | 28.47 | 56.88 | 55-60% | No | 0.057 |
| 6067009618 | 4642 | Sacramento | 95758 | Elk Grove | -121.466027 | 38.4423863 | 28.47 | 56.87 | 55-60% | No | 0.048 |
| 6013336101 | 4802 | Contra Costa | 94520 | Concord | -122.034523 | 37.9667876 | 28.46 | 56.85 | 55-60% | No | 0.038 |
| 6059088701 | 6067 | Orange | 92841 | Garden Grove | -117.9584718 | 33.7776732 | 28.46 | 56.84 | 55-60% | No | 0.046 |
| 6059075805 | 4213 | Orange | 92866 | Orange | -117.8365359 | 33.7932453 | 28.46 | 56.83 | 55-60% | No | 0.048 |
| 6037553300 | 3390 | Los Angeles | 90706 | Bellflower | -118.1392813 | 33.9043767 | 28.45 | 56.82 | 55-60% | No | 0.044 |
| 6085504410 | 4431 | Santa Clara | 95132 | San Jose | -121.8789262 | 37.4093875 | 28.43 | 56.80 | 55-60% | No | 0.035 |
| 6083002404 | 7800 | Santa Barbara | 93458 | Santa Maria | -120.4448288 | 34.9423293 | 28.40 | 56.79 | 55-60% | No | 0.035 |
| 6001437600 | 3217 | Alameda | 94544 | Hayward | -122.0804835 | 37.6353608 | 28.39 | 56.78 | 55-60% | No | 0.035 |
| 6037405400 | 4795 | Los Angeles | 91722 | Covina | -117.9315739 | 34.0915037 | 28.38 | 56.77 | 55-60% | No | 0.053 |
| 6037650605 | 2763 | Los Angeles | 90503 | Torrance | -118.3504673 | 33.8453408 | 28.37 | 56.75 | 55-60% | No | 0.044 |
| 6085504001 | 6017 | Santa Clara | 95127 | San Jose | -121.8272278 | 37.3586509 | 28.36 | 56.74 | 55-60% | No | 0.038 |
| 6103001000 | 7175 | Tehama | 96021 | Corning | -122.1205504 | 39.8864854 | 28.34 | 56.73 | 55-60% | No | 0.050 |
| 6001438300 | 3731 | Alameda | 94545 | Hayward | -122.088523 | 37.6282241 | 28.34 | 56.72 | 55-60% | No | 0.033 |
| 6037111400 | 7560 | Los Angeles | 91344 | Granada Hills | -118.496182 | 34.2578116 | 28.33 | 56.70 | 55-60% | No | 0.057 |
| 6107001502 | 5918 | Tulare | 93221 | Exeter | -119.1467114 | 36.285001 | 28.33 | 56.69 | 55-60% | No | 0.062 |
| 6029003303 | 1471 | Kern | 93252 | Maricopa | -119.451887 | 35.0702231 | 28.32 | 56.68 | 55-60% | No | 0.060 |
| 6067008911 | 2295 | Sacramento | 95670 | Rancho Cordova | -121.3171784 | 38.5877273 | 28.32 | 56.67 | 55-60% | No | 0.051 |
| 6037135102 | 3513 | Los Angeles | 91307 | West Hills | -118.6174552 | 34.1886366 | 28.31 | 56.65 | 55-60% | No | 0.057 |
| 6107002007 | 8185 | Tulare | 93277 | Visalia | -119.3248599 | 36.2802907 | 28.30 | 56.64 | 55-60% | No | 0.060 |
| 6065046404 | 5590 | Riverside | 92595 | Wildomar | -117.2771726 | 33.6510929 | 28.29 | 56.63 | 55-60% | No | 0.057 |
| 6071009906 | 4941 | San Bernardino | 92392 | Victorville | -117.3728997 | 34.4768743 | 28.29 | 56.61 | 55-60% | No | 0.065 |
| 6099000907 | 3200 | Stanislaus | 95350 | Modesto | -120.9850908 | 37.6835377 | 28.28 | 56.60 | 55-60% | No | 0.053 |
| 6029005506 | 5998 | Kern | 93560 | Rosamond | -118.3200023 | 34.885114 | 28.26 | 56.59 | 55-60% | No | 0.065 |
| 6037403801 | 6212 | Los Angeles | 91724 | Covina | -117.8678976 | 34.1029152 | 28.26 | 56.58 | 55-60% | No | 0.057 |
| 6059099242 | 3584 | Orange | 92647 | Huntington Beach | -117.9808564 | 33.7191973 | 28.26 | 56.56 | 55-60% | No | 0.044 |
| 6111000600 | 6141 | Ventura | 93060 | Santa Paula | -119.0606093 | 34.3535231 | 28.25 | 56.55 | 55-60% | No | 0.048 |
| 6037106603 | 2979 | Los Angeles | 91344 | Granada Hills | -118.5244831 | 34.3123662 | 28.24 | 56.54 | 55-60% | No | 0.062 |
| 6081601601 | 2893 | San Mateo | 94014 | Daly City | -122.4496579 | 37.6781941 | 28.24 | 56.53 | 55-60% | No | 0.030 |
| 6085512401 | 4782 | Santa Clara | 95046 | San Martin | -121.6054408 | 37.059904 | 28.24 | 56.51 | 55-60% | No | 0.040 |
| 6059087105 | 4635 | Orange | 92802 | Anaheim | -117.9346612 | 33.8274824 | 28.23 | 56.50 | 55-60% | No | 0.046 |
| 6071010017 | 14798 | San Bernardino | 92344 | Hesperia | -117.3996436 | 34.3808892 | 28.22 | 56.49 | 55-60% | No | 0.065 |
| 6073002710 | 4228 | San Diego | 92105 | San Diego | -117.0844892 | 32.7439483 | 28.21 | 56.48 | 55-60% | No | 0.040 |
| 6001433102 | 3989 | Alameda | 94578 | San Leandro | -122.1335017 | 37.7021541 | 28.21 | 56.46 | 55-60% | No | 0.030 |
| 6023010901 | 4533 | Humboldt | 95540 | Fortuna | -124.1377835 | 40.5984451 | 28.20 | 56.45 | 55-60% | No | 0.026 |
| 6073010015 | 2803 | San Diego | 92154 | San Diego | -116.9530603 | 32.560142 | 28.20 | 56.44 | 55-60% | No | 0.035 |
| 6001433600 | 5978 | Alameda | 94579 | San Leandro | -122.1437942 | 37.6860081 | 28.20 | 56.43 | 55-60% | No | 0.033 |
| 6037206020 | 7883 | Los Angeles | 90012 | Los Angeles | -118.2311153 | 34.0571168 | 28.18 | 56.41 | 55-60% | No | 0.046 |
| 6037403600 | 6672 | Los Angeles | 91724 | Covina | -117.8613457 | 34.0753742 | 28.18 | 56.40 | 55-60% | No | 0.057 |
| 6075011700 | 1783 | San Francisco | 94108 | San Francisco | -122.4034859 | 37.7904674 | 28.18 | 56.39 | 55-60% | No | 0.030 |
| 6085503703 | 4271 | Santa Clara | 95116 | San Jose | -121.8394637 | 37.3456739 | 28.18 | 56.38 | 55-60% | No | 0.038 |
| 6037920030 | 5818 | Los Angeles | 91351 | Canyon Country | -118.4898281 | 34.4151371 | 28.17 | 56.36 | 55-60% | No | 0.065 |
| 6115040700 | 10879 | Yuba | 95961 | Olivehurst | -121.5531096 | 39.017754 | 28.17 | 56.35 | 55-60% | No | 0.050 |
| 6085504802 | 5242 | Santa Clara | 94089 | Sunnyvale | -121.9911728 | 37.4003921 | 28.16 | 56.34 | 55-60% | No | 0.035 |
| 6077005403 | 5875 | San Joaquin | 95376 | Tracy | -121.4450292 | 37.7328505 | 28.16 | 56.32 | 55-60% | No | 0.053 |
| 6065045704 | 2804 | Riverside | 92236 | Coachella | -116.1823835 | 33.6712436 | 28.16 | 56.31 | 55-60% | No | 0.062 |
| 6001437500 | 4528 | Alameda | 94544 | Hayward | -122.0793899 | 37.644034 | 28.15 | 56.30 | 55-60% | No | 0.033 |
| 6071002034 | 13758 | San Bernardino | 91739 | Rancho Cucamonga | -117.5244995 | 34.1192063 | 28.15 | 56.29 | 55-60% | No | 0.065 |
| 6073015301 | 3179 | San Diego | 92020 | El Cajon | -116.9579853 | 32.7840225 | 28.14 | 56.27 | 55-60% | No | 0.046 |
| 6077005208 | 5784 | San Joaquin | 95376 | Tracy | -121.4337996 | 37.7200089 | 28.14 | 56.26 | 55-60% | No | 0.053 |
| 6037271901 | 3087 | Los Angeles | 90066 | Los Angeles | -118.4246723 | 34.0128357 | 28.14 | 56.25 | 55-60% | No | 0.046 |
| 6059076205 | 6847 | Orange | 92867 | Orange | -117.8488281 | 33.8051326 | 28.13 | 56.24 | 55-60% | No | 0.048 |
| 6037111201 | 3410 | Los Angeles | 91344 | Granada Hills | -118.5101489 | 34.2748338 | 28.13 | 56.22 | 55-60% | No | 0.060 |
| 6037400304 | 6714 | Los Angeles | 91773 | San Dimas | -117.7979719 | 34.1049693 | 28.12 | 56.21 | 55-60% | No | 0.060 |
| 6083002403 | 6811 | Santa Barbara | 93458 | Santa Maria | -120.4447531 | 34.9496291 | 28.12 | 56.20 | 55-60% | No | 0.035 |
| 6065040611 | 7640 | Riverside | 92880 | Corona | -117.5886851 | 33.9608636 | 28.12 | 56.19 | 55-60% | No | 0.062 |
| 6067002900 | 4499 | Sacramento | 95820 | Sacramento | -121.4347594 | 38.5428857 | 28.11 | 56.17 | 55-60% | No | 0.048 |
| 6067009320 | 4336 | Sacramento | 95828 | Sacramento | -121.40334 | 38.4604865 | 28.11 | 56.16 | 55-60% | No | 0.048 |
| 6029000903 | 3653 | Kern | 93306 | Bakersfield | -118.9550626 | 35.4034052 | 28.11 | 56.15 | 55-60% | No | 0.062 |
| 6037900606 | 3721 | Los Angeles | 93535 | Lancaster | -118.1244376 | 34.7004762 | 28.11 | 56.14 | 55-60% | No | 0.062 |
| 6029000904 | 4008 | Kern | 93306 | Bakersfield | -118.9584296 | 35.3894623 | 28.11 | 56.12 | 55-60% | No | 0.062 |
| 6037141303 | 3089 | Los Angeles | 91403 | Sherman Oaks | -118.4552476 | 34.1549353 | 28.10 | 56.11 | 55-60% | No | 0.053 |
| 6065040604 | 5541 | Riverside | 91752 | Mira Loma | -117.531606 | 33.9861154 | 28.10 | 56.10 | 55-60% | No | 0.062 |
| 6037195902 | 1905 | Los Angeles | 90026 | Los Angeles | -118.2791664 | 34.0871531 | 28.10 | 56.09 | 55-60% | No | 0.048 |
| 6037109700 | 4493 | Los Angeles | 91344 | Granada Hills | -118.4808881 | 34.2619343 | 28.10 | 56.07 | 55-60% | No | 0.057 |
| 6065040302 | 7308 | Riverside | 92509 | Riverside | -117.4427988 | 33.9933691 | 28.09 | 56.06 | 55-60% | No | 0.062 |
| 6059074006 | 5555 | Orange | 92707 | Santa Ana | -117.8817476 | 33.6980366 | 28.08 | 56.05 | 55-60% | No | 0.046 |
| 6059075003 | 7408 | Orange | 92706 | Santa Ana | -117.8707228 | 33.7572599 | 28.08 | 56.03 | 55-60% | No | 0.046 |
| 6097151402 | 9177 | Sonoma | 95407 | Santa Rosa | -122.701255 | 38.3933392 | 28.07 | 56.02 | 55-60% | No | 0.030 |
| 6077003203 | 3519 | San Joaquin | 95207 | Stockton | -121.336835 | 38.0173661 | 28.05 | 56.01 | 55-60% | No | 0.046 |
| 6071007410 | 5519 | San Bernardino | 92346 | Highland | -117.2108868 | 34.13216 | 28.05 | 56.00 | 55-60% | No | 0.068 |
| 6073004501 | 2875 | San Diego | 92102 | San Diego | -117.1381735 | 32.717632 | 28.04 | 55.98 | 55-60% | No | 0.038 |
| 6059075512 | 3548 | Orange | 92780 | Tustin | -117.8214885 | 33.7329217 | 28.04 | 55.97 | 55-60% | No | 0.048 |
| 6037910201 | 3549 | Los Angeles | 93551 | Palmdale | -118.1350954 | 34.615092 | 28.04 | 55.96 | 55-60% | No | 0.062 |
| 6085500901 | 3723 | Santa Clara | 95192 | San Jose | -121.8840872 | 37.3351796 | 28.03 | 55.95 | 55-60% | No | 0.035 |
| 6059076102 | 7487 | Orange | 92868 | Orange | -117.892793 | 33.7825729 | 28.02 | 55.93 | 55-60% | No | 0.046 |
| 6031000601 | 10021 | Kings | 93230 | Hanford | -119.6700353 | 36.3547616 | 28.02 | 55.92 | 55-60% | No | 0.062 |
| 6059110003 | 3194 | Orange | 92845 | Garden Grove | -118.0198654 | 33.7847215 | 28.02 | 55.91 | 55-60% | No | 0.044 |
| 6073008800 | 6188 | San Diego | 92111 | San Diego | -117.165353 | 32.7824761 | 27.99 | 55.90 | 55-60% | No | 0.042 |
| 6073010107 | 6498 | San Diego | 92154 | San Diego | -117.0793152 | 32.5820941 | 27.99 | 55.88 | 55-60% | No | 0.038 |
| 6085503508 | 6219 | Santa Clara | 95127 | San Jose | -121.81141 | 37.3545123 | 27.98 | 55.87 | 55-60% | No | 0.038 |
| 6077003208 | 12534 | San Joaquin | 95209 | Stockton | -121.3364443 | 38.0473226 | 27.98 | 55.86 | 55-60% | No | 0.046 |
| 6071011401 | 4394 | San Bernardino | 92314 | Big Bear City | -116.8481795 | 34.2528568 | 27.97 | 55.85 | 55-60% | No | 0.068 |
| 6059110010 | 4526 | Orange | 92845 | Garden Grove | -118.0197653 | 33.792026 | 27.96 | 55.83 | 55-60% | No | 0.044 |
| 6059063904 | 4658 | Orange | 92626 | Costa Mesa | -117.8989115 | 33.6714514 | 27.95 | 55.82 | 55-60% | No | 0.044 |
| 6071012001 | 5612 | San Bernardino | 92311 | Barstow | -117.0176358 | 34.8693342 | 27.95 | 55.81 | 55-60% | No | 0.060 |
| 6067009103 | 3495 | Sacramento | 95827 | Sacramento | -121.3407983 | 38.5548044 | 27.94 | 55.80 | 55-60% | No | 0.051 |
| 6065044103 | 5669 | Riverside | 92220 | Banning | -116.928801 | 33.9368755 | 27.92 | 55.78 | 55-60% | No | 0.068 |
| 6037272301 | 2941 | Los Angeles | 90066 | Los Angeles | -118.4222404 | 34.0050155 | 27.91 | 55.77 | 55-60% | No | 0.046 |
| 6111005003 | 8366 | Ventura | 93036 | Oxnard | -119.1583831 | 34.240782 | 27.90 | 55.76 | 55-60% | No | 0.044 |
| 6053014107 | 7088 | Monterey | 93908 | Salinas | -121.7884328 | 36.595286 | 27.90 | 55.74 | 55-60% | No | 0.035 |
| 6061020908 | 6706 | Placer | 95747 | Roseville | -121.3164942 | 38.7393452 | 27.90 | 55.73 | 55-60% | No | 0.053 |
| 6059099509 | 3491 | Orange | 90740 | Seal Beach | -118.0833849 | 33.7700681 | 27.90 | 55.72 | 55-60% | No | 0.044 |
| 6001438201 | 4540 | Alameda | 94544 | Hayward | -122.0764254 | 37.6261949 | 27.89 | 55.71 | 55-60% | No | 0.035 |
| 6037125502 | 3083 | Los Angeles | 91602 | North Hollywood | -118.3655446 | 34.1566286 | 27.88 | 55.69 | 55-60% | No | 0.053 |
| 6073020021 | 6423 | San Diego | 92069 | San Marcos | -117.1773755 | 33.1511693 | 27.88 | 55.68 | 55-60% | No | 0.046 |
| 6073003208 | 6619 | San Diego | 92139 | San Diego | -117.0452492 | 32.6786956 | 27.87 | 55.67 | 55-60% | No | 0.040 |
| 6065042731 | 5768 | Riverside | 92585 | Sun City | -117.2214271 | 33.7377126 | 27.87 | 55.66 | 55-60% | No | 0.062 |
| 6059001902 | 2967 | Orange | 92833 | Fullerton | -117.9548148 | 33.8637798 | 27.86 | 55.64 | 55-60% | No | 0.046 |
| 6081610203 | 3436 | San Mateo | 94063 | Redwood City | -122.2235825 | 37.4797023 | 27.86 | 55.63 | 55-60% | No | 0.033 |
| 6065043508 | 7014 | Riverside | 92583 | San Jacinto | -116.9425027 | 33.7611983 | 27.86 | 55.62 | 55-60% | No | 0.065 |
| 6057000502 | 4664 | Nevada | 95945 | Grass Valley | -121.0816502 | 39.2116634 | 27.84 | 55.61 | 55-60% | No | 0.057 |
| 6037405800 | 5881 | Los Angeles | 91722 | Covina | -117.9126798 | 34.1033944 | 27.84 | 55.59 | 55-60% | No | 0.053 |
| 6065043601 | 4505 | Riverside | 92583 | San Jacinto | -116.9530305 | 33.7834484 | 27.84 | 55.58 | 55-60% | No | 0.065 |
| 6071009110 | 15578 | San Bernardino | 92394 | Victorville | -117.3677478 | 34.5367769 | 27.82 | 55.57 | 55-60% | No | 0.065 |
| 6073018504 | 6631 | San Diego | 92054 | Oceanside | -117.3390811 | 33.1869954 | 27.82 | 55.56 | 55-60% | No | 0.042 |
| 6013304002 | 1426 | Contra Costa | 94505 | Discovery Bay | -121.6219157 | 37.8582825 | 27.82 | 55.54 | 55-60% | No | 0.044 |
| 6037501802 | 3326 | Los Angeles | 90602 | Whittier | -118.0292523 | 33.9679116 | 27.81 | 55.53 | 55-60% | No | 0.046 |
| 6073002401 | 4573 | San Diego | 92104 | San Diego | -117.1151978 | 32.7470742 | 27.81 | 55.52 | 55-60% | No | 0.040 |
| 6037601301 | 1915 | Los Angeles | 90302 | Inglewood | -118.363824 | 33.9791778 | 27.80 | 55.51 | 55-60% | No | 0.046 |
| 6019005701 | 3697 | Fresno | 93611 | Clovis | -119.6909537 | 36.8303592 | 27.79 | 55.49 | 55-60% | No | 0.065 |
| 6085505203 | 4809 | Santa Clara | 95050 | Santa Clara | -121.9331084 | 37.3470382 | 27.78 | 55.48 | 55-60% | No | 0.035 |
| 6019005405 | 4145 | Fresno | 93710 | Fresno | -119.7677223 | 36.826646 | 27.78 | 55.47 | 55-60% | No | 0.065 |

| | | | | | | | | | | |
|---|---|---|---|---|---|---|---|---|---|---|
| 6065042741 | 2142 | Riverside | 92586 | Sun City | -117.1983059 | 33.7161589 | 27.77 | 55.45 | 55-60% | No |
| 6097151401 | 7306 | Sonoma | 95404 | Santa Rosa | -122.6875017 | 38.4082641 | 27.77 | 55.44 | 55-60% | No |
| 6059088107 | 5866 | Orange | 92841 | Garden Grove | -117.9756059 | 33.7775512 | 27.76 | 55.43 | 55-60% | No |
| 6019004210 | 3480 | Fresno | 93722 | Fresno | -119.8702212 | 36.8321013 | 27.75 | 55.42 | 55-60% | No |
| 6073021100 | 7589 | San Diego | 91906 | Campo | -116.456874 | 32.7026541 | 27.75 | 55.40 | 55-60% | No |
| 6001423100 | 3964 | Alameda | 94702 | Berkeley | -122.2863197 | 37.865807 | 27.74 | 55.39 | 55-60% | No |
| 6037119341 | 2719 | Los Angeles | 91402 | Panorama City | -118.4458757 | 34.2371667 | 27.74 | 55.38 | 55-60% | No |
| 6067007402 | 6180 | Sacramento | 95660 | North Highlands | -121.3791846 | 38.6869533 | 27.73 | 55.37 | 55-60% | No |
| 6001440308 | 5883 | Alameda | 94587 | Union City | -122.0278186 | 37.5893439 | 27.73 | 55.35 | 55-60% | No |
| 6037192410 | 3628 | Los Angeles | 90004 | Los Angeles | -118.3181008 | 34.0798577 | 27.73 | 55.34 | 55-60% | No |
| 6111005205 | 5767 | Ventura | 93010 | Camarillo | -119.0878362 | 34.2350542 | 27.73 | 55.33 | 55-60% | No |
| 6037143604 | 3205 | Los Angeles | 91604 | Studio City | -118.3681384 | 34.1420581 | 27.72 | 55.32 | 55-60% | No |
| 6071007904 | 6697 | San Bernardino | 92346 | Highland | -117.1523698 | 34.1021545 | 27.72 | 55.30 | 55-60% | No |
| 6025012302 | 4756 | Imperial | 92274 | Thermal | -115.8770315 | 33.27526 | 27.72 | 55.29 | 55-60% | No |
| 6001440307 | 4219 | Alameda | 94587 | Union City | -122.0486869 | 37.5911419 | 27.71 | 55.28 | 55-60% | No |
| 6099003905 | 3871 | Stanislaus | 95380 | Turlock | -120.8252426 | 37.4998207 | 27.71 | 55.27 | 55-60% | No |
| 6073013802 | 2957 | San Diego | 91977 | Spring Valley | -117.0104099 | 32.734589 | 27.70 | 55.25 | 55-60% | No |
| 6067000400 | 3667 | Sacramento | 95816 | Sacramento | -121.4693603 | 38.5800964 | 27.68 | 55.24 | 55-60% | No |
| 6073020029 | 4819 | San Diego | 92078 | San Marcos | -117.189465 | 33.1392223 | 27.68 | 55.23 | 55-60% | No |
| 6065043513 | 2456 | Riverside | 92583 | San Jacinto | -116.928542 | 33.7748145 | 27.68 | 55.22 | 55-60% | No |
| 6073002709 | 3945 | San Diego | 92105 | San Diego | -117.0896386 | 32.7439931 | 27.67 | 55.20 | 55-60% | No |
| 6037900501 | 6764 | Los Angeles | 93535 | Lancaster | -118.1206518 | 34.6836304 | 27.67 | 55.19 | 55-60% | No |
| 6073013907 | 4185 | San Diego | 91977 | Spring Valley | -117.0027482 | 32.7202478 | 27.66 | 55.18 | 55-60% | No |
| 6099000101 | 4928 | Stanislaus | 95230 | Farmington | -120.831488 | 37.8903605 | 27.65 | 55.16 | 55-60% | No |
| 6039000102 | 4163 | Madera | 93644 | Oakhurst | -119.3767852 | 37.3965946 | 27.64 | 55.15 | 55-60% | No |
| 6071010016 | 5584 | San Bernardino | 92345 | Hesperia | -117.3552403 | 34.4348061 | 27.63 | 55.14 | 55-60% | No |
| 6037576801 | 4325 | Los Angeles | 90814 | Long Beach | -118.1642818 | 33.7715757 | 27.63 | 55.13 | 55-60% | No |
| 6089012301 | 2578 | Shasta | 96007 | Anderson | -122.352295 | 40.4748672 | 27.63 | 55.11 | 55-60% | No |
| 6095251400 | 5357 | Solano | 94589 | Vallejo | -122.23956 | 38.1237134 | 27.62 | 55.10 | 55-60% | No |
| 6059088201 | 4022 | Orange | 92841 | Garden Grove | -117.9631284 | 33.7958279 | 27.62 | 55.09 | 55-60% | No |
| 6073002201 | 3796 | San Diego | 92105 | San Diego | -117.1124957 | 32.7524807 | 27.61 | 55.08 | 55-60% | No |
| 6037501503 | 5016 | Los Angeles | 90601 | Whittier | -118.0364753 | 33.9861018 | 27.61 | 55.06 | 55-60% | No |
| 6045011300 | 5972 | Mendocino | 95482 | Ukiah | -123.2858932 | 39.1031607 | 27.61 | 55.05 | 55-60% | No |
| 6001443002 | 5918 | Alameda | 94538 | Fremont | -121.9605916 | 37.5168344 | 27.61 | 55.04 | 55-60% | No |
| 6067001400 | 2466 | Sacramento | 95816 | Sacramento | -121.4721306 | 38.573984 | 27.60 | 55.03 | 55-60% | No |
| 6037297602 | 3503 | Los Angeles | 90731 | San Pedro | -118.2903209 | 33.7159024 | 27.60 | 55.01 | 55-60% | No |
| 6065044404 | 1860 | Riverside | 92549 | Idyllwild | -116.7880179 | 33.7705133 | 27.59 | 55.00 | 55-60% | No |
| 6001406300 | 4113 | Alameda | 94601 | Oakland | -122.2250125 | 37.7892881 | 27.59 | 54.99 | 50-55% | No |
| 6037216401 | 4189 | Los Angeles | 90035 | Los Angeles | -118.3797435 | 34.0566897 | 27.58 | 54.98 | 50-55% | No |
| 6013374000 | 4506 | Contra Costa | 94804 | Richmond | -122.3414882 | 37.9394176 | 27.58 | 54.96 | 50-55% | No |
| 6037900607 | 3904 | Los Angeles | 93535 | Lancaster | -118.1241061 | 34.6932022 | 27.57 | 54.95 | 50-55% | No |
| 6085503118 | 5474 | Santa Clara | 95122 | San Jose | -121.8429997 | 37.3186901 | 27.56 | 54.94 | 50-55% | No |
| 6001444602 | 4014 | Alameda | 94560 | Newark | -122.0030673 | 37.5122564 | 27.55 | 54.92 | 50-55% | No |
| 6023010800 | 4785 | Humboldt | 95551 | Loleta | -124.2233155 | 40.6530627 | 27.55 | 54.91 | 50-55% | No |
| 6037406601 | 5269 | Los Angeles | 91791 | West Covina | -117.9166732 | 34.055737 | 27.55 | 54.90 | 50-55% | No |
| 6071009112 | 8744 | San Bernardino | 92301 | Adelanto | -117.4161754 | 34.5136022 | 27.53 | 54.89 | 50-55% | No |
| 6067009900 | 3976 | Sacramento | 95690 | Walnut Grove | -121.5387474 | 38.2710059 | 27.53 | 54.87 | 50-55% | No |
| 6019004602 | 2555 | Fresno | 93704 | Fresno | -119.8084855 | 36.8011471 | 27.52 | 54.86 | 50-55% | No |
| 6071011002 | 1673 | San Bernardino | 92407 | San Bernardino | -117.2142148 | 34.1980613 | 27.51 | 54.85 | 50-55% | No |
| 6053014000 | 2637 | Monterey | 93955 | Seaside | -121.848484 | 36.6152554 | 27.49 | 54.84 | 50-55% | No |
| 6037269904 | 3902 | Los Angeles | 90034 | Los Angeles | -118.411879 | 34.027809 | 27.49 | 54.82 | 50-55% | No |
| 6075061100 | 4307 | San Francisco | 94111 | San Francisco | -122.4040647 | 37.7955998 | 27.49 | 54.81 | 50-55% | No |
| 6067006004 | 2319 | Sacramento | 95821 | Sacramento | -121.3737088 | 38.6249563 | 27.48 | 54.80 | 50-55% | No |
| 6097152802 | 6807 | Sonoma | 95403 | Santa Rosa | -122.7356597 | 38.4651445 | 27.48 | 54.79 | 50-55% | No |
| 6073013906 | 4701 | San Diego | 91977 | Spring Valley | -117.0071856 | 32.7267911 | 27.47 | 54.77 | 50-55% | No |
| 6081602000 | 7649 | San Mateo | 94080 | South San Francisco | -122.4203403 | 37.6678381 | 27.47 | 54.76 | 50-55% | No |
| 6011000100 | 5183 | Colusa | 95912 | Arbuckle | -122.0142763 | 39.003105 | 27.47 | 54.75 | 50-55% | No |
| 6101050701 | 4358 | Sutter | 95953 | Live Oak | -121.653915 | 39.2827425 | 27.46 | 54.74 | 50-55% | No |
| 6067009111 | 5539 | Sacramento | 95826 | Sacramento | -121.3639394 | 38.5419331 | 27.45 | 54.72 | 50-55% | No |
| 6037141304 | 2738 | Los Angeles | 91403 | Sherman Oaks | -118.4526303 | 34.1509932 | 27.44 | 54.71 | 50-55% | No |
| 6001433800 | 7369 | Alameda | 94578 | San Leandro | -122.123482 | 37.6988143 | 27.43 | 54.70 | 50-55% | No |
| 6065046602 | 3712 | Riverside | 92860 | Norco | -117.5749825 | 33.912597 | 27.43 | 54.69 | 50-55% | No |
| 6037431900 | 3828 | Los Angeles | 91780 | Temple City | -118.060063 | 34.1103131 | 27.43 | 54.67 | 50-55% | No |
| 6053011204 | 3190 | Monterey | 93960 | Soledad | -121.2467936 | 36.3445599 | 27.41 | 54.66 | 50-55% | No |
| 6037106642 | 3236 | Los Angeles | 91344 | Granada Hills | -118.5070136 | 34.2863224 | 27.40 | 54.65 | 50-55% | No |
| 6037111302 | 4786 | Los Angeles | 91325 | Northridge | -118.5128425 | 34.2539511 | 27.39 | 54.63 | 50-55% | No |
| 6037134306 | 3498 | Los Angeles | 91304 | Canoga Park | -118.6017021 | 34.2119148 | 27.38 | 54.62 | 50-55% | No |
| 6001409800 | 2887 | Alameda | 94605 | Oakland | -122.1557636 | 37.7603609 | 27.38 | 54.61 | 50-55% | No |
| 6089012102 | 1916 | Shasta | 96007 | Anderson | -122.2692975 | 40.455518 | 27.36 | 54.60 | 50-55% | No |
| 6001436601 | 6091 | Alameda | 94544 | Hayward | -122.0788937 | 37.6567907 | 27.36 | 54.58 | 50-55% | No |
| 6067008133 | 2652 | Sacramento | 95841 | Sacramento | -121.331598 | 38.6657665 | 27.36 | 54.57 | 50-55% | No |
| 6059099229 | 6312 | Orange | 92708 | Fountain Valley | -117.943544 | 33.7037205 | 27.35 | 54.56 | 50-55% | No |
| 6073003115 | 6454 | San Diego | 92114 | San Diego | -117.0379718 | 32.6955807 | 27.35 | 54.55 | 50-55% | No |
| 6037920034 | 3628 | Los Angeles | 91351 | Canyon Country | -118.4511824 | 34.4388053 | 27.34 | 54.53 | 50-55% | No |
| 6037401800 | 7378 | Los Angeles | 91711 | Claremont | -117.7163166 | 34.1151327 | 27.34 | 54.52 | 50-55% | No |
| 6001405500 | 3643 | Alameda | 94606 | Oakland | -122.243279 | 37.7982821 | 27.34 | 54.51 | 50-55% | No |
| 6037139503 | 4657 | Los Angeles | 91316 | Encino | -118.5245194 | 34.167785 | 27.33 | 54.50 | 50-55% | No |
| 6067007415 | 3039 | Sacramento | 95842 | Sacramento | -121.3467505 | 38.6790053 | 27.33 | 54.48 | 50-55% | No |
| 6071010009 | 3511 | San Bernardino | 92392 | Victorville | -117.3823277 | 34.4486872 | 27.32 | 54.47 | 50-55% | No |
| 6037300902 | 1998 | Los Angeles | 91206 | Glendale | -118.2004184 | 34.1541923 | 27.32 | 54.46 | 50-55% | No |
| 6073002712 | 4652 | San Diego | 92105 | San Diego | -117.0732171 | 32.7297628 | 27.31 | 54.45 | 50-55% | No |
| 6029003600 | 4531 | Kern | 93268 | Taft | -119.4622032 | 35.1294919 | 27.29 | 54.43 | 50-55% | No |
| 6037272202 | 3378 | Los Angeles | 90066 | Los Angeles | -118.4391488 | 33.9975533 | 27.29 | 54.42 | 50-55% | No |
| 6101051000 | 2461 | Sutter | 95993 | Yuba City | -121.6633133 | 39.0342246 | 27.29 | 54.41 | 50-55% | No |
| 6037183401 | 2543 | Los Angeles | 90042 | Los Angeles | -118.2092262 | 34.1216662 | 27.29 | 54.40 | 50-55% | No |
| 6037554517 | 4883 | Los Angeles | 90703 | Cerritos | -118.0548956 | 33.8623387 | 27.28 | 54.38 | 50-55% | No |
| 6053010505 | 4892 | Monterey | 93906 | Salinas | -121.6494212 | 36.7291549 | 27.28 | 54.37 | 50-55% | No |
| 6037211704 | 3016 | Los Angeles | 90020 | Los Angeles | -118.3115783 | 34.0635115 | 27.28 | 54.36 | 50-55% | No |
| 6001433104 | 3760 | Alameda | 94578 | San Leandro | -122.1469937 | 37.7142641 | 27.27 | 54.34 | 50-55% | No |
| 6007003600 | 3404 | Butte | 95917 | Biggs | -121.7723641 | 39.4540994 | 27.26 | 54.33 | 50-55% | No |
| 6059088403 | 6896 | Orange | 92840 | Garden Grove | -117.9105799 | 33.7888906 | 27.25 | 54.32 | 50-55% | No |
| 6069000200 | 6051 | San Benito | 95045 | San Juan Bautista | -121.5185873 | 36.8257446 | 27.24 | 54.31 | 50-55% | No |
| 6107002004 | 4910 | Tulare | 93277 | Visalia | -119.3405353 | 36.3055269 | 27.23 | 54.29 | 50-55% | No |
| 6025011801 | 3821 | Imperial | 92243 | El Centro | -115.5867417 | 32.7833547 | 27.22 | 54.28 | 50-55% | No |
| 6001407000 | 5885 | Alameda | 94619 | Oakland | -122.2024899 | 37.787943 | 27.21 | 54.27 | 50-55% | No |
| 6059075404 | 6347 | Orange | 92705 | Santa Ana | -117.8477516 | 33.7679798 | 27.20 | 54.26 | 50-55% | No |
| 6029000905 | 2483 | Kern | 93306 | Bakersfield | -118.9585218 | 35.3794847 | 27.19 | 54.24 | 50-55% | No |
| 6037701602 | 4037 | Los Angeles | 90404 | Santa Monica | -118.4754273 | 34.0350094 | 27.18 | 54.23 | 50-55% | No |
| 6001407101 | 3414 | Alameda | 94601 | Oakland | -122.2143966 | 37.7831287 | 27.18 | 54.22 | 50-55% | No |
| 6037119201 | 4137 | Los Angeles | 91331 | Pacoima | -118.440639 | 34.2462338 | 27.17 | 54.21 | 50-55% | No |
| 6071007903 | 4365 | San Bernardino | 92346 | Highland | -117.1817526 | 34.1157924 | 27.16 | 54.19 | 50-55% | No |
| 6055200201 | 3466 | Napa | 94559 | Napa | -122.2978739 | 38.2918154 | 27.14 | 54.18 | 50-55% | No |
| 6019005407 | 3139 | Fresno | 93710 | Fresno | -119.7450732 | 36.8339103 | 27.14 | 54.17 | 50-55% | No |
| 6037137201 | 5270 | Los Angeles | 91367 | Woodland Hills | -118.6156256 | 34.1732437 | 27.13 | 54.16 | 50-55% | No |
| 6071010022 | 4084 | San Bernardino | 92345 | Hesperia | -117.2516056 | 34.4033595 | 27.13 | 54.14 | 50-55% | No |
| 6037102103 | 1740 | Los Angeles | 91352 | Sun Valley | -118.354188 | 34.2250793 | 27.13 | 54.13 | 50-55% | No |
| 6037101220 | 3363 | Los Angeles | 91042 | Tujunga | -118.2816322 | 34.2516085 | 27.12 | 54.12 | 50-55% | No |
| 6067005201 | 3040 | Sacramento | 95826 | Sacramento | -121.4229418 | 38.5590043 | 27.11 | 54.11 | 50-55% | No |
| 6029003123 | 15296 | Kern | 93311 | Bakersfield | -119.0986803 | 35.3050623 | 27.10 | 54.09 | 50-55% | No |
| 6067005904 | 4825 | Sacramento | 95821 | Sacramento | -121.3564193 | 38.6206259 | 27.10 | 54.08 | 50-55% | No |
| 6065041003 | 2521 | Riverside | 92505 | Riverside | -117.4904563 | 33.9486696 | 27.09 | 54.07 | 50-55% | No |
| 6059075504 | 4041 | Orange | 92780 | Tustin | -117.8244625 | 33.7530974 | 27.08 | 54.05 | 50-55% | No |
| 6065040807 | 3391 | Riverside | 92880 | Corona | -117.5896691 | 33.9048789 | 27.08 | 54.04 | 50-55% | No |
| 6037128802 | 4325 | Los Angeles | 91411 | Van Nuys | -118.4552597 | 34.1684788 | 27.07 | 54.03 | 50-55% | No |
| 6059075513 | 5074 | Orange | 92780 | Tustin | -117.8147887 | 33.7284876 | 27.06 | 54.02 | 50-55% | No |
| 6037194500 | 2037 | Los Angeles | 90048 | Los Angeles | -118.3695958 | 34.0781753 | 27.06 | 54.00 | 50-55% | No |
| 6007000903 | 6117 | Butte | 95928 | Chico | -121.7982097 | 39.726274 | 27.05 | 53.99 | 50-55% | No |
| 6037183222 | 3483 | Los Angeles | 90041 | Los Angeles | -118.1973377 | 34.1291804 | 27.05 | 53.98 | 50-55% | No |
| 6067002800 | 3291 | Sacramento | 95817 | Sacramento | -121.4582463 | 38.5429371 | 27.05 | 53.97 | 50-55% | No |
| 6065045213 | 5216 | Riverside | 92201 | Indio | -116.2596224 | 33.7142853 | 27.04 | 53.95 | 50-55% | No |
| 6059062610 | 6393 | Orange | 92660 | Newport Beach | -117.8609131 | 33.6691905 | 27.03 | 53.94 | 50-55% | No |
| 6029002819 | 4586 | Kern | 93309 | Bakersfield | -119.0823051 | 35.323044 | 27.00 | 53.93 | 50-55% | No |
| 6037401312 | 5575 | Los Angeles | 91773 | San Dimas | -117.8289334 | 34.0988537 | 27.00 | 53.92 | 50-55% | No |
| 6037462001 | 3974 | Los Angeles | 91104 | Pasadena | -118.1438322 | 34.1633689 | 26.98 | 53.90 | 50-55% | No |
| 6001408600 | 5492 | Alameda | 94605 | Oakland | -122.1823031 | 37.7661964 | 26.98 | 53.89 | 50-55% | No |
| 6037189600 | 3529 | Los Angeles | 90068 | Los Angeles | -118.3297619 | 34.1113557 | 26.97 | 53.88 | 50-55% | No |
| 6065043506 | 6386 | Riverside | 92582 | San Jacinto | -116.994327 | 33.7696784 | 26.97 | 53.87 | 50-55% | No |
| 6067007602 | 4619 | Sacramento | 95608 | Carmichael | -121.337082 | 38.6317698 | 26.97 | 53.85 | 50-55% | No |
| 6001422200 | 3144 | Alameda | 94702 | Berkeley | -122.2878154 | 37.8728822 | 26.97 | 53.84 | 50-55% | No |
| 6103000500 | 5507 | Tehama | 96080 | Red Bluff | -122.2577045 | 40.1970846 | 26.96 | 53.83 | 50-55% | No |
| 6109002100 | 4439 | Tuolumne | 95335 | Long Barn | -120.1895292 | 38.2149739 | 26.96 | 53.82 | 50-55% | No |
| 6111000701 | 6441 | Ventura | 93060 | Santa Paula | -119.0772575 | 34.3453966 | 26.95 | 53.80 | 50-55% | No |
| 6037550602 | 4211 | Los Angeles | 90240 | Downey | -118.1223634 | 33.9551248 | 26.93 | 53.79 | 50-55% | No |
| 6029005300 | 2139 | Kern | 93555 | Ridgecrest | -117.7286899 | 35.7285096 | 26.92 | 53.78 | 50-55% | No |
| 6005000303 | 5073 | Amador | 95640 | Ione | -120.9288239 | 38.3544187 | 26.92 | 53.76 | 50-55% | No |
| 6067009322 | 13206 | Sacramento | 95624 | Elk Grove | -121.389656 | 38.4461568 | 26.92 | 53.75 | 50-55% | No |
| 6037408624 | 3227 | Los Angeles | 91745 | Hacienda Heights | -117.9490627 | 33.9934354 | 26.92 | 53.74 | 50-55% | No |
| 6065043512 | 6580 | Riverside | 92583 | San Jacinto | -116.9444017 | 33.7716288 | 26.91 | 53.73 | 50-55% | No |
| 6013383000 | 4485 | Contra Costa | 94804 | Richmond | -122.3117391 | 37.9090127 | 26.91 | 53.71 | 50-55% | No |
| 6095252607 | 3819 | Solano | 94533 | Fairfield | -122.0297407 | 38.2544056 | 26.90 | 53.70 | 50-55% | No |
| 6079011103 | 2737 | San Luis Obispo | 93401 | San Luis Obispo | -120.6603827 | 35.2563505 | 26.90 | 53.69 | 50-55% | No |
| 6041112201 | 7809 | Marin | 94901 | San Rafael | -122.505765 | 37.9659228 | 26.90 | 53.68 | 50-55% | No |
| 6073002703 | 6900 | San Diego | 92115 | San Diego | -117.0658125 | 32.7451078 | 26.89 | 53.66 | 50-55% | No |
| 6007000604 | 4217 | Butte | 95926 | Chico | -121.8573274 | 39.7358332 | 26.89 | 53.65 | 50-55% | No |
| 6065043820 | 3895 | Riverside | 92223 | Beaumont | -116.9605059 | 33.9186218 | 26.88 | 53.64 | 50-55% | No |
| 6081601200 | 6252 | San Mateo | 94015 | Daly City | -122.4784484 | 37.6932383 | 26.88 | 53.63 | 50-55% | No |
| 6071008602 | 3564 | San Bernardino | 92359 | Mentone | -117.0889857 | 34.070874 | 26.86 | 53.61 | 50-55% | No |
| 6071012103 | 3828 | San Bernardino | 92356 | Lucerne Valley | -116.9358977 | 34.4032519 | 26.85 | 53.60 | 50-55% | No |
| 6013328000 | 2281 | Contra Costa | 94520 | Concord | -122.0377689 | 37.975617 | 26.85 | 53.59 | 50-55% | No |
| 6037183402 | 2820 | Los Angeles | 90041 | Los Angeles | -118.2164099 | 34.1257206 | 26.84 | 53.58 | 50-55% | No |
| 6073003003 | 5062 | San Diego | 92114 | San Diego | -117.0575534 | 32.7250639 | 26.82 | 53.56 | 50-55% | No |
| 6037482201 | 3813 | Los Angeles | 91755 | Monterey Park | -118.1219962 | 34.0590071 | 26.82 | 53.55 | 50-55% | No |
| 6085503707 | 5462 | Santa Clara | 95116 | San Jose | -121.8538119 | 37.3579135 | 26.81 | 53.54 | 50-55% | No |
| 6097153808 | 4251 | Sonoma | 95492 | Windsor | -122.8080845 | 38.5426791 | 26.80 | 53.53 | 50-55% | No |
| 6111001507 | 4330 | Ventura | 93003 | Ventura | -119.2029688 | 34.2540321 | 26.80 | 53.51 | 50-55% | No |
| 6059089107 | 5944 | Orange | 92706 | Santa Ana | -117.9004522 | 33.7705331 | 26.78 | 53.50 | 50-55% | No |
| 6073002705 | 4300 | San Diego | 92105 | San Diego | -117.0835759 | 32.7338692 | 26.77 | 53.49 | 50-55% | No |
| 6037900104 | 6242 | Los Angeles | 93591 | Palmdale | -117.8491551 | 34.5925627 | 26.76 | 53.47 | 50-55% | No |
| 6067007802 | 4808 | Sacramento | 95608 | Carmichael | -121.3172579 | 38.6153284 | 26.76 | 53.46 | 50-55% | No |
| 6065042715 | 12805 | Riverside | 92532 | Lake Elsinore | -117.3025976 | 33.6868295 | 26.75 | 53.45 | 50-55% | No |
| 6081604102 | 2321 | San Mateo | 94066 | San Bruno | -122.4257557 | 37.6331747 | 26.74 | 53.44 | 50-55% | No |
| 6089010100 | 1581 | Shasta | 96001 | Redding | -122.3905251 | 40.5827822 | 26.73 | 53.42 | 50-55% | No |
| 6073013203 | 6464 | San Diego | 91911 | Chula Vista | -117.0642137 | 32.6067804 | 26.73 | 53.41 | 50-55% | No |
| 6065045501 | 5518 | Riverside | 92201 | Indio | -116.2261101 | 33.7070064 | 26.73 | 53.40 | 50-55% | No |
| 6037570702 | 2433 | Los Angeles | 90712 | Lakewood | -118.1595642 | 33.8505787 | 26.73 | 53.39 | 50-55% | No |
| 6067008131 | 4922 | Sacramento | 95621 | Citrus Heights | -121.3261844 | 38.6817548 | 26.72 | 53.37 | 50-55% | No |
| 6085503708 | 2725 | Santa Clara | 95133 | San Jose | -121.8546427 | 37.3694495 | 26.70 | 53.36 | 50-55% | No |
| 6077001200 | 5303 | San Joaquin | 95204 | Stockton | -121.3089795 | 37.9724931 | 26.69 | 53.35 | 50-55% | No |
| 6037481902 | 3355 | Los Angeles | 91803 | Alhambra | -118.1501366 | 34.0661164 | 26.68 | 53.34 | 50-55% | No |
| 6037134302 | 3732 | Los Angeles | 91304 | Canoga Park | -118.6209257 | 34.2136956 | 26.67 | 53.32 | 50-55% | No |
| 6059110607 | 3845 | Orange | 90621 | Buena Park | -117.9954094 | 33.8797283 | 26.67 | 53.31 | 50-55% | No |
| 6059063908 | 5430 | Orange | 92626 | Costa Mesa | -117.8854711 | 33.6826205 | 26.66 | 53.30 | 50-55% | No |
| 6001410200 | 3062 | Alameda | 94603 | Oakland | -122.1571742 | 37.7453063 | 26.66 | 53.29 | 50-55% | No |
| 6059021802 | 7091 | Orange | 92886 | Yorba Linda | -117.8163112 | 33.8895406 | 26.65 | 53.27 | 50-55% | No |
| 6001440200 | 5989 | Alameda | 94587 | Union City | -122.0225206 | 37.6003676 | 26.65 | 53.26 | 50-55% | No |
| 6001402900 | 1434 | Alameda | 94612 | Oakland | -122.26681 | 37.8071501 | 26.65 | 53.25 | 50-55% | No |
| 6037406402 | 2076 | Los Angeles | 91791 | West Covina | -117.9005028 | 34.0580051 | 26.64 | 53.23 | 50-55% | No |
| 6095253402 | 6940 | Solano | 95620 | Dixon | -121.8169166 | 38.4428124 | 26.63 | 53.22 | 50-55% | No |
| 6087122300 | 3943 | Santa Cruz | 95076 | Watsonville | -121.8155301 | 36.9028173 | 26.62 | 53.21 | 50-55% | No |
| 6071004503 | 3327 | San Bernardino | 92407 | San Bernardino | -117.3872118 | 34.2199541 | 26.62 | 53.20 | 50-55% | No |
| 6085502001 | 5022 | Santa Clara | 95128 | San Jose | -121.933096 | 37.3224697 | 26.62 | 53.18 | 50-55% | No |
| 6013372000 | 7353 | Contra Costa | 94804 | Richmond | -122.3399755 | 37.9485499 | 26.62 | 53.17 | 50-55% | No |
| 6037101400 | 3903 | Los Angeles | 91042 | Tujunga | -118.2941635 | 34.2428534 | 26.62 | 53.16 | 50-55% | No |
| 6059099212 | 4914 | Orange | 92647 | Huntington Beach | -117.9847331 | 33.708349 | 26.62 | 53.15 | 50-55% | No |
| 6037296300 | 4221 | Los Angeles | 90732 | San Pedro | -118.3012745 | 33.7545886 | 26.61 | 53.13 | 50-55% | No |
| 6083002702 | 7395 | Santa Barbara | 93436 | Lompoc | -120.4666395 | 34.6431155 | 26.61 | 53.12 | 50-55% | No |
| 6019005514 | 3961 | Fresno | 93611 | Clovis | -119.7202981 | 36.8448035 | 26.61 | 53.11 | 50-55% | No |
| 6073012002 | 3285 | San Diego | 91950 | National City | -117.0792559 | 32.6817745 | 26.61 | 53.10 | 50-55% | No |
| 6053000103 | 3894 | Monterey | 93906 | Salinas | -121.6495279 | 36.7132772 | 26.59 | 53.08 | 50-55% | No |
| 6059099906 | 4866 | Orange | 92683 | Westminster | -118.0358073 | 33.7648072 | 26.58 | 53.07 | 50-55% | No |
| 6065043306 | 4538 | Riverside | 92545 | Hemet | -116.9996659 | 33.7332579 | 26.58 | 53.06 | 50-55% | No |
| 6037212702 | 3635 | Los Angeles | 90005 | Los Angeles | -118.3261907 | 34.0585147 | 26.58 | 53.05 | 50-55% | No |
| 6001440331 | 3205 | Alameda | 94587 | Union City | -122.0833307 | 37.5982227 | 26.57 | 53.03 | 50-55% | No |
| 6033000801 | 2894 | Lake | 95422 | Clearlake | -122.6301466 | 38.9388352 | 26.57 | 53.02 | 50-55% | No |
| 6001436700 | 3284 | Alameda | 94541 | Hayward | -122.1005196 | 37.6619708 | 26.56 | 53.01 | 50-55% | No |
| 6073020207 | 4765 | San Diego | 92027 | Escondido | -117.0539783 | 33.1334707 | 26.56 | 53.00 | 50-55% | No |
| 6037550902 | 5572 | Los Angeles | 90241 | Downey | -118.1251864 | 33.9477159 | 26.56 | 52.98 | 50-55% | No |
| 6013302008 | 7718 | Contra Costa | 94561 | Oakley | -121.6702095 | 37.9891088 | 26.54 | 52.97 | 50-55% | No |
| 6005000401 | 5020 | Amador | 95685 | Sutter Creek | -120.7589689 | 38.3970536 | 26.54 | 52.96 | 50-55% | No |
| 6053011304 | 6688 | Monterey | 93930 | King City | -121.0176253 | 36.246079 | 26.53 | 52.94 | 50-55% | No |
| 6037401202 | 4371 | Los Angeles | 91773 | San Dimas | -117.833697 | 34.1133365 | 26.53 | 52.93 | 50-55% | No |
| 6037551201 | 3588 | Los Angeles | 90242 | Downey | -118.1453112 | 33.9280828 | 26.53 | 52.92 | 50-55% | No |
| 6085504322 | 5263 | Santa Clara | 95131 | San Jose | -121.8929601 | 37.3943303 | 26.52 | 52.91 | 50-55% | No |
| 6073020202 | 6689 | San Diego | 92025 | Escondido | -117.0724073 | 33.131406 | 26.52 | 52.89 | 50-55% | No |
| 6059074110 | 3843 | Orange | 92704 | Santa Ana | -117.900654 | 33.7097314 | 26.50 | 52.88 | 50-55% | No |
| 6085512402 | 5167 | Santa Clara | 95046 | San Martin | -121.565875 | 37.0953132 | 26.50 | 52.87 | 50-55% | No |
| 6001437701 | 3649 | Alameda | 94544 | Hayward | -122.0697491 | 37.6348665 | 26.50 | 52.86 | 50-55% | No |
| 6065031200 | 6878 | Riverside | 92506 | Riverside | -117.3825351 | 33.9429752 | 26.47 | 52.84 | 50-55% | No |
| 6083002306 | 8810 | Santa Barbara | 93458 | Santa Maria | -120.4662189 | 34.9769533 | 26.46 | 52.83 | 50-55% | No |
| 6067007801 | 5481 | Sacramento | 95608 | Carmichael | -121.3149374 | 38.6313361 | 26.45 | 52.82 | 50-55% | No |
| 6037480101 | 3908 | Los Angeles | 91780 | Temple City | -118.0734404 | 34.1092057 | 26.45 | 52.81 | 50-55% | No |
| 6037920036 | 3419 | Los Angeles | 91351 | Canyon Country | -118.4758577 | 34.4215429 | 26.44 | 52.79 | 50-55% | No |
| 6085508800 | 3766 | Santa Clara | 94085 | Sunnyvale | -122.0247804 | 37.3851461 | 26.44 | 52.78 | 50-55% | No |
| 6053010501 | 6339 | Monterey | 93907 | Salinas | -121.6196088 | 36.7877533 | 26.44 | 52.77 | 50-55% | No |
| 6081607400 | 4451 | San Mateo | 94403 | San Mateo | -122.3122521 | 37.5443066 | 26.41 | 52.76 | 50-55% | No |
| 6085509000 | 7407 | Santa Clara | 94085 | Sunnyvale | -122.0216787 | 37.3922706 | 26.40 | 52.74 | 50-55% | No |
| 6113010608 | 5882 | Yolo | 95618 | Davis | -121.7210564 | 38.5422965 | 26.40 | 52.73 | 50-55% | No |
| 6037700400 | 5237 | Los Angeles | 90048 | Los Angeles | -118.3811478 | 34.0812987 | 26.39 | 52.72 | 50-55% | No |
| 6085500200 | 5822 | Santa Clara | 95110 | San Jose | -121.9021927 | 37.3498787 | 26.39 | 52.71 | 50-55% | No |
| 6037195100 | 4717 | Los Angeles | 90039 | Los Angeles | -118.2669741 | 34.1022274 | 26.38 | 52.69 | 50-55% | No |
| 6037109800 | 4565 | Los Angeles | 91343 | North Hills | -118.4815974 | 34.2537115 | 26.37 | 52.68 | 50-55% | No |

| | | | | | | | | | | | |
|---|---|---|---|---|---|---|---|---|---|---|---|
| 6071002109 | 4626 | San Bernardino | 91764 | Ontario | -117.5652839 | 34.0754307 | 26.37 | 52.67 | 50-55% | No | 0.062 |
| 6071010020 | 7471 | San Bernardino | 92345 | Hesperia | -117.2971249 | 34.4037817 | 26.37 | 52.65 | 50-55% | No | 0.065 |
| 6053014202 | 4075 | Monterey | 93933 | Marina | -121.7902463 | 36.6807321 | 26.37 | 52.64 | 50-55% | No | 0.035 |
| 6065045217 | 6225 | Riverside | 92201 | Indio | -116.2476921 | 33.7289861 | 26.37 | 52.63 | 50-55% | No | 0.062 |
| 6095252611 | 3263 | Solano | 94533 | Fairfield | -122.013868 | 38.2638928 | 26.36 | 52.62 | 50-55% | No | 0.040 |
| 6059011401 | 1982 | Orange | 92831 | Fullerton | -117.9180817 | 33.8797568 | 26.36 | 52.60 | 50-55% | No | 0.046 |
| 6065043810 | 4933 | Riverside | 92223 | Beaumont | -117.0005885 | 33.9554572 | 26.35 | 52.59 | 50-55% | No | 0.068 |
| 6037482102 | 2828 | Los Angeles | 91754 | Monterey Park | -118.1328703 | 34.050659 | 26.34 | 52.58 | 50-55% | No | 0.048 |
| 6065043311 | 2265 | Riverside | 92544 | Hemet | -116.9237749 | 33.7476958 | 26.34 | 52.57 | 50-55% | No | 0.065 |
| 6053010608 | 3646 | Monterey | 93905 | Salinas | -121.6223478 | 36.6951795 | 26.33 | 52.55 | 50-55% | No | 0.033 |
| 6067003501 | 2629 | Sacramento | 95822 | Sacramento | -121.4883176 | 38.5331684 | 26.33 | 52.54 | 50-55% | No | 0.046 |
| 6067007204 | 4965 | Sacramento | 95838 | Sacramento | -121.4462256 | 38.6623406 | 26.32 | 52.53 | 50-55% | No | 0.050 |
| 6059110011 | 2832 | Orange | 90630 | Cypress | -118.0196525 | 33.7993147 | 26.31 | 52.52 | 50-55% | No | 0.044 |
| 6065040701 | 2248 | Riverside | 92860 | Norco | -117.5759903 | 33.9319208 | 26.31 | 52.50 | 50-55% | No | 0.060 |
| 6029003807 | 3616 | Kern | 93312 | Bakersfield | -119.1188846 | 35.390736 | 26.31 | 52.49 | 50-55% | No | 0.062 |
| 6037111100 | 2982 | Los Angeles | 91344 | Granada Hills | -118.4950694 | 34.2683099 | 26.29 | 52.48 | 50-55% | No | 0.060 |
| 6023000100 | 4901 | Humboldt | 95501 | Eureka | -124.1717835 | 40.8040593 | 26.29 | 52.47 | 50-55% | No | 0.026 |
| 6059021814 | 6816 | Orange | 92821 | Brea | -117.8653441 | 33.9175293 | 26.28 | 52.45 | 50-55% | No | 0.048 |
| 6075012302 | 3073 | San Francisco | 94102 | San Francisco | -122.412097 | 37.7870223 | 26.28 | 52.44 | 50-55% | No | 0.030 |
| 6037650004 | 4005 | Los Angeles | 90504 | Torrance | -118.3308068 | 33.8773079 | 26.27 | 52.43 | 50-55% | No | 0.044 |
| 6107001901 | 3390 | Tulare | 93277 | Visalia | -119.3028348 | 36.3092952 | 26.26 | 52.42 | 50-55% | No | 0.060 |
| 6001410400 | 3792 | Alameda | 94603 | Oakland | -122.1621741 | 37.7408161 | 26.25 | 52.40 | 50-55% | No | 0.030 |
| 6037106020 | 5557 | Los Angeles | 91342 | Sylmar | -118.429739 | 34.3230145 | 26.25 | 52.39 | 50-55% | No | 0.060 |
| 6073015701 | 6239 | San Diego | 92021 | El Cajon | -116.9420918 | 32.7977009 | 26.23 | 52.38 | 50-55% | No | 0.046 |
| 6037111202 | 5213 | Los Angeles | 91344 | Granada Hills | -118.5148271 | 34.2684432 | 26.23 | 52.36 | 50-55% | No | 0.060 |
| 6037501900 | 4213 | Los Angeles | 90605 | Whittier | -118.0274643 | 33.9558907 | 26.23 | 52.35 | 50-55% | No | 0.046 |
| 6073008702 | 5206 | San Diego | 92123 | San Diego | -117.155885 | 32.7883567 | 26.22 | 52.34 | 50-55% | No | 0.042 |
| 6067009408 | 1783 | Sacramento | 95632 | Galt | -121.2724934 | 38.2711241 | 26.22 | 52.33 | 50-55% | No | 0.048 |
| 6059052411 | 5182 | Orange | 92630 | Lake Forest | -117.7041363 | 33.6236733 | 26.22 | 52.31 | 50-55% | No | 0.050 |
| 6067005510 | 4291 | Sacramento | 95825 | Sacramento | -121.4060948 | 38.5851649 | 26.21 | 52.30 | 50-55% | No | 0.050 |
| 6037183510 | 2725 | Los Angeles | 90042 | Los Angeles | -118.2030827 | 34.1154022 | 26.21 | 52.29 | 50-55% | No | 0.048 |
| 6037910401 | 6608 | Los Angeles | 93551 | Palmdale | -118.1534038 | 34.5754635 | 26.20 | 52.28 | 50-55% | No | 0.062 |
| 6073018603 | 6810 | San Diego | 92058 | Oceanside | -117.3586267 | 33.2115108 | 26.20 | 52.26 | 50-55% | No | 0.042 |
| 6037401701 | 4137 | Los Angeles | 91711 | Claremont | -117.743532 | 34.1143655 | 26.20 | 52.25 | 50-55% | No | 0.060 |
| 6001451501 | 4668 | Alameda | 94550 | Livermore | -121.7369701 | 37.6733434 | 26.20 | 52.24 | 50-55% | No | 0.040 |
| 6053010804 | 5029 | Monterey | 93926 | Gonzales | -121.4841399 | 36.4990122 | 26.19 | 52.23 | 50-55% | No | 0.038 |
| 6037109604 | 2975 | Los Angeles | 91345 | Mission Hills | -118.4653518 | 34.2615445 | 26.19 | 52.21 | 50-55% | No | 0.057 |
| 6037137104 | 2717 | Los Angeles | 91367 | Woodland Hills | -118.5849467 | 34.1737607 | 26.17 | 52.20 | 50-55% | No | 0.057 |
| 6065046401 | 3768 | Riverside | 92530 | Lake Elsinore | -117.4050045 | 33.5708213 | 26.16 | 52.19 | 50-55% | No | 0.055 |
| 6037311200 | 3138 | Los Angeles | 91505 | Burbank | -118.3531198 | 34.1720062 | 26.16 | 52.18 | 50-55% | No | 0.055 |
| 6077004106 | 1913 | San Joaquin | 95242 | Lodi | -121.3575793 | 38.1241929 | 26.15 | 52.16 | 50-55% | No | 0.046 |
| 6071011001 | 2390 | San Bernardino | 92407 | San Bernardino | -117.2139066 | 34.2379157 | 26.14 | 52.15 | 50-55% | No | 0.068 |
| 6083002705 | 4210 | Santa Barbara | 93436 | Lompoc | -120.4677464 | 34.6504892 | 26.13 | 52.14 | 50-55% | No | 0.038 |
| 6085505006 | 3898 | Santa Clara | 95134 | San Jose | -121.921025 | 37.3933698 | 26.13 | 52.13 | 50-55% | No | 0.035 |
| 6059087704 | 5061 | Orange | 92804 | Anaheim | -117.9545102 | 33.8104768 | 26.12 | 52.11 | 50-55% | No | 0.046 |
| 6067009112 | 3630 | Sacramento | 95826 | Sacramento | -121.3457916 | 38.538965 | 26.12 | 52.10 | 50-55% | No | 0.051 |
| 6053011302 | 5813 | Monterey | 93930 | King City | -121.1254387 | 36.2128109 | 26.12 | 52.09 | 50-55% | No | 0.038 |
| 6067007020 | 4034 | Sacramento | 95833 | Sacramento | -121.5308587 | 38.6092575 | 26.11 | 52.07 | 50-55% | No | 0.048 |
| 6085504805 | 5294 | Santa Clara | 94089 | Sunnyvale | -122.0033848 | 37.4031482 | 26.11 | 52.06 | 50-55% | No | 0.035 |
| 6067005202 | 3154 | Sacramento | 95826 | Sacramento | -121.394154 | 38.5593317 | 26.11 | 52.05 | 50-55% | No | 0.050 |
| 6071009114 | 10232 | San Bernardino | 92301 | Adelanto | -117.4172844 | 34.5395289 | 26.11 | 52.04 | 50-55% | No | 0.065 |
| 6073015000 | 6193 | San Diego | 91942 | La Mesa | -117.0092136 | 32.784615 | 26.05 | 52.02 | 50-55% | No | 0.044 |
| 6113010501 | 5922 | Yolo | 95616 | Davis | -121.7849011 | 38.5369569 | 26.05 | 52.01 | 50-55% | No | 0.044 |
| 6037920038 | 4430 | Los Angeles | 91387 | Canyon Country | -118.4469672 | 34.4236629 | 26.05 | 52.00 | 50-55% | No | 0.062 |
| 6013336201 | 4032 | Contra Costa | 94520 | Concord | -122.0474489 | 37.9606497 | 26.05 | 51.99 | 50-55% | No | 0.038 |
| 6053001400 | 2680 | Monterey | 93901 | Salinas | -121.6639509 | 36.6706218 | 26.05 | 51.97 | 50-55% | No | 0.033 |
| 6037930200 | 546 | Los Angeles | 91342 | Sylmar | -118.2894308 | 34.3387926 | 26.04 | 51.96 | 50-55% | No | 0.055 |
| 6055200804 | 5566 | Napa | 94558 | Napa | -122.3074339 | 38.2946539 | 26.04 | 51.95 | 50-55% | No | 0.035 |
| 6073018700 | 37452 | San Diego | 92055 | Camp Pendleton | -117.4205567 | 33.3510594 | 26.04 | 51.94 | 50-55% | No | 0.046 |
| 6111001301 | 7724 | Ventura | 93004 | Ventura | -119.1565313 | 34.2788511 | 26.03 | 51.92 | 50-55% | No | 0.044 |
| 6037128500 | 4015 | Los Angeles | 91401 | Van Nuys | -118.4443439 | 34.1703043 | 26.03 | 51.91 | 50-55% | No | 0.053 |
| 6085503504 | 6463 | Santa Clara | 95122 | San Jose | -121.8341637 | 37.3358272 | 26.02 | 51.90 | 50-55% | No | 0.038 |
| 6025011803 | 5937 | Imperial | 92243 | El Centro | -115.5662375 | 32.762851 | 26.01 | 51.89 | 50-55% | No | 0.055 |
| 6107002006 | 4378 | Tulare | 93277 | Visalia | -119.3866306 | 36.3125416 | 26.01 | 51.87 | 50-55% | No | 0.060 |
| 6037900805 | 5089 | Los Angeles | 93534 | Lancaster | -118.1577319 | 34.6953144 | 26.01 | 51.86 | 50-55% | No | 0.062 |
| 6037404000 | 4474 | Los Angeles | 91702 | Azusa | -117.8861621 | 34.1141404 | 26.01 | 51.85 | 50-55% | No | 0.055 |
| 6073002711 | 3200 | San Diego | 92105 | San Diego | -117.0715691 | 32.7392175 | 26.00 | 51.84 | 50-55% | No | 0.042 |
| 6037181300 | 3629 | Los Angeles | 90041 | Los Angeles | -118.2236529 | 34.1360845 | 26.00 | 51.82 | 50-55% | No | 0.050 |
| 6037111301 | 7087 | Los Angeles | 91344 | Granada Hills | -118.5157706 | 34.261129 | 25.98 | 51.81 | 50-55% | No | 0.060 |
| 6111000500 | 1867 | Ventura | 93066 | Somis | -119.0558409 | 34.3332732 | 25.98 | 51.80 | 50-55% | No | 0.048 |
| 6101051100 | 2551 | Sutter | 95659 | Nicolaus | -121.5333668 | 38.854825 | 25.98 | 51.78 | 50-55% | No | 0.051 |
| 6037111205 | 3375 | Los Angeles | 91325 | Northridge | -118.5352005 | 34.2540547 | 25.97 | 51.77 | 50-55% | No | 0.060 |
| 6037217001 | 2654 | Los Angeles | 90035 | Los Angeles | -118.38703 | 34.0523836 | 25.97 | 51.76 | 50-55% | No | 0.048 |
| 6001441700 | 7436 | Alameda | 94536 | Fremont | -122.0116314 | 37.5532064 | 25.97 | 51.75 | 50-55% | No | 0.035 |
| 6037406000 | 5059 | Los Angeles | 91722 | Covina | -117.9014269 | 34.0922319 | 25.96 | 51.73 | 50-55% | No | 0.055 |
| 6059088302 | 6029 | Orange | 92840 | Garden Grove | -117.9397292 | 33.7874758 | 25.95 | 51.72 | 50-55% | No | 0.046 |
| 6037406300 | 5532 | Los Angeles | 91791 | West Covina | -117.8769856 | 34.0599163 | 25.95 | 51.71 | 50-55% | No | 0.055 |
| 6067009107 | 3213 | Sacramento | 95827 | Sacramento | -121.3408345 | 38.572506 | 25.95 | 51.70 | 50-55% | No | 0.051 |
| 6037554802 | 6165 | Los Angeles | 90701 | Artesia | -118.0806903 | 33.8693945 | 25.95 | 51.68 | 50-55% | No | 0.044 |
| 6095251701 | 3372 | Solano | 94590 | Vallejo | -122.266959 | 38.1165979 | 25.95 | 51.67 | 50-55% | No | 0.035 |
| 6085504601 | 817 | Santa Clara | 94043 | Mountain View | -122.0860401 | 37.4427987 | 25.94 | 51.66 | 50-55% | No | 0.035 |
| 6085505301 | 4424 | Santa Clara | 95051 | Santa Clara | -121.9848087 | 37.3678358 | 25.94 | 51.65 | 50-55% | No | 0.035 |
| 6065045705 | 7522 | Riverside | 92236 | Coachella | -116.1910765 | 33.6669317 | 25.94 | 51.63 | 50-55% | No | 0.062 |
| 6073018516 | 3992 | San Diego | 92056 | Oceanside | -117.2981757 | 33.2001356 | 25.90 | 51.62 | 50-55% | No | 0.042 |
| 6013386000 | 3317 | Contra Costa | 94530 | El Cerrito | -122.3155835 | 37.9226169 | 25.90 | 51.61 | 50-55% | No | 0.030 |
| 6037137501 | 4124 | Los Angeles | 91364 | Woodland Hills | -118.5767994 | 34.1649322 | 25.89 | 51.60 | 50-55% | No | 0.057 |
| 6037195400 | 4395 | Los Angeles | 90026 | Los Angeles | -118.2740532 | 34.0916921 | 25.89 | 51.58 | 50-55% | No | 0.048 |
| 6001408500 | 4972 | Alameda | 94621 | Oakland | -122.1785112 | 37.7604176 | 25.89 | 51.57 | 50-55% | No | 0.030 |
| 6065040613 | 12842 | Riverside | 92880 | Corona | -117.575648 | 33.9635863 | 25.88 | 51.56 | 50-55% | No | 0.062 |
| 6001406601 | 4596 | Alameda | 94602 | Oakland | -122.2079568 | 37.7936085 | 25.88 | 51.54 | 50-55% | No | 0.030 |
| 6037481714 | 2551 | Los Angeles | 91754 | Monterey Park | -118.1283526 | 34.0643236 | 25.88 | 51.53 | 50-55% | No | 0.048 |
| 6107003501 | 2861 | Tulare | 93257 | Porterville | -119.0847036 | 36.0906458 | 25.86 | 51.52 | 50-55% | No | 0.065 |
| 6037195500 | 4971 | Los Angeles | 90026 | Los Angeles | -118.2646124 | 34.0881864 | 25.85 | 51.51 | 50-55% | No | 0.046 |
| 6071002033 | 7663 | San Bernardino | 91739 | Rancho Cucamonga | -117.5341378 | 34.1284667 | 25.85 | 51.49 | 50-55% | No | 0.065 |
| 6097150901 | 4904 | Sonoma | 94952 | Petaluma | -122.644126 | 38.2477398 | 25.85 | 51.48 | 50-55% | No | 0.033 |
| 6037463200 | 3403 | Los Angeles | 91107 | Pasadena | -118.0894888 | 34.1403972 | 25.85 | 51.47 | 50-55% | No | 0.053 |
| 6059099703 | 4979 | Orange | 92683 | Westminster | -117.9850502 | 33.7338098 | 25.84 | 51.46 | 50-55% | No | 0.044 |
| 6097153001 | 6594 | Sonoma | 95401 | Santa Rosa | -122.7367431 | 38.4509389 | 25.84 | 51.44 | 50-55% | No | 0.030 |
| 6085504002 | 5875 | Santa Clara | 95116 | San Jose | -121.8340698 | 37.3547085 | 25.83 | 51.43 | 50-55% | No | 0.038 |
| 6065042619 | 11267 | Riverside | 92571 | Perris | -117.1955551 | 33.836834 | 25.83 | 51.42 | 50-55% | No | 0.065 |
| 6011000300 | 6055 | Colusa | 95987 | Williams | -122.2818535 | 39.1078478 | 25.82 | 51.41 | 50-55% | No | 0.046 |
| 6037301000 | 4841 | Los Angeles | 91206 | Glendale | -118.2309561 | 34.1564802 | 25.82 | 51.39 | 50-55% | No | 0.051 |
| 6013313103 | 7723 | Contra Costa | 94565 | Pittsburg | -121.875401 | 37.9809405 | 25.81 | 51.38 | 50-55% | No | 0.038 |
| 6037403401 | 5038 | Los Angeles | 91792 | West Covina | -117.8649253 | 34.0082843 | 25.79 | 51.37 | 50-55% | No | 0.053 |
| 6067008135 | 4000 | Sacramento | 95621 | Citrus Heights | -121.3078066 | 38.6826224 | 25.78 | 51.36 | 50-55% | No | 0.053 |
| 6037267502 | 3243 | Los Angeles | 90025 | Los Angeles | -118.4621616 | 34.0375502 | 25.78 | 51.34 | 50-55% | No | 0.046 |
| 6059075816 | 3709 | Orange | 92869 | Orange | -117.8185009 | 33.7920455 | 25.78 | 51.33 | 50-55% | No | 0.048 |
| 6037403402 | 3322 | Los Angeles | 91789 | Walnut | -117.8559096 | 34.0180144 | 25.77 | 51.32 | 50-55% | No | 0.053 |
| 6065046402 | 4684 | Riverside | 92530 | Lake Elsinore | -117.358069 | 33.6478677 | 25.77 | 51.31 | 50-55% | No | 0.057 |
| 6059099234 | 3466 | Orange | 92708 | Fountain Valley | -117.9673986 | 33.7086418 | 25.76 | 51.29 | 50-55% | No | 0.044 |
| 6029005600 | 2253 | Kern | 93516 | Boron | -117.6746581 | 35.0215717 | 25.76 | 51.28 | 50-55% | No | 0.062 |
| 6067003102 | 2933 | Sacramento | 95820 | Sacramento | -121.4359084 | 38.5287219 | 25.76 | 51.27 | 50-55% | No | 0.048 |
| 6073012003 | 3351 | San Diego | 91950 | National City | -117.0744466 | 32.6801039 | 25.75 | 51.25 | 50-55% | No | 0.040 |
| 6115040800 | 4233 | Yuba | 95692 | Wheatland | -121.4340275 | 39.0409023 | 25.75 | 51.24 | 50-55% | No | 0.051 |
| 6085512100 | 1666 | Santa Clara | 95037 | Morgan Hill | -121.7271954 | 37.1799857 | 25.75 | 51.23 | 50-55% | No | 0.040 |
| 6013356001 | 3759 | Contra Costa | 94553 | Martinez | -122.22759 | 38.0244532 | 25.74 | 51.22 | 50-55% | No | 0.033 |
| 6103000100 | 4699 | Tehama | 96080 | Red Bluff | -121.8564922 | 40.1943009 | 25.73 | 51.20 | 50-55% | No | 0.051 |
| 6059110401 | 4953 | Orange | 90620 | Buena Park | -117.9934179 | 33.8529079 | 25.72 | 51.19 | 50-55% | No | 0.046 |
| 6089012701 | 4392 | Shasta | 96013 | Burney | -121.634608 | 40.8724027 | 25.72 | 51.18 | 50-55% | No | 0.048 |
| 6073010112 | 4764 | San Diego | 92154 | San Diego | -117.0804032 | 32.5689086 | 25.72 | 51.17 | 50-55% | No | 0.038 |
| 6107001800 | 4689 | Tulare | 93277 | Visalia | -119.3047728 | 36.3198504 | 25.71 | 51.15 | 50-55% | No | 0.060 |
| 6077004204 | 3006 | San Joaquin | 95240 | Lodi | -121.2806809 | 38.1348549 | 25.70 | 51.14 | 50-55% | No | 0.048 |
| 6033000802 | 4234 | Lake | 95422 | Clearlake | -122.6403151 | 38.9565553 | 25.69 | 51.13 | 50-55% | No | 0.040 |
| 6059099250 | 3062 | Orange | 92708 | Fountain Valley | -117.958692 | 33.7088681 | 25.69 | 51.12 | 50-55% | No | 0.044 |
| 6097152100 | 3004 | Sonoma | 95403 | Santa Rosa | -122.7228509 | 38.4592263 | 25.69 | 51.10 | 50-55% | No | 0.030 |
| 6065044300 | 4774 | Riverside | 92220 | Banning | -116.872378 | 33.919657 | 25.68 | 51.09 | 50-55% | No | 0.068 |
| 6037650602 | 7161 | Los Angeles | 90503 | Torrance | -118.359604 | 33.8423054 | 25.67 | 51.08 | 50-55% | No | 0.044 |
| 6065042412 | 5129 | Riverside | 92557 | Moreno Valley | -117.2208865 | 33.984326 | 25.67 | 51.07 | 50-55% | No | 0.068 |
| 6075012202 | 2986 | San Francisco | 94109 | San Francisco | -122.4196438 | 37.7854142 | 25.67 | 51.05 | 50-55% | No | 0.030 |
| 6067007416 | 3866 | Sacramento | 95842 | Sacramento | -121.3538791 | 38.6811015 | 25.65 | 51.04 | 50-55% | No | 0.051 |
| 6073010104 | 3217 | San Diego | 92154 | San Diego | -117.0970321 | 32.5673601 | 25.65 | 51.03 | 50-55% | No | 0.038 |
| 6073016804 | 7292 | San Diego | 92040 | Lakeside | -116.9141796 | 32.8654251 | 25.65 | 51.02 | 50-55% | No | 0.046 |
| 6065041910 | 6342 | Riverside | 92883 | Corona | -117.4949771 | 33.7892199 | 25.64 | 51.00 | 50-55% | No | 0.060 |
| 6067007019 | 1203 | Sacramento | 95834 | Sacramento | -121.4946981 | 38.6450907 | 25.64 | 50.99 | 50-55% | No | 0.048 |
| 6067003502 | 2916 | Sacramento | 95822 | Sacramento | -121.4885738 | 38.5245176 | 25.64 | 50.98 | 50-55% | No | 0.048 |
| 6103000600 | 5213 | Tehama | 96080 | Red Bluff | -122.2068646 | 40.1913614 | 25.64 | 50.96 | 50-55% | No | 0.050 |
| 6013336102 | 7595 | Contra Costa | 94520 | Concord | -122.039845 | 37.965937 | 25.64 | 50.95 | 50-55% | No | 0.038 |
| 6075010700 | 5592 | San Francisco | 94133 | San Francisco | -122.4100466 | 37.798514 | 25.63 | 50.94 | 50-55% | No | 0.030 |
| 6059088301 | 6430 | Orange | 92840 | Garden Grove | -117.9469297 | 33.7961504 | 25.62 | 50.93 | 50-55% | No | 0.046 |
| 6069000501 | 5395 | San Benito | 95023 | Hollister | -121.379325 | 36.8433246 | 25.60 | 50.91 | 50-55% | No | 0.040 |
| 6111001502 | 8668 | Ventura | 93003 | Ventura | -119.2209072 | 34.2631822 | 25.59 | 50.90 | 50-55% | No | 0.044 |
| 6071012200 | 6076 | San Bernardino | 91710 | Chino | -117.6701483 | 33.9825562 | 25.59 | 50.89 | 50-55% | No | 0.060 |
| 6097153005 | 6669 | Sonoma | 95401 | Santa Rosa | -122.8012431 | 38.4334565 | 25.58 | 50.88 | 50-55% | No | 0.030 |
| 6073020108 | 5813 | San Diego | 92026 | Escondido | -117.0867921 | 33.137136 | 25.57 | 50.86 | 50-55% | No | 0.048 |
| 6059075301 | 5712 | Orange | 92706 | Santa Ana | -117.8825621 | 33.7749556 | 25.56 | 50.85 | 50-55% | No | 0.046 |
| 6067007012 | 3345 | Sacramento | 95833 | Sacramento | -121.5016424 | 38.6203564 | 25.54 | 50.84 | 50-55% | No | 0.048 |
| 6073014805 | 4328 | San Diego | 91942 | La Mesa | -117.0386117 | 32.7765263 | 25.53 | 50.83 | 50-55% | No | 0.044 |
| 6085501900 | 4641 | Santa Clara | 95126 | San Jose | -121.9087747 | 37.3191212 | 25.53 | 50.81 | 50-55% | No | 0.038 |
| 6081601400 | 6658 | San Mateo | 94015 | Daly City | -122.4788188 | 37.6810704 | 25.52 | 50.80 | 50-55% | No | 0.030 |
| 6085503713 | 2974 | Santa Clara | 95116 | San Jose | -121.8410727 | 37.3647065 | 25.51 | 50.79 | 50-55% | No | 0.038 |
| 6077003209 | 3540 | San Joaquin | 95209 | Stockton | -121.3284665 | 38.0358618 | 25.49 | 50.78 | 50-55% | No | 0.046 |
| 6067007018 | 5083 | Sacramento | 95834 | Sacramento | -121.5172959 | 38.6442309 | 25.49 | 50.76 | 50-55% | No | 0.048 |
| 6059075807 | 4324 | Orange | 92869 | Orange | -117.8202433 | 33.7841408 | 25.48 | 50.75 | 50-55% | No | 0.048 |
| 6001428100 | 4651 | Alameda | 94501 | Alameda | -122.2346068 | 37.7589136 | 25.47 | 50.74 | 50-55% | No | 0.030 |
| 6071000105 | 6676 | San Bernardino | 91709 | Chino Hills | -117.7390315 | 33.9934968 | 25.45 | 50.73 | 50-55% | No | 0.057 |
| 6073018903 | 4861 | San Diego | 92028 | Fallbrook | -117.2419463 | 33.3971392 | 25.44 | 50.71 | 50-55% | No | 0.051 |
| 6095253101 | 4974 | Solano | 95688 | Vacaville | -122.0063092 | 38.3505074 | 25.44 | 50.70 | 50-55% | No | 0.042 |
| 6059110014 | 4905 | Orange | 90720 | Los Alamitos | -118.0632084 | 33.8013108 | 25.44 | 50.69 | 50-55% | No | 0.044 |
| 6059062647 | 4123 | Orange | 92637 | Laguna Woods | -117.7074697 | 33.6045946 | 25.44 | 50.67 | 50-55% | No | 0.050 |
| 6001405600 | 3137 | Alameda | 94610 | Oakland | -122.2372726 | 37.8008019 | 25.43 | 50.66 | 50-55% | No | 0.030 |
| 6067009634 | 4913 | Sacramento | 95823 | Sacramento | -121.4409188 | 38.4697876 | 25.43 | 50.65 | 50-55% | No | 0.048 |
| 6059088105 | 4133 | Orange | 92841 | Garden Grove | -117.97572 | 33.7848346 | 25.43 | 50.64 | 50-55% | No | 0.046 |
| 6001425103 | 2502 | Alameda | 94608 | Emeryville | -122.2898443 | 37.8426202 | 25.42 | 50.62 | 50-55% | No | 0.030 |
| 6071008200 | 5147 | San Bernardino | 92373 | Redlands | -117.1781239 | 34.0470815 | 25.40 | 50.61 | 50-55% | No | 0.068 |
| 6001430500 | 6049 | Alameda | 94578 | San Leandro | -122.1091519 | 37.704911 | 25.39 | 50.60 | 50-55% | No | 0.033 |
| 6083003001 | 5547 | Santa Barbara | 93111 | Santa Barbara | -119.8192482 | 34.4311812 | 25.38 | 50.59 | 50-55% | No | 0.040 |
| 6067009501 | 2772 | Sacramento | 95632 | Galt | -121.3716467 | 38.2769169 | 25.38 | 50.57 | 50-55% | No | 0.046 |
| 6037670100 | 6659 | Los Angeles | 90717 | Lomita | -118.3159751 | 33.7847676 | 25.37 | 50.56 | 50-55% | No | 0.042 |
| 6037300400 | 5740 | Los Angeles | 91214 | La Crescenta | -118.2563984 | 34.2284593 | 25.37 | 50.55 | 50-55% | No | 0.053 |
| 6037920035 | 7720 | Los Angeles | 91351 | Canyon Country | -118.4640472 | 34.4193105 | 25.36 | 50.54 | 50-55% | No | 0.062 |
| 6037502005 | 4251 | Los Angeles | 90605 | Whittier | -118.0342818 | 33.9516825 | 25.36 | 50.52 | 50-55% | No | 0.046 |
| 6037462100 | 5259 | Los Angeles | 91104 | Pasadena | -118.1369963 | 34.1634006 | 25.35 | 50.51 | 50-55% | No | 0.051 |
| 6001430900 | 4681 | Alameda | 94546 | Castro Valley | -122.0828322 | 37.6982784 | 25.35 | 50.50 | 50-55% | No | 0.033 |
| 6037554516 | 3902 | Los Angeles | 90703 | Cerritos | -118.0672796 | 33.8553144 | 25.35 | 50.49 | 50-55% | No | 0.044 |
| 6059063808 | 6393 | Orange | 92627 | Costa Mesa | -117.9255731 | 33.6552399 | 25.35 | 50.47 | 50-55% | No | 0.044 |
| 6037670001 | 3311 | Los Angeles | 90717 | Lomita | -118.3166168 | 33.803864 | 25.35 | 50.46 | 50-55% | No | 0.042 |
| 6037301205 | 2209 | Los Angeles | 91202 | Glendale | -118.2729275 | 34.1684098 | 25.34 | 50.45 | 50-55% | No | 0.053 |
| 6037480102 | 4303 | Los Angeles | 91775 | San Gabriel | -118.0849636 | 34.1081896 | 25.33 | 50.44 | 50-55% | No | 0.051 |
| 6081610601 | 6257 | San Mateo | 94063 | Redwood City | -122.2090707 | 37.4713247 | 25.33 | 50.42 | 50-55% | No | 0.033 |
| 6005000301 | 5871 | Amador | 95669 | Plymouth | -120.9500222 | 38.457356 | 25.31 | 50.41 | 50-55% | No | 0.053 |
| 6037271802 | 5911 | Los Angeles | 90034 | Los Angeles | -118.4124738 | 34.0198929 | 25.30 | 50.40 | 50-55% | No | 0.046 |
| 6113011102 | 4884 | Yolo | 95776 | Woodland | -121.7608872 | 38.6701375 | 25.30 | 50.38 | 50-55% | No | 0.046 |
| 6037900605 | 7100 | Los Angeles | 93535 | Lancaster | -118.0856717 | 34.7045061 | 25.27 | 50.37 | 50-55% | No | 0.062 |
| 6067003400 | 4085 | Sacramento | 95831 | Sacramento | -121.5088949 | 38.5121908 | 25.26 | 50.36 | 50-55% | No | 0.048 |
| 6111004200 | 5324 | Ventura | 93041 | Port Hueneme | -119.1908963 | 34.1622199 | 25.26 | 50.35 | 50-55% | No | 0.044 |
| 6065043279 | 5093 | Riverside | 92584 | Menifee | -117.2176633 | 33.6278615 | 25.22 | 50.33 | 50-55% | No | 0.057 |
| 6037408704 | 3155 | Los Angeles | 91748 | Rowland Heights | -117.8934924 | 33.98233 | 25.22 | 50.32 | 50-55% | No | 0.050 |
| 6037183221 | 3118 | Los Angeles | 90042 | Los Angeles | -118.1909386 | 34.1254321 | 25.20 | 50.31 | 50-55% | No | 0.050 |
| 6037481101 | 3814 | Los Angeles | 91776 | San Gabriel | -118.1069461 | 34.099157 | 25.19 | 50.30 | 50-55% | No | 0.051 |
| 6037181600 | 4352 | Los Angeles | 90041 | Los Angeles | -118.2097406 | 34.1297234 | 25.18 | 50.28 | 50-55% | No | 0.050 |
| 6037189800 | 4021 | Los Angeles | 90046 | Los Angeles | -118.3590366 | 34.0982925 | 25.17 | 50.27 | 50-55% | No | 0.050 |
| 6073000700 | 3754 | San Diego | 92103 | San Diego | -117.1513148 | 32.7447633 | 25.17 | 50.26 | 50-55% | No | 0.040 |
| 6065031001 | 5622 | Riverside | 92504 | Riverside | -117.4098503 | 33.9516686 | 25.16 | 50.25 | 50-55% | No | 0.065 |
| 6059075901 | 4126 | Orange | 92866 | Orange | -117.8531049 | 33.7914977 | 25.15 | 50.23 | 50-55% | No | 0.048 |
| 6013321200 | 5533 | Contra Costa | 94553 | Martinez | -122.0713084 | 37.9821516 | 25.15 | 50.22 | 50-55% | No | 0.038 |
| 6111001503 | 5898 | Ventura | 93003 | Ventura | -119.2022525 | 34.268934 | 25.14 | 50.21 | 50-55% | No | 0.044 |
| 6013303205 | 8309 | Contra Costa | 94513 | Brentwood | -121.7021082 | 37.9109334 | 25.14 | 50.20 | 50-55% | No | 0.042 |
| 6095253107 | 6016 | Solano | 95687 | Vacaville | -121.9790495 | 38.3420876 | 25.13 | 50.18 | 50-55% | No | 0.042 |
| 6001428400 | 4357 | Alameda | 94501 | Alameda | -122.2563814 | 37.756593 | 25.13 | 50.17 | 50-55% | No | 0.030 |
| 6037267200 | 5927 | Los Angeles | 90025 | Los Angeles | -118.4372057 | 34.0456465 | 25.12 | 50.16 | 50-55% | No | 0.046 |
| 6037431502 | 4361 | Los Angeles | 91006 | Arcadia | -118.0204 | 34.1024524 | 25.11 | 50.15 | 50-55% | No | 0.051 |
| 6073000300 | 4732 | San Diego | 92103 | San Diego | -117.1622682 | 32.7447803 | 25.10 | 50.13 | 50-55% | No | 0.040 |
| 6037910502 | 4086 | Los Angeles | 93550 | Palmdale | -118.1008047 | 34.5800249 | 25.10 | 50.12 | 50-55% | No | 0.062 |
| 6073013409 | 5380 | San Diego | 91910 | Chula Vista | -117.0358624 | 32.6331941 | 25.10 | 50.11 | 50-55% | No | 0.040 |
| 6053011102 | 11454 | Monterey | 93960 | Soledad | -121.2981067 | 36.4618772 | 25.09 | 50.09 | 50-55% | No | 0.044 |
| 6071008301 | 6340 | San Bernardino | 92373 | Redlands | -117.2026161 | 34.0421853 | 25.09 | 50.08 | 50-55% | No | 0.068 |
| 6073020211 | 6702 | San Diego | 92027 | Escondido | -117.0640169 | 33.1335333 | 25.09 | 50.07 | 50-55% | No | 0.048 |
| 6111006000 | 4845 | Ventura | 91320 | Newbury Park | -118.9441062 | 34.1863938 | 25.08 | 50.06 | 50-55% | No | 0.048 |
| 6075025100 | 3077 | San Francisco | 94110 | San Francisco | -122.4076735 | 37.7439369 | 25.07 | 50.04 | 50-55% | No | 0.030 |
| 6059110605 | 6638 | Orange | 92833 | Fullerton | -117.9712501 | 33.884898 | 25.07 | 50.03 | 50-55% | No | 0.046 |
| 6037461902 | 1654 | Los Angeles | 91103 | Pasadena | -118.1481178 | 34.1487579 | 25.07 | 50.02 | 50-55% | No | 0.051 |
| 6053000104 | 3478 | Monterey | 93906 | Salinas | -121.6212411 | 36.7123618 | 25.06 | 50.01 | 50-55% | No | 0.033 |
| 6059001101 | 4523 | Orange | 90631 | La Habra | -117.963138 | 33.9427646 | 25.04 | 49.99 | 45-50% | No | 0.046 |
| 6083001000 | 6270 | Santa Barbara | 93101 | Santa Barbara | -119.7051133 | 34.4181213 | 25.04 | 49.98 | 45-50% | No | 0.040 |
| 6019004208 | 7124 | Fresno | 93722 | Fresno | -119.8789303 | 36.8502988 | 25.03 | 49.97 | 45-50% | No | 0.060 |
| 6037572001 | 5278 | Los Angeles | 90807 | Long Beach | -118.1762684 | 33.8227205 | 25.03 | 49.96 | 45-50% | No | 0.042 |
| 6029003811 | 2661 | Kern | 93312 | Bakersfield | -119.1189923 | 35.3762031 | 25.02 | 49.94 | 45-50% | No | 0.062 |
| 6037195201 | 2834 | Los Angeles | 90027 | Los Angeles | -118.2785167 | 34.1087422 | 25.01 | 49.93 | 45-50% | No | 0.050 |
| 6095252707 | 4753 | Solano | 94533 | Fairfield | -122.0011752 | 38.2600765 | 25.01 | 49.92 | 45-50% | No | 0.040 |
| 6103000300 | 4515 | Tehama | 96080 | Red Bluff | -122.6497624 | 40.0579918 | 25.00 | 49.91 | 45-50% | No | 0.048 |
| 6083002706 | 6054 | Santa Barbara | 93436 | Lompoc | -120.4487233 | 34.6507195 | 25.00 | 49.89 | 45-50% | No | 0.038 |

| | | | | | | | | | | |
|---|---|---|---|---|---|---|---|---|---|---|
| 6037651102 | 3639 | Los Angeles | 90505 | Torrance | -118.3460738 | 33.8209421 | 24.98 | 49.88 | 45-50% | No |
| 6065041812 | 3319 | Riverside | 92879 | Corona | -117.5634459 | 33.861606 | 24.98 | 49.87 | 45-50% | No |
| 6067009109 | 4842 | Sacramento | 95826 | Sacramento | -121.3606353 | 38.5555504 | 24.97 | 49.85 | 45-50% | No |
| 6065040814 | 4782 | Riverside | 92879 | Corona | -117.5175804 | 33.8973552 | 24.97 | 49.84 | 45-50% | No |
| 6037401601 | 5034 | Los Angeles | 91750 | La Verne | -117.7643631 | 34.1170701 | 24.97 | 49.83 | 45-50% | No |
| 6067009610 | 6072 | Sacramento | 95823 | Sacramento | -121.4375735 | 38.4555299 | 24.97 | 49.82 | 45-50% | No |
| 6001403501 | 4374 | Alameda | 94611 | Oakland | -122.2600769 | 37.8177294 | 24.96 | 49.80 | 45-50% | No |
| 6081606000 | 4959 | San Mateo | 94401 | San Mateo | -122.3311046 | 37.5797295 | 24.95 | 49.79 | 45-50% | No |
| 6059099902 | 4486 | Orange | 92683 | Westminster | -118.0205108 | 33.7662506 | 24.95 | 49.78 | 45-50% | No |
| 6037310201 | 5466 | Los Angeles | 91501 | Burbank | -118.3045921 | 34.1922052 | 24.94 | 49.77 | 45-50% | No |
| 6001441926 | 4080 | Alameda | 94538 | Fremont | -121.9787103 | 37.5408003 | 24.93 | 49.75 | 45-50% | No |
| 6037128702 | 5639 | Los Angeles | 91423 | Sherman Oaks | -118.439318 | 34.160869 | 24.92 | 49.74 | 45-50% | No |
| 6037461300 | 6638 | Los Angeles | 91104 | Pasadena | -118.111733 | 34.1740052 | 24.91 | 49.73 | 45-50% | No |
| 6111008201 | 4315 | Ventura | 93063 | Simi Valley | -118.7043688 | 34.2762804 | 24.91 | 49.72 | 45-50% | No |
| 6085512509 | 4111 | Santa Clara | 95020 | Gilroy | -121.5713496 | 36.9878533 | 24.91 | 49.70 | 45-50% | No |
| 6085506402 | 5733 | Santa Clara | 95128 | San Jose | -121.9450314 | 37.301578 | 24.91 | 49.69 | 45-50% | No |
| 6067005508 | 3106 | Sacramento | 95825 | Sacramento | -121.4084122 | 38.577969 | 24.91 | 49.68 | 45-50% | No |
| 6073003004 | 4940 | San Diego | 92114 | San Diego | -117.0607339 | 32.7130823 | 24.90 | 49.67 | 45-50% | No |
| 6071000109 | 6752 | San Bernardino | 91709 | Chino Hills | -117.723592 | 33.9733621 | 24.90 | 49.65 | 45-50% | No |
| 6053014201 | 5133 | Monterey | 93933 | Marina | -121.7937321 | 36.6765137 | 24.88 | 49.64 | 45-50% | No |
| 6037400604 | 2980 | Los Angeles | 91702 | Azusa | -117.8943529 | 34.1521342 | 24.87 | 49.63 | 45-50% | No |
| 6037408212 | 4485 | Los Angeles | 91748 | Rowland Heights | -117.8795412 | 33.9944207 | 24.86 | 49.62 | 45-50% | No |
| 6073013302 | 4933 | San Diego | 91911 | Chula Vista | -117.048661 | 32.6155251 | 24.85 | 49.60 | 45-50% | No |
| 6013303201 | 9989 | Contra Costa | 94531 | Antioch | -121.7586352 | 37.9431268 | 24.84 | 49.59 | 45-50% | No |
| 6085504317 | 4429 | Santa Clara | 95131 | San Jose | -121.8767483 | 37.3828815 | 24.84 | 49.58 | 45-50% | No |
| 6065042726 | 5357 | Riverside | 92585 | Sun City | -117.1237892 | 33.7143137 | 24.84 | 49.56 | 45-50% | No |
| 6065043270 | 4991 | Riverside | 92595 | Wildomar | -117.2589261 | 33.6015412 | 24.83 | 49.55 | 45-50% | No |
| 6067003900 | 3374 | Sacramento | 95822 | Sacramento | -121.5186401 | 38.5303294 | 24.83 | 49.54 | 45-50% | No |
| 6037503302 | 6271 | Los Angeles | 90604 | Whittier | -118.0213686 | 33.9416417 | 24.81 | 49.53 | 45-50% | No |
| 6085512038 | 2847 | Santa Clara | 95138 | San Jose | -121.7620634 | 37.234934 | 24.81 | 49.51 | 45-50% | No |
| 6029002821 | 4897 | Kern | 93311 | Bakersfield | -119.1021478 | 35.3162893 | 24.80 | 49.50 | 45-50% | No |
| 6037106645 | 3389 | Los Angeles | 91344 | Granada Hills | -118.4941725 | 34.2905628 | 24.79 | 49.49 | 45-50% | No |
| 6037408136 | 3849 | Los Angeles | 91792 | West Covina | -117.8755476 | 34.0089143 | 24.78 | 49.48 | 45-50% | No |
| 6073018610 | 7635 | San Diego | 92057 | Oceanside | -117.3032478 | 33.2591005 | 24.78 | 49.46 | 45-50% | No |
| 6073018519 | 5891 | San Diego | 92056 | Oceanside | -117.2838101 | 33.1943943 | 24.77 | 49.45 | 45-50% | No |
| 6065044702 | 2295 | Riverside | 92234 | Cathedral City | -116.4872959 | 33.8222736 | 24.77 | 49.44 | 45-50% | No |
| 6111001204 | 2473 | Ventura | 93060 | Santa Paula | -119.2005749 | 34.3589732 | 24.75 | 49.43 | 45-50% | No |
| 6037910504 | 4797 | Los Angeles | 93550 | Palmdale | -118.1046034 | 34.5690669 | 24.74 | 49.41 | 45-50% | No |
| 6037401101 | 5663 | Los Angeles | 91740 | Glendora | -117.8541745 | 34.1234558 | 24.74 | 49.40 | 45-50% | No |
| 6059099224 | 3521 | Orange | 92708 | Fountain Valley | -117.9676275 | 33.72311 | 24.74 | 49.39 | 45-50% | No |
| 6059001501 | 6373 | Orange | 92821 | Brea | -117.9135026 | 33.9340988 | 24.73 | 49.38 | 45-50% | No |
| 6081604400 | 4448 | San Mateo | 94030 | Millbrae | -122.3911489 | 37.6067243 | 24.72 | 49.36 | 45-50% | No |
| 6037119310 | 3871 | Los Angeles | 91402 | Panorama City | -118.4516702 | 34.2450202 | 24.72 | 49.35 | 45-50% | No |
| 6059075303 | 3412 | Orange | 92706 | Santa Ana | -117.8739874 | 33.7661611 | 24.71 | 49.34 | 45-50% | No |
| 6111007100 | 6335 | Ventura | 91362 | Thousand Oaks | -118.8455482 | 34.1750754 | 24.70 | 49.33 | 45-50% | No |
| 6045011500 | 6739 | Mendocino | 95482 | Ukiah | -123.2032659 | 39.1561868 | 24.68 | 49.31 | 45-50% | No |
| 6077003114 | 10129 | San Joaquin | 95219 | Stockton | -121.3566706 | 37.9813779 | 24.66 | 49.30 | 45-50% | No |
| 6073020213 | 4028 | San Diego | 92025 | Escondido | -117.0781738 | 33.1313346 | 24.64 | 49.29 | 45-50% | No |
| 6075016100 | 5366 | San Francisco | 94115 | San Francisco | -122.4286631 | 37.7799831 | 24.64 | 49.27 | 45-50% | No |
| 6037141201 | 3707 | Los Angeles | 91423 | Sherman Oaks | -118.4426826 | 34.1519021 | 24.62 | 49.26 | 45-50% | No |
| 6059052408 | 6154 | Orange | 92630 | Lake Forest | -117.7046343 | 33.649152 | 24.62 | 49.25 | 45-50% | No |
| 6029000902 | 3340 | Kern | 93306 | Bakersfield | -118.9631285 | 35.4050159 | 24.62 | 49.24 | 45-50% | No |
| 6081607701 | 3954 | San Mateo | 94401 | San Mateo | -122.3033477 | 37.5711297 | 24.62 | 49.22 | 45-50% | No |
| 6037403316 | 6783 | Los Angeles | 91765 | Diamond Bar | -117.7984574 | 34.0317834 | 24.61 | 49.21 | 45-50% | No |
| 6029002818 | 3761 | Kern | 93309 | Bakersfield | -119.0852288 | 35.3323458 | 24.61 | 49.20 | 45-50% | No |
| 6001441602 | 6802 | Alameda | 94536 | Fremont | -122.0212345 | 37.55696 | 24.61 | 49.19 | 45-50% | No |
| 6065041911 | 10258 | Riverside | 92883 | Corona | -117.4957943 | 33.7428832 | 24.60 | 49.17 | 45-50% | No |
| 6071002028 | 5282 | San Bernardino | 91730 | Rancho Cucamonga | -117.5827126 | 34.1142002 | 24.60 | 49.16 | 45-50% | No |
| 6037189903 | 2164 | Los Angeles | 90046 | Los Angeles | -118.3477123 | 34.1025152 | 24.60 | 49.15 | 45-50% | No |
| 6071000818 | 5428 | San Bernardino | 91786 | Upland | -117.6607366 | 34.1142472 | 24.60 | 49.14 | 45-50% | No |
| 6037463101 | 2383 | Los Angeles | 91107 | Pasadena | -118.0699478 | 34.1401862 | 24.59 | 49.12 | 45-50% | No |
| 6059075902 | 6548 | Orange | 92866 | Orange | -117.8508355 | 33.7807141 | 24.59 | 49.11 | 45-50% | No |
| 6089010500 | 4928 | Shasta | 96001 | Redding | -122.4026832 | 40.575283 | 24.58 | 49.10 | 45-50% | No |
| 6037297500 | 5163 | Los Angeles | 90731 | San Pedro | -118.3025064 | 33.7107078 | 24.58 | 49.09 | 45-50% | No |
| 6037462800 | 2915 | Los Angeles | 91107 | Pasadena | -118.1012712 | 34.1522193 | 24.58 | 49.07 | 45-50% | No |
| 6109005100 | 8355 | Tuolumne | 95327 | Jamestown | -120.4335241 | 37.9315151 | 24.57 | 49.06 | 45-50% | No |
| 6037214503 | 3325 | Los Angeles | 90036 | Los Angeles | -118.3541156 | 34.0668419 | 24.55 | 49.05 | 45-50% | No |
| 6019005801 | 4856 | Fresno | 93727 | Fresno | -119.6910954 | 36.8011827 | 24.55 | 49.04 | 45-50% | No |
| 6001435602 | 5329 | Alameda | 94541 | Hayward | -122.1069995 | 37.6819278 | 24.55 | 49.02 | 45-50% | No |
| 6037113102 | 2828 | Los Angeles | 91311 | Chatsworth | -118.5686167 | 34.2660306 | 24.54 | 49.01 | 45-50% | No |
| 6059099204 | 4729 | Orange | 92683 | Westminster | -117.9503802 | 33.7377201 | 24.53 | 49.00 | 45-50% | No |
| 6037405600 | 5428 | Los Angeles | 91791 | West Covina | -117.9155583 | 34.0796741 | 24.53 | 48.98 | 45-50% | No |
| 6053011202 | 6868 | Monterey | 93927 | Greenfield | -121.2387759 | 36.3298137 | 24.53 | 48.97 | 45-50% | No |
| 6073014001 | 4630 | San Diego | 91945 | Lemon Grove | -117.023685 | 32.7369483 | 24.52 | 48.96 | 45-50% | No |
| 6001406602 | 2493 | Alameda | 94602 | Oakland | -122.2143073 | 37.7964782 | 24.52 | 48.95 | 45-50% | No |
| 6073013303 | 4909 | San Diego | 91911 | Chula Vista | -117.0502312 | 32.6077631 | 24.52 | 48.93 | 45-50% | No |
| 6059099226 | 3889 | Orange | 92708 | Fountain Valley | -117.9329082 | 33.7235974 | 24.52 | 48.92 | 45-50% | No |
| 6001408300 | 4167 | Alameda | 94605 | Oakland | -122.1645166 | 37.7710979 | 24.52 | 48.91 | 45-50% | No |
| 6073009400 | 5028 | San Diego | 92145 | San Diego | -117.1173287 | 32.8653406 | 24.51 | 48.90 | 45-50% | No |
| 6073002601 | 6148 | San Diego | 92105 | San Diego | -117.0966252 | 32.7449119 | 24.49 | 48.88 | 45-50% | No |
| 6037141202 | 2800 | Los Angeles | 91423 | Sherman Oaks | -118.4423602 | 34.1471798 | 24.47 | 48.87 | 45-50% | No |
| 6037189500 | 4452 | Los Angeles | 90068 | Los Angeles | -118.3212809 | 34.1084106 | 24.46 | 48.86 | 45-50% | No |
| 6037137402 | 5364 | Los Angeles | 91364 | Woodland Hills | -118.6249487 | 34.1554628 | 24.45 | 48.85 | 45-50% | No |
| 6075025701 | 4788 | San Francisco | 94134 | San Francisco | -122.4121411 | 37.7315763 | 24.45 | 48.83 | 45-50% | No |
| 6107001400 | 5581 | Tulare | 93221 | Exeter | -119.1202602 | 36.3259261 | 24.45 | 48.82 | 45-50% | No |
| 6067009611 | 3165 | Sacramento | 95758 | Elk Grove | -121.3988953 | 38.4154629 | 24.44 | 48.81 | 45-50% | No |
| 6037181400 | 4302 | Los Angeles | 90041 | Los Angeles | -118.2088736 | 34.1367194 | 24.44 | 48.80 | 45-50% | No |
| 6067008705 | 4397 | Sacramento | 95742 | Rancho Cordova | -121.2017883 | 38.5777827 | 24.43 | 48.78 | 45-50% | No |
| 6077005502 | 1806 | San Joaquin | 95377 | Tracy | -121.4377118 | 37.6257014 | 24.43 | 48.77 | 45-50% | No |
| 6073020308 | 5743 | San Diego | 92026 | Escondido | -117.0980269 | 33.1374325 | 24.43 | 48.76 | 45-50% | No |
| 6073020403 | 4107 | San Diego | 92025 | Escondido | -117.0804409 | 33.097045 | 24.43 | 48.75 | 45-50% | No |
| 6059063902 | 6670 | Orange | 92626 | Costa Mesa | -117.9136471 | 33.6778627 | 24.42 | 48.73 | 45-50% | No |
| 6067007016 | 5537 | Sacramento | 95834 | Sacramento | -121.5403508 | 38.6360432 | 24.42 | 48.72 | 45-50% | No |
| 6023001300 | 1479 | Humboldt | 95521 | Arcata | -124.1597819 | 40.8522054 | 24.41 | 48.71 | 45-50% | No |
| 6109004100 | 5358 | Tuolumne | 95370 | Sonora | -120.3277066 | 37.9231742 | 24.40 | 48.69 | 45-50% | No |
| 6037600703 | 1914 | Los Angeles | 90305 | Inglewood | -118.3365577 | 33.9584128 | 24.40 | 48.68 | 45-50% | No |
| 6103000400 | 5508 | Tehama | 96080 | Red Bluff | -122.338894 | 40.2367374 | 24.40 | 48.67 | 45-50% | No |
| 6073002801 | 3068 | San Diego | 92115 | San Diego | -117.0837903 | 32.7755353 | 24.39 | 48.66 | 45-50% | No |
| 6099003907 | 7460 | Stanislaus | 95382 | Turlock | -120.8343873 | 37.5147982 | 24.39 | 48.64 | 45-50% | No |
| 6073001600 | 5651 | San Diego | 92104 | San Diego | -117.1213219 | 32.7521609 | 24.39 | 48.63 | 45-50% | No |
| 6065041805 | 5799 | Riverside | 92882 | Corona | -117.5910428 | 33.8648895 | 24.39 | 48.62 | 45-50% | No |
| 6037920313 | 6010 | Los Angeles | 91321 | Newhall | -118.5513173 | 34.3715599 | 24.39 | 48.61 | 45-50% | No |
| 6067004001 | 5755 | Sacramento | 95831 | Sacramento | -121.511658 | 38.4996777 | 24.38 | 48.59 | 45-50% | No |
| 6007003200 | 4234 | Butte | 95966 | Oroville | -121.5309393 | 39.429744 | 24.38 | 48.58 | 45-50% | No |
| 6037621204 | 3230 | Los Angeles | 90277 | Redondo Beach | -118.3979526 | 33.8464727 | 24.37 | 48.57 | 45-50% | No |
| 6029003306 | 4897 | Kern | 93225 | Frazier Park | -119.1500356 | 34.9235317 | 24.36 | 48.56 | 45-50% | No |
| 6111004710 | 5089 | Ventura | 93033 | Oxnard | -119.1565272 | 34.1642972 | 24.36 | 48.54 | 45-50% | No |
| 6037139001 | 4767 | Los Angeles | 91316 | Encino | -118.511718 | 34.1754113 | 24.35 | 48.53 | 45-50% | No |
| 6001423300 | 3647 | Alameda | 94702 | Berkeley | -122.2842021 | 37.8573287 | 24.35 | 48.52 | 45-50% | No |
| 6085504803 | 5756 | Santa Clara | 94089 | Sunnyvale | -122.01954 | 37.4010794 | 24.34 | 48.51 | 45-50% | No |
| 6065044403 | 4402 | Riverside | 92561 | Mountain Center | -116.4728576 | 33.4680494 | 24.30 | 48.49 | 45-50% | No |
| 6073010502 | 5514 | San Diego | 91932 | Imperial Beach | -117.1129542 | 32.5860463 | 24.30 | 48.48 | 45-50% | No |
| 6037800327 | 5305 | Los Angeles | 91301 | Agoura Hills | -118.7424224 | 34.1602091 | 24.30 | 48.47 | 45-50% | No |
| 6095250400 | 3087 | Solano | 94591 | Vallejo | -122.2239275 | 38.0949074 | 24.29 | 48.46 | 45-50% | No |
| 6059076201 | 6772 | Orange | 92865 | Orange | -117.8536692 | 33.8366335 | 24.28 | 48.44 | 45-50% | No |
| 6067009314 | 5922 | Sacramento | 95624 | Elk Grove | -121.3624683 | 38.4380815 | 24.28 | 48.43 | 45-50% | No |
| 6013355107 | 5048 | Contra Costa | 94513 | Brentwood | -121.857135 | 37.9316982 | 24.28 | 48.42 | 45-50% | No |
| 6071010019 | 5235 | San Bernardino | 92345 | Hesperia | -117.3172327 | 34.4044566 | 24.28 | 48.40 | 45-50% | No |
| 6037702201 | 4483 | Los Angeles | 90405 | Santa Monica | -118.4729854 | 34.0133521 | 24.27 | 48.39 | 45-50% | No |
| 6037900704 | 3050 | Los Angeles | 93534 | Lancaster | -118.1346836 | 34.6528656 | 24.27 | 48.38 | 45-50% | No |
| 6037113303 | 4006 | Los Angeles | 91311 | Chatsworth | -118.5790731 | 34.2440789 | 24.27 | 48.37 | 45-50% | No |
| 6037124000 | 4550 | Los Angeles | 91607 | Valley Village | -118.4045529 | 34.1619336 | 24.27 | 48.35 | 45-50% | No |
| 6085504506 | 5924 | Santa Clara | 95035 | Milpitas | -121.9161877 | 37.4503035 | 24.26 | 48.34 | 45-50% | No |
| 6037143602 | 4260 | Los Angeles | 91604 | Studio City | -118.3855058 | 34.1450296 | 24.25 | 48.33 | 45-50% | No |
| 6059032022 | 6833 | Orange | 92692 | Mission Viejo | -117.6666493 | 33.55068 | 24.25 | 48.32 | 45-50% | No |
| 6067005903 | 2277 | Sacramento | 95608 | Carmichael | -121.3506355 | 38.6137442 | 24.25 | 48.30 | 45-50% | No |
| 6111008302 | 5380 | Ventura | 93063 | Simi Valley | -118.6739309 | 34.2747162 | 24.24 | 48.29 | 45-50% | No |
| 6013359102 | 5159 | Contra Costa | 94564 | Pinole | -122.3071592 | 38.0033732 | 24.24 | 48.28 | 45-50% | No |
| 6071008500 | 8316 | San Bernardino | 92373 | Redlands | -117.136567 | 34.0183198 | 24.24 | 48.27 | 45-50% | No |
| 6037113232 | 3894 | Los Angeles | 91304 | Canoga Park | -118.6125452 | 34.225826 | 24.24 | 48.25 | 45-50% | No |
| 6013360101 | 4576 | Contra Costa | 94803 | El Sobrante | -122.2870052 | 37.9824969 | 24.24 | 48.24 | 45-50% | No |
| 6023001101 | 6350 | Humboldt | 95521 | Arcata | -124.0989799 | 40.8875919 | 24.24 | 48.23 | 45-50% | No |
| 6065050600 | 6850 | Riverside | 92562 | Murrieta | -117.2284737 | 33.5730829 | 24.24 | 48.22 | 45-50% | No |
| 6033001000 | 6045 | Lake | 95453 | Lakeport | -122.8861893 | 38.9890591 | 24.23 | 48.20 | 45-50% | No |
| 6041112100 | 4315 | Marin | 94901 | San Rafael | -122.5205522 | 37.9610288 | 24.23 | 48.19 | 45-50% | No |
| 6085504311 | 7062 | Santa Clara | 95131 | San Jose | -121.8845877 | 37.3775245 | 24.21 | 48.18 | 45-50% | No |
| 6075011300 | 3143 | San Francisco | 94108 | San Francisco | -122.4093492 | 37.7946971 | 24.21 | 48.16 | 45-50% | No |
| 6037503802 | 5054 | Los Angeles | 90638 | La Mirada | -118.0035625 | 33.8982866 | 24.20 | 48.15 | 45-50% | No |
| 6001405800 | 3965 | Alameda | 94606 | Oakland | -122.2330985 | 37.7939452 | 24.20 | 48.14 | 45-50% | No |
| 6059099202 | 8323 | Orange | 92704 | Santa Ana | -117.9248099 | 33.7336169 | 24.20 | 48.13 | 45-50% | No |
| 6073013102 | 6487 | San Diego | 91911 | Chula Vista | -117.0657271 | 32.6166605 | 24.20 | 48.11 | 45-50% | No |
| 6037124600 | 3123 | Los Angeles | 91423 | Sherman Oaks | -118.4269321 | 34.1620692 | 24.19 | 48.10 | 45-50% | No |
| 6115040303 | 6555 | Yuba | 95901 | Marysville | -121.5423602 | 39.1207198 | 24.19 | 48.09 | 45-50% | No |
| 6037700502 | 4246 | Los Angeles | 90069 | West Hollywood | -118.3807073 | 34.0902917 | 24.19 | 48.08 | 45-50% | No |
| 6101050402 | 3970 | Sutter | 95991 | Yuba City | -121.6216316 | 39.0836731 | 24.18 | 48.06 | 45-50% | No |
| 6037920328 | 1990 | Los Angeles | 91355 | Valencia | -118.5720874 | 34.4168102 | 24.18 | 48.05 | 45-50% | No |
| 6073013309 | 7005 | San Diego | 91911 | Chula Vista | -117.0337536 | 32.6183278 | 24.17 | 48.04 | 45-50% | No |
| 6073015703 | 7102 | San Diego | 92020 | El Cajon | -116.9491346 | 32.7912925 | 24.17 | 48.03 | 45-50% | No |
| 6001435800 | 5382 | Alameda | 94580 | San Lorenzo | -122.1296018 | 37.6793691 | 24.17 | 48.01 | 45-50% | No |
| 6071009911 | 6456 | San Bernardino | 92392 | Victorville | -117.3581242 | 34.4940982 | 24.17 | 48.00 | 45-50% | No |
| 6037137103 | 4199 | Los Angeles | 91367 | Woodland Hills | -118.6013402 | 34.1744847 | 24.16 | 47.99 | 45-50% | No |
| 6029005700 | 2226 | Kern | 93524 | Edwards | -117.8740532 | 34.9163282 | 24.16 | 47.98 | 45-50% | No |
| 6001437702 | 4256 | Alameda | 94544 | Hayward | -122.0734492 | 37.638444 | 24.16 | 47.96 | 45-50% | No |
| 6059088901 | 6725 | Orange | 92844 | Garden Grove | -117.9622131 | 33.7606739 | 24.15 | 47.95 | 45-50% | No |
| 6021010200 | 4901 | Glenn | 95963 | Orland | -122.2109384 | 39.7422205 | 24.14 | 47.94 | 45-50% | No |
| 6001423400 | 4685 | Alameda | 94703 | Berkeley | -122.275884 | 37.8583737 | 24.14 | 47.93 | 45-50% | No |
| 6111007700 | 5988 | Ventura | 93065 | Simi Valley | -118.8083423 | 34.278331 | 24.12 | 47.91 | 45-50% | No |
| 6067007903 | 4576 | Sacramento | 95608 | Carmichael | -121.3175668 | 38.6559109 | 24.11 | 47.90 | 45-50% | No |
| 6059110301 | 6729 | Orange | 90620 | Buena Park | -118.0275847 | 33.8534538 | 24.11 | 47.89 | 45-50% | No |
| 6037575002 | 4627 | Los Angeles | 90804 | Long Beach | -118.1434676 | 33.7857845 | 24.10 | 47.87 | 45-50% | No |
| 6037609900 | 2034 | Los Angeles | 90732 | San Pedro | -118.302932 | 33.7409725 | 24.10 | 47.86 | 45-50% | No |
| 6065045224 | 5471 | Riverside | 92201 | Indio | -116.257874 | 33.6963551 | 24.08 | 47.85 | 45-50% | No |
| 6037183104 | 2065 | Los Angeles | 90042 | Los Angeles | -118.1723137 | 34.1236781 | 24.07 | 47.84 | 45-50% | No |
| 6037143800 | 4878 | Los Angeles | 91604 | Studio City | -118.3805891 | 34.135557 | 24.07 | 47.82 | 45-50% | No |
| 6059099411 | 5500 | Orange | 92647 | Huntington Beach | -117.9978509 | 33.719217 | 24.07 | 47.81 | 45-50% | No |
| 6073020206 | 5217 | San Diego | 92027 | Escondido | -117.0593149 | 33.1414533 | 24.07 | 47.80 | 45-50% | No |
| 6037910404 | 4130 | Los Angeles | 93550 | Palmdale | -118.1238241 | 34.5646915 | 24.06 | 47.79 | 45-50% | No |
| 6085504700 | 719 | Santa Clara | 94035 | Mountain View | -122.0497236 | 37.4164755 | 24.05 | 47.77 | 45-50% | No |
| 6095252314 | 4113 | Solano | 94533 | Fairfield | -122.0358438 | 38.2769991 | 24.04 | 47.76 | 45-50% | No |
| 6071010424 | 1966 | San Bernardino | 92285 | Landers | -116.6221331 | 34.3821714 | 24.02 | 47.75 | 45-50% | No |
| 6073019002 | 1759 | San Diego | 92028 | Fallbrook | -117.1450804 | 33.3908759 | 24.02 | 47.74 | 45-50% | No |
| 6037400800 | 3967 | Los Angeles | 91741 | Glendora | -117.8882752 | 34.1385557 | 24.01 | 47.72 | 45-50% | No |
| 6085504504 | 9882 | Santa Clara | 95035 | Milpitas | -121.8964329 | 37.4216447 | 24.01 | 47.71 | 45-50% | No |
| 6059011711 | 7305 | Orange | 92831 | Fullerton | -117.8692764 | 33.8856931 | 24.00 | 47.70 | 45-50% | No |
| 6081601502 | 5125 | San Mateo | 94015 | Daly City | -122.4782558 | 37.6692204 | 24.00 | 47.69 | 45-50% | No |
| 6095253204 | 7098 | Solano | 95688 | Vacaville | -121.9869787 | 38.3825661 | 24.00 | 47.67 | 45-50% | No |
| 6065050500 | 13261 | Riverside | 92563 | Murrieta | -117.1625546 | 33.5490166 | 24.00 | 47.66 | 45-50% | No |
| 6073019404 | 3984 | San Diego | 92083 | Vista | -117.251038 | 33.21679 | 23.99 | 47.65 | 45-50% | No |
| 6001409900 | 3308 | Alameda | 94605 | Oakland | -122.1353845 | 37.7619882 | 23.99 | 47.64 | 45-50% | No |
| 6037272302 | 4074 | Los Angeles | 90066 | Los Angeles | -118.4274418 | 34.0021096 | 23.98 | 47.62 | 45-50% | No |
| 6037401201 | 3110 | Los Angeles | 91740 | Glendora | -117.8360111 | 34.125033 | 23.98 | 47.61 | 45-50% | No |
| 6085504101 | 4273 | Santa Clara | 95127 | San Jose | -121.8203847 | 37.3693396 | 23.98 | 47.60 | 45-50% | No |
| 6037702002 | 5700 | Los Angeles | 90405 | Santa Monica | -118.4861752 | 34.005774 | 23.98 | 47.58 | 45-50% | No |
| 6037571504 | 4699 | Los Angeles | 90807 | Long Beach | -118.1697128 | 33.8387095 | 23.97 | 47.57 | 45-50% | No |
| 6067009633 | 3309 | Sacramento | 95823 | Sacramento | -121.4384109 | 38.4632142 | 23.97 | 47.56 | 45-50% | No |
| 6073001800 | 5319 | San Diego | 92116 | San Diego | -117.1186054 | 32.7628849 | 23.95 | 47.55 | 45-50% | No |
| 6031000701 | 5321 | Kings | 93230 | Hanford | -119.6393201 | 36.3580168 | 23.95 | 47.53 | 45-50% | No |
| 6037910706 | 6022 | Los Angeles | 93543 | Littlerock | -117.9994644 | 34.5534723 | 23.94 | 47.52 | 45-50% | No |
| 6037920115 | 4149 | Los Angeles | 91355 | Valencia | -118.5500603 | 34.4257895 | 23.94 | 47.51 | 45-50% | No |
| 6075060502 | 3216 | San Francisco | 94134 | San Francisco | -122.4199075 | 37.7109991 | 23.94 | 47.50 | 45-50% | No |
| 6071011500 | 1890 | San Bernardino | 92305 | Angelus Oaks | -116.8684367 | 34.1433712 | 23.93 | 47.48 | 45-50% | No |
| 6065043222 | 3842 | Riverside | 92592 | Temecula | -117.1252348 | 33.486084 | 23.93 | 47.47 | 45-50% | No |
| 6037920037 | 7131 | Los Angeles | 91387 | Canyon Country | -118.4506856 | 34.4133059 | 23.92 | 47.46 | 45-50% | No |
| 6107001501 | 5258 | Tulare | 93221 | Exeter | -119.1444506 | 36.3043939 | 23.91 | 47.45 | 45-50% | No |
| 6071002016 | 3883 | San Bernardino | 91730 | Rancho Cucamonga | -117.6094279 | 34.1135458 | 23.91 | 47.43 | 45-50% | No |
| 6013303204 | 4182 | Contra Costa | 94513 | Brentwood | -121.7087615 | 37.9289646 | 23.91 | 47.42 | 45-50% | No |
| 6087122500 | 6670 | Santa Cruz | 95076 | Watsonville | -121.7451776 | 36.9514486 | 23.91 | 47.41 | 45-50% | No |
| 6075020800 | 6577 | San Francisco | 94110 | San Francisco | -122.4191487 | 37.7594331 | 23.90 | 47.40 | 45-50% | No |
| 6053014800 | 6112 | Monterey | 93925 | Chualar | -121.4025672 | 36.5669002 | 23.89 | 47.38 | 45-50% | No |
| 6073008360 | 5857 | San Diego | 92126 | San Diego | -117.1295038 | 32.8998788 | 23.89 | 47.37 | 45-50% | No |
| 6037920102 | 5668 | Los Angeles | 91384 | Castaic | -118.6002393 | 34.6330733 | 23.89 | 47.36 | 45-50% | No |
| 6073003201 | 4932 | San Diego | 92139 | San Diego | -117.0608884 | 32.6836181 | 23.88 | 47.35 | 45-50% | No |
| 6073021000 | 4440 | San Diego | 92004 | Borrego Springs | -116.27356 | 33.1112185 | 23.87 | 47.33 | 45-50% | No |
| 6097154201 | 3925 | Sonoma | 95425 | Cloverdale | -123.0170717 | 38.8133955 | 23.86 | 47.32 | 45-50% | No |
| 6067004906 | 2797 | Sacramento | 95823 | Sacramento | -121.4583035 | 38.4780464 | 23.85 | 47.31 | 45-50% | No |
| 6071010409 | 3018 | San Bernardino | 92277 | Twentynine Palms | -115.5309263 | 34.2421428 | 23.85 | 47.29 | 45-50% | No |
| 6037920043 | 5711 | Los Angeles | 91387 | Canyon Country | -118.4409013 | 34.3909399 | 23.85 | 47.28 | 45-50% | No |
| 6045010400 | 3467 | Mendocino | 95437 | Fort Bragg | -123.8051687 | 39.4499078 | 23.84 | 47.27 | 45-50% | No |
| 6065044104 | 2647 | Riverside | 92220 | Banning | -116.905094 | 33.9845789 | 23.84 | 47.26 | 45-50% | No |
| 6059110106 | 3577 | Orange | 90630 | Cypress | -118.0573402 | 33.8142505 | 23.83 | 47.24 | 45-50% | No |
| 6085505303 | 5940 | Santa Clara | 95050 | Santa Clara | -121.9639652 | 37.3583043 | 23.83 | 47.23 | 45-50% | No |
| 6085503211 | 4744 | Santa Clara | 95121 | San Jose | -121.8323618 | 37.3118522 | 23.82 | 47.22 | 45-50% | No |
| 6037212502 | 2767 | Los Angeles | 90005 | Los Angeles | -118.3069674 | 34.0586417 | 23.82 | 47.21 | 45-50% | No |
| 6071009708 | 5221 | San Bernardino | 92308 | Apple Valley | -117.1272467 | 34.4076989 | 23.81 | 47.19 | 45-50% | No |
| 6037106111 | 4334 | Los Angeles | 91342 | Sylmar | -118.407505 | 34.3213672 | 23.81 | 47.18 | 45-50% | No |
| 6001405301 | 2603 | Alameda | 94606 | Oakland | -122.2513558 | 37.8020757 | 23.80 | 47.17 | 45-50% | No |
| 6073016100 | 5788 | San Diego | 92020 | El Cajon | -116.9898526 | 32.7999329 | 23.80 | 47.16 | 45-50% | No |
| 6029005401 | 6099 | Kern | 93555 | Ridgecrest | -117.6877641 | 35.6445188 | 23.80 | 47.14 | 45-50% | No |
| 6037501600 | 7190 | Los Angeles | 90601 | Whittier | -118.008555 | 33.9760214 | 23.79 | 47.13 | 45-50% | No |
| 6037460302 | 4442 | Los Angeles | 91001 | Altadena | -118.1576938 | 34.1943756 | 23.79 | 47.12 | 45-50% | No |
| 6075012201 | 4567 | San Francisco | 94109 | San Francisco | -122.4163535 | 37.7858464 | 23.78 | 47.11 | 45-50% | No |

| | | | | | | |
|---|---|---|---|---|---|---|
| 6037275101 | 1177 | Los Angeles | 90230 | Culver City | -118.4045296 | 33.9992665 |
| 6113010310 | 5485 | Yolo | 95691 | West Sacramento | -121.5770403 | 38.5451518 |
| 6073013000 | 5903 | San Diego | 91910 | Chula Vista | -117.0798163 | 32.6248441 |
| 6059062627 | 3308 | Orange | 92612 | Irvine | -117.8336974 | 33.6531552 |
| 6037461501 | 3700 | Los Angeles | 91104 | Pasadena | -118.1372076 | 34.1741653 |
| 6037278001 | 2458 | Los Angeles | 90045 | Los Angeles | -118.4012 | 33.9569112 |
| 6073010200 | 6800 | San Diego | 91932 | Imperial Beach | -117.1145672 | 32.5653537 |
| 6037405900 | 4049 | Los Angeles | 91722 | Covina | -117.8902516 | 34.1030754 |
| 6065042711 | 4543 | Riverside | 92586 | Sun City | -117.1928886 | 33.7014254 |
| 6059099603 | 6126 | Orange | 92647 | Huntington Beach | -118.0388823 | 33.7473928 |
| 6097151201 | 6855 | Sonoma | 94931 | Cotati | -122.719615 | 38.3395569 |
| 6065044602 | 2907 | Riverside | 92262 | Palm Springs | -116.5369071 | 33.8376124 |
| 6085503336 | 3492 | Santa Clara | 95121 | San Jose | -121.8043549 | 37.3067237 |
| 6059075401 | 3895 | Orange | 92706 | Santa Ana | -117.860883 | 33.7674578 |
| 6021010300 | 2373 | Glenn | 95939 | Elk Creek | -122.501299 | 39.6052917 |
| 6037700200 | 6321 | Los Angeles | 90046 | Los Angeles | -118.365303 | 34.0924899 |
| 6013303102 | 7624 | Contra Costa | 94513 | Brentwood | -121.7074839 | 37.9577924 |
| 6037113213 | 4316 | Los Angeles | 91311 | Chatsworth | -118.6071365 | 34.2519958 |
| 6059063603 | 6223 | Orange | 92663 | Newport Beach | -117.9474672 | 33.6344482 |
| 6073010003 | 5906 | San Diego | 92154 | San Diego | -117.0440935 | 32.5788424 |
| 6075022903 | 3384 | San Francisco | 94110 | San Francisco | -122.4062364 | 37.7517621 |
| 6075020900 | 4372 | San Francisco | 94110 | San Francisco | -122.4184125 | 37.7518186 |
| 6053001500 | 5741 | Monterey | 93901 | Salinas | -121.6725273 | 36.6584132 |
| 6053011101 | 5188 | Monterey | 93924 | Carmel Valley | -121.4738188 | 36.3642891 |
| 6073014200 | 6277 | San Diego | 91945 | Lemon Grove | -117.0431132 | 32.7274195 |
| 6085503506 | 6432 | Santa Clara | 95122 | San Jose | -121.8272382 | 37.3436482 |
| 6053014301 | 3602 | Monterey | 93908 | Salinas | -121.7956088 | 36.7252682 |
| 6065049600 | 7176 | Riverside | 92591 | Temecula | -117.1579375 | 33.5357701 |
| 6079010016 | 4864 | San Luis Obispo | 93446 | Paso Robles | -120.7906393 | 35.6400242 |
| 6097152702 | 5242 | Sonoma | 95403 | Santa Rosa | -122.7912911 | 38.5043031 |
| 6053000101 | 2079 | Monterey | 93906 | Salinas | -121.6220696 | 36.7396574 |
| 6019005905 | 6809 | Fresno | 93657 | Sanger | -119.5874178 | 36.7864934 |
| 6059088203 | 4819 | Orange | 92840 | Garden Grove | -117.9586224 | 33.7849481 |
| 6059086801 | 3267 | Orange | 92801 | Anaheim | -117.9804644 | 33.8485717 |
| 6073002707 | 5369 | San Diego | 92105 | San Diego | -117.0895143 | 32.7529867 |
| 6065044606 | 2852 | Riverside | 92262 | Palm Springs | -116.6260603 | 33.8749566 |
| 6021010100 | 8192 | Glenn | 95963 | Orland | -122.1823274 | 39.744188 |
| 6085504507 | 5768 | Santa Clara | 95035 | Milpitas | -121.9129194 | 37.4356863 |
| 6071010411 | 6752 | San Bernardino | 92284 | Yucca Valley | -116.4313005 | 34.1517898 |
| 6095250300 | 3206 | Solano | 94591 | Vallejo | -122.2235833 | 38.1048774 |
| 6037575001 | 3608 | Los Angeles | 90815 | Long Beach | -118.1471333 | 33.794704 |
| 6037403901 | 3110 | Los Angeles | 91740 | Glendora | -117.873247 | 34.1215084 |
| 6075022801 | 5078 | San Francisco | 94110 | San Francisco | -122.4125093 | 37.7607261 |
| 6059011716 | 5410 | Orange | 92870 | Placentia | -117.8529546 | 33.8722006 |
| 6083002211 | 5366 | Santa Barbara | 93454 | Santa Maria | -120.3928629 | 34.9569166 |
| 6059062612 | 8186 | Orange | 92612 | Irvine | -117.8143677 | 33.6622148 |
| 6059001704 | 7451 | Orange | 92833 | Fullerton | -117.9568638 | 33.8866381 |
| 6013303203 | 8491 | Contra Costa | 94513 | Brentwood | -121.7320102 | 37.9471133 |
| 6037503401 | 6529 | Los Angeles | 90603 | Whittier | -117.9846451 | 33.9356035 |
| 6067005204 | 4220 | Sacramento | 95826 | Sacramento | -121.3854151 | 38.5497903 |
| 6073010300 | 4507 | San Diego | 91932 | Imperial Beach | -117.1144635 | 32.575638 |
| 6001442700 | 2873 | Alameda | 94536 | Fremont | -122.0081115 | 37.5371537 |
| 6061021003 | 6210 | Placer | 95678 | Roseville | -121.275694 | 38.7645742 |
| 6111005502 | 5127 | Ventura | 93010 | Camarillo | -119.0527386 | 34.2197814 |
| 6073009000 | 3861 | San Diego | 92111 | San Diego | -117.1788279 | 32.7782882 |
| 6073013702 | 5357 | San Diego | 91977 | Spring Valley | -116.9969521 | 32.7405936 |
| 6001420400 | 3124 | Alameda | 94710 | Berkeley | -122.3256618 | 37.8886213 |
| 6097153902 | 4147 | Sonoma | 95448 | Healdsburg | -122.8671471 | 38.6120817 |
| 6073014902 | 3186 | San Diego | 91942 | La Mesa | -117.0117565 | 32.7707635 |
| 6073012303 | 3431 | San Diego | 91910 | Chula Vista | -117.0732999 | 32.6512908 |
| 6059001301 | 6423 | Orange | 90631 | La Habra | -117.9678496 | 33.9227729 |
| 6001436100 | 5261 | Alameda | 94580 | San Lorenzo | -122.1235777 | 37.6718054 |
| 6053000501 | 4842 | Monterey | 93905 | Salinas | -121.632795 | 36.6758875 |
| 6037571900 | 5509 | Los Angeles | 90807 | Long Beach | -118.1773895 | 33.8319177 |
| 6001440336 | 4459 | Alameda | 94587 | Union City | -122.0175013 | 37.5811633 |
| 6029002804 | 2672 | Kern | 93309 | Bakersfield | -119.0678215 | 35.3449134 |
| 6001432700 | 2478 | Alameda | 94577 | San Leandro | -122.1428437 | 37.7270703 |
| 6007001704 | 3060 | Butte | 95965 | Oroville | -121.5013525 | 39.960108 |
| 6113010302 | 7270 | Yolo | 95691 | West Sacramento | -121.5334072 | 38.5450814 |
| 6073002708 | 5689 | San Diego | 92115 | San Diego | -117.0830585 | 32.7531727 |
| 6037186202 | 1974 | Los Angeles | 90065 | Los Angeles | -118.2241897 | 34.1200291 |
| 6029000907 | 2463 | Kern | 93306 | Bakersfield | -118.9229278 | 35.379737 |
| 6037189300 | 3077 | Los Angeles | 90068 | Los Angeles | -118.3093146 | 34.1112674 |
| 6037214901 | 3083 | Los Angeles | 90048 | Los Angeles | -118.3872385 | 34.0742811 |
| 6097152000 | 2079 | Sonoma | 95404 | Santa Rosa | -122.713301 | 38.4416422 |
| 6075016802 | 3264 | San Francisco | 94102 | San Francisco | -122.4249293 | 37.7735403 |
| 6095253205 | 3022 | Solano | 95688 | Vacaville | -121.9717589 | 38.3742945 |
| 6085512311 | 3314 | Santa Clara | 95037 | Morgan Hill | -121.6599882 | 37.1496048 |
| 6001410000 | 2805 | Alameda | 94605 | Oakland | -122.1332163 | 37.7447566 |
| 6013336202 | 5701 | Contra Costa | 94520 | Concord | -122.0446085 | 37.9550364 |
| 6037503502 | 4130 | Los Angeles | 90604 | Whittier | -118.003196 | 33.9320286 |
| 6001442900 | 7194 | Alameda | 94538 | Fremont | -121.9748246 | 37.5183894 |
| 6071010417 | 3251 | San Bernardino | 92256 | Morongo Valley | -116.5601965 | 34.0582671 |
| 6053000102 | 9054 | Monterey | 93906 | Salinas | -121.6348578 | 36.7107945 |
| 6065044102 | 2841 | Riverside | 92220 | Banning | -116.8940377 | 33.9307499 |
| 6037128602 | 3189 | Los Angeles | 91401 | Van Nuys | -118.4356063 | 34.1712144 |
| 6059099413 | 8230 | Orange | 92648 | Huntington Beach | -118.0005081 | 33.6929418 |
| 6037109200 | 2669 | Los Angeles | 91344 | Granada Hills | -118.4746272 | 34.277998 |
| 6075020200 | 6269 | San Francisco | 94103 | San Francisco | -122.4241789 | 37.7671163 |
| 6101050401 | 4783 | Sutter | 95991 | Yuba City | -121.6248059 | 39.1071246 |
| 6055201003 | 4389 | Napa | 94558 | Napa | -122.2313016 | 38.2374372 |
| 6085506301 | 5334 | Santa Clara | 95117 | San Jose | -121.9614732 | 37.3197153 |
| 6001451506 | 3138 | Alameda | 94550 | Livermore | -121.7291862 | 37.6833516 |
| 6037461100 | 4844 | Los Angeles | 91001 | Altadena | -118.1397371 | 34.1851953 |
| 6071009707 | 5920 | San Bernardino | 92308 | Apple Valley | -117.2261814 | 34.4477844 |
| 6001440335 | 6496 | Alameda | 94587 | Union City | -122.0122841 | 37.5913508 |
| 6037265304 | 3570 | Los Angeles | 90024 | Los Angeles | -118.451161 | 34.0677546 |
| 6037403721 | 4998 | Los Angeles | 91722 | Covina | -117.8769958 | 34.097573 |
| 6037113237 | 3661 | Los Angeles | 91311 | Chatsworth | -118.6117577 | 34.244544 |
| 6065045000 | 3424 | Riverside | 92234 | Cathedral City | -116.4698341 | 33.7750205 |
| 6037570902 | 3616 | Los Angeles | 90713 | Lakewood | -118.1210795 | 33.8532314 |
| 6065046405 | 3974 | Riverside | 92595 | Wildomar | -117.2726286 | 33.6205579 |
| 6059099905 | 3053 | Orange | 92683 | Westminster | -118.0301153 | 33.7704951 |
| 6037406101 | 3139 | Los Angeles | 91723 | Covina | -117.8911488 | 34.0902906 |
| 6037267404 | 2806 | Los Angeles | 90025 | Los Angeles | -118.4605333 | 34.0456314 |
| 6085504422 | 3672 | Santa Clara | 95035 | Milpitas | -121.906949 | 37.4585704 |
| 6005000500 | 2995 | Amador | 95642 | Jackson | -120.7391956 | 38.3175704 |
| 6029000910 | 9904 | Kern | 93306 | Bakersfield | -118.9067286 | 35.4138845 |
| 6065040703 | 2780 | Riverside | 92860 | Norco | -117.5346297 | 33.9420596 |
| 6059062626 | 2773 | Orange | 92612 | Irvine | -117.8396723 | 33.652607 |
| 6073018100 | 5659 | San Diego | 92054 | Oceanside | -117.3611032 | 33.1771015 |
| 6073003204 | 3453 | San Diego | 91902 | Bonita | -117.0578802 | 32.656474 |
| 6037403408 | 6576 | Los Angeles | 91789 | Walnut | -117.8818963 | 34.0254501 |
| 6075031201 | 6167 | San Francisco | 94112 | San Francisco | -122.4573334 | 37.7217805 |
| 6111005403 | 2694 | Ventura | 93010 | Camarillo | -119.0342535 | 34.2219343 |
| 6073010010 | 5510 | San Diego | 92154 | San Diego | -117.0636964 | 32.5783698 |
| 6037408628 | 5103 | Los Angeles | 91745 | Hacienda Heights | -117.943153 | 33.9836985 |
| 6037403802 | 5553 | Los Angeles | 91724 | Covina | -117.8463468 | 34.1030793 |
| 6059063903 | 3957 | Orange | 92626 | Costa Mesa | -117.9008448 | 33.6821945 |
| 6075026100 | 6810 | San Francisco | 94112 | San Francisco | -122.4431582 | 37.7196219 |
| 6073008509 | 6647 | San Diego | 92111 | San Diego | -117.1718159 | 32.8149643 |
| 6085505001 | 9741 | Santa Clara | 95054 | Santa Clara | -121.9712124 | 37.4003031 |
| 6095250103 | 4292 | Solano | 94591 | Vallejo | -122.2216027 | 38.1164685 |
| 6059042310 | 8391 | Orange | 92675 | San Juan Capistrano | -117.6768613 | 33.4852789 |
| 6037462202 | 2928 | Los Angeles | 91101 | Pasadena | -118.1369288 | 34.1489289 |
| 6059001705 | 4343 | Orange | 92835 | Fullerton | -117.9402667 | 33.9117646 |
| 6037276000 | 5396 | Los Angeles | 90045 | Los Angeles | -118.3890198 | 33.9691783 |
| 6081611700 | 5970 | San Mateo | 94025 | Menlo Park | -122.1506224 | 37.4941291 |
| 6073018601 | 4779 | San Diego | 92058 | Oceanside | -117.355054 | 33.229909 |
| 6095253404 | 6611 | Solano | 95620 | Dixon | -121.8314911 | 38.4598591 |
| 6073002903 | 3717 | San Diego | 92115 | San Diego | -117.0553352 | 32.7498573 |
| 6037462301 | 4655 | Los Angeles | 91106 | Pasadena | -118.1270027 | 34.1549547 |
| 6085506501 | 7710 | Santa Clara | 95117 | San Jose | -121.9560416 | 37.2980229 |
| 6037702901 | 8866 | Los Angeles | 90292 | Marina del Rey | -118.4532292 | 33.9815095 |
| 6013307204 | 4300 | Contra Costa | 94509 | Antioch | -121.8308707 | 37.9946847 |
| 6111004000 | 6586 | Ventura | 93033 | Oxnard | -119.1721776 | 34.1674563 |
| 6037403702 | 3794 | Los Angeles | 91724 | Covina | -117.8557814 | 34.0913988 |
| 6065043010 | 5687 | Riverside | 92530 | Lake Elsinore | -117.387881 | 33.6841829 |
| 6077004701 | 2757 | San Joaquin | 95237 | Lockeford | -121.1494646 | 38.1621306 |
| 6059021915 | 3985 | Orange | 92807 | Anaheim | -117.8115691 | 33.8443705 |
| 6037554519 | 3613 | Los Angeles | 90703 | Cerritos | -118.0569743 | 33.8527649 |
| 6107000100 | 5142 | Tulare | 93271 | Three Rivers | -118.8366159 | 36.5233963 |
| 6061020806 | 3494 | Placer | 95678 | Roseville | -121.2762266 | 38.7453902 |
| 6097152801 | 5547 | Sonoma | 95403 | Santa Rosa | -122.7503889 | 38.4828618 |
| 6067007701 | 6126 | Sacramento | 95608 | Carmichael | -121.3373129 | 38.6172437 |
| 6065042717 | 5079 | Riverside | 92587 | Sun City | -117.2521561 | 33.7021362 |
| 6075015801 | 3594 | San Francisco | 94115 | San Francisco | -122.4373557 | 37.7813029 |
| 6073003108 | 3520 | San Diego | 91977 | Spring Valley | -117.0155941 | 32.7074478 |
| 6065041807 | 2400 | Riverside | 92882 | Corona | -117.5772407 | 33.8601348 |
| 6111000400 | 6758 | Ventura | 93060 | Santa Paula | -119.0487659 | 34.4021613 |
| 6065043239 | 6792 | Riverside | 92592 | Temecula | -116.9857528 | 33.5633922 |
| 6073014500 | 3749 | San Diego | 91941 | La Mesa | -117.0438659 | 32.7495164 |
| 6013304001 | 3718 | Contra Costa | 94513 | Brentwood | -121.7489395 | 37.8837503 |
| 6053000300 | 4177 | Monterey | 93906 | Salinas | -121.6595817 | 36.7030908 |
| 6059088904 | 5766 | Orange | 92683 | Westminster | -117.9548828 | 33.7485828 |
| 6037408625 | 4160 | Los Angeles | 91745 | Hacienda Heights | -117.9634087 | 33.9886212 |
| 6059110110 | 5706 | Orange | 90630 | Cypress | -118.0297412 | 33.8305662 |
| 6073020309 | 3945 | San Diego | 92026 | Escondido | -117.1090217 | 33.1355986 |
| 6095253108 | 4088 | Solano | 95687 | Vacaville | -122.0008642 | 38.3288304 |
| 6037462700 | 5471 | Los Angeles | 91106 | Pasadena | -118.1144868 | 34.1519261 |
| 6111005004 | 5419 | Ventura | 93036 | Oxnard | -119.1656216 | 34.2505709 |
| 6097153006 | 7286 | Sonoma | 95401 | Santa Rosa | -122.7584138 | 38.4432933 |
| 6111007612 | 4762 | Ventura | 93021 | Moorpark | -118.906726 | 34.2752843 |
| 6037300800 | 6947 | Los Angeles | 91208 | Glendale | -118.220602 | 34.1845879 |
| 6065043271 | 3930 | Riverside | 92595 | Wildomar | -117.2755965 | 33.6006686 |
| 6007002200 | 5156 | Butte | 95969 | Paradise | -121.6824752 | 39.674685 |
| 6053000701 | 6439 | Monterey | 93905 | Salinas | -121.609157 | 36.6878097 |
| 6037216800 | 3289 | Los Angeles | 90035 | Los Angeles | -118.3706043 | 34.0557841 |
| 6085512043 | 6129 | Santa Clara | 95111 | San Jose | -121.8048672 | 37.2618681 |
| 6071011101 | 3771 | San Bernardino | 92382 | Running Springs | -117.1403551 | 34.1730842 |
| 6065043314 | 3631 | Riverside | 92544 | Hemet | -116.9389807 | 33.733193 |
| 6037141101 | 4066 | Los Angeles | 91423 | Sherman Oaks | -118.4243044 | 34.151167 |
| 6009000210 | 9515 | Calaveras | 95252 | Valley Springs | -120.8741765 | 38.1930259 |
| 6073008507 | 7627 | San Diego | 92117 | San Diego | -117.1737801 | 32.8262504 |
| 6073020017 | 3282 | San Diego | 92081 | Vista | -117.222755 | 33.1484964 |
| 6059001504 | 4605 | Orange | 92821 | Brea | -117.890759 | 33.9160273 |
| 6001443001 | 2917 | Alameda | 94538 | Fremont | -121.9515237 | 37.5184218 |
| 6071010018 | 7068 | San Bernardino | 92345 | Hesperia | -117.3433595 | 34.4135996 |
| 6037501700 | 3695 | Los Angeles | 90605 | Whittier | -118.0198835 | 33.9618209 |
| 6029000906 | 4355 | Kern | 93306 | Bakersfield | -118.9406565 | 35.3796667 |
| 6037650401 | 4472 | Los Angeles | 90503 | Torrance | -118.3368653 | 33.8428957 |
| 6085503507 | 2182 | Santa Clara | 95122 | San Jose | -121.8319402 | 37.340185 |
| 6001435900 | 5073 | Alameda | 94580 | San Lorenzo | -122.147305 | 37.6724681 |
| 6071008710 | 4442 | San Bernardino | 92399 | Yucaipa | -117.0490963 | 34.0257037 |
| 6083002102 | 2084 | Santa Barbara | 93454 | Santa Maria | -120.4267767 | 34.9421111 |
| 6001444100 | 7280 | Alameda | 94560 | Newark | -122.0361606 | 37.550978 |
| 6087110600 | 8349 | Santa Cruz | 95076 | Watsonville | -121.7840141 | 36.9289297 |
| 6065043304 | 6816 | Riverside | 92544 | Hemet | -116.90936 | 33.6871007 |
| 6037192300 | 2799 | Los Angeles | 90004 | Los Angeles | -118.3284923 | 34.079743 |
| 6037113322 | 3947 | Los Angeles | 91311 | Chatsworth | -118.5721382 | 34.2536788 |
| 6055200501 | 5013 | Napa | 94558 | Napa | -122.3010777 | 38.3110736 |
| 6081606100 | 4246 | San Mateo | 94401 | San Mateo | -122.3144888 | 37.5807361 |
| 6073000900 | 5178 | San Diego | 92104 | San Diego | -117.141957 | 32.7518529 |
| 6037900201 | 1261 | Los Angeles | 93535 | Lancaster | -117.956249 | 34.7083865 |
| 6073013310 | 28960 | San Diego | 91913 | Chula Vista | -116.9977852 | 32.6261904 |
| 6085509304 | 2871 | Santa Clara | 94043 | Mountain View | -122.0951903 | 37.4174125 |
| 6019005513 | 2952 | Fresno | 93611 | Clovis | -119.7018656 | 36.8446768 |
| 6059052502 | 5913 | Orange | 92780 | Tustin | -117.8109989 | 33.7195162 |
| 6073016201 | 5843 | San Diego | 92020 | El Cajon | -116.9918628 | 32.8138271 |
| 6095252903 | 4368 | Solano | 95688 | Vacaville | -122.0352498 | 38.4381951 |
| 6037311300 | 3811 | Los Angeles | 91505 | Burbank | -118.3431013 | 34.1741462 |
| 6037702700 | 3440 | Los Angeles | 90230 | Culver City | -118.400984 | 34.0058662 |
| 6065043009 | 4736 | Riverside | 92530 | Lake Elsinore | -117.3888925 | 33.7012951 |
| 6101050301 | 2403 | Sutter | 95991 | Yuba City | -121.6292546 | 39.1196085 |
| 6075012100 | 3833 | San Francisco | 94102 | San Francisco | -122.4118881 | 37.7888066 |
| 6081610100 | 2484 | San Mateo | 94063 | Redwood City | -122.2386868 | 37.4932225 |
| 6037403404 | 2521 | Los Angeles | 91789 | Walnut | -117.8513684 | 34.0292579 |
| 6073013908 | 3708 | San Diego | 91977 | Spring Valley | -117.0050292 | 32.7112382 |
| 6039000509 | 5935 | Madera | 93636 | Madera | -119.8457067 | 36.9648983 |
| 6037101110 | 4731 | Los Angeles | 91042 | Tujunga | -118.2929869 | 34.2594737 |
| 6059088002 | 3936 | Orange | 92841 | Garden Grove | -117.9715258 | 33.7957982 |
| 6037273902 | 4227 | Los Angeles | 90291 | Venice | -118.4661137 | 33.983199 |
| 6071010024 | 5359 | San Bernardino | 92345 | Hesperia | -117.3111382 | 34.3367941 |
| 6111008202 | 4353 | Ventura | 93063 | Simi Valley | -118.7274118 | 34.2776642 |
| 6059075507 | 5187 | Orange | 92780 | Tustin | -117.8127013 | 33.7362411 |
| 6037571502 | 4661 | Los Angeles | 90807 | Long Beach | -118.1835447 | 33.8421855 |
| 6037481713 | 2507 | Los Angeles | 91754 | Monterey Park | -118.1291575 | 34.0679641 |
| 6081600900 | 3933 | San Mateo | 94015 | Daly City | -122.4922836 | 37.7055918 |
| 6083002209 | 3321 | Santa Barbara | 93454 | Santa Maria | -120.4307367 | 34.97297 |
| 6073019501 | 4147 | San Diego | 92083 | Vista | -117.2495976 | 33.2084741 |
| 6037201302 | 3732 | Los Angeles | 90042 | Los Angeles | -118.1838819 | 34.097882 |

| | | | | | | | | | | | |
|---|---|---|---|---|---|---|---|---|---|---|---|
| 6037700801 | 5220 | Los Angeles | 90210 | Beverly Hills | -118.3967808 | 34.0717107 | 22.57 | 44.31 | 40-45% | No | 0.048 |
| 6071008706 | 12298 | San Bernardino | 92399 | Yucaipa | -117.0805957 | 34.0435278 | 22.56 | 44.29 | 40-45% | No | 0.068 |
| 6067005404 | 5611 | Sacramento | 95864 | Sacramento | -121.3915944 | 38.5698188 | 22.55 | 44.28 | 40-45% | No | 0.050 |
| 6085509108 | 4281 | Santa Clara | 94043 | Mountain View | -122.0570303 | 37.4004244 | 22.54 | 44.27 | 40-45% | No | 0.035 |
| 6073010001 | 4097 | San Diego | 92154 | San Diego | -117.0554913 | 32.586813 | 22.53 | 44.26 | 40-45% | No | 0.038 |
| 6073002803 | 5370 | San Diego | 92115 | San Diego | -117.0835961 | 32.7638379 | 22.53 | 44.24 | 40-45% | No | 0.042 |
| 6067008128 | 2462 | Sacramento | 95621 | Citrus Heights | -121.3044735 | 38.7183737 | 22.51 | 44.23 | 40-45% | No | 0.053 |
| 6019005605 | 1470 | Fresno | 93710 | Fresno | -119.732754 | 36.8303071 | 22.50 | 44.22 | 40-45% | No | 0.065 |
| 6083002703 | 4165 | Santa Barbara | 93436 | Lompoc | -120.4449545 | 34.6429274 | 22.49 | 44.20 | 40-45% | No | 0.038 |
| 6071025000 | 8850 | San Bernardino | 92310 | Fort Irwin | -116.6442497 | 35.4026962 | 22.49 | 44.19 | 40-45% | No | 0.057 |
| 6073009306 | 5589 | San Diego | 92123 | San Diego | -117.1197526 | 32.7997476 | 22.49 | 44.18 | 40-45% | No | 0.044 |
| 6001451401 | 5850 | Alameda | 94551 | Livermore | -121.7629422 | 37.6959861 | 22.49 | 44.17 | 40-45% | No | 0.040 |
| 6083001102 | 4740 | Santa Barbara | 93101 | Santa Barbara | -119.7129078 | 34.4161337 | 22.48 | 44.15 | 40-45% | No | 0.040 |
| 6037267901 | 2428 | Los Angeles | 90067 | Los Angeles | -118.4137159 | 34.056456 | 22.48 | 44.14 | 40-45% | No | 0.046 |
| 6071002023 | 5118 | San Bernardino | 91701 | Rancho Cucamonga | -117.5930105 | 34.1294228 | 22.47 | 44.13 | 40-45% | No | 0.065 |
| 6037900505 | 4002 | Los Angeles | 93535 | Lancaster | -118.1080444 | 34.6822484 | 22.47 | 44.12 | 40-45% | No | 0.062 |
| 6037103102 | 4751 | Los Angeles | 91040 | Sunland | -118.3073883 | 34.2633843 | 22.47 | 44.10 | 40-45% | No | 0.055 |
| 6069000600 | 8317 | San Benito | 95023 | Hollister | -121.3738293 | 36.8303283 | 22.47 | 44.09 | 40-45% | No | 0.040 |
| 6037276500 | 5063 | Los Angeles | 90045 | Los Angeles | -118.4180348 | 33.9665412 | 22.46 | 44.08 | 40-45% | No | 0.046 |
| 6037123902 | 2561 | Los Angeles | 91607 | Valley Village | -118.3922288 | 34.1758783 | 22.46 | 44.07 | 40-45% | No | 0.053 |
| 6059075815 | 5176 | Orange | 92867 | Orange | -117.8253994 | 33.7970143 | 22.45 | 44.05 | 40-45% | No | 0.048 |
| 6045010700 | 6203 | Mendocino | 95490 | Willits | -123.3671818 | 39.4223312 | 22.45 | 44.04 | 40-45% | No | 0.038 |
| 6037214502 | 5528 | Los Angeles | 90036 | Los Angeles | -118.3504042 | 34.0680052 | 22.44 | 44.03 | 40-45% | No | 0.048 |
| 6037503701 | 4717 | Los Angeles | 90604 | Whittier | -117.9948416 | 33.9274179 | 22.44 | 44.02 | 40-45% | No | 0.046 |
| 6071010004 | 8437 | San Bernardino | 92395 | Victorville | -117.2703695 | 34.489825 | 22.43 | 44.00 | 40-45% | No | 0.065 |
| 6109005201 | 1778 | Tuolumne | 95327 | Jamestown | -120.4501293 | 37.7908267 | 22.43 | 43.99 | 40-45% | No | 0.055 |
| 6075022901 | 4640 | San Francisco | 94110 | San Francisco | -122.4139453 | 37.7511975 | 22.42 | 43.98 | 40-45% | No | 0.030 |
| 6037214501 | 2932 | Los Angeles | 90036 | Los Angeles | -118.3578948 | 34.0712362 | 22.41 | 43.97 | 40-45% | No | 0.048 |
| 6059099230 | 4358 | Orange | 92708 | Fountain Valley | -117.9499072 | 33.6940852 | 22.40 | 43.95 | 40-45% | No | 0.044 |
| 6073010106 | 5200 | San Diego | 92154 | San Diego | -117.0723177 | 32.5717846 | 22.40 | 43.94 | 40-45% | No | 0.038 |
| 6097150601 | 4089 | Sonoma | 94954 | Petaluma | -122.6132539 | 38.2376164 | 22.40 | 43.93 | 40-45% | No | 0.033 |
| 6007002602 | 3455 | Butte | 95966 | Oroville | -121.4669098 | 39.5302628 | 22.39 | 43.91 | 40-45% | No | 0.053 |
| 6037135113 | 2795 | Los Angeles | 91367 | Woodland Hills | -118.6059583 | 34.1810129 | 22.39 | 43.90 | 40-45% | No | 0.057 |
| 6065042214 | 6316 | Riverside | 92557 | Moreno Valley | -117.2917944 | 33.9794836 | 22.39 | 43.89 | 40-45% | No | 0.065 |
| 6001431200 | 5627 | Alameda | 94546 | Castro Valley | -122.0836768 | 37.6855718 | 22.39 | 43.88 | 40-45% | No | 0.033 |
| 6073008600 | 6864 | San Diego | 92111 | San Diego | -117.1779398 | 32.7908268 | 22.39 | 43.86 | 40-45% | No | 0.042 |
| 6073015404 | 7626 | San Diego | 92020 | El Cajon | -116.9383632 | 32.78024 | 22.39 | 43.85 | 40-45% | No | 0.046 |
| 6073013401 | 4203 | San Diego | 91910 | Chula Vista | -117.0562074 | 32.6353409 | 22.39 | 43.84 | 40-45% | No | 0.040 |
| 6107002700 | 5615 | Tulare | 93265 | Springville | -118.4920872 | 36.1727771 | 22.38 | 43.83 | 40-45% | No | 0.065 |
| 6001422900 | 4336 | Alameda | 94704 | Berkeley | -122.269247 | 37.8678899 | 22.38 | 43.81 | 40-45% | No | 0.030 |
| 6073018906 | 6033 | San Diego | 92028 | Fallbrook | -117.2433431 | 33.3601098 | 22.37 | 43.80 | 40-45% | No | 0.050 |
| 6053010605 | 4219 | Monterey | 93905 | Salinas | -121.5991739 | 36.6886905 | 22.36 | 43.79 | 40-45% | No | 0.033 |
| 6065042003 | 5525 | Riverside | 92504 | Riverside | -117.3647054 | 33.870618 | 22.35 | 43.78 | 40-45% | No | 0.062 |
| 6019005509 | 4678 | Fresno | 93611 | Clovis | -119.7386631 | 36.8448439 | 22.34 | 43.76 | 40-45% | No | 0.065 |
| 6007003502 | 4758 | Butte | 95948 | Gridley | -121.7897864 | 39.3257871 | 22.34 | 43.75 | 40-45% | No | 0.050 |
| 6085502101 | 4798 | Santa Clara | 95128 | San Jose | -121.9360396 | 37.3059812 | 22.30 | 43.74 | 40-45% | No | 0.038 |
| 6073018904 | 5640 | San Diego | 92028 | Fallbrook | -117.2415252 | 33.381264 | 22.30 | 43.73 | 40-45% | No | 0.050 |
| 6037702300 | 6364 | Los Angeles | 90405 | Santa Monica | -118.4559535 | 34.0183122 | 22.30 | 43.71 | 40-45% | No | 0.046 |
| 6037480400 | 5654 | Los Angeles | 91801 | Alhambra | -118.1321698 | 34.1039997 | 22.30 | 43.70 | 40-45% | No | 0.051 |
| 6013313203 | 3222 | Contra Costa | 94565 | Pittsburg | -121.9161635 | 38.0037978 | 22.29 | 43.69 | 40-45% | No | 0.038 |
| 6065043227 | 7051 | Riverside | 92595 | Wildomar | -117.2249199 | 33.5912112 | 22.29 | 43.68 | 40-45% | No | 0.057 |
| 6073018400 | 3566 | San Diego | 92054 | Oceanside | -117.3796249 | 33.1990594 | 22.29 | 43.66 | 40-45% | No | 0.042 |
| 6113010901 | 5311 | Yolo | 95695 | Woodland | -121.788541 | 38.6884254 | 22.28 | 43.65 | 40-45% | No | 0.046 |
| 6019005911 | 3386 | Fresno | 93619 | Clovis | -119.6500718 | 36.7942655 | 22.28 | 43.64 | 40-45% | No | 0.065 |
| 6001440334 | 4016 | Alameda | 94587 | Union City | -122.0648512 | 37.5937913 | 22.28 | 43.62 | 40-45% | No | 0.035 |
| 6059032027 | 6328 | Orange | 92630 | Lake Forest | -117.6812546 | 33.6288846 | 22.27 | 43.61 | 40-45% | No | 0.050 |
| 6111008401 | 5308 | Ventura | 93063 | Simi Valley | -118.7065603 | 34.2871063 | 22.27 | 43.60 | 40-45% | No | 0.055 |
| 6077004800 | 5423 | San Joaquin | 95236 | Linden | -121.0367254 | 37.9808776 | 22.26 | 43.59 | 40-45% | No | 0.050 |
| 6085512026 | 3871 | Santa Clara | 95123 | San Jose | -121.8376934 | 37.2583713 | 22.25 | 43.57 | 40-45% | No | 0.038 |
| 6097153103 | 4716 | Sonoma | 95407 | Santa Rosa | -122.7341732 | 38.4198167 | 22.24 | 43.56 | 40-45% | No | 0.030 |
| 6079010603 | 1287 | San Luis Obispo | 93442 | Morro Bay | -120.8297441 | 35.374148 | 22.23 | 43.55 | 40-45% | No | 0.035 |
| 6089010400 | 4417 | Shasta | 96001 | Redding | -122.3786783 | 40.5512553 | 22.23 | 43.54 | 40-45% | No | 0.042 |
| 6085501300 | 4153 | Santa Clara | 95112 | San Jose | -121.8745424 | 37.3387146 | 22.23 | 43.52 | 40-45% | No | 0.035 |
| 6029005508 | 4198 | Kern | 93505 | California City | -118.007949 | 35.1220493 | 22.23 | 43.51 | 40-45% | No | 0.065 |
| 6095252610 | 3142 | Solano | 94533 | Fairfield | -122.0064188 | 38.270075 | 22.23 | 43.50 | 40-45% | No | 0.040 |
| 6071000117 | 6959 | San Bernardino | 91709 | Chino Hills | -117.7592802 | 33.9779999 | 22.22 | 43.49 | 40-45% | No | 0.055 |
| 6059110111 | 5736 | Orange | 90630 | Cypress | -118.052434 | 33.834964 | 22.22 | 43.47 | 40-45% | No | 0.044 |
| 6111000800 | 7788 | Ventura | 93060 | Santa Paula | -119.1192691 | 34.3846679 | 22.22 | 43.46 | 40-45% | No | 0.048 |
| 6049000100 | 3518 | Modoc | 96101 | Alturas | -120.553921 | 41.5074223 | 22.22 | 43.45 | 40-45% | No | 0.048 |
| 6075012000 | 3833 | San Francisco | 94109 | San Francisco | -122.4185205 | 37.7879651 | 22.21 | 43.44 | 40-45% | No | 0.030 |
| 6037275400 | 3349 | Los Angeles | 90066 | Los Angeles | -118.4391729 | 33.9906137 | 22.21 | 43.42 | 40-45% | No | 0.046 |
| 6111005202 | 2694 | Ventura | 93066 | Somis | -119.0253426 | 34.2547611 | 22.20 | 43.41 | 40-45% | No | 0.046 |
| 6053011203 | 7173 | Monterey | 93927 | Greenfield | -121.244738 | 36.3177202 | 22.20 | 43.40 | 40-45% | No | 0.042 |
| 6019004213 | 3248 | Fresno | 93711 | Fresno | -119.8507497 | 36.8185876 | 22.19 | 43.39 | 40-45% | No | 0.062 |
| 6093000702 | 4406 | Siskiyou | 96097 | Yreka | -122.6201917 | 41.7321698 | 22.18 | 43.37 | 40-45% | No | 0.044 |
| 6075010600 | 3894 | San Francisco | 94133 | San Francisco | -122.4063879 | 37.7993784 | 22.17 | 43.36 | 40-45% | No | 0.030 |
| 6001442302 | 4788 | Alameda | 94538 | Fremont | -121.9600524 | 37.5362999 | 22.17 | 43.35 | 40-45% | No | 0.035 |
| 6059110201 | 7483 | Orange | 90620 | Buena Park | -118.0152589 | 33.8355687 | 22.16 | 43.33 | 40-45% | No | 0.046 |
| 6037301100 | 6491 | Los Angeles | 91207 | Glendale | -118.2471275 | 34.1622943 | 22.16 | 43.32 | 40-45% | No | 0.051 |
| 6073015704 | 4024 | San Diego | 92019 | El Cajon | -116.9381289 | 32.7909112 | 22.16 | 43.31 | 40-45% | No | 0.046 |
| 6059001707 | 7482 | Orange | 92833 | Fullerton | -117.9681585 | 33.9046924 | 22.15 | 43.30 | 40-45% | No | 0.046 |
| 6083001101 | 4738 | Santa Barbara | 93101 | Santa Barbara | -119.7211598 | 34.4203889 | 22.14 | 43.28 | 40-45% | No | 0.040 |
| 6065043802 | 5116 | Riverside | 92320 | Calimesa | -117.0457708 | 33.9948779 | 22.14 | 43.27 | 40-45% | No | 0.068 |
| 6037554515 | 3703 | Los Angeles | 90703 | Cerritos | -118.0774113 | 33.8520795 | 22.13 | 43.26 | 40-45% | No | 0.044 |
| 6019005510 | 4997 | Fresno | 93720 | Fresno | -119.7567304 | 36.8446786 | 22.13 | 43.25 | 40-45% | No | 0.065 |
| 6071009119 | 5729 | San Bernardino | 92371 | Phelan | -117.4555858 | 34.4239769 | 22.13 | 43.23 | 40-45% | No | 0.065 |
| 6067008111 | 6153 | Sacramento | 95621 | Citrus Heights | -121.3002372 | 38.6991351 | 22.13 | 43.22 | 40-45% | No | 0.053 |
| 6065042008 | 7082 | Riverside | 92503 | Riverside | -117.4099689 | 33.848967 | 22.12 | 43.21 | 40-45% | No | 0.062 |
| 6111002700 | 3881 | Ventura | 93003 | Ventura | -119.2416995 | 34.2706551 | 22.12 | 43.20 | 40-45% | No | 0.044 |
| 6081610700 | 5207 | San Mateo | 94061 | Redwood City | -122.2190386 | 37.4698505 | 22.11 | 43.18 | 40-45% | No | 0.033 |
| 6067008912 | 3100 | Sacramento | 95670 | Rancho Cordova | -121.2735962 | 38.6249139 | 22.10 | 43.17 | 40-45% | No | 0.053 |
| 6037570003 | 4447 | Los Angeles | 90712 | Lakewood | -118.1402363 | 33.8646013 | 22.10 | 43.16 | 40-45% | No | 0.044 |
| 6085503327 | 4712 | Santa Clara | 95121 | San Jose | -121.7887699 | 37.3079908 | 22.09 | 43.15 | 40-45% | No | 0.038 |
| 6037273300 | 3695 | Los Angeles | 90291 | Venice | -118.4722036 | 33.9955518 | 22.08 | 43.13 | 40-45% | No | 0.046 |
| 6037139200 | 5175 | Los Angeles | 91316 | Encino | -118.5246447 | 34.1756962 | 22.07 | 43.12 | 40-45% | No | 0.060 |
| 6037900900 | 3813 | Los Angeles | 93536 | Lancaster | -118.2290789 | 34.7694996 | 22.07 | 43.11 | 40-45% | No | 0.062 |
| 6037900803 | 8284 | Los Angeles | 93534 | Lancaster | -118.1569902 | 34.7127561 | 22.06 | 43.09 | 40-45% | No | 0.062 |
| 6059110104 | 6024 | Orange | 90630 | Cypress | -118.0414924 | 33.8254171 | 22.04 | 43.08 | 40-45% | No | 0.044 |
| 6071000817 | 3264 | San Bernardino | 91786 | Upland | -117.6834894 | 34.1139306 | 22.04 | 43.07 | 40-45% | No | 0.062 |
| 6095252704 | 5155 | Solano | 94585 | Suisun City | -122.014721 | 38.2490976 | 22.04 | 43.06 | 40-45% | No | 0.040 |
| 6037910002 | 7217 | Los Angeles | 93543 | Littlerock | -117.9074722 | 34.5346329 | 22.04 | 43.04 | 40-45% | No | 0.062 |
| 6085505007 | 4083 | Santa Clara | 95054 | Santa Clara | -121.9480576 | 37.3851853 | 22.03 | 43.03 | 40-45% | No | 0.035 |
| 6073003212 | 4053 | San Diego | 92139 | San Diego | -117.0537791 | 32.6696208 | 22.02 | 43.02 | 40-45% | No | 0.040 |
| 6067007208 | 4495 | Sacramento | 95673 | Rio Linda | -121.4661875 | 38.6838883 | 22.02 | 43.01 | 40-45% | No | 0.050 |
| 6037555202 | 3399 | Los Angeles | 90808 | Long Beach | -118.0728449 | 33.8200771 | 22.01 | 42.99 | 40-45% | No | 0.044 |
| 6053011400 | 3778 | Monterey | 93426 | Bradley | -120.9172021 | 35.9668581 | 22.00 | 42.98 | 40-45% | No | 0.040 |
| 6073003109 | 3358 | San Diego | 92114 | San Diego | -117.0556229 | 32.6918459 | 21.99 | 42.97 | 40-45% | No | 0.040 |
| 6037143100 | 3984 | Los Angeles | 91602 | North Hollywood | -118.3559057 | 34.1480353 | 21.98 | 42.96 | 40-45% | No | 0.053 |
| 6037408724 | 5362 | Los Angeles | 91748 | Rowland Heights | -117.9033277 | 33.9841386 | 21.97 | 42.94 | 40-45% | No | 0.050 |
| 6095252316 | 3427 | Solano | 94533 | Fairfield | -122.0156731 | 38.2762632 | 21.96 | 42.93 | 40-45% | No | 0.040 |
| 6001437800 | 4621 | Alameda | 94544 | Hayward | -122.0686965 | 37.6431464 | 21.94 | 42.92 | 40-45% | No | 0.035 |
| 6065043211 | 5486 | Riverside | 92563 | Murrieta | -117.1737474 | 33.5646444 | 21.94 | 42.91 | 40-45% | No | 0.057 |
| 6085512027 | 4085 | Santa Clara | 95123 | San Jose | -121.854143 | 37.2544152 | 21.94 | 42.89 | 40-45% | No | 0.038 |
| 6037401602 | 5282 | Los Angeles | 91750 | La Verne | -117.7639908 | 34.1060815 | 21.92 | 42.88 | 40-45% | No | 0.060 |
| 6037651002 | 4606 | Los Angeles | 90501 | Torrance | -118.3240449 | 33.813981 | 21.92 | 42.87 | 40-45% | No | 0.042 |
| 6065043276 | 3620 | Riverside | 92595 | Wildomar | -117.231215 | 33.6075991 | 21.91 | 42.86 | 40-45% | No | 0.057 |
| 6037273502 | 2884 | Los Angeles | 90291 | Venice | -118.472226 | 33.9867153 | 21.90 | 42.84 | 40-45% | No | 0.046 |
| 6071010423 | 3786 | San Bernardino | 92285 | Landers | -116.4273958 | 34.2871102 | 21.90 | 42.83 | 40-45% | No | 0.065 |
| 6073002302 | 6589 | San Diego | 92105 | San Diego | -117.0963988 | 32.7525425 | 21.89 | 42.82 | 40-45% | No | 0.040 |
| 6067009321 | 5573 | Sacramento | 95828 | Sacramento | -121.3889372 | 38.4601632 | 21.88 | 42.80 | 40-45% | No | 0.050 |
| 6065049400 | 2978 | Riverside | 92203 | Indio | -116.2675281 | 33.7597156 | 21.85 | 42.79 | 40-45% | No | 0.062 |
| 6081613501 | 4141 | San Mateo | 94019 | Half Moon Bay | -122.4241365 | 37.5392774 | 21.85 | 42.78 | 40-45% | No | 0.033 |
| 6037115201 | 6437 | Los Angeles | 91324 | Northridge | -118.5382749 | 34.2441108 | 21.85 | 42.77 | 40-45% | No | 0.060 |
| 6065043254 | 5011 | Riverside | 92590 | Temecula | -117.1560638 | 33.4549695 | 21.84 | 42.75 | 40-45% | No | 0.055 |
| 6073018905 | 6765 | San Diego | 92028 | Fallbrook | -117.2431854 | 33.3720233 | 21.83 | 42.74 | 40-45% | No | 0.050 |
| 6111003612 | 4355 | Ventura | 93035 | Oxnard | -119.4256973 | 34.0110019 | 21.83 | 42.73 | 40-45% | No | 0.044 |
| 6085506401 | 4380 | Santa Clara | 95128 | San Jose | -121.9452892 | 37.3163751 | 21.83 | 42.72 | 40-45% | No | 0.035 |
| 6001405200 | 4597 | Alameda | 94606 | Oakland | -122.2433878 | 37.8052604 | 21.82 | 42.70 | 40-45% | No | 0.030 |
| 6073003101 | 3785 | San Diego | 92114 | San Diego | -117.0801318 | 32.6994123 | 21.81 | 42.69 | 40-45% | No | 0.040 |
| 6019005802 | 4195 | Fresno | 93611 | Clovis | -119.6727835 | 36.8001728 | 21.81 | 42.68 | 40-45% | No | 0.065 |
| 6037403500 | 1628 | Los Angeles | 91724 | Covina | -117.8519093 | 34.0625659 | 21.81 | 42.67 | 40-45% | No | 0.055 |
| 6037186203 | 2936 | Los Angeles | 90065 | Los Angeles | -118.2153417 | 34.1150031 | 21.80 | 42.65 | 40-45% | No | 0.048 |
| 6009000120 | 4434 | Calaveras | 95228 | Copperopolis | -120.6736779 | 37.9756396 | 21.79 | 42.64 | 40-45% | No | 0.053 |
| 6037272201 | 2411 | Los Angeles | 90066 | Los Angeles | -118.4341265 | 34.0003832 | 21.79 | 42.63 | 40-45% | No | 0.046 |
| 6037651221 | 3291 | Los Angeles | 90505 | Torrance | -118.3550066 | 33.8218914 | 21.78 | 42.62 | 40-45% | No | 0.042 |
| 6067008138 | 3568 | Sacramento | 95610 | Citrus Heights | -121.2781931 | 38.6711638 | 21.78 | 42.60 | 40-45% | No | 0.053 |
| 6023011100 | 4976 | Humboldt | 95565 | Scotia | -124.055087 | 40.440735 | 21.77 | 42.59 | 40-45% | No | 0.030 |
| 6037620002 | 3609 | Los Angeles | 90245 | El Segundo | -118.4041547 | 33.9200287 | 21.77 | 42.58 | 40-45% | No | 0.044 |
| 6059075701 | 6879 | Orange | 92705 | Santa Ana | -117.8278543 | 33.7667021 | 21.77 | 42.57 | 40-45% | No | 0.048 |
| 6007000502 | 4204 | Butte | 95926 | Chico | -121.8617233 | 39.7297355 | 21.77 | 42.55 | 40-45% | No | 0.048 |
| 6097150611 | 4067 | Sonoma | 94954 | Petaluma | -122.579047 | 38.2329343 | 21.75 | 42.54 | 40-45% | No | 0.033 |
| 6059099203 | 6029 | Orange | 92704 | Santa Ana | -117.9417386 | 33.737867 | 21.74 | 42.53 | 40-45% | No | 0.046 |
| 6067007015 | 4997 | Sacramento | 95834 | Sacramento | -121.5509593 | 38.648951 | 21.74 | 42.51 | 40-45% | No | 0.048 |
| 6081600700 | 7568 | San Mateo | 94014 | Daly City | -122.4640012 | 37.7052459 | 21.74 | 42.50 | 40-45% | No | 0.030 |
| 6083002210 | 6035 | Santa Barbara | 93454 | Santa Maria | -120.4186966 | 34.9705531 | 21.74 | 42.49 | 40-45% | No | 0.035 |
| 6021010501 | 3456 | Glenn | 95963 | Orland | -122.0413986 | 39.7212958 | 21.74 | 42.48 | 40-45% | No | 0.048 |
| 6073003112 | 4574 | San Diego | 92114 | San Diego | -117.0628402 | 32.7058788 | 21.74 | 42.46 | 40-45% | No | 0.040 |
| 6059075505 | 3599 | Orange | 92780 | Tustin | -117.8247177 | 33.7440129 | 21.69 | 42.45 | 40-45% | No | 0.048 |
| 6037463602 | 5051 | Los Angeles | 91105 | Pasadena | -118.1458929 | 34.1408046 | 21.69 | 42.44 | 40-45% | No | 0.051 |
| 6037273800 | 3107 | Los Angeles | 90291 | Venice | -118.4512626 | 33.9927102 | 21.68 | 42.43 | 40-45% | No | 0.046 |
| 6033000400 | 5574 | Lake | 95453 | Lakeport | -122.9155905 | 39.050958 | 21.68 | 42.41 | 40-45% | No | 0.042 |
| 6059063803 | 4437 | Orange | 92627 | Costa Mesa | -117.9411674 | 33.6642944 | 21.68 | 42.40 | 40-45% | No | 0.044 |
| 6001437900 | 2338 | Alameda | 94544 | Hayward | -122.0613101 | 37.6428259 | 21.67 | 42.39 | 40-45% | No | 0.035 |
| 6059052517 | 10096 | Orange | 92618 | Irvine | -117.7750436 | 33.6725059 | 21.66 | 42.38 | 40-45% | No | 0.048 |
| 6067008117 | 2084 | Sacramento | 95608 | Carmichael | -121.3188938 | 38.6652577 | 21.65 | 42.36 | 40-45% | No | 0.051 |
| 6095251300 | 2938 | Solano | 94590 | Vallejo | -122.235826 | 38.1146854 | 21.64 | 42.35 | 40-45% | No | 0.035 |
| 6037135111 | 2967 | Los Angeles | 91303 | Canoga Park | -118.6102388 | 34.1924609 | 21.64 | 42.34 | 40-45% | No | 0.057 |
| 6059021913 | 8140 | Orange | 92869 | Orange | -117.8074249 | 33.7979555 | 21.64 | 42.33 | 40-45% | No | 0.048 |
| 6037141102 | 2869 | Los Angeles | 91423 | Sherman Oaks | -118.4318823 | 34.1494929 | 21.64 | 42.31 | 40-45% | No | 0.053 |
| 6081607600 | 3342 | San Mateo | 94402 | San Mateo | -122.3066909 | 37.5581392 | 21.63 | 42.30 | 40-45% | No | 0.033 |
| 6073020306 | 8694 | San Diego | 92078 | San Marcos | -117.1487018 | 33.1112121 | 21.63 | 42.29 | 40-45% | No | 0.046 |
| 6001444400 | 5114 | Alameda | 94560 | Newark | -122.0353376 | 37.5362317 | 21.63 | 42.28 | 40-45% | No | 0.035 |
| 6085500400 | 2369 | Santa Clara | 95126 | San Jose | -121.9220533 | 37.3401731 | 21.62 | 42.26 | 40-45% | No | 0.035 |
| 6013317000 | 2144 | Contra Costa | 94553 | Martinez | -122.1262172 | 38.0176872 | 21.61 | 42.25 | 40-45% | No | 0.035 |
| 6037503901 | 2702 | Los Angeles | 90638 | La Mirada | -118.0068471 | 33.8897905 | 21.60 | 42.24 | 40-45% | No | 0.046 |
| 6071009118 | 22862 | San Bernardino | 92392 | Victorville | -117.4288837 | 34.4864967 | 21.60 | 42.22 | 40-45% | No | 0.065 |
| 6111007000 | 3907 | Ventura | 91360 | Thousand Oaks | -118.867895 | 34.1816985 | 21.59 | 42.21 | 40-45% | No | 0.048 |
| 6073006802 | 5032 | San Diego | 92106 | San Diego | -117.218481 | 32.7501717 | 21.58 | 42.20 | 40-45% | No | 0.040 |
| 6065044701 | 3555 | Riverside | 92262 | Palm Springs | -116.5194219 | 33.8231858 | 21.58 | 42.19 | 40-45% | No | 0.068 |
| 6083002011 | 5317 | Santa Barbara | 93455 | Santa Maria | -120.4616815 | 34.9053343 | 21.56 | 42.17 | 40-45% | No | 0.035 |
| 6085504414 | 5092 | Santa Clara | 95035 | Milpitas | -121.8969311 | 37.4399072 | 21.55 | 42.16 | 40-45% | No | 0.038 |
| 6065042740 | 2017 | Riverside | 92586 | Sun City | -117.1977569 | 33.7251015 | 21.55 | 42.15 | 40-45% | No | 0.062 |
| 6065042411 | 2540 | Riverside | 92557 | Moreno Valley | -117.2371448 | 33.967321 | 21.55 | 42.14 | 40-45% | No | 0.065 |
| 6067007427 | 6840 | Sacramento | 95843 | Antelope | -121.37028 | 38.707515 | 21.51 | 42.12 | 40-45% | No | 0.051 |
| 6059099605 | 3690 | Orange | 92647 | Huntington Beach | -118.0079541 | 33.735963 | 21.51 | 42.11 | 40-45% | No | 0.044 |
| 6029006008 | 5956 | Kern | 93561 | Tehachapi | -118.6581798 | 35.1962215 | 21.51 | 42.10 | 40-45% | No | 0.065 |
| 6085505600 | 3880 | Santa Clara | 95050 | Santa Clara | -121.9459448 | 37.350955 | 21.50 | 42.09 | 40-45% | No | 0.035 |
| 6037702502 | 4048 | Los Angeles | 90232 | Culver City | -118.3858998 | 34.0125885 | 21.50 | 42.07 | 40-45% | No | 0.046 |
| 6081606300 | 4073 | San Mateo | 94402 | San Mateo | -122.3193435 | 37.5653475 | 21.50 | 42.06 | 40-45% | No | 0.033 |
| 6059099241 | 4274 | Orange | 92683 | Westminster | -117.9802241 | 33.7264094 | 21.50 | 42.05 | 40-45% | No | 0.044 |
| 6065044505 | 6479 | Riverside | 92276 | Thousand Palms | -116.3874271 | 33.8211956 | 21.49 | 42.04 | 40-45% | No | 0.068 |
| 6059063906 | 6591 | Orange | 92626 | Costa Mesa | -117.9028423 | 33.6609028 | 21.49 | 42.02 | 40-45% | No | 0.044 |
| 6061021304 | 5307 | Placer | 95648 | Lincoln | -121.283873 | 38.9695759 | 21.48 | 42.01 | 40-45% | No | 0.053 |
| 6037701502 | 3841 | Los Angeles | 90404 | Santa Monica | -118.4872348 | 34.0254597 | 21.47 | 42.00 | 40-45% | No | 0.046 |
| 6045010900 | 4332 | Mendocino | 95470 | Redwood Valley | -123.3726489 | 39.2578856 | 21.46 | 41.99 | 40-45% | No | 0.038 |
| 6037800328 | 2640 | Los Angeles | 91301 | Agoura Hills | -118.7172726 | 34.153247 | 21.45 | 41.97 | 40-45% | No | 0.053 |
| 6095252305 | 4711 | Solano | 94534 | Fairfield | -122.0937986 | 38.2199882 | 21.45 | 41.96 | 40-45% | No | 0.038 |
| 6037271701 | 5850 | Los Angeles | 90034 | Los Angeles | -118.4192255 | 34.027115 | 21.44 | 41.95 | 40-45% | No | 0.046 |
| 6071011206 | 995 | San Bernardino | 92315 | Big Bear Lake | -116.9467039 | 34.2409525 | 21.44 | 41.93 | 40-45% | No | 0.068 |
| 6001441503 | 5389 | Alameda | 94560 | Newark | -121.9444248 | 37.4731786 | 21.44 | 41.92 | 40-45% | No | 0.035 |
| 6011000400 | 2495 | Colusa | 95979 | Stonyford | -122.4155716 | 39.2881333 | 21.43 | 41.91 | 40-45% | No | 0.046 |
| 6037920112 | 4287 | Los Angeles | 91354 | Valencia | -118.5391687 | 34.4354255 | 21.42 | 41.90 | 40-45% | No | 0.065 |
| 6073016902 | 2341 | San Diego | 92040 | Lakeside | -116.8538493 | 32.9312875 | 21.41 | 41.88 | 40-45% | No | 0.050 |
| 6037670002 | 4001 | Los Angeles | 90717 | Lomita | -118.3132363 | 33.7944957 | 21.41 | 41.87 | 40-45% | No | 0.042 |
| 6037503402 | 4273 | Los Angeles | 90603 | Whittier | -118.0008226 | 33.941836 | 21.40 | 41.86 | 40-45% | No | 0.046 |
| 6075031400 | 6676 | San Francisco | 94112 | San Francisco | -122.4571446 | 37.7147206 | 21.40 | 41.85 | 40-45% | No | 0.030 |
| 6067009403 | 2038 | Sacramento | 95693 | Wilton | -121.2760218 | 38.3451903 | 21.39 | 41.83 | 40-45% | No | 0.048 |
| 6085503902 | 5440 | Santa Clara | 95127 | San Jose | -121.8283233 | 37.3735434 | 21.38 | 41.82 | 40-45% | No | 0.038 |
| 6075033201 | 3683 | San Francisco | 94132 | San Francisco | -122.4796588 | 37.726265 | 21.38 | 41.81 | 40-45% | No | 0.030 |
| 6065042745 | 4614 | Riverside | 92567 | Nuevo | -117.0632869 | 33.778279 | 21.37 | 41.80 | 40-45% | No | 0.065 |
| 6099000504 | 8692 | Stanislaus | 95356 | Modesto | -121.038906 | 37.6996863 | 21.37 | 41.78 | 40-45% | No | 0.053 |
| 6073008505 | 5605 | San Diego | 92117 | San Diego | -117.1850238 | 32.8402976 | 21.36 | 41.77 | 40-45% | No | 0.044 |
| 6071007306 | 5859 | San Bernardino | 92354 | Loma Linda | -117.2380005 | 34.0549636 | 21.35 | 41.76 | 40-45% | No | 0.068 |
| 6059021815 | 7751 | Orange | 92823 | Brea | -117.8147284 | 33.9272688 | 21.35 | 41.75 | 40-45% | No | 0.051 |
| 6037401304 | 5642 | Los Angeles | 91773 | San Dimas | -117.8147951 | 34.088083 | 21.34 | 41.73 | 40-45% | No | 0.057 |
| 6001436401 | 7042 | Alameda | 94541 | Hayward | -122.0650918 | 37.6715227 | 21.34 | 41.72 | 40-45% | No | 0.035 |
| 6037461400 | 3204 | Los Angeles | 91104 | Pasadena | -118.1246769 | 34.1723185 | 21.33 | 41.71 | 40-45% | No | 0.051 |
| 6111008101 | 3433 | Ventura | 93065 | Simi Valley | -118.738939 | 34.2764924 | 21.32 | 41.70 | 40-45% | No | 0.055 |
| 6037461700 | 1385 | Los Angeles | 91103 | Pasadena | -118.1655566 | 34.1583127 | 21.32 | 41.68 | 40-45% | No | 0.051 |
| 6065042013 | 8333 | Riverside | 92508 | Riverside | -117.3019318 | 33.8944124 | 21.30 | 41.67 | 40-45% | No | 0.065 |
| 6037574902 | 4783 | Los Angeles | 90815 | Long Beach | -118.1378391 | 33.7913432 | 21.28 | 41.66 | 40-45% | No | 0.042 |
| 6067007433 | 7656 | Sacramento | 95843 | Antelope | -121.3557412 | 38.7117767 | 21.28 | 41.64 | 40-45% | No | 0.051 |
| 6087110700 | 3357 | Santa Cruz | 95076 | Watsonville | -121.7939493 | 36.9384816 | 21.27 | 41.63 | 40-45% | No | 0.038 |
| 6073012800 | 3913 | San Diego | 91910 | Chula Vista | -117.0709931 | 32.6358462 | 21.27 | 41.62 | 40-45% | No | 0.040 |
| 6001440306 | 3841 | Alameda | 94587 | Union City | -122.0683607 | 37.5849858 | 21.27 | 41.61 | 40-45% | No | 0.035 |
| 6013387000 | 2532 | Contra Costa | 94530 | El Cerrito | -122.3059348 | 37.917033 | 21.26 | 41.59 | 40-45% | No | 0.030 |
| 6037300502 | 6026 | Los Angeles | 91020 | Montrose | -118.2257027 | 34.2110063 | 21.25 | 41.58 | 40-45% | No | 0.053 |
| 6101050601 | 6029 | Sutter | 95993 | Yuba City | -121.6796539 | 39.1627684 | 21.25 | 41.57 | 40-45% | No | 0.048 |
| 6059042307 | 6900 | Orange | 92653 | Laguna Hills | -117.6918661 | 33.5987661 | 21.25 | 41.56 | 40-45% | No | 0.050 |
| 6053000702 | 6371 | Monterey | 93905 | Salinas | -121.6108778 | 36.6846397 | 21.25 | 41.54 | 40-45% | No | 0.033 |
| 6077004704 | 4894 | San Joaquin | 95240 | Lodi | -121.0464269 | 38.106309 | 21.25 | 41.53 | 40-45% | No | 0.050 |

| | | | | | | | | | |
|---|---|---|---|---|---|---|---|---|---|
| 6073020602 | 5859 | San Diego | 92025 | Escondido | -117.0681038 | 33.1189678 | 21.24 | 41.52 | 40-45% | No |
| 6001451101 | 7081 | Alameda | 94550 | Livermore | -121.6633595 | 37.6396925 | 21.24 | 41.51 | 40-45% | No |
| 6007002700 | 5478 | Butte | 95966 | Oroville | -121.5269455 | 39.5228652 | 21.24 | 41.49 | 40-45% | No |
| 6007002400 | 5157 | Butte | 95916 | Berry Creek | -121.3519555 | 39.6655389 | 21.23 | 41.48 | 40-45% | No |
| 6013318000 | 3267 | Contra Costa | 94553 | Martinez | -122.1663864 | 38.0165957 | 21.23 | 41.47 | 40-45% | No |
| 6001435300 | 4479 | Alameda | 94541 | Hayward | -122.064666 | 37.6807791 | 21.23 | 41.46 | 40-45% | No |
| 6037295103 | 4875 | Los Angeles | 90731 | San Pedro | -118.2962139 | 33.762648 | 21.22 | 41.44 | 40-45% | No |
| 6111004711 | 3432 | Ventura | 93033 | Oxnard | -119.163289 | 34.1679536 | 21.22 | 41.43 | 40-45% | No |
| 6037900608 | 3536 | Los Angeles | 93535 | Lancaster | -118.1081707 | 34.6968196 | 21.21 | 41.42 | 40-45% | No |
| 6071000819 | 5077 | San Bernardino | 91784 | Upland | -117.6325109 | 34.1262864 | 21.20 | 41.40 | 40-45% | No |
| 6001432200 | 4080 | Alameda | 94577 | San Leandro | -122.1562452 | 37.7330544 | 21.20 | 41.39 | 40-45% | No |
| 6037134423 | 3414 | Los Angeles | 91304 | Canoga Park | -118.6341913 | 34.2138397 | 21.20 | 41.38 | 40-45% | No |
| 6037920040 | 3352 | Los Angeles | 91387 | Canyon Country | -118.4274646 | 34.435608 | 21.20 | 41.37 | 40-45% | No |
| 6085501800 | 5085 | Santa Clara | 95125 | San Jose | -121.8970809 | 37.3163893 | 21.19 | 41.35 | 40-45% | No |
| 6037576602 | 3995 | Los Angeles | 90802 | Long Beach | -118.1714209 | 33.7631621 | 21.19 | 41.34 | 40-45% | No |
| 6065043807 | 5743 | Riverside | 92223 | Beaumont | -116.9737171 | 33.9591433 | 21.19 | 41.33 | 40-45% | No |
| 6029000908 | 5493 | Kern | 93306 | Bakersfield | -118.9414209 | 35.4021102 | 21.19 | 41.32 | 40-45% | No |
| 6045010300 | 4272 | Mendocino | 95437 | Fort Bragg | -123.638408 | 39.455171 | 21.19 | 41.30 | 40-45% | No |
| 6065042729 | 9184 | Riverside | 92584 | Menifee | -117.1657865 | 33.7037298 | 21.19 | 41.29 | 40-45% | No |
| 6037188201 | 3270 | Los Angeles | 90027 | Los Angeles | -118.2723964 | 34.1124175 | 21.18 | 41.28 | 40-45% | No |
| 6013313205 | 1724 | Contra Costa | 94565 | Pittsburg | -121.9168577 | 38.0162998 | 21.18 | 41.27 | 40-45% | No |
| 6013302009 | 5641 | Contra Costa | 94531 | Antioch | -121.7478856 | 37.9715128 | 21.17 | 41.25 | 40-45% | No |
| 6097150603 | 7249 | Sonoma | 94954 | Petaluma | -122.6179426 | 38.2544898 | 21.17 | 41.24 | 40-45% | No |
| 6037113101 | 3558 | Los Angeles | 91311 | Chatsworth | -118.5852975 | 34.2654115 | 21.17 | 41.23 | 40-45% | No |
| 6087110502 | 6088 | Santa Cruz | 95076 | Watsonville | -121.769617 | 36.9300262 | 21.16 | 41.22 | 40-45% | No |
| 6073008359 | 3975 | San Diego | 92126 | San Diego | -117.1204728 | 32.9103179 | 21.16 | 41.20 | 40-45% | No |
| 6073020028 | 3479 | San Diego | 92069 | San Marcos | -117.1700975 | 33.1418052 | 21.16 | 41.19 | 40-45% | No |
| 6037117301 | 3851 | Los Angeles | 91343 | North Hills | -118.4896512 | 34.2421587 | 21.16 | 41.18 | 40-45% | No |
| 6055201005 | 2418 | Napa | 94558 | Napa | -122.2872835 | 38.2049238 | 21.14 | 41.17 | 40-45% | No |
| 6037702501 | 4625 | Los Angeles | 90232 | Culver City | -118.3963576 | 34.0146198 | 21.13 | 41.15 | 40-45% | No |
| 6073013503 | 5776 | San Diego | 91977 | Spring Valley | -116.9812065 | 32.73925 | 21.13 | 41.14 | 40-45% | No |
| 6037503301 | 3394 | Los Angeles | 90603 | Whittier | -118.0151414 | 33.9480802 | 21.13 | 41.13 | 40-45% | No |
| 6065042739 | 7097 | Riverside | 92584 | Menifee | -117.1551086 | 33.6550902 | 21.13 | 41.11 | 40-45% | No |
| 6083001704 | 2565 | Santa Barbara | 93013 | Carpinteria | -119.4905106 | 34.3882739 | 21.13 | 41.10 | 40-45% | No |
| 6085502910 | 3656 | Santa Clara | 95118 | San Jose | -121.8839525 | 37.2515075 | 21.12 | 41.09 | 40-45% | No |
| 6059001503 | 5099 | Orange | 92821 | Brea | -117.908263 | 33.9153573 | 21.11 | 41.08 | 40-45% | No |
| 6075022803 | 4595 | San Francisco | 94110 | San Francisco | -122.4120842 | 37.7558368 | 21.11 | 41.06 | 40-45% | No |
| 6083002303 | 6765 | Santa Barbara | 93458 | Santa Maria | -120.4445191 | 34.9641603 | 21.11 | 41.05 | 40-45% | No |
| 6095250502 | 3128 | Solano | 94591 | Vallejo | -122.2038733 | 38.089461 | 21.09 | 41.04 | 40-45% | No |
| 6083001604 | 5190 | Santa Barbara | 93013 | Carpinteria | -119.5217962 | 34.3968141 | 21.09 | 41.03 | 40-45% | No |
| 6037800204 | 6740 | Los Angeles | 91302 | Calabasas | -118.6661486 | 34.1466066 | 21.08 | 41.01 | 40-45% | No |
| 6067008141 | 6799 | Sacramento | 95610 | Citrus Heights | -121.2813011 | 38.6841182 | 21.08 | 41.00 | 40-45% | No |
| 6037574202 | 2161 | Los Angeles | 90815 | Long Beach | -118.1432883 | 33.8018724 | 21.07 | 40.99 | 40-45% | No |
| 6059088202 | 3005 | Orange | 92840 | Garden Grove | -117.955544 | 33.795374 | 21.06 | 40.98 | 40-45% | No |
| 6075033204 | 3821 | San Francisco | 94132 | San Francisco | -122.4804118 | 37.7196259 | 21.06 | 40.96 | 40-45% | No |
| 6013339002 | 5574 | Contra Costa | 94596 | Walnut Creek | -122.0630149 | 37.9062665 | 21.06 | 40.95 | 40-45% | No |
| 6085512308 | 7006 | Santa Clara | 95037 | Morgan Hill | -121.6188759 | 37.1535256 | 21.06 | 40.94 | 40-45% | No |
| 6073019207 | 8416 | San Diego | 92084 | Vista | -117.2039111 | 33.2338179 | 21.05 | 40.93 | 40-45% | No |
| 6059052418 | 12096 | Orange | 92620 | Irvine | -117.755003 | 33.6919703 | 21.05 | 40.91 | 40-45% | No |
| 6073016503 | 2784 | San Diego | 92021 | El Cajon | -116.9554309 | 32.8220794 | 21.05 | 40.90 | 40-45% | No |
| 6037503702 | 5040 | Los Angeles | 90604 | Whittier | -117.9846208 | 33.9221904 | 21.05 | 40.89 | 40-45% | No |
| 6037432000 | 8182 | Los Angeles | 91780 | Temple City | -118.0547526 | 34.1023093 | 21.04 | 40.88 | 40-45% | No |
| 6029002807 | 3894 | Kern | 93309 | Bakersfield | -119.0825787 | 35.3457879 | 21.04 | 40.86 | 40-45% | No |
| 6007000700 | 4694 | Butte | 95926 | Chico | -121.8390356 | 39.7420778 | 21.01 | 40.85 | 40-45% | No |
| 6037900506 | 4352 | Los Angeles | 93535 | Lancaster | -118.1012713 | 34.681794 | 21.01 | 40.84 | 40-45% | No |
| 6073002905 | 4022 | San Diego | 92115 | San Diego | -117.0496451 | 32.7711381 | 21.00 | 40.82 | 40-45% | No |
| 6037430724 | 4812 | Los Angeles | 91007 | Arcadia | -118.0591183 | 34.127054 | 21.00 | 40.81 | 40-45% | No |
| 6037403406 | 2796 | Los Angeles | 91789 | Walnut | -117.8556711 | 34.0450793 | 21.00 | 40.80 | 40-45% | No |
| 6065043315 | 2073 | Riverside | 92544 | Hemet | -116.9264553 | 33.7338091 | 20.99 | 40.79 | 40-45% | No |
| 6037400403 | 3815 | Los Angeles | 91773 | San Dimas | -117.8007925 | 34.1467498 | 20.99 | 40.77 | 40-45% | No |
| 6059075506 | 3437 | Orange | 92780 | Tustin | -117.8072725 | 33.7419279 | 20.99 | 40.76 | 40-45% | No |
| 6037275311 | 4993 | Los Angeles | 90066 | Los Angeles | -118.4233089 | 33.9882746 | 20.98 | 40.75 | 40-45% | No |
| 6047001801 | 4288 | Merced | 95340 | Merced | -120.4372681 | 37.3461289 | 20.98 | 40.74 | 40-45% | No |
| 6073003202 | 4551 | San Diego | 92139 | San Diego | -117.0643688 | 32.6719721 | 20.97 | 40.72 | 40-45% | No |
| 6065042724 | 3182 | Riverside | 92584 | Menifee | -117.1494297 | 33.6962146 | 20.97 | 40.71 | 40-45% | No |
| 6097151900 | 3158 | Sonoma | 95404 | Santa Rosa | -122.7083509 | 38.43518 | 20.97 | 40.70 | 40-45% | No |
| 6001408400 | 3323 | Alameda | 94605 | Oakland | -122.1709595 | 37.7646056 | 20.97 | 40.69 | 40-45% | No |
| 6073008510 | 6626 | San Diego | 92111 | San Diego | -117.1629093 | 32.8083089 | 20.97 | 40.67 | 40-45% | No |
| 6019004303 | 4162 | Fresno | 93711 | Fresno | -119.8307726 | 36.8155701 | 20.96 | 40.66 | 40-45% | No |
| 6045010500 | 4439 | Mendocino | 95437 | Fort Bragg | -123.8014847 | 39.4312988 | 20.95 | 40.65 | 40-45% | No |
| 6059099508 | 4500 | Orange | 92649 | Huntington Beach | -118.0488803 | 33.7249161 | 20.95 | 40.64 | 40-45% | No |
| 6093000701 | 3755 | Siskiyou | 96097 | Yreka | -122.6745712 | 41.6608649 | 20.95 | 40.62 | 40-45% | No |
| 6085503804 | 4980 | Santa Clara | 95133 | San Jose | -121.8449069 | 37.3758853 | 20.94 | 40.61 | 40-45% | No |
| 6071002015 | 4777 | San Bernardino | 91701 | Rancho Cucamonga | -117.6071663 | 34.1271062 | 20.94 | 40.60 | 40-45% | No |
| 6001428500 | 3183 | Alameda | 94501 | Alameda | -122.2593887 | 37.7601324 | 20.93 | 40.59 | 40-45% | No |
| 6095250604 | 3842 | Solano | 94591 | Vallejo | -122.2185562 | 38.0673887 | 20.93 | 40.57 | 40-45% | No |
| 6085509202 | 4480 | Santa Clara | 94043 | Mountain View | -122.0838765 | 37.4059095 | 20.92 | 40.56 | 40-45% | No |
| 6037920042 | 6769 | Los Angeles | 91321 | Newhall | -118.4712318 | 34.3970565 | 20.92 | 40.55 | 40-45% | No |
| 6037273100 | 2197 | Los Angeles | 90291 | Venice | -118.4597985 | 34.0034867 | 20.91 | 40.53 | 40-45% | No |
| 6029003805 | 8774 | Kern | 93312 | Bakersfield | -119.1199953 | 35.4102215 | 20.91 | 40.52 | 40-45% | No |
| 6061020300 | 4520 | Placer | 95603 | Auburn | -121.0748502 | 38.9052966 | 20.90 | 40.51 | 40-45% | No |
| 6037267800 | 2917 | Los Angeles | 90064 | Los Angeles | -118.4306811 | 34.03958 | 20.89 | 40.50 | 40-45% | No |
| 6065044605 | 4803 | Riverside | 92262 | Palm Springs | -116.5474414 | 33.863302 | 20.89 | 40.48 | 40-45% | No |
| 6037296402 | 3091 | Los Angeles | 90732 | San Pedro | -118.3038543 | 33.7465608 | 20.89 | 40.47 | 40-45% | No |
| 6097151305 | 5405 | Sonoma | 94928 | Rohnert Park | -122.7067009 | 38.3433893 | 20.88 | 40.46 | 40-45% | No |
| 6085508601 | 3668 | Santa Clara | 94086 | Sunnyvale | -122.0409973 | 37.375919 | 20.88 | 40.45 | 40-45% | No |
| 6097152903 | 5114 | Sonoma | 95403 | Santa Rosa | -122.7481349 | 38.4573447 | 20.88 | 40.43 | 40-45% | No |
| 6001409700 | 4696 | Alameda | 94605 | Oakland | -122.1658929 | 37.7564187 | 20.87 | 40.42 | 40-45% | No |
| 6081610800 | 4721 | San Mateo | 94061 | Redwood City | -122.2260081 | 37.4700717 | 20.86 | 40.41 | 40-45% | No |
| 6037431002 | 3163 | Los Angeles | 91016 | Monrovia | -117.9843329 | 34.1447913 | 20.84 | 40.40 | 40-45% | No |
| 6071007404 | 4406 | San Bernardino | 92346 | Highland | -117.2065853 | 34.1432143 | 20.84 | 40.38 | 40-45% | No |
| 6065043220 | 4594 | Riverside | 92592 | Temecula | -117.1342075 | 33.5040499 | 20.83 | 40.37 | 40-45% | No |
| 6037920332 | 2337 | Los Angeles | 91321 | Newhall | -118.5139837 | 34.3831933 | 20.83 | 40.36 | 40-45% | No |
| 6037265700 | 4720 | Los Angeles | 90024 | Los Angeles | -118.4236856 | 34.0632 | 20.83 | 40.35 | 40-45% | No |
| 6075025900 | 4261 | San Francisco | 94134 | San Francisco | -122.4105033 | 37.7234533 | 20.82 | 40.33 | 40-45% | No |
| 6085508004 | 6090 | Santa Clara | 95014 | Cupertino | -122.0012583 | 37.3163812 | 20.82 | 40.32 | 40-45% | No |
| 6037113212 | 3069 | Los Angeles | 91311 | Chatsworth | -118.6024313 | 34.2606869 | 20.81 | 40.31 | 40-45% | No |
| 6073000800 | 4280 | San Diego | 92104 | San Diego | -117.1420277 | 32.7447819 | 20.81 | 40.30 | 40-45% | No |
| 6013308002 | 4194 | Contra Costa | 94531 | Antioch | -121.766535 | 37.9886736 | 20.81 | 40.28 | 40-45% | No |
| 6037570800 | 5540 | Los Angeles | 90712 | Lakewood | -118.1353409 | 33.8533032 | 20.79 | 40.27 | 40-45% | No |
| 6085512309 | 4996 | Santa Clara | 95037 | Morgan Hill | -121.6086139 | 37.1301031 | 20.78 | 40.26 | 40-45% | No |
| 6067009504 | 2059 | Sacramento | 95632 | Galt | -121.2976721 | 38.2470445 | 20.78 | 40.24 | 40-45% | No |
| 6075025500 | 8471 | San Francisco | 94112 | San Francisco | -122.4372627 | 37.7280611 | 20.77 | 40.23 | 40-45% | No |
| 6037111206 | 4490 | Los Angeles | 91326 | Porter Ranch | -118.5343557 | 34.2690645 | 20.75 | 40.22 | 40-45% | No |
| 6097150612 | 4325 | Sonoma | 94954 | Petaluma | -122.5331126 | 38.2110204 | 20.75 | 40.21 | 40-45% | No |
| 6037701000 | 5431 | Los Angeles | 90212 | Beverly Hills | -118.4057737 | 34.0618645 | 20.75 | 40.19 | 40-45% | No |
| 6037910202 | 5223 | Los Angeles | 93551 | Palmdale | -118.1750315 | 34.6286412 | 20.74 | 40.18 | 40-45% | No |
| 6101050503 | 6966 | Sutter | 95993 | Yuba City | -121.6618808 | 39.1198969 | 20.74 | 40.17 | 40-45% | No |
| 6013319000 | 7412 | Contra Costa | 94553 | Martinez | -122.1215423 | 38.0042221 | 20.73 | 40.16 | 40-45% | No |
| 6081601501 | 5063 | San Mateo | 94015 | Daly City | -122.485618 | 37.6750113 | 20.73 | 40.14 | 40-45% | No |
| 6073010004 | 4679 | San Diego | 92154 | San Diego | -117.0523008 | 32.5709007 | 20.72 | 40.13 | 40-45% | No |
| 6037650603 | 3958 | Los Angeles | 90503 | Torrance | -118.3697533 | 33.8441204 | 20.71 | 40.12 | 40-45% | No |
| 6085504412 | 4901 | Santa Clara | 95035 | Milpitas | -121.8818676 | 37.4394982 | 20.70 | 40.11 | 40-45% | No |
| 6065047000 | 1749 | Riverside | 92225 | Blythe | -114.5601089 | 33.6218613 | 20.70 | 40.09 | 40-45% | No |
| 6057000701 | 7436 | Nevada | 95959 | Nevada City | -120.875801 | 39.2304282 | 20.69 | 40.08 | 40-45% | No |
| 6059063807 | 4957 | Orange | 92626 | Costa Mesa | -117.9278881 | 33.6655719 | 20.68 | 40.07 | 40-45% | No |
| 6111004504 | 5389 | Ventura | 93033 | Oxnard | -119.1719507 | 34.1583225 | 20.67 | 40.06 | 40-45% | No |
| 6113011101 | 3070 | Yolo | 95695 | Woodland | -121.7701616 | 38.6701812 | 20.67 | 40.04 | 40-45% | No |
| 6073013301 | 5180 | San Diego | 91911 | Chula Vista | -117.0510608 | 32.623861 | 20.67 | 40.03 | 40-45% | No |
| 6095252703 | 3846 | Solano | 94585 | Suisun City | -122.0272609 | 38.2485857 | 20.67 | 40.02 | 40-45% | No |
| 6037274100 | 4418 | Los Angeles | 90292 | Marina del Rey | -118.4489221 | 33.9875224 | 20.66 | 40.01 | 40-45% | No |
| 6073001500 | 3934 | San Diego | 92104 | San Diego | -117.1233872 | 32.7437342 | 20.66 | 39.99 | 35-40% | No |
| 6001442400 | 6253 | Alameda | 94538 | Fremont | -121.9737794 | 37.5313805 | 20.65 | 39.98 | 35-40% | No |
| 6059052416 | 4006 | Orange | 92630 | Lake Forest | -117.6895288 | 33.6340547 | 20.65 | 39.97 | 35-40% | No |
| 6073016402 | 7452 | San Diego | 92021 | El Cajon | -116.9101919 | 32.8091378 | 20.65 | 39.95 | 35-40% | No |
| 6095253105 | 5958 | Solano | 95687 | Vacaville | -121.9670749 | 38.3539248 | 20.64 | 39.94 | 35-40% | No |
| 6073003107 | 5992 | San Diego | 92114 | San Diego | -117.0230027 | 32.7062651 | 20.63 | 39.93 | 35-40% | No |
| 6085504505 | 4418 | Santa Clara | 95035 | Milpitas | -121.902293 | 37.409121 | 20.63 | 39.92 | 35-40% | No |
| 6037403303 | 2523 | Los Angeles | 91789 | Walnut | -117.8593531 | 34.0024101 | 20.63 | 39.90 | 35-40% | No |
| 6037403319 | 4260 | Los Angeles | 91765 | Diamond Bar | -117.8117454 | 34.0088512 | 20.62 | 39.89 | 35-40% | No |
| 6037700501 | 3687 | Los Angeles | 90069 | West Hollywood | -118.3878271 | 34.0876356 | 20.62 | 39.88 | 35-40% | No |
| 6059063202 | 3556 | Orange | 92627 | Costa Mesa | -117.908706 | 33.6418496 | 20.62 | 39.87 | 35-40% | No |
| 6059032028 | 3102 | Orange | 92691 | Mission Viejo | -117.6770403 | 33.6244283 | 20.62 | 39.85 | 35-40% | No |
| 6067008010 | 4890 | Sacramento | 95628 | Fair Oaks | -121.2823391 | 38.6382215 | 20.62 | 39.84 | 35-40% | No |
| 6089012400 | 4100 | Shasta | 96047 | Igo | -122.6481015 | 40.5276578 | 20.61 | 39.83 | 35-40% | No |
| 6059110303 | 4986 | Orange | 90620 | Buena Park | -118.0109173 | 33.8428805 | 20.61 | 39.82 | 35-40% | No |
| 6085504323 | 5741 | Santa Clara | 95131 | San Jose | -121.8810857 | 37.3987983 | 20.60 | 39.80 | 35-40% | No |
| 6037650102 | 2248 | Los Angeles | 90504 | Torrance | -118.3325936 | 33.8697417 | 20.60 | 39.79 | 35-40% | No |
| 6059063805 | 2415 | Orange | 92626 | Costa Mesa | -117.9300508 | 33.6895819 | 20.60 | 39.78 | 35-40% | No |
| 6065050400 | 10378 | Riverside | 92562 | Murrieta | -117.187955 | 33.5863126 | 20.59 | 39.77 | 35-40% | No |
| 6059110108 | 2733 | Orange | 90720 | Los Alamitos | -118.0687277 | 33.8094993 | 20.58 | 39.75 | 35-40% | No |
| 6085506304 | 4958 | Santa Clara | 95117 | San Jose | -121.9703514 | 37.3123141 | 20.57 | 39.74 | 35-40% | No |
| 6067009614 | 6658 | Sacramento | 95758 | Elk Grove | -121.4320545 | 38.4372393 | 20.57 | 39.73 | 35-40% | No |
| 6059099232 | 5325 | Orange | 92708 | Fountain Valley | -117.9605931 | 33.6942394 | 20.55 | 39.71 | 35-40% | No |
| 6085506203 | 6163 | Santa Clara | 95129 | San Jose | -121.9829171 | 37.3206997 | 20.55 | 39.70 | 35-40% | No |
| 6037403322 | 3808 | Los Angeles | 91765 | Diamond Bar | -117.8357129 | 33.990991 | 20.54 | 39.69 | 35-40% | No |
| 6037103400 | 6143 | Los Angeles | 91040 | Sunland | -118.3139736 | 34.2548355 | 20.53 | 39.68 | 35-40% | No |
| 6083002305 | 7556 | Santa Barbara | 93458 | Santa Maria | -120.4444646 | 34.9714322 | 20.53 | 39.66 | 35-40% | No |
| 6081607702 | 2859 | San Mateo | 94401 | San Mateo | -122.302725 | 37.5649733 | 20.52 | 39.65 | 35-40% | No |
| 6035040400 | 9422 | Lassen | 96117 | Litchfield | -120.3657009 | 40.4415822 | 20.52 | 39.64 | 35-40% | No |
| 6073019403 | 5255 | San Diego | 92056 | Oceanside | -117.2669427 | 33.2107453 | 20.51 | 39.63 | 35-40% | No |
| 6037571400 | 4770 | Los Angeles | 90712 | Lakewood | -118.1600342 | 33.8351031 | 20.50 | 39.61 | 35-40% | No |
| 6085504421 | 4733 | Santa Clara | 95035 | Milpitas | -121.9009699 | 37.4513759 | 20.50 | 39.60 | 35-40% | No |
| 6067009407 | 9944 | Sacramento | 95632 | Galt | -121.2877759 | 38.2826336 | 20.49 | 39.59 | 35-40% | No |
| 6037401203 | 5216 | Los Angeles | 91740 | Glendora | -117.853784 | 34.1111653 | 20.49 | 39.58 | 35-40% | No |
| 6037910208 | 6340 | Los Angeles | 93551 | Palmdale | -118.1555823 | 34.596643 | 20.49 | 39.56 | 35-40% | No |
| 6037143300 | 5871 | Los Angeles | 91602 | North Hollywood | -118.3866139 | 34.152183 | 20.49 | 39.55 | 35-40% | No |
| 6001441524 | 4010 | Alameda | 94555 | Fremont | -122.0506927 | 37.5594781 | 20.48 | 39.54 | 35-40% | No |
| 6037401102 | 3101 | Los Angeles | 91741 | Glendora | -117.866662 | 34.1310435 | 20.48 | 39.53 | 35-40% | No |
| 6037430801 | 6342 | Los Angeles | 91006 | Arcadia | -118.0267442 | 34.1384568 | 20.48 | 39.51 | 35-40% | No |
| 6071009714 | 3606 | San Bernardino | 92307 | Apple Valley | -117.2006679 | 34.5311782 | 20.47 | 39.50 | 35-40% | No |
| 6007000300 | 4410 | Butte | 95973 | Chico | -121.8641991 | 39.7638851 | 20.47 | 39.49 | 35-40% | No |
| 6065042737 | 2401 | Riverside | 92596 | Winchester | -117.0778761 | 33.6665082 | 20.46 | 39.48 | 35-40% | No |
| 6037113231 | 2125 | Los Angeles | 91304 | Canoga Park | -118.6502378 | 34.2266028 | 20.44 | 39.46 | 35-40% | No |
| 6037463700 | 2236 | Los Angeles | 91105 | Pasadena | -118.1562323 | 34.139856 | 20.44 | 39.45 | 35-40% | No |
| 6071010416 | 3433 | San Bernardino | 92277 | Twentynine Palms | -116.197921 | 34.1218895 | 20.43 | 39.44 | 35-40% | No |
| 6073020707 | 4734 | San Diego | 92025 | Escondido | -117.0693151 | 33.1059882 | 20.43 | 39.42 | 35-40% | No |
| 6065042708 | 5171 | Riverside | 92586 | Sun City | -117.1905999 | 33.6888926 | 20.43 | 39.41 | 35-40% | No |
| 6071002022 | 11426 | San Bernardino | 91739 | Rancho Cucamonga | -117.516112 | 34.1510649 | 20.43 | 39.40 | 35-40% | No |
| 6037462900 | 3818 | Los Angeles | 91107 | Pasadena | -118.0900164 | 34.15374 | 20.42 | 39.39 | 35-40% | No |
| 6067005901 | 5892 | Sacramento | 95821 | Sacramento | -121.3570367 | 38.6362404 | 20.41 | 39.37 | 35-40% | No |
| 6065043242 | 8148 | Riverside | 92596 | Winchester | -117.1031008 | 33.5873473 | 20.40 | 39.36 | 35-40% | No |
| 6065041905 | 2935 | Riverside | 92882 | Corona | -117.6042543 | 33.8697102 | 20.39 | 39.35 | 35-40% | No |
| 6041105000 | 6590 | Marin | 94949 | Novato | -122.5155998 | 38.058006 | 20.39 | 39.34 | 35-40% | No |
| 6071009712 | 5978 | San Bernardino | 92308 | Apple Valley | -117.1641151 | 34.4848736 | 20.39 | 39.32 | 35-40% | No |
| 6067005605 | 3124 | Sacramento | 95864 | Sacramento | -121.3922567 | 38.5922351 | 20.38 | 39.31 | 35-40% | No |
| 6083002206 | 4782 | Santa Barbara | 93454 | Santa Maria | -120.4265923 | 34.9567334 | 20.38 | 39.30 | 35-40% | No |
| 6037700902 | 6517 | Los Angeles | 90212 | Beverly Hills | -118.3944002 | 34.0620828 | 20.38 | 39.29 | 35-40% | No |
| 6067009310 | 7000 | Sacramento | 95624 | Elk Grove | -121.36407 | 38.3933575 | 20.37 | 39.27 | 35-40% | No |
| 6085512025 | 3203 | Santa Clara | 95136 | San Jose | -121.8523356 | 37.260732 | 20.37 | 39.26 | 35-40% | No |
| 6037186201 | 3068 | Los Angeles | 90041 | Los Angeles | -118.2188456 | 34.1213123 | 20.37 | 39.25 | 35-40% | No |
| 6037278102 | 3158 | Los Angeles | 90293 | Playa del Rey | -118.4523916 | 33.9583368 | 20.37 | 39.24 | 35-40% | No |
| 6095250605 | 4223 | Solano | 94591 | Vallejo | -122.2027379 | 38.0700529 | 20.36 | 39.22 | 35-40% | No |
| 6037910712 | 2772 | Los Angeles | 93552 | Palmdale | -118.0525805 | 34.5516033 | 20.35 | 39.21 | 35-40% | No |
| 6001441923 | 5605 | Alameda | 94538 | Fremont | -121.9850086 | 37.5509731 | 20.34 | 39.20 | 35-40% | No |
| 6097150701 | 4609 | Sonoma | 94952 | Petaluma | -122.6301681 | 38.232937 | 20.34 | 39.19 | 35-40% | No |
| 6059062625 | 4381 | Orange | 92653 | Laguna Hills | -117.7057718 | 33.5930992 | 20.33 | 39.17 | 35-40% | No |
| 6095252202 | 9825 | Solano | 94534 | Fairfield | -122.1486859 | 38.1649825 | 20.33 | 39.16 | 35-40% | No |
| 6083001206 | 4480 | Santa Barbara | 93101 | Santa Barbara | -119.695588 | 34.4084121 | 20.32 | 39.15 | 35-40% | No |
| 6073008504 | 6021 | San Diego | 92117 | San Diego | -117.195777 | 32.8226369 | 20.32 | 39.13 | 35-40% | No |
| 6113010401 | 4532 | Yolo | 95620 | Dixon | -121.6408756 | 38.4299171 | 20.32 | 39.12 | 35-40% | No |
| 6029000505 | 3764 | Kern | 93308 | Bakersfield | -119.0833307 | 35.4069513 | 20.31 | 39.11 | 35-40% | No |
| 6065042738 | 5729 | Riverside | 92584 | Menifee | -117.1474008 | 33.6786757 | 20.31 | 39.10 | 35-40% | No |
| 6073019805 | 3763 | San Diego | 92056 | Oceanside | -117.286498 | 33.1803561 | 20.31 | 39.08 | 35-40% | No |
| 6037910601 | 6460 | Los Angeles | 93550 | Palmdale | -118.0773655 | 34.5829354 | 20.29 | 39.07 | 35-40% | No |
| 6073002904 | 7316 | San Diego | 92115 | San Diego | -117.0626516 | 32.7715642 | 20.28 | 39.06 | 35-40% | No |
| 6065043818 | 3832 | Riverside | 92223 | Beaumont | -116.9514006 | 33.9374604 | 20.28 | 39.05 | 35-40% | No |
| 6073014101 | 3507 | San Diego | 91945 | Lemon Grove | -117.0325983 | 32.7243261 | 20.27 | 39.03 | 35-40% | No |
| 6037134422 | 4684 | Los Angeles | 91307 | West Hills | -118.6306683 | 34.2024601 | 20.27 | 39.02 | 35-40% | No |
| 6001427900 | 4567 | Alameda | 94501 | Alameda | -122.2582454 | 37.7698045 | 20.27 | 39.01 | 35-40% | No |
| 6037504001 | 5709 | Los Angeles | 90638 | La Mirada | -118.016038 | 33.9092096 | 20.26 | 39.00 | 35-40% | No |
| 6067002600 | 2505 | Sacramento | 95818 | Sacramento | -121.4817038 | 38.5543039 | 20.26 | 38.98 | 35-40% | No |
| 6055201601 | 2287 | Napa | 94574 | Saint Helena | -122.4550323 | 38.5022881 | 20.26 | 38.97 | 35-40% | No |
| 6079012401 | 6621 | San Luis Obispo | 93444 | Nipomo | -120.4790939 | 35.0336698 | 20.26 | 38.96 | 35-40% | No |
| 6055200601 | 5016 | Napa | 94558 | Napa | -122.3124397 | 38.3317567 | 20.25 | 38.95 | 35-40% | No |
| 6053001600 | 2642 | Monterey | 93901 | Salinas | -121.6776094 | 36.6701186 | 20.24 | 38.93 | 35-40% | No |
| 6073002804 | 4638 | San Diego | 92115 | San Diego | -117.0739019 | 32.7647357 | 20.24 | 38.92 | 35-40% | No |
| 6037265305 | 4082 | Los Angeles | 90024 | Los Angeles | -118.4490226 | 34.0626943 | 20.23 | 38.91 | 35-40% | No |
| 6059011503 | 1727 | Orange | 92831 | Fullerton | -117.8934116 | 33.8793825 | 20.23 | 38.90 | 35-40% | No |
| 6037570901 | 5647 | Los Angeles | 90713 | Lakewood | -118.1089643 | 33.8524335 | 20.22 | 38.88 | 35-40% | No |
| 6037576503 | 4454 | Los Angeles | 90802 | Long Beach | -118.1697407 | 33.7718291 | 20.21 | 38.87 | 35-40% | No |
| 6037195202 | 3185 | Los Angeles | 90027 | Los Angeles | -118.2785412 | 34.1029474 | 20.21 | 38.86 | 35-40% | No |
| 6037920041 | 2871 | Los Angeles | 91387 | Canyon Country | -118.4333787 | 34.4180484 | 20.21 | 38.84 | 35-40% | No |
| 6037900609 | 5243 | Los Angeles | 93535 | Lancaster | -118.0999054 | 34.7059962 | 20.21 | 38.83 | 35-40% | No |
| 6059052423 | 5545 | Orange | 92630 | Lake Forest | -117.6599285 | 33.6588801 | 20.20 | 38.82 | 35-40% | No |
| 6113010902 | 6189 | Yolo | 95695 | Woodland | -121.788585 | 38.6811985 | 20.19 | 38.81 | 35-40% | No |
| 6111008900 | 3590 | Ventura | 93033 | Oxnard | -119.1898328 | 34.1720578 | 20.18 | 38.79 | 35-40% | No |
| 6001442602 | 5074 | Alameda | 94536 | Fremont | -122.0049883 | 37.5481818 | 20.17 | 38.78 | 35-40% | No |
| 6075011100 | 5164 | San Francisco | 94109 | San Francisco | -122.419076 | 37.7907445 | 20.15 | 38.77 | 35-40% | No |
| 6061020805 | 3902 | Placer | 95678 | Roseville | -121.2933222 | 38.728908 | 20.15 | 38.76 | 35-40% | No |
| 6109004200 | 3954 | Tuolumne | 40 | Yosemite NTL Park | -119.6407227 | 37.9494993 | 20.15 | 38.74 | 35-40% | No |

| | | | | | | | | | | | | | | |
|---|---|---|---|---|---|---|---|---|---|---|---|---|---|---|
| 6001450400 | 5968 | Alameda | 94568 | Dublin | -121.9324146 | 37.7126931 | 20.15 | 38.73 | 35-40% | No | 0.038 | 22.34 | 8.69794377 | 30.70 |
| 6073013903 | 4116 | San Diego | 91977 | Spring Valley | -116.996053 | 32.7017506 | 20.14 | 38.72 | 35-40% | No | 0.042 | 31.84 | 12.05 | 81.66 |
| 6081600500 | 7443 | San Mateo | 94014 | Daly City | -122.4568853 | 37.6970709 | 20.14 | 38.71 | 35-40% | No | 0.030 | 7.58 | 8.69794377 | 30.70 |
| 6065050300 | 11161 | Riverside | 92563 | Murrieta | -117.1520055 | 33.5863863 | 20.14 | 38.69 | 35-40% | No | 0.057 | 82.10 | 7.02122524 | 10.74 |
| 6037108102 | 3430 | Los Angeles | 91326 | Porter Ranch | -118.5550665 | 34.2804584 | 20.14 | 38.68 | 35-40% | No | 0.060 | 85.21 | 10.37 | 52.61 |
| 6073013909 | 4489 | San Diego | 91977 | Spring Valley | -116.9898629 | 32.7116102 | 20.14 | 38.67 | 35-40% | No | 0.042 | 31.84 | 12.05 | 81.66 |
| 6075031202 | 3137 | San Francisco | 94112 | San Francisco | -122.4523964 | 37.7193276 | 20.13 | 38.66 | 35-40% | No | 0.030 | 7.58 | 8.69794377 | 30.70 |
| 6083002809 | 5035 | Santa Barbara | 93436 | Lompoc | -120.3432843 | 34.6948804 | 20.12 | 38.64 | 35-40% | No | 0.038 | 22.34 | 4.50614746 | 1.86 |
| 6111002500 | 4795 | Ventura | 93001 | Ventura | -119.2629165 | 34.255445 | 20.12 | 38.63 | 35-40% | No | 0.044 | 40.49 | 9.53630303 | 40.92 |
| 6055200302 | 2504 | Napa | 94559 | Napa | -122.2594555 | 38.2877477 | 20.12 | 38.62 | 35-40% | No | 0.035 | 16.94 | 7.85958451 | 17.81 |
| 6037703002 | 6605 | Los Angeles | 90056 | Los Angeles | -118.3729521 | 33.9875024 | 20.12 | 38.61 | 35-40% | No | 0.046 | 53.02 | 12.05 | 81.66 |
| 6073003211 | 3165 | San Diego | 92139 | San Diego | -117.0547677 | 32.6775705 | 20.11 | 38.59 | 35-40% | No | 0.040 | 25.87 | 11.21 | 66.23 |
| 6059075405 | 2980 | Orange | 92705 | Santa Ana | -117.841268 | 33.7634533 | 20.11 | 38.58 | 35-40% | No | 0.048 | 60.88 | 10.37 | 52.61 |
| 6083002802 | 7024 | Santa Barbara | 93436 | Lompoc | -120.4553583 | 34.6647495 | 20.11 | 38.57 | 35-40% | No | 0.038 | 22.34 | 4.50614746 | 1.86 |
| 6077004105 | 4920 | San Joaquin | 95242 | Lodi | -121.3290413 | 38.1663993 | 20.10 | 38.55 | 35-40% | No | 0.046 | 53.02 | 9.53630303 | 40.92 |
| 6065044521 | 1196 | Riverside | 92282 | White Water | -116.6555007 | 33.9744497 | 20.10 | 38.54 | 35-40% | No | 0.068 | 100.00 | 5.76368635 | 4.73 |
| 6037275602 | 6470 | Los Angeles | 90094 | Los Angeles | -118.4172475 | 33.9769997 | 20.10 | 38.53 | 35-40% | No | 0.046 | 53.02 | 12.05 | 81.66 |
| 6037214400 | 2877 | Los Angeles | 90036 | Los Angeles | -118.3573276 | 34.0781666 | 20.09 | 38.52 | 35-40% | No | 0.048 | 60.88 | 12.05 | 81.66 |
| 6041129000 | 2359 | Marin | 94965 | Sausalito | -122.513094 | 37.8692756 | 20.09 | 38.50 | 35-40% | No | 0.030 | 7.58 | 7.85958451 | 17.81 |
| 6073003209 | 5385 | San Diego | 92139 | San Diego | -117.0387603 | 32.6835898 | 20.09 | 38.49 | 35-40% | No | 0.040 | 25.87 | 11.63 | 69.14 |
| 6065042014 | 10516 | Riverside | 92508 | Riverside | -117.3226083 | 33.8910477 | 20.09 | 38.48 | 35-40% | No | 0.065 | 98.18 | 12.89 | 92.89 |
| 6037570001 | 4463 | Los Angeles | 90713 | Lakewood | -118.117102 | 33.863466 | 20.09 | 38.47 | 35-40% | No | 0.044 | 40.49 | 11.63 | 69.14 |
| 6019005512 | 4824 | Fresno | 93611 | Clovis | -119.6757076 | 36.8456635 | 20.08 | 38.45 | 35-40% | No | 0.065 | 98.18 | 15.4 | 97.22 |
| 6033000501 | 3222 | Lake | 95423 | Clearlake Oaks | -122.7065788 | 39.1620236 | 20.08 | 38.44 | 35-40% | No | 0.042 | 31.84 | 4.92532709 | 2.32 |
| 6111003011 | 5397 | Ventura | 93036 | Oxnard | -119.1903853 | 34.224257 | 20.07 | 38.43 | 35-40% | No | 0.044 | 40.49 | 9.53630303 | 40.92 |
| 6037403321 | 6034 | Los Angeles | 91765 | Diamond Bar | -117.7792994 | 34.0162998 | 20.07 | 38.42 | 35-40% | No | 0.057 | 82.10 | 12.47 | 83.99 |
| 6037267100 | 6087 | Los Angeles | 90025 | Los Angeles | -118.4245499 | 34.0525736 | 20.06 | 38.40 | 35-40% | No | 0.046 | 53.02 | 12.05 | 81.66 |
| 6037189701 | 3942 | Los Angeles | 90068 | Los Angeles | -118.3345237 | 34.1319418 | 20.05 | 38.39 | 35-40% | No | 0.053 | 73.93 | 12.05 | 81.66 |
| 6037501501 | 2244 | Los Angeles | 90601 | Whittier | -118.0208427 | 34.0017622 | 20.05 | 38.38 | 35-40% | No | 0.046 | 53.02 | 12.05 | 81.66 |
| 6007000201 | 4052 | Butte | 95973 | Chico | -121.8638042 | 39.7754009 | 20.03 | 38.37 | 35-40% | No | 0.048 | 60.88 | 9.53630303 | 40.92 |
| 6037273600 | 2413 | Los Angeles | 90291 | Venice | -118.4599433 | 33.9933608 | 20.03 | 38.35 | 35-40% | No | 0.046 | 53.02 | 12.05 | 81.66 |
| 6073020208 | 2501 | San Diego | 92027 | Escondido | -117.0530788 | 33.1461143 | 20.03 | 38.34 | 35-40% | No | 0.048 | 60.88 | 10.37 | 52.61 |
| 6007002900 | 3060 | Butte | 95965 | Oroville | -121.5980004 | 39.5191072 | 20.03 | 38.33 | 35-40% | No | 0.051 | 69.23 | 8.69794377 | 30.70 |
| 6089012101 | 4505 | Shasta | 96007 | Anderson | -122.3051577 | 40.4613796 | 20.02 | 38.32 | 35-40% | No | 0.046 | 53.02 | 6.18286598 | 7.76 |
| 6095252104 | 5536 | Solano | 94510 | Benicia | -122.1640059 | 38.0900638 | 20.02 | 38.30 | 35-40% | No | 0.035 | 16.94 | 7.85958451 | 17.81 |
| 6095252909 | 3235 | Solano | 95687 | Vacaville | -121.9249586 | 38.3446313 | 20.02 | 38.29 | 35-40% | No | 0.042 | 31.84 | 7.85958451 | 17.81 |
| 6081609100 | 1525 | San Mateo | 94070 | San Carlos | -122.2554355 | 37.5101395 | 20.02 | 38.28 | 35-40% | No | 0.033 | 11.08 | 9.53630303 | 40.92 |
| 6075010800 | 4578 | San Francisco | 94133 | San Francisco | -122.4142914 | 37.7964984 | 20.01 | 38.26 | 35-40% | No | 0.030 | 7.58 | 8.69794377 | 30.70 |
| 6063000300 | 4760 | Plumas | 96122 | Portola | -120.3358146 | 39.9140961 | 20.01 | 38.25 | 35-40% | No | 0.055 | 77.87 | 6.05814438 | 4.98 |
| 6101050800 | 3460 | Sutter | 95953 | Live Oak | -121.8399669 | 39.2210289 | 20.00 | 38.24 | 35-40% | No | 0.051 | 69.23 | 8.27876414 | 20.16 |
| 6049000300 | 2993 | Modoc | 96108 | Davis Creek | -120.6933431 | 41.6379522 | 19.99 | 38.23 | 35-40% | No | 0.048 | 60.88 | 4.81866163 | 1.95 |
| 6037650604 | 5412 | Los Angeles | 90503 | Torrance | -118.349124 | 33.8403641 | 19.97 | 38.21 | 35-40% | No | 0.044 | 40.49 | 12.05 | 81.66 |
| 6091010000 | 3240 | Sierra | 96124 | Calpine | -120.5219926 | 39.5769252 | 19.97 | 38.20 | 35-40% | No | 0.053 | 73.93 | 7.44040487 | 11.80 |
| 6037503801 | 4080 | Los Angeles | 90638 | La Mirada | -117.9932439 | 33.8962298 | 19.96 | 38.19 | 35-40% | No | 0.046 | 53.02 | 11.21 | 66.23 |
| 6023001000 | 5906 | Humboldt | 95521 | Arcata | -124.080234 | 40.8665615 | 19.96 | 38.18 | 35-40% | No | 0.026 | 0.24 | 6.18286598 | 7.76 |
| 6071000812 | 3845 | San Bernardino | 91730 | Rancho Cucamonga | -117.620363 | 34.116218 | 19.95 | 38.16 | 35-40% | No | 0.065 | 98.18 | 12.89 | 92.89 |
| 6067009011 | 3964 | Sacramento | 95670 | Rancho Cordova | -121.2719777 | 38.5746641 | 19.95 | 38.15 | 35-40% | No | 0.051 | 69.23 | 9.53630303 | 40.92 |
| 6065045233 | 4244 | Riverside | 92203 | Indio | -116.289198 | 33.749192 | 19.95 | 38.14 | 35-40% | No | 0.062 | 91.10 | 7.85958451 | 17.81 |
| 6065941100 | 2051 | Riverside | 92234 | Cathedral City | -116.4701978 | 33.7959943 | 19.94 | 38.13 | 35-40% | No | 0.068 | 100.00 | 7.02122524 | 10.74 |
| 6071009716 | 6974 | San Bernardino | 92307 | Apple Valley | -117.2267112 | 34.5425661 | 19.93 | 38.11 | 35-40% | No | 0.065 | 98.18 | 7.02122524 | 10.74 |
| 6065042207 | 3017 | Riverside | 92506 | Riverside | -117.3385631 | 33.9418987 | 19.92 | 38.10 | 35-40% | No | 0.065 | 98.18 | 12.47 | 83.99 |
| 6077003602 | 3272 | San Joaquin | 95215 | Stockton | -121.1809166 | 38.0018256 | 19.91 | 38.09 | 35-40% | No | 0.048 | 60.88 | 12.51 | 84.01 |
| 6013392300 | 3102 | Contra Costa | 94547 | Hercules | -122.2744575 | 38.0264084 | 19.90 | 38.08 | 35-40% | No | 0.033 | 11.08 | 7.85958451 | 17.81 |
| 6065043228 | 4108 | Riverside | 92562 | Murrieta | -117.2137751 | 33.5753129 | 19.90 | 38.06 | 35-40% | No | 0.057 | 82.10 | 8.27876414 | 20.16 |
| 6085509201 | 4603 | Santa Clara | 94043 | Mountain View | -122.0743461 | 37.4012062 | 19.89 | 38.05 | 35-40% | No | 0.035 | 16.94 | 9.95548266 | 42.86 |
| 6059052525 | 15473 | Orange | 92602 | Irvine | -117.7783403 | 33.7166338 | 19.89 | 38.04 | 35-40% | No | 0.048 | 60.88 | 9.95548266 | 42.86 |
| 6059062646 | 3257 | Orange | 92637 | Laguna Woods | -117.7160562 | 33.606971 | 19.88 | 38.02 | 35-40% | No | 0.048 | 60.88 | 8.69794377 | 30.70 |
| 6085504102 | 5480 | Santa Clara | 95127 | San Jose | -121.8149477 | 37.3640773 | 19.88 | 38.01 | 35-40% | No | 0.038 | 22.34 | 10.37 | 52.61 |
| 6095251702 | 2578 | Solano | 94590 | Vallejo | -122.2687139 | 38.1220821 | 19.87 | 38.00 | 35-40% | No | 0.035 | 16.94 | 7.85958451 | 17.81 |
| 6059062622 | 4072 | Orange | 92637 | Laguna Woods | -117.7248144 | 33.6167121 | 19.87 | 37.99 | 35-40% | No | 0.048 | 60.88 | 8.69794377 | 30.70 |
| 6029005507 | 7198 | Kern | 93505 | California City | -117.9674113 | 35.1264114 | 19.86 | 37.97 | 35-40% | No | 0.065 | 98.18 | 6.70310916 | 8.73 |
| 6053000200 | 6884 | Monterey | 93906 | Salinas | -121.6435841 | 36.7023913 | 19.86 | 37.96 | 35-40% | No | 0.033 | 11.08 | 5.34450672 | 3.92 |
| 6085503315 | 7481 | Santa Clara | 95148 | San Jose | -121.801337 | 37.3184116 | 19.86 | 37.95 | 35-40% | No | 0.038 | 22.34 | 10.37 | 52.61 |
| 6037269100 | 4359 | Los Angeles | 90035 | Los Angeles | -118.3948253 | 34.0530704 | 19.86 | 37.94 | 35-40% | No | 0.048 | 60.88 | 12.05 | 81.66 |
| 6065043291 | 8224 | Riverside | 92563 | Murrieta | -117.1553002 | 33.5660699 | 19.85 | 37.92 | 35-40% | No | 0.057 | 82.10 | 6.60204561 | 8.67 |
| 6005000200 | 4672 | Amador | 95629 | Fiddletown | -120.7448948 | 38.4852152 | 19.82 | 37.91 | 35-40% | No | 0.055 | 77.87 | 6.57290751 | 8.01 |
| 6081613800 | 4005 | San Mateo | 94060 | Pescadero | -122.3140903 | 37.2768483 | 19.82 | 37.90 | 35-40% | No | 0.035 | 16.94 | 9.95548266 | 42.86 |
| 6073010401 | 2458 | San Diego | 91932 | Imperial Beach | -117.1072875 | 32.5794072 | 19.82 | 37.89 | 35-40% | No | 0.038 | 22.34 | 12.89 | 92.89 |
| 6071000815 | 3584 | San Bernardino | 91784 | Upland | -117.6804289 | 34.1272011 | 19.82 | 37.87 | 35-40% | No | 0.062 | 91.10 | 12.47 | 83.99 |
| 6071002013 | 4207 | San Bernardino | 91701 | Rancho Cucamonga | -117.6072895 | 34.138221 | 19.81 | 37.86 | 35-40% | No | 0.065 | 98.18 | 12.89 | 92.89 |
| 6085505900 | 7079 | Santa Clara | 95050 | Santa Clara | -121.9571425 | 37.330263 | 19.81 | 37.85 | 35-40% | No | 0.035 | 16.94 | 10.37 | 52.61 |
| 6001440304 | 4674 | Alameda | 94587 | Union City | -122.0766119 | 37.586873 | 19.81 | 37.84 | 35-40% | No | 0.033 | 11.08 | 8.69794377 | 30.70 |
| 6037408629 | 2926 | Los Angeles | 91745 | Hacienda Heights | -117.9603912 | 33.9780615 | 19.80 | 37.82 | 35-40% | No | 0.048 | 60.88 | 12.05 | 81.66 |
| 6111001402 | 5677 | Ventura | 93003 | Ventura | -119.1820881 | 34.254839 | 19.78 | 37.81 | 35-40% | No | 0.044 | 40.49 | 9.53630303 | 40.92 |
| 6077005209 | 6858 | San Joaquin | 95377 | Tracy | -121.4243351 | 37.7086246 | 19.78 | 37.80 | 35-40% | No | 0.055 | 77.87 | 10.37 | 52.61 |
| 6067008009 | 4407 | Sacramento | 95628 | Fair Oaks | -121.2584098 | 38.643865 | 19.78 | 37.79 | 35-40% | No | 0.053 | 73.93 | 9.1171234 | 32.61 |
| 6001451404 | 6610 | Alameda | 94551 | Livermore | -121.7803522 | 37.6852748 | 19.77 | 37.77 | 35-40% | No | 0.040 | 25.87 | 8.69794377 | 30.70 |
| 6073018300 | 2166 | San Diego | 92054 | Oceanside | -117.3896198 | 33.201527 | 19.76 | 37.76 | 35-40% | No | 0.042 | 31.84 | 9.53630303 | 40.92 |
| 6085508704 | 5227 | Santa Clara | 94085 | Sunnyvale | -122.0047735 | 37.3800277 | 19.76 | 37.75 | 35-40% | No | 0.035 | 16.94 | 10.37 | 52.61 |
| 6083002707 | 2287 | Santa Barbara | 93436 | Lompoc | -120.4658965 | 34.6350153 | 19.76 | 37.73 | 35-40% | No | 0.038 | 22.34 | 4.50614746 | 1.86 |
| 6055200802 | 5481 | Napa | 94558 | Napa | -122.3027487 | 38.2689461 | 19.75 | 37.72 | 35-40% | No | 0.035 | 16.94 | 7.85958451 | 17.81 |
| 6037910602 | 3995 | Los Angeles | 93550 | Palmdale | -118.0788777 | 34.5774296 | 19.75 | 37.71 | 35-40% | No | 0.062 | 91.10 | 6.18286598 | 7.76 |
| 6073020210 | 4639 | San Diego | 92027 | Escondido | -117.0410689 | 33.1455819 | 19.74 | 37.70 | 35-40% | No | 0.048 | 60.88 | 10.37 | 52.61 |
| 6001440100 | 2310 | Alameda | 94587 | Union City | -121.9815046 | 37.6163011 | 19.73 | 37.68 | 35-40% | No | 0.035 | 16.94 | 8.69794377 | 30.70 |
| 6037900508 | 3334 | Los Angeles | 93535 | Lancaster | -118.072221 | 34.6789749 | 19.73 | 37.67 | 35-40% | No | 0.062 | 91.10 | 6.18286598 | 7.76 |
| 6005000402 | 4740 | Amador | 95665 | Pine Grove | -120.6621779 | 38.3930097 | 19.72 | 37.66 | 35-40% | No | 0.053 | 73.93 | 5.56792694 | 4.00 |
| 6037576802 | 3992 | Los Angeles | 90814 | Long Beach | -118.1577274 | 33.7717856 | 19.72 | 37.65 | 35-40% | No | 0.042 | 31.84 | 11.21 | 66.23 |
| 6067009616 | 5814 | Sacramento | 95758 | Elk Grove | -121.4252454 | 38.4170956 | 19.72 | 37.63 | 35-40% | No | 0.048 | 60.88 | 9.1171234 | 32.61 |
| 6073020209 | 4748 | San Diego | 92027 | Escondido | -117.0476028 | 33.138326 | 19.71 | 37.62 | 35-40% | No | 0.048 | 60.88 | 10.37 | 52.61 |
| 6037430803 | 5439 | Los Angeles | 91006 | Arcadia | -118.0227522 | 34.1156128 | 19.71 | 37.61 | 35-40% | No | 0.051 | 69.23 | 10.79 | 54.48 |
| 6001424001 | 3716 | Alameda | 94703 | Berkeley | -122.2746683 | 37.8503526 | 19.71 | 37.60 | 35-40% | No | 0.030 | 7.58 | 8.69794377 | 30.70 |
| 6065042005 | 5102 | Riverside | 92508 | Riverside | -117.3464919 | 33.8972547 | 19.71 | 37.58 | 35-40% | No | 0.065 | 98.18 | 12.47 | 83.99 |
| 6097154000 | 2597 | Sonoma | 95448 | Healdsburg | -122.9724857 | 38.6117558 | 19.71 | 37.57 | 35-40% | No | 0.035 | 16.94 | 6.85199234 | 8.87 |
| 6073008350 | 6493 | San Diego | 92121 | San Diego | -117.1716969 | 32.8914561 | 19.69 | 37.56 | 35-40% | No | 0.044 | 40.49 | 9.53630303 | 40.92 |
| 6065042742 | 4232 | Riverside | 92584 | Menifee | -117.1883088 | 33.6777927 | 19.69 | 37.55 | 35-40% | No | 0.060 | 85.21 | 9.95548266 | 42.86 |
| 6059042107 | 4254 | Orange | 92672 | San Clemente | -117.6217862 | 33.4320693 | 19.68 | 37.53 | 35-40% | No | 0.048 | 60.88 | 8.69794377 | 30.70 |
| 6073012900 | 3374 | San Diego | 91910 | Chula Vista | -117.0676039 | 32.6274203 | 19.67 | 37.52 | 35-40% | No | 0.040 | 25.87 | 11.21 | 66.23 |
| 6027000200 | 1718 | Inyo | 93514 | Bishop | -118.5534882 | 37.3161335 | 19.67 | 37.51 | 35-40% | No | 0.062 | 91.10 | 4.50614746 | 1.86 |
| 6097153801 | 9648 | Sonoma | 95492 | Windsor | -122.8390298 | 38.5354711 | 19.67 | 37.50 | 35-40% | No | 0.033 | 11.08 | 8.55963229 | 20.21 |
| 6013370000 | 2837 | Contra Costa | 94805 | Richmond | -122.322249 | 37.93966 | 19.67 | 37.48 | 35-40% | No | 0.030 | 7.58 | 8.69794377 | 30.70 |
| 6073020307 | 7170 | San Diego | 92029 | Escondido | -117.1270331 | 33.0939803 | 19.66 | 37.47 | 35-40% | No | 0.046 | 53.02 | 10.37 | 52.61 |
| 6095250200 | 4000 | Solano | 94591 | Vallejo | -122.2101506 | 38.1044692 | 19.66 | 37.46 | 35-40% | No | 0.035 | 16.94 | 7.85958451 | 17.81 |
| 6007001800 | 5640 | Butte | 95969 | Paradise | -121.6098642 | 39.7817973 | 19.66 | 37.44 | 35-40% | No | 0.053 | 73.93 | 9.53630303 | 40.92 |
| 6111008306 | 3714 | Ventura | 93063 | Simi Valley | -118.6865756 | 34.2793634 | 19.65 | 37.43 | 35-40% | No | 0.055 | 77.87 | 9.53630303 | 40.92 |
| 6073004200 | 5673 | San Diego | 92104 | San Diego | -117.1194261 | 32.7293167 | 19.65 | 37.42 | 35-40% | No | 0.040 | 25.87 | 11.21 | 66.23 |
| 6083000801 | 4059 | Santa Barbara | 93103 | Santa Barbara | -119.6856673 | 34.4273462 | 19.65 | 37.41 | 35-40% | No | 0.040 | 25.87 | 4.92532709 | 2.32 |
| 6029002806 | 2176 | Kern | 93311 | Bakersfield | -119.1055446 | 35.351304 | 19.64 | 37.39 | 35-40% | No | 0.062 | 91.10 | 18.76 | 99.64 |
| 6059110117 | 5920 | Orange | 90630 | Cypress | -118.0571887 | 33.8258098 | 19.64 | 37.38 | 35-40% | No | 0.044 | 40.49 | 11.21 | 66.23 |
| 6073001700 | 4772 | San Diego | 92116 | San Diego | -117.1207142 | 32.7582452 | 19.63 | 37.37 | 35-40% | No | 0.040 | 25.87 | 10.37 | 52.61 |
| 6037108202 | 4895 | Los Angeles | 91326 | Porter Ranch | -118.5796806 | 34.286095 | 19.63 | 37.36 | 35-40% | No | 0.057 | 82.10 | 10.37 | 52.61 |
| 6065042743 | 1907 | Riverside | 92584 | Menifee | -117.1885988 | 33.6560933 | 19.63 | 37.34 | 35-40% | No | 0.060 | 85.21 | 9.53630303 | 40.92 |
| 6037920326 | 6840 | Los Angeles | 91381 | Stevenson Ranch | -118.5979256 | 34.3510157 | 19.62 | 37.33 | 35-40% | No | 0.062 | 91.10 | 9.95548266 | 42.86 |
| 6001430800 | 5394 | Alameda | 94546 | Castro Valley | -122.0650347 | 37.6992244 | 19.62 | 37.32 | 35-40% | No | 0.033 | 11.08 | 8.69794377 | 30.70 |
| 6081607500 | 3636 | San Mateo | 94403 | San Mateo | -122.2997437 | 37.5467375 | 19.61 | 37.31 | 35-40% | No | 0.033 | 11.08 | 8.69794377 | 30.70 |
| 6065044915 | 6489 | Riverside | 92234 | Cathedral City | -116.4624368 | 33.8086838 | 19.61 | 37.29 | 35-40% | No | 0.068 | 100.00 | 7.02122524 | 10.74 |
| 6037131200 | 3429 | Los Angeles | 91325 | Northridge | -118.514231 | 34.2147262 | 19.60 | 37.28 | 35-40% | No | 0.060 | 85.21 | 10.37 | 52.61 |
| 6073018510 | 2975 | San Diego | 92054 | Oceanside | -117.3364699 | 33.2158066 | 19.58 | 37.27 | 35-40% | No | 0.042 | 31.84 | 8.69794377 | 30.70 |
| 6001441601 | 4561 | Alameda | 94536 | Fremont | -122.0305372 | 37.5635007 | 19.56 | 37.26 | 35-40% | No | 0.035 | 16.94 | 8.69794377 | 30.70 |
| 6079010102 | 6989 | San Luis Obispo | 93446 | Paso Robles | -120.6911679 | 35.6355612 | 19.56 | 37.24 | 35-40% | No | 0.042 | 31.84 | 8.09677038 | 17.86 |
| 6001427700 | 4866 | Alameda | 94501 | Alameda | -122.2852965 | 37.7680009 | 19.56 | 37.23 | 35-40% | No | 0.030 | 7.58 | 8.69794377 | 30.70 |
| 6085503108 | 7894 | Santa Clara | 95125 | San Jose | -121.8737637 | 37.2835094 | 19.56 | 37.22 | 35-40% | No | 0.038 | 22.34 | 10.37 | 52.61 |
| 6075016200 | 2541 | San Francisco | 94102 | San Francisco | -122.4228856 | 37.777158 | 19.56 | 37.21 | 35-40% | No | 0.030 | 7.58 | 8.69794377 | 30.70 |
| 6073018518 | 3175 | San Diego | 92056 | Oceanside | -117.2916541 | 33.1897718 | 19.56 | 37.19 | 35-40% | No | 0.042 | 31.84 | 9.53630303 | 40.92 |
| 6037408723 | 2825 | Los Angeles | 91748 | Rowland Heights | -117.9008838 | 33.9780062 | 19.56 | 37.18 | 35-40% | No | 0.050 | 64.80 | 11.63 | 69.14 |
| 6059099502 | 598 | Orange | 90740 | Seal Beach | -118.0636903 | 33.7508498 | 19.56 | 37.17 | 35-40% | No | 0.044 | 40.49 | 11.21 | 66.23 |
| 6033000900 | 6059 | Lake | 95451 | Kelseyville | -122.7459162 | 38.9589037 | 19.54 | 37.15 | 35-40% | No | 0.040 | 25.87 | 4.50614746 | 1.86 |
| 6059063301 | 2941 | Orange | 92627 | Costa Mesa | -117.9169409 | 33.6368923 | 19.54 | 37.14 | 35-40% | No | 0.044 | 40.49 | 10.37 | 52.61 |
| 6065042004 | 3165 | Riverside | 92506 | Riverside | -117.3755877 | 33.8873245 | 19.54 | 37.13 | 35-40% | No | 0.062 | 91.10 | 12.47 | 83.99 |
| 6095251903 | 5308 | Solano | 94589 | Vallejo | -122.2282174 | 38.1478379 | 19.54 | 37.12 | 35-40% | No | 0.035 | 16.94 | 7.85958451 | 17.81 |
| 6071010421 | 6057 | San Bernardino | 92277 | Twentynine Palms | -116.0533058 | 34.1311448 | 19.53 | 37.10 | 35-40% | No | 0.062 | 91.10 | 4.92532709 | 2.32 |
| 6043000101 | 3929 | Mariposa | 95338 | Mariposa | -120.110972 | 37.5477768 | 19.53 | 37.09 | 35-40% | No | 0.057 | 82.10 | 8.69794377 | 30.70 |
| 6111005906 | 6695 | Ventura | 91361 | Westlake Village | -118.8610975 | 34.1532016 | 19.50 | 37.08 | 35-40% | No | 0.050 | 64.80 | 9.53630303 | 40.92 |
| 6085504411 | 5450 | Santa Clara | 95132 | San Jose | -121.864835 | 37.4161016 | 19.50 | 37.07 | 35-40% | No | 0.038 | 22.34 | 10.37 | 52.61 |
| 6037265202 | 3611 | Los Angeles | 90024 | Los Angeles | -118.4411825 | 34.0619002 | 19.50 | 37.05 | 35-40% | No | 0.046 | 53.02 | 12.05 | 81.66 |
| 6007000501 | 4333 | Butte | 95973 | Chico | -121.8867963 | 39.7376442 | 19.50 | 37.04 | 35-40% | No | 0.048 | 60.88 | 9.53630303 | 40.92 |
| 6037910716 | 6117 | Los Angeles | 93550 | Palmdale | -118.0731854 | 34.5463872 | 19.50 | 37.03 | 35-40% | No | 0.062 | 91.10 | 6.18286598 | 7.76 |
| 6013302010 | 10039 | Contra Costa | 94561 | Oakley | -121.7305372 | 37.9836864 | 19.49 | 37.02 | 35-40% | No | 0.042 | 31.84 | 7.85958451 | 17.81 |
| 6037108103 | 3256 | Los Angeles | 91326 | Porter Ranch | -118.5400017 | 34.2864236 | 19.48 | 37.00 | 35-40% | No | 0.060 | 85.21 | 10.37 | 52.61 |
| 6071010413 | 5979 | San Bernardino | 92256 | Morongo Valley | -116.4710167 | 34.077742 | 19.48 | 36.99 | 35-40% | No | 0.065 | 98.18 | 4.50614746 | 1.86 |
| 6065044907 | 4989 | Riverside | 92234 | Cathedral City | -116.4712229 | 33.8086237 | 19.48 | 36.98 | 35-40% | No | 0.068 | 100.00 | 7.02122524 | 10.74 |
| 6037463400 | 5752 | Los Angeles | 91107 | Pasadena | -118.1123757 | 34.1413741 | 19.47 | 36.97 | 35-40% | No | 0.053 | 73.93 | 10.79 | 54.48 |
| 6019005516 | 5527 | Fresno | 93720 | Fresno | -119.7636741 | 36.8703273 | 19.47 | 36.95 | 35-40% | No | 0.065 | 98.18 | 15.4 | 97.22 |
| 6013359203 | 6726 | Contra Costa | 94547 | Hercules | -122.2562999 | 38.0086578 | 19.47 | 36.94 | 35-40% | No | 0.033 | 11.08 | 7.85958451 | 17.81 |
| 6027000400 | 5668 | Inyo | 93514 | Bishop | -118.4055905 | 37.3648068 | 19.47 | 36.93 | 35-40% | No | 0.062 | 91.10 | 4.50614746 | 1.86 |
| 6037265520 | 4561 | Los Angeles | 90024 | Los Angeles | -118.4423998 | 34.0513698 | 19.46 | 36.92 | 35-40% | No | 0.046 | 53.02 | 12.05 | 81.66 |
| 6085504806 | 2930 | Santa Clara | 94089 | Sunnyvale | -122.0016057 | 37.3959254 | 19.46 | 36.90 | 35-40% | No | 0.035 | 16.94 | 10.37 | 52.61 |
| 6073014901 | 4243 | San Diego | 91941 | La Mesa | -117.0103336 | 32.7619814 | 19.45 | 36.89 | 35-40% | No | 0.044 | 40.49 | 11.21 | 66.23 |
| 6037271702 | 4134 | Los Angeles | 90034 | Los Angeles | -118.4259054 | 34.0251282 | 19.45 | 36.88 | 35-40% | No | 0.046 | 53.02 | 12.05 | 81.66 |
| 6037408503 | 6317 | Los Angeles | 91745 | Hacienda Heights | -117.9849873 | 33.9849218 | 19.43 | 36.86 | 35-40% | No | 0.048 | 60.88 | 12.05 | 81.66 |
| 6037910810 | 2765 | Los Angeles | 91390 | Santa Clarita | -118.3532786 | 34.4595477 | 19.43 | 36.85 | 35-40% | No | 0.060 | 85.21 | 8.27876414 | 20.16 |
| 6013331000 | 7013 | Contra Costa | 94519 | Concord | -122.01218 | 37.9762383 | 19.41 | 36.84 | 35-40% | No | 0.038 | 22.34 | 7.85958451 | 17.81 |
| 6001451504 | 1509 | Alameda | 94551 | Livermore | -121.7322556 | 37.6979083 | 19.39 | 36.83 | 35-40% | No | 0.040 | 25.87 | 8.69794377 | 30.70 |
| 6083002606 | 3344 | Santa Barbara | 93437 | Lompoc | -120.5566535 | 34.7122846 | 19.38 | 36.81 | 35-40% | No | 0.038 | 22.34 | 4.50614746 | 1.86 |
| 6073014002 | 4488 | San Diego | 91945 | Lemon Grove | -117.0195675 | 32.7249965 | 19.38 | 36.80 | 35-40% | No | 0.042 | 31.84 | 11.21 | 66.23 |
| 6001450603 | 4657 | Alameda | 94588 | Pleasanton | -121.9106268 | 37.6888608 | 19.38 | 36.79 | 35-40% | No | 0.038 | 22.34 | 8.69794377 | 30.70 |
| 6111007800 | 4119 | Ventura | 93065 | Simi Valley | -118.7744879 | 34.2700452 | 19.38 | 36.78 | 35-40% | No | 0.053 | 73.93 | 9.53630303 | 40.92 |
| 6037277000 | 5395 | Los Angeles | 90045 | Los Angeles | -118.4003336 | 33.9713675 | 19.37 | 36.76 | 35-40% | No | 0.046 | 53.02 | 12.05 | 81.66 |
| 6001450602 | 8722 | Alameda | 94588 | Pleasanton | -121.9128234 | 37.6706482 | 19.37 | 36.75 | 35-40% | No | 0.038 | 22.34 | 8.69794377 | 30.70 |
| 6059099417 | 4031 | Orange | 92649 | Huntington Beach | -118.0546457 | 33.7097532 | 19.37 | 36.74 | 35-40% | No | 0.044 | 40.49 | 11.21 | 66.23 |
| 6085504413 | 1714 | Santa Clara | 95035 | Milpitas | -121.9047132 | 37.4373171 | 19.36 | 36.73 | 35-40% | No | 0.035 | 16.94 | 10.37 | 52.61 |
| 6037300200 | 5546 | Los Angeles | 91214 | La Crescenta | -118.2386852 | 34.2283768 | 19.36 | 36.71 | 35-40% | No | 0.053 | 73.93 | 11.21 | 66.23 |
| 6085508504 | 7701 | Santa Clara | 94086 | Sunnyvale | -122.0203525 | 37.3624639 | 19.35 | 36.70 | 35-40% | No | 0.035 | 16.94 | 10.37 | 52.61 |
| 6059052524 | 7952 | Orange | 92782 | Tustin | -117.7970749 | 33.7298139 | 19.35 | 36.69 | 35-40% | No | 0.048 | 60.88 | 10.37 | 52.61 |
| 6073003213 | 4193 | San Diego | 92139 | San Diego | -117.0307834 | 32.688526 | 19.34 | 36.68 | 35-40% | No | 0.040 | 25.87 | 11.63 | 69.14 |
| 6059099225 | 3348 | Orange | 92708 | Fountain Valley | -117.9511573 | 33.7195163 | 19.34 | 36.66 | 35-40% | No | 0.044 | 40.49 | 10.79 | 54.48 |
| 6059110008 | 4374 | Orange | 90720 | Los Alamitos | -118.0798922 | 33.7799596 | 19.33 | 36.65 | 35-40% | No | 0.044 | 40.49 | 11.21 | 66.23 |
| 6075025403 | 4267 | San Francisco | 94110 | San Francisco | -122.4205619 | 37.7337691 | 19.33 | 36.64 | 35-40% | No | 0.030 | 7.58 | 8.69794377 | 30.70 |
| 6059011707 | 6045 | Orange | 92835 | Fullerton | -117.8756321 | 33.9045539 | 19.32 | 36.63 | 35-40% | No | 0.048 | 60.88 | 11.21 | 66.23 |
| 6037910707 | 4329 | Los Angeles | 93550 | Palmdale | -118.1037345 | 34.5504349 | 19.31 | 36.61 | 35-40% | No | 0.062 | 91.10 | 6.18286598 | 7.76 |
| 6065041912 | 5776 | Riverside | 92882 | Corona | -117.6361387 | 33.8732429 | 19.31 | 36.60 | 35-40% | No | 0.057 | 82.10 | 12.47 | 83.99 |
| 6037139502 | 3007 | Los Angeles | 91316 | Encino | -118.5263111 | 34.1628402 | 19.29 | 36.59 | 35-40% | No | 0.057 | 82.10 | 10.37 | 52.61 |
| 6059011715 | 6369 | Orange | 92870 | Placentia | -117.8528609 | 33.8823988 | 19.29 | 36.57 | 35-40% | No | 0.048 | 60.88 | 11.21 | 66.23 |
| 6073016702 | 6944 | San Diego | 92040 | Lakeside | -116.9338156 | 32.8444269 | 19.29 | 36.56 | 35-40% | No | 0.044 | 40.49 | 11.21 | 66.23 |
| 6053011303 | 3775 | Monterey | 93927 | Greenfield | -121.2767662 | 36.1770603 | 19.29 | 36.55 | 35-40% | No | 0.040 | 25.87 | 3.54086032 | 0.09 |
| 6089012000 | 4648 | Shasta | 96007 | Anderson | -122.2988508 | 40.4294831 | 19.28 | 36.54 | 35-40% | No | 0.046 | 53.02 | 6.18286598 | 7.76 |
| 6037920013 | 4306 | Los Angeles | 91350 | Santa Clarita | -118.521858 | 34.4298866 | 19.28 | 36.52 | 35-40% | No | 0.065 | 98.18 | 9.95548266 | 42.86 |
| 6037700901 | 3856 | Los Angeles | 90035 | Los Angeles | -118.3853968 | 34.064565 | 19.27 | 36.51 | 35-40% | No | 0.048 | 60.88 | 12.05 | 81.66 |
| 6073018611 | 8052 | San Diego | 92057 | Oceanside | -117.2644348 | 33.2819773 | 19.26 | 36.50 | 35-40% | No | 0.044 | 40.49 | 8.27876414 | 20.16 |
| 6017031200 | 5193 | El Dorado | 95667 | Placerville | -120.7839884 | 38.7183318 | 19.26 | 36.49 | 35-40% | No | 0.057 | 82.10 | 8.27876414 | 20.16 |
| 6113010602 | 5615 | Yolo | 95616 | Davis | -121.7359246 | 38.5482761 | 19.26 | 36.47 | 35-40% | No | 0.044 | 40.49 | 7.85958451 | 17.81 |
| 6073015601 | 5937 | San Diego | 92019 | El Cajon | -116.9264026 | 32.7921847 | 19.25 | 36.46 | 35-40% | No | 0.046 | 53.02 | 11.21 | 66.23 |
| 6037571000 | 5747 | Los Angeles | 90713 | Lakewood | -118.101621 | 33.8388435 | 19.25 | 36.45 | 35-40% | No | 0.044 | 40.49 | 11.21 | 66.23 |
| 6087123300 | 1741 | Santa Cruz | 95076 | Watsonville | -121.6753872 | 36.9339389 | 19.25 | 36.44 | 35-40% | No | 0.040 | 25.87 | 6.18286598 | 7.76 |
| 6071008800 | 6382 | San Bernardino | 92399 | Yucaipa | -117.0368248 | 34.033952 | 19.24 | 36.42 | 35-40% | No | 0.068 | 100.00 | 9.1171234 | 32.61 |
| 6085505700 | 5751 | Santa Clara | 95050 | Santa Clara | -121.9443765 | 37.3430376 | 19.24 | 36.41 | 35-40% | No | 0.035 | 16.94 | 10.37 | 52.61 |
| 6095252706 | 3844 | Solano | 94585 | Suisun City | -121.9778302 | 38.2580217 | 19.24 | 36.40 | 35-40% | No | 0.040 | 25.87 | 7.85958451 | 17.81 |
| 6037141400 | 4412 | Los Angeles | 91436 | Encino | -118.4760491 | 34.157489 | 19.22 | 36.39 | 35-40% | No | 0.055 | 77.87 | 11.21 | 66.23 |
| 6073014601 | 4795 | San Diego | 91941 | La Mesa | -117.0300534 | 32.7606911 | 19.22 | 36.37 | 35-40% | No | 0.042 | 31.84 | 11.21 | 66.23 |
| 6095252312 | 3368 | Solano | 94534 | Fairfield | -122.0561706 | 38.2753544 | 19.21 | 36.36 | 35-40% | No | 0.040 | 25.87 | 7.85958451 | 17.81 |
| 6111002901 | 5455 | Ventura | 93036 | Oxnard | -119.2067181 | 34.2260796 | 19.21 | 36.35 | 35-40% | No | 0.044 | 40.49 | 9.53630303 | 40.92 |
| 6071010021 | 6437 | San Bernardino | 92345 | Hesperia | -117.272407 | 34.4026561 | 19.20 | 36.33 | 35-40% | No | 0.065 | 98.18 | 7.85958451 | 17.81 |
| 6067004010 | 5131 | Sacramento | 95831 | Sacramento | -121.5206821 | 38.4876901 | 19.20 | 36.32 | 35-40% | No | 0.048 | 60.88 | 8.69794377 | 30.70 |
| 6075011800 | 1500 | San Francisco | 94108 | San Francisco | -122.4061645 | 37.7933506 | 19.20 | 36.31 | 35-40% | No | 0.030 | 7.58 | 8.69794377 | 30.70 |
| 6037554518 | 5435 | Los Angeles | 90703 | Cerritos | -118.0397288 | 33.8682287 | 19.19 | 36.30 | 35-40% | No | 0.046 | 53.02 | 11.21 | 66.23 |
| 6085505305 | 5514 | Santa Clara | 95051 | Santa Clara | -121.9905577 | 37.359077 | 19.19 | 36.28 | 35-40% | No | 0.035 | 16.94 | 10.37 | 52.61 |
| 6001450101 | 4349 | Alameda | 94568 | Dublin | -121.8851034 | 37.7050938 | 19.17 | 36.27 | 35-40% | No | 0.038 | 22.34 | 8.69794377 | 30.70 |
| 6073001300 | 6197 | San Diego | 92104 | San Diego | -117.1323173 | 32.7512721 | 19.16 | 36.26 | 35-40% | No | 0.040 | 25.87 | 10.37 | 52.61 |
| 6067007013 | 2779 | Sacramento | 95833 | Sacramento | -121.4912633 | 38.6249041 | 19.16 | 36.25 | 35-40% | No | 0.048 | 60.88 | 9.53630303 | 40.92 |
| 6037137401 | 4157 | Los Angeles | 91364 | Woodland Hills | -118.6102529 | 34.1590075 | 19.16 | 36.23 | 35-40% | No | 0.055 | 77.87 | 10.37 | 52.61 |
| 6067007428 | 3451 | Sacramento | 95842 | Sacramento | -121.3466005 | 38.6994816 | 19.15 | 36.22 | 35-40% | No | 0.051 | 69.23 | 8.69794377 | 30.70 |
| 6001403600 | 4482 | Alameda | 94610 | Oakland | -122.253492 | 37.8135127 | 19.15 | 36.21 | 35-40% | No | 0.030 | 7.58 | 8.69794377 | 30.70 |
| 6059110007 | 4799 | Orange | 90720 | Los Alamitos | -118.0863456 | 33.7860198 | 19.15 | 36.20 | 35-40% | No | 0.044 | 40.49 | 11.21 | 66.23 |
| 6001431100 | 3225 | Alameda | 94546 | Castro Valley | -122.0672947 | 37.6881143 | 19.14 | 36.18 | 35-40% | No | 0.033 | 11.08 | 8.69794377 | 30.70 |
| 6019004214 | 4978 | Fresno | 93711 | Fresno | -119.8536493 | 36.829804 | 19.14 | 36.17 | 35-40% | No | 0.060 | 85.21 | 15.4 | 97.22 |
| 6019006403 | 6304 | Fresno | 93633 | Kings Canyon Nationa | -118.8088099 | 36.8254036 | 19.14 | 36.16 | 35-40% | No | 0.065 | 98.18 | 10.37 | 52.61 |
| 6071000108 | 5077 | San Bernardino | 91709 | Chino Hills | -117.7402071 | 33.971427 | 19.14 | 36.15 | 35-40% | No | 0.055 | 77.87 | 12.89 | 92.89 |
| 6095252313 | 5065 | Solano | 94533 | Fairfield | -122.0262174 | 38.303698 | 19.13 | 36.13 | 35-40% | No | 0.040 | 25.87 | 7.85958451 | 17.81 |
| 6007003501 | 3222 | Butte | 95948 | Gridley | -121.7370059 | 39.3792483 | 19.13 | 36.12 | 35-40% | No | 0.050 | 64.80 | 8.27876414 | 20.16 |
| 6059074107 | 5512 | Orange | 92704 | Santa Ana | -117.8941216 | 33.6996552 | 19.13 | 36.11 | 35-40% | No | 0.046 | 53.02 | 10.37 | 52.61 |
| 6001423000 | 4396 | Alameda | 94703 | Berkeley | -122.2771352 | 37.8668441 | 19.13 | 36.10 | 35-40% | No | 0.030 | 7.58 | 8.69794377 | 30.70 |
| 6037901102 | 5557 | Los Angeles | 93536 | Lancaster | -118.2122942 | 34.6620629 | 19.12 | 36.08 | 35-40% | No | 0.062 | 91.10 | 6.18286598 | 7.76 |
| 6073015100 | 4769 | San Diego | 91942 | La Mesa | -116.9947059 | 32.7881451 | 19.12 | 36.07 | 35-40% | No | 0.044 | 40.49 | 11.21 | 66.23 |
| 6059011402 | 2325 | Orange | 92831 | Fullerton | -117.907682 | 33.880582 | 19.11 | 36.06 | 35-40% | No | 0.046 | 53.02 | 11.21 | 66.23 |
| 6065042716 | 5033 | Riverside | 92587 | Sun City | -117.2550898 | 33.6866739 | 19.11 | 36.04 | 35-40% | No | 0.060 | 85.21 | 10.79 | 54.48 |
| 6073019503 | 4795 | San Diego | 92083 | Vista | -117.2443918 | 33.1996277 | 19.10 | 36.03 | 35-40% | No | 0.044 | 40.49 | 9.53630303 | 40.92 |
| 6073003103 | 6256 | San Diego | 92114 | San Diego | -117.0441008 | 32.7070141 | 19.10 | 36.02 | 35-40% | No | 0.040 | 25.87 | 11.21 | 66.23 |
| 6037274202 | 4337 | Los Angeles | 90292 | Marina del Rey | -118.460713 | 33.9719816 | 19.10 | 36.01 | 35-40% | No | 0.046 | 53.02 | 12.05 | 81.66 |
| 6097153901 | 5421 | Sonoma | 95448 | Healdsburg | -122.8131351 | 38.6062691 | 19.08 | 35.99 | 35-40% | No | 0.035 | 16.94 | 8.4167793 | 20.20 |
| 6037700300 | 5623 | Los Angeles | 90069 | West Hollywood | -118.3720584 | 34.0918485 | 19.08 | 35.98 | 35-40% | No | 0.050 | 64.80 | 12.05 | 81.66 |
| 6037137502 | 4202 | Los Angeles | 91364 | Woodland Hills | -118.5976916 | 34.1634518 | 19.07 | 35.97 | 35-40% | No | 0.057 | 82.10 | 10.37 | 52.61 |
| 6059099604 | 3606 | Orange | 92647 | Huntington Beach | -118.0199636 | 33.7372031 | 19.07 | 35.96 | 35-40% | No | 0.044 | 40.49 | 11.21 | 66.23 |

| | | | | | | | | | | |
|---|---|---|---|---|---|---|---|---|---|---|
| 6033000702 | 4029 | Lake | 95457 | Lower Lake | -122.5917589 | 38.9857973 | 19.07 | 35.94 | 35-40% | No |
| 6037101300 | 4199 | Los Angeles | 91042 | Tujunga | -118.2709988 | 34.2487776 | 19.06 | 35.93 | 35-40% | No |
| 6071009717 | 4018 | San Bernardino | 92307 | Apple Valley | -117.2606458 | 34.5196207 | 19.05 | 35.92 | 35-40% | No |
| 6083002205 | 4997 | Santa Barbara | 93454 | Santa Maria | -120.4280342 | 34.9638747 | 19.04 | 35.91 | 35-40% | No |
| 6037431700 | 6433 | Los Angeles | 91007 | Arcadia | -118.0421452 | 34.1213014 | 19.04 | 35.89 | 35-40% | No |
| 6001435200 | 4140 | Alameda | 94541 | Hayward | -122.0517821 | 37.6874049 | 19.04 | 35.88 | 35-40% | No |
| 6113011001 | 6464 | Yolo | 95695 | Woodland | -121.7897061 | 38.673205 | 19.03 | 35.87 | 35-40% | No |
| 6001436000 | 4557 | Alameda | 94580 | San Lorenzo | -122.1375262 | 37.6691812 | 19.02 | 35.86 | 35-40% | No |
| 6037300600 | 8053 | Los Angeles | 91208 | Glendale | -118.2378916 | 34.2066236 | 19.02 | 35.84 | 35-40% | No |
| 6073002301 | 2821 | San Diego | 92115 | San Diego | -117.0947635 | 32.7573492 | 19.01 | 35.83 | 35-40% | No |
| 6037135202 | 4255 | Los Angeles | 91307 | West Hills | -118.6369084 | 34.1888179 | 19.01 | 35.82 | 35-40% | No |
| 6085512032 | 3389 | Santa Clara | 95119 | San Jose | -121.7823587 | 37.2327986 | 19.01 | 35.81 | 35-40% | No |
| 6001450743 | 4734 | Alameda | 94588 | Pleasanton | -121.8923831 | 37.6930366 | 19.01 | 35.79 | 35-40% | No |
| 6085505304 | 3265 | Santa Clara | 95051 | Santa Clara | -121.9814202 | 37.3595225 | 19.00 | 35.78 | 35-40% | No |
| 6073009604 | 3179 | San Diego | 92120 | San Diego | -117.0917261 | 32.7867685 | 19.00 | 35.77 | 35-40% | No |
| 6071000118 | 4541 | San Bernardino | 91709 | Chino Hills | -117.7824421 | 33.9791922 | 18.99 | 35.75 | 35-40% | No |
| 6067008127 | 4792 | Sacramento | 95621 | Citrus Heights | -121.3176091 | 38.7123178 | 18.99 | 35.74 | 35-40% | No |
| 6075016000 | 2465 | San Francisco | 94102 | San Francisco | -122.4224838 | 37.7823363 | 18.99 | 35.73 | 35-40% | No |
| 6071009713 | 7063 | San Bernardino | 92307 | Apple Valley | -117.1729656 | 34.5287444 | 18.99 | 35.72 | 35-40% | No |
| 6019004405 | 4040 | Fresno | 93720 | Fresno | -119.7743534 | 36.8587761 | 18.98 | 35.70 | 35-40% | No |
| 6037143603 | 2222 | Los Angeles | 91602 | North Hollywood | -118.3727317 | 34.1442858 | 18.98 | 35.69 | 35-40% | No |
| 6037462400 | 4229 | Los Angeles | 91104 | Pasadena | -118.1262387 | 34.1651965 | 18.96 | 35.68 | 35-40% | No |
| 6111004505 | 2150 | Ventura | 93033 | Oxnard | -119.1820508 | 34.1578571 | 18.96 | 35.67 | 35-40% | No |
| 6029005501 | 6275 | Kern | 93555 | Ridgecrest | -117.8250807 | 35.5740597 | 18.96 | 35.65 | 35-40% | No |
| 6073018511 | 5003 | San Diego | 92054 | Oceanside | -117.343109 | 33.204411 | 18.95 | 35.64 | 35-40% | No |
| 6023001200 | 4686 | Humboldt | 95550 | Korbel | -123.7462574 | 40.6845506 | 18.95 | 35.63 | 35-40% | No |
| 6059001102 | 3144 | Orange | 90631 | La Habra | -117.9722583 | 33.9340336 | 18.94 | 35.62 | 35-40% | No |
| 6071009710 | 7120 | San Bernardino | 92308 | Apple Valley | -117.198857 | 34.48581 | 18.93 | 35.60 | 35-40% | No |
| 6067009311 | 6407 | Sacramento | 95829 | Sacramento | -121.3529418 | 38.47288 | 18.93 | 35.59 | 35-40% | No |
| 6079010202 | 5491 | San Luis Obispo | 93446 | Paso Robles | -120.6302235 | 35.5983407 | 18.93 | 35.58 | 35-40% | No |
| 6037403320 | 5573 | Los Angeles | 91765 | Diamond Bar | -117.7963291 | 34.0052004 | 18.92 | 35.57 | 35-40% | No |
| 6037400900 | 4086 | Los Angeles | 91741 | Glendora | -117.8769191 | 34.1360086 | 18.92 | 35.55 | 35-40% | No |
| 6085512022 | 5374 | Santa Clara | 95123 | San Jose | -121.8108988 | 37.2552193 | 18.91 | 35.54 | 35-40% | No |
| 6073007600 | 5607 | San Diego | 92109 | San Diego | -117.2254607 | 32.7815696 | 18.91 | 35.53 | 35-40% | No |
| 6081601605 | 6189 | San Mateo | 94015 | Daly City | -122.469832 | 37.6569748 | 18.91 | 35.52 | 35-40% | No |
| 6095252911 | 4912 | Solano | 95687 | Vacaville | -121.9443944 | 38.3695164 | 18.91 | 35.50 | 35-40% | No |
| 6097151308 | 4796 | Sonoma | 94928 | Rohnert Park | -122.6998452 | 38.3562901 | 18.91 | 35.49 | 35-40% | No |
| 6067002300 | 3156 | Sacramento | 95818 | Sacramento | -121.4938311 | 38.5571708 | 18.89 | 35.48 | 35-40% | No |
| 6067009317 | 5700 | Sacramento | 95828 | Sacramento | -121.3784794 | 38.4645729 | 18.89 | 35.46 | 35-40% | No |
| 6061021401 | 2569 | Placer | 95648 | Lincoln | -121.2859939 | 38.8964967 | 18.89 | 35.45 | 35-40% | No |
| 6013330000 | 5353 | Contra Costa | 94519 | Concord | -122.026061 | 37.9886609 | 18.87 | 35.44 | 35-40% | No |
| 6067007209 | 3695 | Sacramento | 95673 | Rio Linda | -121.4478452 | 38.6910378 | 18.86 | 35.43 | 35-40% | No |
| 6065044515 | 3618 | Riverside | 92240 | Desert Hot Springs | -116.5112051 | 33.9373778 | 18.86 | 35.41 | 35-40% | No |
| 6073009510 | 5087 | San Diego | 92124 | San Diego | -117.109307 | 32.8171162 | 18.86 | 35.40 | 35-40% | No |
| 6023011000 | 4386 | Humboldt | 95540 | Fortuna | -124.1339756 | 40.562558 | 18.85 | 35.39 | 35-40% | No |
| 6067008130 | 3761 | Sacramento | 95842 | Sacramento | -121.3319454 | 38.6951232 | 18.85 | 35.38 | 35-40% | No |
| 6085500600 | 4586 | Santa Clara | 95126 | San Jose | -121.9145491 | 37.3334189 | 18.84 | 35.36 | 35-40% | No |
| 6029003812 | 4367 | Kern | 93312 | Bakersfield | -119.1027529 | 35.3706406 | 18.84 | 35.35 | 35-40% | No |
| 6073012304 | 3434 | San Diego | 91910 | Chula Vista | -117.0701179 | 32.6439929 | 18.84 | 35.34 | 35-40% | No |
| 6059032061 | 3349 | Orange | 92675 | San Juan Capistrano | -117.645955 | 33.5244496 | 18.84 | 35.33 | 35-40% | No |
| 6017031502 | 6031 | El Dorado | 95667 | Placerville | -120.8221616 | 38.6943173 | 18.84 | 35.31 | 35-40% | No |
| 6073009511 | 4427 | San Diego | 92124 | San Diego | -117.1085759 | 32.8036915 | 18.84 | 35.30 | 35-40% | No |
| 6037139701 | 4920 | Los Angeles | 91436 | Encino | -118.4954117 | 34.157429 | 18.83 | 35.29 | 35-40% | No |
| 6065043247 | 8838 | Riverside | 92596 | Winchester | -117.0863473 | 33.5571416 | 18.83 | 35.28 | 35-40% | No |
| 6067009308 | 6032 | Sacramento | 95624 | Elk Grove | -121.3819931 | 38.4166717 | 18.82 | 35.26 | 35-40% | No |
| 6085506305 | 7191 | Santa Clara | 95117 | San Jose | -121.9716416 | 37.3045269 | 18.81 | 35.25 | 35-40% | No |
| 6059042313 | 6471 | Orange | 92629 | Dana Point | -117.6973164 | 33.4622587 | 18.81 | 35.24 | 35-40% | No |
| 6075015900 | 4350 | San Francisco | 94115 | San Francisco | -122.4293428 | 37.78334 | 18.80 | 35.23 | 35-40% | No |
| 6037800504 | 2497 | Los Angeles | 90265 | Malibu | -118.6668993 | 34.0576239 | 18.80 | 35.21 | 35-40% | No |
| 6081610900 | 6932 | San Mateo | 94061 | Redwood City | -122.2320282 | 37.47659 | 18.79 | 35.20 | 35-40% | No |
| 6059099305 | 7143 | Orange | 92648 | Huntington Beach | -117.9932396 | 33.6793865 | 18.79 | 35.19 | 35-40% | No |
| 6009000220 | 5515 | Calaveras | 95252 | Valley Springs | -120.773333 | 38.1081725 | 18.78 | 35.17 | 35-40% | No |
| 6037910505 | 3064 | Los Angeles | 93550 | Palmdale | -118.1039305 | 34.5617295 | 18.78 | 35.16 | 35-40% | No |
| 6037265303 | 4523 | Los Angeles | 90024 | Los Angeles | -118.4534107 | 34.067274 | 18.77 | 35.15 | 35-40% | No |
| 6079012200 | 7024 | San Luis Obispo | 93445 | Oceano | -120.6157338 | 35.1052514 | 18.77 | 35.14 | 35-40% | No |
| 6037273700 | 2801 | Los Angeles | 90291 | Venice | -118.4526783 | 33.9983793 | 18.77 | 35.12 | 35-40% | No |
| 6059062800 | 4220 | Orange | 92661 | Newport Beach | -117.9129453 | 33.6045927 | 18.76 | 35.11 | 35-40% | No |
| 6037267402 | 4580 | Los Angeles | 90025 | Los Angeles | -118.4659262 | 34.042074 | 18.75 | 35.10 | 35-40% | No |
| 6111007901 | 5401 | Ventura | 93065 | Simi Valley | -118.7697289 | 34.2778958 | 18.75 | 35.09 | 35-40% | No |
| 6073017502 | 3641 | San Diego | 92024 | Encinitas | -117.2770112 | 33.0422361 | 18.74 | 35.07 | 35-40% | No |
| 6073017900 | 6958 | San Diego | 92008 | Carlsbad | -117.3445439 | 33.1595744 | 18.74 | 35.06 | 35-40% | No |
| 6085509404 | 6076 | Santa Clara | 94040 | Mountain View | -122.1055697 | 37.4018798 | 18.74 | 35.05 | 35-40% | No |
| 6059110102 | 5780 | Orange | 90623 | La Palma | -118.0450217 | 33.8418899 | 18.72 | 35.04 | 35-40% | No |
| 6093000400 | 652 | Siskiyou | 96044 | Hornbrook | -122.6348078 | 41.9466483 | 18.71 | 35.02 | 35-40% | No |
| 6111002600 | 3211 | Ventura | 93001 | Ventura | -119.2736531 | 34.2739342 | 18.71 | 35.01 | 35-40% | No |
| 6001441927 | 4103 | Alameda | 94538 | Fremont | -121.976577 | 37.5465021 | 18.70 | 35.00 | 30-35% | No |
| 6085512505 | 7295 | Santa Clara | 95020 | Gilroy | -121.5925135 | 37.0245262 | 18.68 | 34.99 | 30-35% | No |
| 6111006900 | 3520 | Ventura | 91360 | Thousand Oaks | -118.8826181 | 34.1878048 | 18.68 | 34.97 | 30-35% | No |
| 6037571101 | 4574 | Los Angeles | 90713 | Lakewood | -118.1162992 | 33.8432785 | 18.67 | 34.96 | 30-35% | No |
| 6059099233 | 3419 | Orange | 92708 | Fountain Valley | -117.9760616 | 33.7084651 | 18.67 | 34.95 | 30-35% | No |
| 6037403403 | 5140 | Los Angeles | 91789 | Walnut | -117.8406591 | 34.0332993 | 18.67 | 34.94 | 30-35% | No |
| 6013303202 | 7080 | Contra Costa | 94513 | Brentwood | -121.7147968 | 37.9422173 | 18.67 | 34.92 | 30-35% | No |
| 6061021802 | 5676 | Placer | 95602 | Auburn | -121.0601198 | 38.9479978 | 18.67 | 34.91 | 30-35% | No |
| 6077004307 | 3753 | San Joaquin | 95240 | Lodi | -121.2845139 | 38.1084701 | 18.67 | 34.90 | 30-35% | No |
| 6013363000 | 7043 | Contra Costa | 94803 | El Sobrante | -122.3086599 | 37.9788936 | 18.65 | 34.88 | 30-35% | No |
| 6071010023 | 5949 | San Bernardino | 92345 | Hesperia | -117.3347273 | 34.3822831 | 18.65 | 34.87 | 30-35% | No |
| 6071009107 | 7272 | San Bernardino | 92372 | Pinon Hills | -117.6219589 | 34.4425196 | 18.65 | 34.86 | 30-35% | No |
| 6083002304 | 6687 | Santa Barbara | 93458 | Santa Maria | -120.444653 | 34.9568972 | 18.64 | 34.85 | 30-35% | No |
| 6075031302 | 5495 | San Francisco | 94132 | San Francisco | -122.467097 | 37.7133955 | 18.64 | 34.83 | 30-35% | No |
| 6113010312 | 5130 | Yolo | 95691 | West Sacramento | -121.552211 | 38.5444338 | 18.64 | 34.82 | 30-35% | No |
| 6113011300 | 8106 | Yolo | 95694 | Winters | -122.0245787 | 38.5786038 | 18.64 | 34.81 | 30-35% | No |
| 6059099602 | 3196 | Orange | 92683 | Westminster | -118.0200958 | 33.7516672 | 18.63 | 34.80 | 30-35% | No |
| 6037573902 | 2091 | Los Angeles | 90808 | Long Beach | -118.0775765 | 33.8135353 | 18.62 | 34.78 | 30-35% | No |
| 6073013414 | 7227 | San Diego | 91910 | Chula Vista | -117.0127578 | 32.6311503 | 18.61 | 34.77 | 30-35% | No |
| 6073006000 | 3536 | San Diego | 92103 | San Diego | -117.164543 | 32.7360508 | 18.61 | 34.76 | 30-35% | No |
| 6071009202 | 2295 | San Bernardino | 92358 | Lytle Creek | -117.5413331 | 34.266609 | 18.61 | 34.75 | 30-35% | No |
| 6065044931 | 2327 | Riverside | 92234 | Cathedral City | -116.449434 | 33.8196032 | 18.60 | 34.73 | 30-35% | No |
| 6037700802 | 4069 | Los Angeles | 90211 | Beverly Hills | -118.3820778 | 34.0684232 | 18.59 | 34.72 | 30-35% | No |
| 6001433500 | 4352 | Alameda | 94579 | San Leandro | -122.1553145 | 37.6845009 | 18.59 | 34.71 | 30-35% | No |
| 6037920031 | 5301 | Los Angeles | 91321 | Newhall | -118.4836342 | 34.3992407 | 18.59 | 34.70 | 30-35% | No |
| 6007002300 | 5331 | Butte | 95965 | Oroville | -121.5902502 | 39.6722796 | 18.59 | 34.68 | 30-35% | No |
| 6065049100 | 5264 | Riverside | 92201 | Indio | -116.231707 | 33.6927812 | 18.58 | 34.67 | 30-35% | No |
| 6075010100 | 3739 | San Francisco | 94133 | San Francisco | -122.4085794 | 37.8084198 | 18.57 | 34.66 | 30-35% | No |
| 6029006003 | 5580 | Kern | 93561 | Tehachapi | -118.4817279 | 35.139486 | 18.56 | 34.64 | 30-35% | No |
| 6037930401 | 2471 | Los Angeles | 91367 | Woodland Hills | -118.6298536 | 34.1674127 | 18.56 | 34.63 | 30-35% | No |
| 6067008007 | 3151 | Sacramento | 95628 | Fair Oaks | -121.2821976 | 38.6582631 | 18.56 | 34.62 | 30-35% | No |
| 6037297400 | 3603 | Los Angeles | 90732 | San Pedro | -118.3228117 | 33.7208388 | 18.55 | 34.61 | 30-35% | No |
| 6055201006 | 3283 | Napa | 94503 | American Canyon | -122.2604602 | 38.1711971 | 18.55 | 34.59 | 30-35% | No |
| 6001400500 | 3517 | Alameda | 94609 | Oakland | -122.2647445 | 37.8485167 | 18.55 | 34.58 | 30-35% | No |
| 6073008701 | 3361 | San Diego | 92111 | San Diego | -117.1638831 | 32.7980374 | 18.54 | 34.57 | 30-35% | No |
| 6111008001 | 3331 | Ventura | 93065 | Simi Valley | -118.753251 | 34.2699733 | 18.53 | 34.56 | 30-35% | No |
| 6081601100 | 5716 | San Mateo | 94015 | Daly City | -122.489464 | 37.6922564 | 18.53 | 34.54 | 30-35% | No |
| 6065941200 | 2205 | Riverside | 92262 | Palm Springs | -116.5019562 | 33.8376004 | 18.52 | 34.53 | 30-35% | No |
| 6075026004 | 4315 | San Francisco | 94112 | San Francisco | -122.4357008 | 37.7178905 | 18.51 | 34.52 | 30-35% | No |
| 6037271300 | 4506 | Los Angeles | 90064 | Los Angeles | -118.4413454 | 34.0259653 | 18.51 | 34.51 | 30-35% | No |
| 6067007414 | 4317 | Sacramento | 95660 | North Highlands | -121.3583148 | 38.6881636 | 18.51 | 34.49 | 30-35% | No |
| 6037480011 | 5132 | Los Angeles | 91775 | San Gabriel | -118.0762455 | 34.1261899 | 18.50 | 34.48 | 30-35% | No |
| 6071000115 | 7114 | San Bernardino | 91708 | Chino | -117.6752707 | 33.9605922 | 18.50 | 34.47 | 30-35% | No |
| 6037503703 | 7876 | Los Angeles | 90638 | La Mirada | -117.9857888 | 33.9096825 | 18.49 | 34.46 | 30-35% | No |
| 6073016615 | 3059 | San Diego | 92071 | Santee | -116.9795653 | 32.8477575 | 18.48 | 34.44 | 30-35% | No |
| 6111007512 | 5355 | Ventura | 93063 | Simi Valley | -118.696862 | 34.2454855 | 18.47 | 34.43 | 30-35% | No |
| 6085500500 | 5275 | Santa Clara | 95126 | San Jose | -121.9279383 | 37.3299649 | 18.46 | 34.42 | 30-35% | No |
| 6037181500 | 3812 | Los Angeles | 90041 | Los Angeles | -118.1928507 | 34.1347808 | 18.46 | 34.41 | 30-35% | No |
| 6075010300 | 3852 | San Francisco | 94133 | San Francisco | -122.4156811 | 37.8016201 | 18.46 | 34.39 | 30-35% | No |
| 6037554513 | 2507 | Los Angeles | 90703 | Cerritos | -118.0681112 | 33.8836153 | 18.45 | 34.38 | 30-35% | No |
| 6079010300 | 10043 | San Luis Obispo | 93461 | Shandon | -120.367815 | 35.619857 | 18.45 | 34.37 | 30-35% | No |
| 6073018514 | 7947 | San Diego | 92057 | Oceanside | -117.2924241 | 33.2318552 | 18.45 | 34.35 | 30-35% | No |
| 6067007421 | 9003 | Sacramento | 95843 | Antelope | -121.3347764 | 38.7155123 | 18.45 | 34.34 | 30-35% | No |
| 6037271902 | 3877 | Los Angeles | 90066 | Los Angeles | -118.4316771 | 34.0096289 | 18.44 | 34.33 | 30-35% | No |
| 6041106001 | 4048 | Marin | 94903 | San Rafael | -122.5138443 | 38.0317512 | 18.43 | 34.32 | 30-35% | No |
| 6005000102 | 1867 | Amador | 95666 | Pioneer | -120.2562561 | 38.5394172 | 18.41 | 34.30 | 30-35% | No |
| 6061020401 | 2129 | Placer | 95603 | Auburn | -121.0770752 | 38.8923191 | 18.41 | 34.29 | 30-35% | No |
| 6071009711 | 9401 | San Bernardino | 92308 | Apple Valley | -117.2312048 | 34.4870247 | 18.40 | 34.28 | 30-35% | No |
| 6085512020 | 6858 | Santa Clara | 95136 | San Jose | -121.8361097 | 37.2720223 | 18.39 | 34.27 | 30-35% | No |
| 6067005403 | 2224 | Sacramento | 95825 | Sacramento | -121.4150189 | 38.5663033 | 18.38 | 34.25 | 30-35% | No |
| 6067003300 | 4073 | Sacramento | 95822 | Sacramento | -121.5039421 | 38.5289945 | 18.38 | 34.24 | 30-35% | No |
| 6067005606 | 4029 | Sacramento | 95864 | Sacramento | -121.3922087 | 38.5813575 | 18.37 | 34.23 | 30-35% | No |
| 6075060700 | 9083 | San Francisco | 94158 | San Francisco | -122.3906714 | 37.7723808 | 18.37 | 34.22 | 30-35% | No |
| 6007000202 | 3723 | Butte | 95973 | Chico | -121.849496 | 39.7638564 | 18.37 | 34.20 | 30-35% | No |
| 6059052415 | 3944 | Orange | 92630 | Lake Forest | -117.6944778 | 33.6397121 | 18.37 | 34.19 | 30-35% | No |
| 6037134905 | 2819 | Los Angeles | 91371 | Woodland Hills | -118.5842954 | 34.1833588 | 18.36 | 34.18 | 30-35% | No |
| 6073016901 | 6909 | San Diego | 92040 | Lakeside | -116.9470083 | 32.9015716 | 18.36 | 34.17 | 30-35% | No |
| 6013359104 | 1932 | Contra Costa | 94547 | Hercules | -122.2781134 | 38.0094814 | 18.35 | 34.15 | 30-35% | No |
| 6037571800 | 3190 | Los Angeles | 90807 | Long Beach | -118.1970981 | 33.8334835 | 18.35 | 34.14 | 30-35% | No |
| 6029003803 | 4769 | Kern | 93314 | Bakersfield | -119.1994667 | 35.4121942 | 18.33 | 34.13 | 30-35% | No |
| 6085509107 | 4892 | Santa Clara | 94086 | Sunnyvale | -122.0565449 | 37.3796214 | 18.32 | 34.12 | 30-35% | No |
| 6037910705 | 11415 | Los Angeles | 93552 | Palmdale | -118.0173147 | 34.5697025 | 18.32 | 34.10 | 30-35% | No |
| 6085504320 | 2903 | Santa Clara | 95132 | San Jose | -121.8714503 | 37.4027856 | 18.32 | 34.09 | 30-35% | No |
| 6037403304 | 5178 | Los Angeles | 91789 | Walnut | -117.851172 | 33.9883072 | 18.31 | 34.08 | 30-35% | No |
| 6001441301 | 3179 | Alameda | 94536 | Fremont | -122.0026581 | 37.5717252 | 18.30 | 34.06 | 30-35% | No |
| 6067007906 | 3525 | Sacramento | 95608 | Carmichael | -121.3197237 | 38.6425987 | 18.30 | 34.05 | 30-35% | No |
| 6059001601 | 7989 | Orange | 92835 | Fullerton | -117.9223018 | 33.9022199 | 18.30 | 34.04 | 30-35% | No |
| 6073008358 | 6554 | San Diego | 92126 | San Diego | -117.1335089 | 32.9099606 | 18.29 | 34.03 | 30-35% | No |
| 6071002010 | 9013 | San Bernardino | 92336 | Fontana | -117.4693948 | 34.1610731 | 18.29 | 34.01 | 30-35% | No |
| 6037462500 | 6039 | Los Angeles | 91104 | Pasadena | -118.1005901 | 34.1655638 | 18.29 | 34.00 | 30-35% | No |
| 6085503509 | 4040 | Santa Clara | 95127 | San Jose | -121.801472 | 37.3487217 | 18.29 | 33.99 | 30-35% | No |
| 6081601902 | 5639 | San Mateo | 94080 | South San Francisco | -122.4372438 | 37.6604839 | 18.28 | 33.98 | 30-35% | No |
| 6073019405 | 3592 | San Diego | 92083 | Vista | -117.2759939 | 33.1965648 | 18.28 | 33.96 | 30-35% | No |
| 6001400600 | 1571 | Alameda | 94609 | Oakland | -122.2648882 | 37.8419909 | 18.28 | 33.95 | 30-35% | No |
| 6111008002 | 4827 | Ventura | 93063 | Simi Valley | -118.7273774 | 34.2682522 | 18.27 | 33.94 | 30-35% | No |
| 6053014700 | 6620 | Monterey | 95012 | Castroville | -121.7100142 | 36.7998783 | 18.27 | 33.93 | 30-35% | No |
| 6111004101 | 6814 | Ventura | 93033 | Oxnard | -119.1819133 | 34.1676376 | 18.27 | 33.91 | 30-35% | No |
| 6037571503 | 3700 | Los Angeles | 90807 | Long Beach | -118.1705772 | 33.8481676 | 18.26 | 33.90 | 30-35% | No |
| 6073002702 | 5180 | San Diego | 92115 | San Diego | -117.0728017 | 32.7542098 | 18.26 | 33.89 | 30-35% | No |
| 6059001403 | 3239 | Orange | 92821 | Brea | -117.9199423 | 33.9392818 | 18.24 | 33.88 | 30-35% | No |
| 6037401902 | 5711 | Los Angeles | 91711 | Claremont | -117.7249135 | 34.1011641 | 18.24 | 33.86 | 30-35% | No |
| 6059011709 | 4355 | Orange | 92870 | Placentia | -117.8612771 | 33.9025381 | 18.23 | 33.85 | 30-35% | No |
| 6037273402 | 3172 | Los Angeles | 90291 | Venice | -118.4792291 | 33.991782 | 18.23 | 33.84 | 30-35% | No |
| 6085511911 | 4806 | Santa Clara | 95120 | San Jose | -121.8096939 | 37.1974738 | 18.22 | 33.83 | 30-35% | No |
| 6065941400 | 3179 | Riverside | 92262 | Palm Springs | -116.5369013 | 33.8231245 | 18.22 | 33.81 | 30-35% | No |
| 6037106641 | 2317 | Los Angeles | 91344 | Granada Hills | -118.5084331 | 34.2984691 | 18.22 | 33.80 | 30-35% | No |
| 6037113211 | 3787 | Los Angeles | 91311 | Chatsworth | -118.6227865 | 34.2674995 | 18.22 | 33.79 | 30-35% | No |
| 6111003802 | 2888 | Ventura | 93033 | Oxnard | -119.1816278 | 34.1781865 | 18.22 | 33.77 | 30-35% | No |
| 6087100200 | 7071 | Santa Cruz | 95062 | Santa Cruz | -122.0105554 | 36.9847446 | 18.21 | 33.76 | 30-35% | No |
| 6043000102 | 2719 | Mariposa | 95306 | Catheys Valley | -120.0838974 | 37.3724477 | 18.21 | 33.75 | 30-35% | No |
| 6111005503 | 3336 | Ventura | 93010 | Camarillo | -119.0596989 | 34.2274729 | 18.20 | 33.74 | 30-35% | No |
| 6073009603 | 4533 | San Diego | 92108 | San Diego | -117.1067006 | 32.7859743 | 18.20 | 33.72 | 30-35% | No |
| 6071010412 | 7720 | San Bernardino | 92284 | Yucca Valley | -116.3943701 | 34.1033728 | 18.20 | 33.71 | 30-35% | No |
| 6059052518 | 2688 | Orange | 92618 | Irvine | -117.7578575 | 33.6593645 | 18.20 | 33.70 | 30-35% | No |
| 6073019905 | 4256 | San Diego | 92081 | Vista | -117.2317331 | 33.1575866 | 18.18 | 33.69 | 30-35% | No |
| 6073019303 | 6538 | San Diego | 92084 | Vista | -117.2567952 | 33.2415689 | 18.18 | 33.67 | 30-35% | No |
| 6045011700 | 4181 | Mendocino | 95482 | Ukiah | -123.1105871 | 39.1624023 | 18.17 | 33.66 | 30-35% | No |
| 6073003214 | 4610 | San Diego | 91977 | Spring Valley | -117.0201686 | 32.6944869 | 18.17 | 33.65 | 30-35% | No |
| 6037901010 | 5913 | Los Angeles | 93536 | Lancaster | -118.196362 | 34.6667155 | 18.15 | 33.64 | 30-35% | No |
| 6037430302 | 5837 | Los Angeles | 91016 | Monrovia | -118.0038011 | 34.153182 | 18.15 | 33.62 | 30-35% | No |
| 6001451202 | 3634 | Alameda | 94551 | Livermore | -121.7689116 | 37.7347438 | 18.15 | 33.61 | 30-35% | No |
| 6085505401 | 5957 | Santa Clara | 95051 | Santa Clara | -121.9871421 | 37.3489609 | 18.15 | 33.60 | 30-35% | No |
| 6071002029 | 6077 | San Bernardino | 91701 | Rancho Cucamonga | -117.5671177 | 34.1309473 | 18.14 | 33.59 | 30-35% | No |
| 6065043007 | 6811 | Riverside | 92883 | Corona | -117.4191978 | 33.7167372 | 18.13 | 33.57 | 30-35% | No |
| 6027000500 | 2568 | Inyo | 93526 | Independence | -117.9007638 | 36.9449466 | 18.13 | 33.56 | 30-35% | No |

| | | | | | | | | | | | | | | |
|---|---|---|---|---|---|---|---|---|---|---|---|---|---|---|
| 6089012702 | 3083 | Shasta | 96016 | Cassel | -121.4437132 | 40.9204305 | 18.01 | 33.16 | 30-35% | No | 0.048 | 60.88 | 5.31011087 | 2.59 |
| 6065041913 | 5478 | Riverside | 92882 | Corona | -117.6207099 | 33.8647692 | 18.00 | 33.14 | 30-35% | No | 0.057 | 82.10 | 12.47 | 83.99 |
| 6067004006 | 4843 | Sacramento | 95831 | Sacramento | -121.5248769 | 38.5072046 | 18.00 | 33.13 | 30-35% | No | 0.048 | 60.88 | 9.1171234 | 32.61 |
| 6059099407 | 2480 | Orange | 92649 | Huntington Beach | -118.0283992 | 33.7225855 | 17.99 | 33.12 | 30-35% | No | 0.044 | 40.49 | 11.21 | 66.23 |
| 6037108101 | 2230 | Los Angeles | 91326 | Porter Ranch | -118.5416524 | 34.2793058 | 17.99 | 33.11 | 30-35% | No | 0.060 | 85.21 | 10.37 | 52.61 |
| 6111002102 | 1832 | Ventura | 93001 | Ventura | -119.2882052 | 34.2871365 | 17.98 | 33.09 | 30-35% | No | 0.046 | 53.02 | 9.53630303 | 40.92 |
| 6059011708 | 4317 | Orange | 92831 | Fullerton | -117.8784328 | 33.8931393 | 17.98 | 33.08 | 30-35% | No | 0.048 | 60.88 | 11.21 | 66.23 |
| 6037139600 | 4633 | Los Angeles | 91316 | Encino | -118.5101001 | 34.1640599 | 17.97 | 33.07 | 30-35% | No | 0.057 | 82.10 | 10.37 | 52.61 |
| 6037271600 | 4475 | Los Angeles | 90066 | Los Angeles | -118.4304607 | 34.0210549 | 17.97 | 33.06 | 30-35% | No | 0.046 | 53.02 | 12.05 | 81.66 |
| 6085503116 | 5240 | Santa Clara | 95136 | San Jose | -121.8537835 | 37.2774532 | 17.97 | 33.04 | 30-35% | No | 0.038 | 22.34 | 10.37 | 52.61 |
| 6111003609 | 5966 | Ventura | 93035 | Oxnard | -119.234767 | 34.1870831 | 17.96 | 33.03 | 30-35% | No | 0.044 | 40.49 | 9.53630303 | 40.92 |
| 6065044804 | 2850 | Riverside | 92264 | Palm Springs | -116.5037759 | 33.8100915 | 17.95 | 33.02 | 30-35% | No | 0.068 | 100.00 | 7.02122524 | 10.74 |
| 6065044516 | 6606 | Riverside | 92240 | Desert Hot Springs | -116.475985 | 33.9393724 | 17.93 | 33.01 | 30-35% | No | 0.068 | 100.00 | 5.76368635 | 4.73 |
| 6073021206 | 2995 | San Diego | 91901 | Alpine | -116.7519581 | 32.8647039 | 17.93 | 32.99 | 30-35% | No | 0.057 | 82.10 | 11.63 | 69.14 |
| 6037401303 | 2199 | Los Angeles | 91773 | San Dimas | -117.8250298 | 34.0712985 | 17.93 | 32.98 | 30-35% | No | 0.057 | 82.10 | 11.63 | 69.14 |
| 6089011100 | 3096 | Shasta | 96001 | Redding | -122.369751 | 40.5222011 | 17.92 | 32.97 | 30-35% | No | 0.042 | 31.84 | 6.18286598 | 7.76 |
| 6065041808 | 6852 | Riverside | 92882 | Corona | -117.5718819 | 33.8472672 | 17.92 | 32.95 | 30-35% | No | 0.060 | 85.21 | 12.89 | 92.89 |
| 6073006600 | 1920 | San Diego | 92110 | San Diego | -117.2061684 | 32.745617 | 17.92 | 32.94 | 30-35% | No | 0.040 | 25.87 | 10.79 | 54.48 |
| 6097150609 | 4465 | Sonoma | 94954 | Petaluma | -122.6438313 | 38.2600055 | 17.92 | 32.93 | 30-35% | No | 0.033 | 11.08 | 6.18286598 | 7.76 |
| 6073019502 | 5715 | San Diego | 92084 | Vista | -117.2406651 | 33.207787 | 17.91 | 32.92 | 30-35% | No | 0.044 | 40.49 | 9.53630303 | 40.92 |
| 6037650701 | 2521 | Los Angeles | 90503 | Torrance | -118.3529869 | 33.8317827 | 17.91 | 32.90 | 30-35% | No | 0.042 | 31.84 | 12.05 | 81.66 |
| 6017031600 | 4126 | El Dorado | 96150 | South Lake Tahoe | -119.9388297 | 38.9436744 | 17.90 | 32.89 | 30-35% | No | 0.053 | 73.93 | 3.6677882 | 0.31 |
| 6081601700 | 4286 | San Mateo | 94080 | South San Francisco | -122.4559183 | 37.6629478 | 17.88 | 32.88 | 30-35% | No | 0.030 | 7.58 | 8.69794377 | 30.70 |
| 6037901011 | 5069 | Los Angeles | 93536 | Lancaster | -118.1722433 | 34.6708476 | 17.88 | 32.87 | 30-35% | No | 0.062 | 91.10 | 6.18286598 | 7.76 |
| 6073020019 | 6832 | San Diego | 92078 | San Marcos | -117.2174731 | 33.1321296 | 17.87 | 32.85 | 30-35% | No | 0.044 | 40.49 | 9.95548266 | 42.86 |
| 6067009502 | 7055 | Sacramento | 95632 | Galt | -121.3246535 | 38.2668947 | 17.86 | 32.84 | 30-35% | No | 0.046 | 53.02 | 9.53630303 | 40.92 |
| 6065041810 | 5665 | Riverside | 92881 | Corona | -117.5489863 | 33.8446168 | 17.85 | 32.83 | 30-35% | No | 0.060 | 85.21 | 12.89 | 92.89 |
| 6071002035 | 6874 | San Bernardino | 91730 | Rancho Cucamonga | -117.5626734 | 34.1202031 | 17.85 | 32.82 | 30-35% | No | 0.065 | 98.18 | 12.89 | 92.89 |
| 6073016802 | 6942 | San Diego | 92021 | El Cajon | -116.8418297 | 32.8701471 | 17.85 | 32.80 | 30-35% | No | 0.051 | 69.23 | 11.21 | 66.23 |
| 6065044926 | 4665 | Riverside | 92234 | Cathedral City | -116.4690836 | 33.819638 | 17.85 | 32.79 | 30-35% | No | 0.068 | 100.00 | 7.02122524 | 10.74 |
| 6059063907 | 6994 | Orange | 92626 | Costa Mesa | -117.9036273 | 33.6925273 | 17.84 | 32.78 | 30-35% | No | 0.044 | 40.49 | 10.37 | 52.61 |
| 6071002018 | 5342 | San Bernardino | 91737 | Rancho Cucamonga | -117.5845687 | 34.143308 | 17.83 | 32.77 | 30-35% | No | 0.065 | 98.18 | 12.47 | 83.99 |
| 6111003801 | 5778 | Ventura | 93033 | Oxnard | -119.1833977 | 34.1860972 | 17.83 | 32.75 | 30-35% | No | 0.044 | 40.49 | 9.53630303 | 40.92 |
| 6071008402 | 6448 | San Bernardino | 92374 | Redlands | -117.1476465 | 34.0628653 | 17.82 | 32.74 | 30-35% | No | 0.068 | 100.00 | 11.21 | 66.23 |
| 6073009304 | 7944 | San Diego | 92108 | San Diego | -117.1371758 | 32.773662 | 17.82 | 32.73 | 30-35% | No | 0.042 | 31.84 | 10.37 | 52.61 |
| 6073018614 | 6494 | San Diego | 92058 | Oceanside | -117.3318904 | 33.2306185 | 17.82 | 32.72 | 30-35% | No | 0.042 | 31.84 | 8.69794377 | 30.70 |
| 6073016401 | 4996 | San Diego | 92021 | El Cajon | -116.9270232 | 32.8141917 | 17.82 | 32.70 | 30-35% | No | 0.046 | 53.02 | 11.21 | 66.23 |
| 6109003100 | 6433 | Tuolumne | 95335 | Long Barn | -119.849589 | 38.1866222 | 17.81 | 32.69 | 30-35% | No | 0.055 | 77.87 | 5.02101188 | 2.36 |
| 6087100300 | 3380 | Santa Cruz | 95060 | Santa Cruz | -122.0424812 | 36.9946098 | 17.80 | 32.68 | 30-35% | No | 0.035 | 16.94 | 9.53630303 | 40.92 |
| 6065041806 | 4255 | Riverside | 92882 | Corona | -117.5871952 | 33.8513313 | 17.80 | 32.66 | 30-35% | No | 0.057 | 82.10 | 12.89 | 92.89 |
| 6085512053 | 4534 | Santa Clara | 95123 | San Jose | -121.8534641 | 37.2436327 | 17.80 | 32.65 | 30-35% | No | 0.038 | 22.34 | 10.37 | 52.61 |
| 6075026200 | 7564 | San Francisco | 94112 | San Francisco | -122.4539535 | 37.7113172 | 17.79 | 32.64 | 30-35% | No | 0.030 | 7.58 | 8.27876414 | 20.16 |
| 6037408626 | 4341 | Los Angeles | 91748 | Rowland Heights | -117.9197398 | 33.9850726 | 17.79 | 32.63 | 30-35% | No | 0.050 | 64.80 | 11.63 | 69.14 |
| 6073020404 | 5070 | San Diego | 92029 | Escondido | -117.1011559 | 33.0970653 | 17.77 | 32.61 | 30-35% | No | 0.048 | 60.88 | 10.37 | 52.61 |
| 6073019302 | 7344 | San Diego | 92056 | Oceanside | -117.2762264 | 33.2179749 | 17.76 | 32.60 | 30-35% | No | 0.042 | 31.84 | 9.53630303 | 40.92 |
| 6001443301 | 4074 | Alameda | 94539 | Fremont | -121.9128679 | 37.4707218 | 17.76 | 32.59 | 30-35% | No | 0.035 | 16.94 | 9.95548266 | 42.86 |
| 6097151000 | 3483 | Sonoma | 94952 | Petaluma | -122.6798743 | 38.2576575 | 17.76 | 32.58 | 30-35% | No | 0.033 | 11.08 | 6.18286598 | 7.76 |
| 6085512039 | 4784 | Santa Clara | 95138 | San Jose | -121.7864708 | 37.2489527 | 17.76 | 32.56 | 30-35% | No | 0.038 | 22.34 | 10.37 | 52.61 |
| 6029000909 | 2406 | Kern | 93306 | Bakersfield | -118.9394252 | 35.389903 | 17.75 | 32.55 | 30-35% | No | 0.062 | 91.10 | 19.18 | 99.86 |
| 6065042217 | 5461 | Riverside | 92506 | Riverside | -117.3222402 | 33.9278407 | 17.74 | 32.54 | 30-35% | No | 0.065 | 98.18 | 12.47 | 83.99 |
| 6085503803 | 4477 | Santa Clara | 95133 | San Jose | -121.8497165 | 37.383627 | 17.73 | 32.53 | 30-35% | No | 0.038 | 22.34 | 10.37 | 52.61 |
| 6065045222 | 1595 | Riverside | 92236 | Coachella | -116.1809844 | 33.725974 | 17.73 | 32.51 | 30-35% | No | 0.062 | 91.10 | 8.27876414 | 20.16 |
| 6059001708 | 3786 | Orange | 92833 | Fullerton | -117.9505071 | 33.9054515 | 17.73 | 32.50 | 30-35% | No | 0.046 | 53.02 | 11.21 | 66.23 |
| 6081601000 | 6913 | San Mateo | 94015 | Daly City | -122.4929574 | 37.6727192 | 17.73 | 32.49 | 30-35% | No | 0.030 | 7.58 | 8.27876414 | 20.16 |
| 6019005515 | 1653 | Fresno | 93619 | Clovis | -119.689719 | 36.9247612 | 17.72 | 32.48 | 30-35% | No | 0.065 | 98.18 | 15.4 | 97.22 |
| 6067001500 | 4329 | Sacramento | 95816 | Sacramento | -121.4593774 | 38.5674597 | 17.71 | 32.46 | 30-35% | No | 0.048 | 60.88 | 9.53630303 | 40.92 |
| 6073014804 | 4351 | San Diego | 91942 | La Mesa | -117.031084 | 32.786443 | 17.70 | 32.45 | 30-35% | No | 0.044 | 40.49 | 10.79 | 54.48 |
| 6001432100 | 3770 | Alameda | 94577 | San Leandro | -122.1466229 | 37.7358429 | 17.70 | 32.44 | 30-35% | No | 0.030 | 7.58 | 8.69794377 | 30.70 |
| 6037574201 | 3117 | Los Angeles | 90815 | Long Beach | -118.1276554 | 33.8039339 | 17.69 | 32.43 | 30-35% | No | 0.042 | 31.84 | 11.21 | 66.23 |
| 6085513500 | 1144 | Santa Clara | 95037 | Morgan Hill | -121.5279664 | 37.248099 | 17.69 | 32.41 | 30-35% | No | 0.040 | 25.87 | 7.64054271 | 11.95 |
| 6065045212 | 2293 | Riverside | 92201 | Indio | -116.2611913 | 33.730735 | 17.69 | 32.40 | 30-35% | No | 0.062 | 91.10 | 7.85958451 | 17.81 |
| 6065050700 | 9969 | Riverside | 92563 | Murrieta | -117.152033 | 33.6184112 | 17.69 | 32.39 | 30-35% | No | 0.060 | 85.21 | 7.85958451 | 17.81 |
| 6029003804 | 15464 | Kern | 93312 | Bakersfield | -119.1367966 | 35.4156972 | 17.68 | 32.37 | 30-35% | No | 0.062 | 91.10 | 18.76 | 99.64 |
| 6023000200 | 6211 | Humboldt | 95501 | Eureka | -124.1798708 | 40.7846083 | 17.68 | 32.36 | 30-35% | No | 0.026 | 0.24 | 6.18286598 | 7.76 |
| 6073020710 | 1749 | San Diego | 92025 | Escondido | -117.0160101 | 33.078589 | 17.68 | 32.35 | 30-35% | No | 0.048 | 60.88 | 10.37 | 52.61 |
| 6007001500 | 5297 | Butte | 95938 | Durham | -121.8415821 | 39.5969309 | 17.67 | 32.34 | 30-35% | No | 0.050 | 64.80 | 9.1171234 | 32.61 |
| 6071008709 | 4162 | San Bernardino | 92399 | Yucaipa | -117.0472277 | 34.0121649 | 17.67 | 32.32 | 30-35% | No | 0.068 | 100.00 | 9.53630303 | 40.92 |
| 6065044522 | 4876 | Riverside | 92240 | Desert Hot Springs | -116.5540657 | 33.9139607 | 17.66 | 32.31 | 30-35% | No | 0.068 | 100.00 | 5.76368635 | 4.73 |
| 6085512042 | 2841 | Santa Clara | 95111 | San Jose | -121.8144504 | 37.2661479 | 17.66 | 32.30 | 30-35% | No | 0.038 | 22.34 | 10.37 | 52.61 |
| 6001404900 | 4129 | Alameda | 94602 | Oakland | -122.2215015 | 37.8041479 | 17.66 | 32.29 | 30-35% | No | 0.030 | 7.58 | 8.69794377 | 30.70 |
| 6081601901 | 4119 | San Mateo | 94080 | South San Francisco | -122.4341168 | 37.6658727 | 17.65 | 32.27 | 30-35% | No | 0.030 | 7.58 | 8.69794377 | 30.70 |
| 6085505302 | 4015 | Santa Clara | 95051 | Santa Clara | -121.9724091 | 37.3606844 | 17.65 | 32.26 | 30-35% | No | 0.035 | 16.94 | 10.37 | 52.61 |
| 6037620601 | 5523 | Los Angeles | 90278 | Redondo Beach | -118.3619491 | 33.869596 | 17.65 | 32.25 | 30-35% | No | 0.044 | 40.49 | 12.05 | 81.66 |
| 6059052421 | 5111 | Orange | 92620 | Irvine | -117.7543564 | 33.7169413 | 17.65 | 32.24 | 30-35% | No | 0.050 | 64.80 | 9.53630303 | 40.92 |
| 6041104200 | 5722 | Marin | 94949 | Novato | -122.5687933 | 38.0608968 | 17.65 | 32.22 | 30-35% | No | 0.033 | 11.08 | 7.02122524 | 10.74 |
| 6111008500 | 8420 | Ventura | 93065 | Simi Valley | -118.768421 | 34.3123277 | 17.65 | 32.21 | 30-35% | No | 0.055 | 77.87 | 9.53630303 | 40.92 |
| 6067008137 | 2432 | Sacramento | 95610 | Citrus Heights | -121.2885102 | 38.6709519 | 17.64 | 32.20 | 30-35% | No | 0.053 | 73.93 | 8.69794377 | 30.70 |
| 6067007429 | 4889 | Sacramento | 95842 | Sacramento | -121.3576571 | 38.6982473 | 17.64 | 32.19 | 30-35% | No | 0.051 | 69.23 | 8.69794377 | 30.70 |
| 6037143500 | 4708 | Los Angeles | 91604 | Studio City | -118.40678 | 34.1476412 | 17.64 | 32.17 | 30-35% | No | 0.051 | 69.23 | 12.05 | 81.66 |
| 6067009325 | 836 | Sacramento | 95624 | Elk Grove | -121.2951929 | 38.4098054 | 17.64 | 32.16 | 30-35% | No | 0.050 | 64.80 | 9.1171234 | 32.61 |
| 6037214000 | 3898 | Los Angeles | 90036 | Los Angeles | -118.348502 | 34.0748535 | 17.64 | 32.15 | 30-35% | No | 0.048 | 60.88 | 12.05 | 81.66 |
| 6085503903 | 3301 | Santa Clara | 95127 | San Jose | -121.8355596 | 37.3684724 | 17.63 | 32.14 | 30-35% | No | 0.038 | 22.34 | 10.37 | 52.61 |
| 6067009617 | 3545 | Sacramento | 95758 | Elk Grove | -121.4407559 | 38.4151398 | 17.63 | 32.12 | 30-35% | No | 0.048 | 60.88 | 9.1171234 | 32.61 |
| 6053013700 | 5131 | Monterey | 93955 | Seaside | -121.8411902 | 36.6107804 | 17.63 | 32.11 | 30-35% | No | 0.035 | 16.94 | 5.34450672 | 3.92 |
| 6065043809 | 3015 | Riverside | 92223 | Beaumont | -116.9469611 | 33.976834 | 17.63 | 32.10 | 30-35% | No | 0.068 | 100.00 | 8.27876414 | 20.16 |
| 6037215102 | 3110 | Los Angeles | 90036 | Los Angeles | -118.3456014 | 34.0649905 | 17.63 | 32.08 | 30-35% | No | 0.048 | 60.88 | 12.05 | 81.66 |
| 6037431800 | 5640 | Los Angeles | 91007 | Arcadia | -118.0611057 | 34.1196211 | 17.63 | 32.07 | 30-35% | No | 0.051 | 69.23 | 10.79 | 54.48 |
| 6037651101 | 5103 | Los Angeles | 90505 | Torrance | -118.3366679 | 33.8072043 | 17.62 | 32.06 | 30-35% | No | 0.042 | 31.84 | 12.05 | 81.66 |
| 6067009106 | 4143 | Sacramento | 95826 | Sacramento | -121.3633877 | 38.56658 | 17.62 | 32.05 | 30-35% | No | 0.051 | 69.23 | 9.53630303 | 40.92 |
| 6057000801 | 4888 | Nevada | 95959 | Nevada City | -120.9405534 | 39.3058929 | 17.62 | 32.03 | 30-35% | No | 0.055 | 77.87 | 5.76368635 | 4.73 |
| 6037910714 | 3596 | Los Angeles | 93552 | Palmdale | -118.0375369 | 34.5616733 | 17.61 | 32.02 | 30-35% | No | 0.062 | 91.10 | 6.18286598 | 7.76 |
| 6001441800 | 6786 | Alameda | 94536 | Fremont | -121.9915834 | 37.5591933 | 17.60 | 32.01 | 30-35% | No | 0.035 | 16.94 | 9.1171234 | 32.61 |
| 6033000100 | 3121 | Lake | 48 | Mendocino NTL Fores | -122.9096015 | 39.3354913 | 17.60 | 32.00 | 30-35% | No | 0.040 | 25.87 | 3.63120437 | 0.10 |
| 6067008132 | 3710 | Sacramento | 95621 | Citrus Heights | -121.3150241 | 38.6952078 | 17.60 | 31.98 | 30-35% | No | 0.051 | 69.23 | 8.69794377 | 30.70 |
| 6013357000 | 3018 | Contra Costa | 94553 | Martinez | -122.1962349 | 38.0407401 | 17.60 | 31.97 | 30-35% | No | 0.035 | 16.94 | 7.85958451 | 17.81 |
| 6111007606 | 1555 | Ventura | 93021 | Moorpark | -118.8985461 | 34.2970288 | 17.60 | 31.96 | 30-35% | No | 0.051 | 69.23 | 9.53630303 | 40.92 |
| 6071002025 | 5056 | San Bernardino | 91701 | Rancho Cucamonga | -117.5821742 | 34.1283027 | 17.59 | 31.95 | 30-35% | No | 0.065 | 98.18 | 12.89 | 92.89 |
| 6037910605 | 4535 | Los Angeles | 93550 | Palmdale | -118.064732 | 34.569356 | 17.59 | 31.93 | 30-35% | No | 0.062 | 91.10 | 6.18286598 | 7.76 |
| 6075025200 | 5369 | San Francisco | 94110 | San Francisco | -122.4142164 | 37.7437089 | 17.58 | 31.92 | 30-35% | No | 0.030 | 7.58 | 8.69794377 | 30.70 |
| 6073008503 | 6599 | San Diego | 92117 | San Diego | -117.2135819 | 32.8176578 | 17.57 | 31.91 | 30-35% | No | 0.042 | 31.84 | 9.95548266 | 42.86 |
| 6059021812 | 6339 | Orange | 92807 | Anaheim | -117.8062222 | 33.8715008 | 17.57 | 31.90 | 30-35% | No | 0.050 | 64.80 | 11.63 | 69.14 |
| 6071007104 | 4093 | San Bernardino | 92313 | Grand Terrace | -117.3016257 | 34.0312019 | 17.56 | 31.88 | 30-35% | No | 0.065 | 98.18 | 12.89 | 92.89 |
| 6097150305 | 5282 | Sonoma | 95476 | Sonoma | -122.4926668 | 38.3258969 | 17.56 | 31.87 | 30-35% | No | 0.033 | 11.08 | 7.02122524 | 10.74 |
| 6059110118 | 2668 | Orange | 90630 | Cypress | -118.0500218 | 33.8205123 | 17.56 | 31.86 | 30-35% | No | 0.044 | 40.49 | 11.21 | 66.23 |
| 6037143700 | 3748 | Los Angeles | 90068 | Los Angeles | -118.3567733 | 34.1291853 | 17.56 | 31.85 | 30-35% | No | 0.051 | 69.23 | 12.05 | 81.66 |
| 6067008006 | 5718 | Sacramento | 95628 | Fair Oaks | -121.2391074 | 38.6490292 | 17.56 | 31.83 | 30-35% | No | 0.053 | 73.93 | 8.69794377 | 30.70 |
| 6071002019 | 4757 | San Bernardino | 91737 | Rancho Cucamonga | -117.5671666 | 34.1435784 | 17.55 | 31.82 | 30-35% | No | 0.065 | 98.18 | 12.89 | 92.89 |
| 6111008004 | 5156 | Ventura | 93065 | Simi Valley | -118.7508193 | 34.262391 | 17.55 | 31.81 | 30-35% | No | 0.055 | 77.87 | 9.53630303 | 40.92 |
| 6083001800 | 1245 | Santa Barbara | 32 | Los Padres NTL Forest | -119.71774 | 34.7776482 | 17.54 | 31.79 | 30-35% | No | 0.042 | 31.84 | 6.32145895 | 7.87 |
| 6089011702 | 3476 | Shasta | 96019 | Shasta Lake | -122.3702773 | 40.6711236 | 17.54 | 31.78 | 30-35% | No | 0.042 | 31.84 | 5.34450672 | 3.92 |
| 6077005210 | 11433 | San Joaquin | 95377 | Tracy | -121.4447294 | 37.7096379 | 17.53 | 31.77 | 30-35% | No | 0.053 | 73.93 | 10.37 | 52.61 |
| 6089010200 | 2078 | Shasta | 96001 | Redding | -122.3762226 | 40.5821764 | 17.53 | 31.76 | 30-35% | No | 0.042 | 31.84 | 6.18286598 | 7.76 |
| 6013339001 | 3362 | Contra Costa | 94596 | Walnut Creek | -122.0583635 | 37.8918717 | 17.52 | 31.74 | 30-35% | No | 0.038 | 22.34 | 7.85958451 | 17.81 |
| 6065040816 | 2594 | Riverside | 92879 | Corona | -117.5246107 | 33.9024569 | 17.50 | 31.73 | 30-35% | No | 0.062 | 91.10 | 13.31 | 93.64 |
| 6085504316 | 4839 | Santa Clara | 95131 | San Jose | -121.8708475 | 37.3868655 | 17.50 | 31.72 | 30-35% | No | 0.035 | 16.94 | 10.37 | 52.61 |
| 6089011500 | 5485 | Shasta | 96002 | Redding | -122.3121275 | 40.5037744 | 17.50 | 31.71 | 30-35% | No | 0.044 | 40.49 | 6.18286598 | 7.76 |
| 6013337200 | 7183 | Contra Costa | 94518 | Concord | -122.0267807 | 37.9515216 | 17.49 | 31.69 | 30-35% | No | 0.038 | 22.34 | 7.85958451 | 17.81 |
| 6013333200 | 5926 | Contra Costa | 94521 | Concord | -121.9851584 | 37.9689678 | 17.49 | 31.68 | 30-35% | No | 0.038 | 22.34 | 7.85958451 | 17.81 |
| 6073000400 | 3669 | San Diego | 92103 | San Diego | -117.1630579 | 32.7533323 | 17.49 | 31.67 | 30-35% | No | 0.040 | 25.87 | 10.37 | 52.61 |
| 6097151204 | 3413 | Sonoma | 94931 | Cotati | -122.7071979 | 38.3184467 | 17.49 | 31.66 | 30-35% | No | 0.030 | 7.58 | 6.18286598 | 7.76 |
| 6071007901 | 7908 | San Bernardino | 92346 | Highland | -117.1709663 | 34.1305047 | 17.48 | 31.64 | 30-35% | No | 0.068 | 100.00 | 11.21 | 66.23 |
| 6059110202 | 7762 | Orange | 92804 | Anaheim | -118.0152258 | 33.8245773 | 17.47 | 31.63 | 30-35% | No | 0.044 | 40.49 | 11.21 | 66.23 |
| 6037574400 | 5141 | Los Angeles | 90815 | Long Beach | -118.1015045 | 33.8042037 | 17.47 | 31.62 | 30-35% | No | 0.042 | 31.84 | 11.21 | 66.23 |
| 6037194401 | 2461 | Los Angeles | 90046 | Los Angeles | -118.3642238 | 34.0843098 | 17.46 | 31.61 | 30-35% | No | 0.048 | 60.88 | 12.05 | 81.66 |
| 6111001201 | 4235 | Ventura | 93060 | Santa Paula | -119.1600913 | 34.2996992 | 17.46 | 31.59 | 30-35% | No | 0.044 | 40.49 | 9.53630303 | 40.92 |
| 6071010901 | 5321 | San Bernardino | 92352 | Lake Arrowhead | -117.2161238 | 34.261789 | 17.45 | 31.58 | 30-35% | No | 0.068 | 100.00 | 9.95548266 | 42.86 |
| 6037111204 | 5859 | Los Angeles | 91326 | Porter Ranch | -118.5474393 | 34.2619679 | 17.45 | 31.57 | 30-35% | No | 0.060 | 85.21 | 10.37 | 52.61 |
| 6059063102 | 6257 | Orange | 92627 | Costa Mesa | -117.8936526 | 33.6580897 | 17.45 | 31.56 | 30-35% | No | 0.044 | 40.49 | 10.37 | 52.61 |
| 6067008134 | 4647 | Sacramento | 95608 | Carmichael | -121.3179997 | 38.6726924 | 17.44 | 31.54 | 30-35% | No | 0.051 | 69.23 | 9.1171234 | 32.61 |
| 6033000300 | 3846 | Lake | 95453 | Lakeport | -122.9648682 | 39.0413206 | 17.44 | 31.53 | 30-35% | No | 0.042 | 31.84 | 4.50614746 | 1.86 |
| 6001427100 | 3646 | Alameda | 94501 | Alameda | -122.2309908 | 37.765116 | 17.43 | 31.52 | 30-35% | No | 0.030 | 7.58 | 8.69794377 | 30.70 |
| 6053010102 | 3279 | Monterey | 95076 | Watsonville | -121.6811023 | 36.8844138 | 17.43 | 31.50 | 30-35% | No | 0.038 | 22.34 | 5.76368635 | 4.73 |
| 6067008139 | 3360 | Sacramento | 95610 | Citrus Heights | -121.2669754 | 38.6711 | 17.43 | 31.49 | 30-35% | No | 0.053 | 73.93 | 8.69794377 | 30.70 |
| 6111000702 | 3065 | Ventura | 93060 | Santa Paula | -119.0857732 | 34.3477055 | 17.42 | 31.48 | 30-35% | No | 0.048 | 60.88 | 9.53630303 | 40.92 |
| 6053013900 | 2673 | Monterey | 93955 | Seaside | -121.8296953 | 36.6190324 | 17.41 | 31.47 | 30-35% | No | 0.035 | 16.94 | 5.34450672 | 3.92 |
| 6075025402 | 2912 | San Francisco | 94110 | San Francisco | -122.412786 | 37.7368829 | 17.41 | 31.45 | 30-35% | No | 0.030 | 7.58 | 8.69794377 | 30.70 |
| 6045010600 | 6917 | Mendocino | 95490 | Willits | -123.3637722 | 39.4627841 | 17.41 | 31.44 | 30-35% | No | 0.038 | 22.34 | 6.46180492 | 7.95 |
| 6075022702 | 2060 | San Francisco | 94107 | San Francisco | -122.3956056 | 37.7625436 | 17.40 | 31.43 | 30-35% | No | 0.030 | 7.58 | 8.69794377 | 30.70 |
| 6067004012 | 3267 | Sacramento | 95831 | Sacramento | -121.5227613 | 38.4760817 | 17.40 | 31.42 | 30-35% | No | 0.048 | 60.88 | 8.69794377 | 30.70 |
| 6067007017 | 2770 | Sacramento | 95833 | Sacramento | -121.54606 | 38.6116619 | 17.40 | 31.40 | 30-35% | No | 0.048 | 60.88 | 8.69794377 | 30.70 |
| 6059110113 | 2276 | Orange | 90720 | Los Alamitos | -118.0371731 | 33.8066027 | 17.39 | 31.39 | 30-35% | No | 0.044 | 40.49 | 11.21 | 66.23 |
| 6059110012 | 5012 | Orange | 90740 | Seal Beach | -118.0583294 | 33.7780672 | 17.38 | 31.38 | 30-35% | No | 0.044 | 40.49 | 11.21 | 66.23 |
| 6037276400 | 4009 | Los Angeles | 90045 | Los Angeles | -118.4095017 | 33.9668881 | 17.38 | 31.37 | 30-35% | No | 0.046 | 53.02 | 12.05 | 81.66 |
| 6073003207 | 5890 | San Diego | 91902 | Bonita | -117.0309545 | 32.6716968 | 17.38 | 31.35 | 30-35% | No | 0.040 | 25.87 | 11.63 | 69.14 |
| 6053010604 | 5512 | Monterey | 93905 | Salinas | -121.604063 | 36.6969398 | 17.38 | 31.34 | 30-35% | No | 0.033 | 11.08 | 5.34450672 | 3.92 |
| 6085509105 | 6396 | Santa Clara | 94041 | Mountain View | -122.0625867 | 37.3786407 | 17.37 | 31.33 | 30-35% | No | 0.035 | 16.94 | 10.37 | 52.61 |
| 6059099412 | 4630 | Orange | 92647 | Huntington Beach | -118.0126393 | 33.7064714 | 17.36 | 31.32 | 30-35% | No | 0.044 | 40.49 | 11.21 | 66.23 |
| 6037215101 | 2477 | Los Angeles | 90036 | Los Angeles | -118.3535529 | 34.0636762 | 17.36 | 31.30 | 30-35% | No | 0.048 | 60.88 | 12.05 | 81.66 |
| 6059099405 | 4468 | Orange | 92647 | Huntington Beach | -118.0153188 | 33.7190914 | 17.36 | 31.29 | 30-35% | No | 0.044 | 40.49 | 11.21 | 66.23 |
| 6083002006 | 2240 | Santa Barbara | 93454 | Santa Maria | -120.3430442 | 34.87259 | 17.35 | 31.28 | 30-35% | No | 0.035 | 16.94 | 4.50614746 | 1.86 |
| 6059011718 | 3263 | Orange | 92870 | Placentia | -117.8479994 | 33.8939302 | 17.35 | 31.26 | 30-35% | No | 0.048 | 60.88 | 11.21 | 66.23 |
| 6037577603 | 8255 | Los Angeles | 90803 | Long Beach | -118.1273194 | 33.7691133 | 17.34 | 31.25 | 30-35% | No | 0.042 | 31.84 | 11.21 | 66.23 |
| 6065043274 | 2545 | Riverside | 92595 | Wildomar | -117.2478194 | 33.6430873 | 17.34 | 31.24 | 30-35% | No | 0.057 | 82.10 | 9.95548266 | 42.86 |
| 6087101000 | 7866 | Santa Cruz | 95060 | Santa Cruz | -122.0240405 | 36.9638282 | 17.34 | 31.23 | 30-35% | No | 0.035 | 16.94 | 8.27876414 | 20.16 |
| 6037702102 | 6306 | Los Angeles | 90405 | Santa Monica | -118.4807228 | 34.0009853 | 17.33 | 31.21 | 30-35% | No | 0.046 | 53.02 | 12.05 | 81.66 |
| 6097152905 | 4037 | Sonoma | 95403 | Santa Rosa | -122.759351 | 38.4702328 | 17.33 | 31.20 | 30-35% | No | 0.030 | 7.58 | 6.18286598 | 7.76 |
| 6081606600 | 3703 | San Mateo | 94402 | San Mateo | -122.3170319 | 37.55291 | 17.32 | 31.19 | 30-35% | No | 0.033 | 11.08 | 8.69794377 | 30.70 |
| 6071000104 | 6117 | San Bernardino | 91709 | Chino Hills | -117.7509989 | 34.0058644 | 17.31 | 31.18 | 30-35% | No | 0.057 | 82.10 | 12.47 | 83.99 |
| 6037910709 | 1650 | Los Angeles | 93552 | Palmdale | -118.0410787 | 34.528512 | 17.31 | 31.16 | 30-35% | No | 0.062 | 91.10 | 5.76368635 | 4.73 |
| 6065043240 | 8802 | Riverside | 92596 | Winchester | -117.0955335 | 33.6119888 | 17.31 | 31.15 | 30-35% | No | 0.060 | 85.21 | 6.60204561 | 8.67 |
| 6031000602 | 5676 | Kings | 93230 | Hanford | -119.650579 | 36.3572078 | 17.30 | 31.14 | 30-35% | No | 0.062 | 91.10 | 16.66 | 97.90 |
| 6087123100 | 2638 | Santa Cruz | 95076 | Watsonville | -121.7817391 | 36.9594832 | 17.30 | 31.13 | 30-35% | No | 0.038 | 22.34 | 6.60204561 | 8.67 |
| 6085504321 | 5346 | Santa Clara | 95132 | San Jose | -121.8652078 | 37.3930724 | 17.30 | 31.11 | 30-35% | No | 0.038 | 22.34 | 10.37 | 52.61 |
| 6111003700 | 6679 | Ventura | 93033 | Oxnard | -119.1912826 | 34.1819816 | 17.30 | 31.10 | 30-35% | No | 0.044 | 40.49 | 9.53630303 | 40.92 |
| 6081610602 | 3386 | San Mateo | 94025 | Menlo Park | -122.1975156 | 37.4745161 | 17.30 | 31.09 | 30-35% | No | 0.033 | 11.08 | 9.53630303 | 40.92 |
| 6073020020 | 7477 | San Diego | 92069 | San Marcos | -117.1744455 | 33.1663173 | 17.29 | 31.08 | 30-35% | No | 0.046 | 53.02 | 9.95548266 | 42.86 |
| 6061021034 | 3901 | Placer | 95678 | Roseville | -121.2990485 | 38.783729 | 17.29 | 31.06 | 30-35% | No | 0.053 | 73.93 | 7.85958451 | 17.81 |
| 6059110115 | 3613 | Orange | 90623 | La Palma | -118.0380241 | 33.8583374 | 17.29 | 31.05 | 30-35% | No | 0.046 | 53.02 | 11.21 | 66.23 |
| 6037574800 | 3000 | Los Angeles | 90815 | Long Beach | -118.1274859 | 33.7834929 | 17.28 | 31.04 | 30-35% | No | 0.042 | 31.84 | 11.21 | 66.23 |
| 6019005904 | 4192 | Fresno | 93657 | Sanger | -119.6356555 | 36.7303926 | 17.27 | 31.03 | 30-35% | No | 0.065 | 98.18 | 15.4 | 97.22 |
| 6037701402 | 6696 | Los Angeles | 90403 | Santa Monica | -118.503319 | 34.0190747 | 17.27 | 31.01 | 30-35% | No | 0.046 | 53.02 | 12.05 | 81.66 |
| 6001450745 | 5956 | Alameda | 94588 | Pleasanton | -121.8526518 | 37.6824862 | 17.27 | 31.00 | 30-35% | No | 0.040 | 25.87 | 8.69794377 | 30.70 |
| 6085505403 | 6595 | Santa Clara | 95051 | Santa Clara | -121.9862817 | 37.3417866 | 17.26 | 30.99 | 30-35% | No | 0.035 | 16.94 | 10.37 | 52.61 |
| 6073020025 | 4626 | San Diego | 92069 | San Marcos | -117.1298502 | 33.1395167 | 17.26 | 30.97 | 30-35% | No | 0.048 | 60.88 | 10.37 | 52.61 |
| 6073003113 | 5043 | San Diego | 92114 | San Diego | -117.0644799 | 32.6961845 | 17.26 | 30.96 | 30-35% | No | 0.040 | 25.87 | 11.21 | 66.23 |
| 6085509403 | 5121 | Santa Clara | 94040 | Mountain View | -122.0968319 | 37.3981136 | 17.25 | 30.95 | 30-35% | No | 0.035 | 16.94 | 9.95548266 | 42.86 |
| 6085502301 | 3245 | Santa Clara | 95125 | San Jose | -121.9070616 | 37.3010965 | 17.24 | 30.94 | 30-35% | No | 0.038 | 22.34 | 10.37 | 52.61 |
| 6085507806 | 5889 | Santa Clara | 95014 | Cupertino | -122.0408528 | 37.3285223 | 17.24 | 30.92 | 30-35% | No | 0.035 | 16.94 | 10.37 | 52.61 |
| 6081603700 | 5430 | San Mateo | 94066 | San Bruno | -122.4484528 | 37.6324976 | 17.24 | 30.91 | 30-35% | No | 0.030 | 7.58 | 8.69794377 | 30.70 |
| 6001451503 | 5660 | Alameda | 94550 | Livermore | -121.7489971 | 37.6849518 | 17.24 | 30.90 | 30-35% | No | 0.040 | 25.87 | 8.69794377 | 30.70 |
| 6073016806 | 4081 | San Diego | 92040 | Lakeside | -116.92865 | 32.82831 | 17.23 | 30.89 | 30-35% | No | 0.046 | 53.02 | 11.21 | 66.23 |
| 6061020712 | 3560 | Placer | 95661 | Roseville | -121.2625533 | 38.7386514 | 17.22 | 30.87 | 30-35% | No | 0.053 | 73.93 | 7.85958451 | 17.81 |
| 6013359105 | 4542 | Contra Costa | 94547 | Hercules | -122.2874536 | 38.0174202 | 17.21 | 30.86 | 30-35% | No | 0.033 | 11.08 | 7.85958451 | 17.81 |
| 6001450752 | 5262 | Alameda | 94588 | Pleasanton | -121.8238089 | 37.718917 | 17.21 | 30.85 | 30-35% | No | 0.040 | 25.87 | 8.69794377 | 30.70 |
| 6085509303 | 3706 | Santa Clara | 94043 | Mountain View | -122.0922777 | 37.4060297 | 17.20 | 30.84 | 30-35% | No | 0.035 | 16.94 | 9.53630303 | 40.92 |
| 6073001100 | 3098 | San Diego | 92116 | San Diego | -117.133414 | 32.7652989 | 17.20 | 30.82 | 30-35% | No | 0.040 | 25.87 | 10.37 | 52.61 |
| 6073016616 | 4067 | San Diego | 92071 | Santee | -116.9929396 | 32.8315369 | 17.19 | 30.81 | 30-35% | No | 0.044 | 40.49 | 11.21 | 66.23 |
| 6029003809 | 10984 | Kern | 93314 | Bakersfield | -119.2028983 | 35.3695847 | 17.19 | 30.80 | 30-35% | No | 0.062 | 91.10 | 18.76 | 99.64 |
| 6067009309 | 2282 | Sacramento | 95624 | Elk Grove | -121.3774487 | 38.4008878 | 17.19 | 30.79 | 30-35% | No | 0.048 | 60.88 | 9.1171234 | 32.61 |
| 6081605900 | 5579 | San Mateo | 94401 | San Mateo | -122.3340889 | 37.572378 | 17.19 | 30.77 | 30-35% | No | 0.033 | 11.08 | 8.69794377 | 30.70 |
| 6015000102 | 3769 | Del Norte | 95531 | Crescent City | -124.1632913 | 41.7597759 | 17.18 | 30.76 | 30-35% | No | 0.035 | 16.94 | 3.6677882 | 0.31 |
| 6075016300 | 4293 | San Francisco | 94102 | San Francisco | -122.4295509 | 37.7760456 | 17.18 | 30.75 | 30-35% | No | 0.030 | 7.58 | 8.69794377 | 30.70 |
| 6037620521 | 4097 | Los Angeles | 90278 | Redondo Beach | -118.3656204 | 33.876482 | 17.18 | 30.74 | 30-35% | No | 0.044 | 40.49 | 12.05 | 81.66 |
| 6001450300 | 4551 | Alameda | 94568 | Dublin | -121.9177415 | 37.7106983 | 17.18 | 30.72 | 30-35% | No | 0.038 | 22.34 | 8.69794377 | 30.70 |
| 6001438000 | 3283 | Alameda | 94544 | Hayward | -122.0285144 | 37.619128 | 17.15 | 30.71 | 30-35% | No | 0.035 | 16.94 | 8.69794377 | 30.70 |
| 6085512313 | 3887 | Santa Clara | 95037 | Morgan Hill | -121.653281 | 37.1159266 | 17.15 | 30.70 | 30-35% | No | 0.040 | 25.87 | 8.69794377 | 30.70 |
| 6059110116 | 4761 | Orange | 90623 | La Palma | -118.0412155 | 33.8485886 | 17.14 | 30.68 | 30-35% | No | 0.044 | 40.49 | 11.21 | 66.23 |
| 6001451300 | 6560 | Alameda | 94551 | Livermore | -121.8156491 | 37.6896396 | 17.14 | 30.67 | 30-35% | No | 0.040 | 25.87 | 8.69794377 | 30.70 |
| 6001403900 | 3584 | Alameda | 94610 | Oakland | -122.2487541 | 37.8171931 | 17.13 | 30.66 | 30-35% | No | 0.030 | 7.58 | 8.69794377 | 30.70 |
| 6037650800 | 7074 | Los Angeles | 90503 | Torrance | -118.3361037 | 33.8273423 | 17.12 | 30.65 | 30-35% | No | 0.042 | 31.84 | 12.05 | 81.66 |
| 6037910606 | 2970 | Los Angeles | 93550 | Palmdale | -118.0672703 | 34.5618494 | 17.12 | 30.63 | 30-35% | No | 0.062 | 91.10 | 6.18286598 | 7.76 |
| 6029005404 | 6672 | Kern | 93555 | Ridgecrest | -117.6538149 | 35.6086355 | 17.12 | 30.62 | 30-35% | No | 0.057 | 82.10 | 6.18286598 | 7.76 |
| 6075010500 | 2685 | San Francisco | 94111 | San Francisco | -122.3990586 | 37.8026841 | 17.10 | 30.61 | 30-35% | No | 0.030 | 7.58 | 8.69794377 | 30.70 |
| 6001427800 | 4640 | Alameda | 94501 | Alameda | -122.2690581 | 37.7714922 | 17.09 | 30.60 | 30-35% | No | 0.030 | 7.58 | 8.69794377 | 30.70 |
| 6057000900 | 4348 | Nevada | 95728 | Soda Springs | -120.601709 | 39.4097111 | 17.09 | 30.58 | 30-35% | No | 0.055 | 77.87 | 6.18286598 | 7.76 |
| 6037480704 | 4531 | Los Angeles | 91030 | South Pasadena | -118.1537015 | 34.1057393 | 17.09 | 30.57 | 30-35% | No | 0.050 | 64.80 | 11.21 | 66.23 |
| 6097151100 | 5151 | Sonoma | 94952 | Petaluma | -122.752421 | 38.2711754 | 17.08 | 30.56 | 30-35% | No | 0.030 | 7.58 | 6.18286598 | 7.76 |
| 6111003605 | 8606 | Ventura | 93035 | Oxnard | -119.2146586 | 34.1894237 | 17.07 | 30.55 | 30-35% | No | 0.044 | 40.49 | 9.53630303 | 40.92 |
| 6033000600 | 3957 | Lake | 95423 | Clearlake Oaks | -122.575206 | 39.081678 | 17.06 | 30.53 | 30-35% | No | 0.042 | 31.84 | 5.34450672 | 3.92 |
| 6001404800 | 2684 | Alameda | 94602 | Oakland | -122.2131962 | 37.8055076 | 17.06 | 30.52 | 30-35% | No | 0.030 | 7.58 | 8.69794377 | 30.70 |
| 6037599000 | 3569 | Los Angeles | 90704 | Avalon | -118.3304567 | 33.3421559 | 17.05 | 30.51 | 30-35% | No | 0.040 | 25.87 | NA | NA |
| 6065043256 | 3478 | Riverside | 92592 | Temecula | -117.0867251 | 33.479534 | 17.04 | 30.50 | 30-35% | No | 0.057 | 82.10 | 5.34450672 | 3.92 |
| 6073003114 | 3341 | San Diego | 92114 | San Diego | -117.0450027 | 32.6998002 | 17.03 | 30.48 | 30-35% | No | 0.040 | 25.87 | 11.21 | 66.23 |
| 6037403703 | 4748 | Los Angeles | 91724 | Covina | -117.8464362 | 34.0929382 | 17.03 | 30.47 | 30-35% | No | 0.057 | 82.10 | 11.21 | 66.23 |
| 6037920330 | 5349 | Los Angeles | 91355 | Valencia | -118.5606651 | 34.4044084 | 17.03 | 30.46 | 30-35% | No | 0.065 | 98.18 | 10.37 | 52.61 |
| 6089010900 | 4293 | Shasta | 96002 | Redding | -122.3669299 | 40.5566945 | 17.03 | 30.45 | 30-35% | No | 0.042 | 31.84 | 6.18286598 | 7.76 |
| 6035040200 | 2534 | Lassen | 96056 | McArthur | -120.9674678 | 40.5011553 | 17.02 | 30.43 | 30-35% | No | 0.050 | 64.80 | 5.33150434 | 2.61 |
| 6061020714 | 3660 | Placer | 95661 | Roseville | -121.2750016 | 38.7246552 | 17.02 | 30.42 | 30-35% | No | 0.053 | 73.93 | 7.85958451 | 17.81 |
| 6037271100 | 2449 | Los Angeles | 90064 | Los Angeles | -118.4268131 | 34.0339126 | 17.02 | 30.41 | 30-35% | No | 0.046 | 53.02 | 12.05 | 81.66 |
| 6071009709 | 6356 | San Bernardino | 92308 | Apple Valley | -117.1945742 | 34.4570452 | 17.02 | 30.39 | 30-35% | No | 0.065 | 98.18 | 7.44040487 | 11.80 |
| 6059110304 | 4612 | Orange | 90620 | Buena Park | -118.0282835 | 33.842788 | 17.01 | 30.38 | 30-35% | No | 0.046 | 53.02 | 11.21 | 66.23 |

| | | | | | | | | | | |
|---|---|---|---|---|---|---|---|---|---|---|
| 6037460301 | 4638 | Los Angeles | 91001 | Altadena | -118.1543957 | 34.2084457 | 17.01 | 30.37 | 30-35% | No |
| 6073016606 | 3388 | San Diego | 92071 | Santee | -117.0126279 | 32.841342 | 17.00 | 30.36 | 30-35% | No |
| 6081608600 | 4359 | San Mateo | 94002 | Belmont | -122.2743513 | 37.5267107 | 17.00 | 30.34 | 30-35% | No |
| 6037310100 | 5849 | Los Angeles | 91501 | Burbank | -118.3073649 | 34.2073831 | 16.99 | 30.33 | 30-35% | No |
| 6067009108 | 3693 | Sacramento | 95826 | Sacramento | -121.3548712 | 38.5505795 | 16.99 | 30.32 | 30-35% | No |
| 6013338101 | 4996 | Contra Costa | 94518 | Concord | -122.0425441 | 37.9488733 | 16.98 | 30.31 | 30-35% | No |
| 6037901009 | 5318 | Los Angeles | 93536 | Lancaster | -118.1746568 | 34.6821498 | 16.97 | 30.29 | 30-35% | No |
| 6037211701 | 2827 | Los Angeles | 90020 | Los Angeles | -118.3184531 | 34.0653405 | 16.96 | 30.28 | 30-35% | No |
| 6111008303 | 3767 | Ventura | 93063 | Simi Valley | -118.684829 | 34.2697395 | 16.96 | 30.27 | 30-35% | No |
| 6001428200 | 6259 | Alameda | 94501 | Alameda | -122.2396733 | 37.7533266 | 16.95 | 30.26 | 30-35% | No |
| 6037124700 | 4796 | Los Angeles | 91423 | Sherman Oaks | -118.414869 | 34.1621485 | 16.95 | 30.24 | 30-35% | No |
| 6111005303 | 9416 | Ventura | 93012 | Camarillo | -119.011877 | 34.2262262 | 16.94 | 30.23 | 30-35% | No |
| 6111001506 | 5027 | Ventura | 93003 | Ventura | -119.1896449 | 34.2620831 | 16.94 | 30.22 | 30-35% | No |
| 6061021045 | 2962 | Placer | 95678 | Roseville | -121.298816 | 38.7556033 | 16.94 | 30.21 | 30-35% | No |
| 6013304003 | 3433 | Contra Costa | 94505 | Discovery Bay | -121.577453 | 37.9016812 | 16.94 | 30.19 | 30-35% | No |
| 6001432800 | 3729 | Alameda | 94577 | San Leandro | -122.1245218 | 37.7212241 | 16.92 | 30.18 | 30-35% | No |
| 6097153401 | 6131 | Sonoma | 95472 | Sebastopol | -122.842325 | 38.4129715 | 16.92 | 30.17 | 30-35% | No |
| 6075011000 | 4827 | San Francisco | 94109 | San Francisco | -122.4198054 | 37.7943823 | 16.92 | 30.16 | 30-35% | No |
| 6065045108 | 5726 | Riverside | 92260 | Palm Desert | -116.3737306 | 33.7251085 | 16.91 | 30.14 | 30-35% | No |
| 6037901101 | 5496 | Los Angeles | 93536 | Lancaster | -118.2247482 | 34.6632213 | 16.90 | 30.13 | 30-35% | No |
| 6001435102 | 5179 | Alameda | 94542 | Hayward | -122.0458797 | 37.6552403 | 16.90 | 30.12 | 30-35% | No |

| | | | | | | | | | | | | |
|---|---|---|---|---|---|---|---|---|---|---|---|---|
| 6017030302 | 2867 | El Dorado | 96150 | South Lake Tahoe | -119.9875001 | 38.9351151 | 15.93 | 27.58 | 25-30% | No | 0.053 | 73.93 |
| 6073013420 | 3471 | San Diego | 91910 | Chula Vista | -117.021233 | 32.6400015 | 15.92 | 27.57 | 25-30% | No | 0.040 | 25.87 |
| 6111001602 | 2388 | Ventura | 93003 | Ventura | -119.2248513 | 34.2719368 | 15.91 | 27.56 | 25-30% | No | 0.044 | 40.49 |
| 6001422800 | 8368 | Alameda | 94704 | Berkeley | -122.259979 | 37.8667875 | 15.91 | 27.54 | 25-30% | No | 0.030 | 7.58 |
| 6029003806 | 4889 | Kern | 93312 | Bakersfield | -119.1014197 | 35.4094908 | 15.90 | 27.53 | 25-30% | No | 0.062 | 91.10 |
| 6059001505 | 6876 | Orange | 92835 | Fullerton | -117.8940242 | 33.9038169 | 15.90 | 27.52 | 25-30% | No | 0.048 | 60.88 |
| 6081604900 | 3243 | San Mateo | 94030 | Millbrae | -122.3981723 | 37.5892866 | 15.90 | 27.51 | 25-30% | No | 0.030 | 7.58 |
| 6087101200 | 3132 | Santa Cruz | 95060 | Santa Cruz | -122.0613064 | 36.9536393 | 15.89 | 27.49 | 25-30% | No | 0.035 | 16.94 |
| 6059062614 | 14044 | Orange | 92617 | Irvine | -117.8416879 | 33.6425125 | 15.88 | 27.48 | 25-30% | No | 0.046 | 53.02 |
| 6079011200 | 7355 | San Luis Obispo | 93405 | San Luis Obispo | -120.6876263 | 35.2910385 | 15.86 | 27.47 | 25-30% | No | 0.035 | 16.94 |
| 6037265410 | 1576 | Los Angeles | 90049 | Los Angeles | -118.4644168 | 34.066976 | 15.86 | 27.46 | 25-30% | No | 0.046 | 53.02 |
| 6037910205 | 1371 | Los Angeles | 93551 | Palmdale | -118.1335534 | 34.5350285 | 15.85 | 27.44 | 25-30% | No | 0.060 | 85.21 |
| 6065044509 | 3939 | Riverside | 92240 | Desert Hot Springs | -116.5060565 | 33.9650257 | 15.85 | 27.43 | 25-30% | No | 0.068 | 100.00 |
| 6037620701 | 6704 | Los Angeles | 90278 | Redondo Beach | -118.3812877 | 33.8699758 | 15.84 | 27.42 | 25-30% | No | 0.044 | 40.49 |
| 6089012603 | 4134 | Shasta | 96088 | Shingletown | -121.7413167 | 40.4793626 | 15.84 | 27.41 | 25-30% | No | 0.050 | 64.80 |
| 6079010204 | 5731 | San Luis Obispo | 93446 | Paso Robles | -120.6715959 | 35.609769 | 15.84 | 27.39 | 25-30% | No | 0.042 | 31.84 |
| 6001420500 | 2308 | Alameda | 94706 | Albany | -122.2950048 | 37.8867059 | 15.83 | 27.38 | 25-30% | No | 0.030 | 7.58 |
| 6013324002 | 5141 | Contra Costa | 94523 | Pleasant Hill | -122.0606042 | 37.9515418 | 15.83 | 27.37 | 25-30% | No | 0.038 | 22.34 |
| 6035040100 | 1822 | Lassen | 96132 | Termo | -120.5937208 | 40.8643392 | 15.82 | 27.36 | 25-30% | No | 0.048 | 60.88 |
| 6065043811 | 3877 | Riverside | 92320 | Calimesa | -117.0032167 | 33.9837424 | 15.81 | 27.34 | 25-30% | No | 0.068 | 100.00 |
| 6037143400 | 5881 | Los Angeles | 91604 | Studio City | -118.4110998 | 34.1538507 | 15.81 | 27.33 | 25-30% | No | 0.053 | 73.93 |
| 6055201602 | 3527 | Napa | 94574 | Saint Helena | -122.4787754 | 38.5082184 | 15.80 | 27.32 | 25-30% | No | 0.033 | 11.08 |
| 6111006302 | 3597 | Ventura | 91360 | Thousand Oaks | -118.8779656 | 34.2216307 | 15.80 | 27.30 | 25-30% | No | 0.048 | 60.88 |
| 6075011901 | 2408 | San Francisco | 94108 | San Francisco | -122.4139142 | 37.7904728 | 15.79 | 27.29 | 25-30% | No | 0.030 | 7.58 |
| 6085505800 | 3741 | Santa Clara | 95128 | San Jose | -121.9440215 | 37.3316017 | 15.79 | 27.28 | 25-30% | No | 0.035 | 16.94 |
| 6073001200 | 5660 | San Diego | 92116 | San Diego | -117.1317978 | 32.7580745 | 15.78 | 27.27 | 25-30% | No | 0.040 | 25.87 |
| 6037910713 | 5324 | Los Angeles | 93552 | Palmdale | -118.0382946 | 34.5728969 | 15.78 | 27.25 | 25-30% | No | 0.062 | 91.10 |
| 6067005803 | 3545 | Sacramento | 95864 | Sacramento | -121.3578694 | 38.5829045 | 15.78 | 27.24 | 25-30% | No | 0.051 | 69.23 |
| 6019005505 | 6613 | Fresno | 93720 | Fresno | -119.7387266 | 36.8739461 | 15.78 | 27.23 | 25-30% | No | 0.065 | 98.18 |
| 6037430400 | 4424 | Los Angeles | 91006 | Arcadia | -118.0252477 | 34.1632548 | 15.78 | 27.22 | 25-30% | No | 0.053 | 73.93 |
| 6037265602 | 3042 | Los Angeles | 90024 | Los Angeles | -118.434157 | 34.0602409 | 15.77 | 27.20 | 25-30% | No | 0.046 | 53.02 |
| 6071010419 | 4921 | San Bernardino | 92252 | Joshua Tree | -116.3126053 | 34.1074625 | 15.77 | 27.19 | 25-30% | No | 0.065 | 98.18 |
| 6037503601 | 4168 | Los Angeles | 90638 | La Mirada | -118.0111713 | 33.9225099 | 15.77 | 27.18 | 25-30% | No | 0.046 | 53.02 |
| 6001403502 | 1991 | Alameda | 94610 | Oakland | -122.2569405 | 37.8159606 | 15.76 | 27.17 | 25-30% | No | 0.030 | 7.58 |
| 6033000701 | 4343 | Lake | 95422 | Clearlake | -122.6425387 | 38.9855188 | 15.75 | 27.15 | 25-30% | No | 0.040 | 25.87 |
| 6085508703 | 7572 | Santa Clara | 94086 | Sunnyvale | -122.0110417 | 37.3697819 | 15.75 | 27.14 | 25-30% | No | 0.035 | 16.94 |
| 6029002820 | 6301 | Kern | 93311 | Bakersfield | -119.1187516 | 35.3180792 | 15.75 | 27.13 | 25-30% | No | 0.062 | 91.10 |
| 6065043235 | 3742 | Riverside | 92596 | Winchester | -117.1151886 | 33.6252032 | 15.74 | 27.12 | 25-30% | No | 0.060 | 85.21 |
| 6059110015 | 3548 | Orange | 90720 | Los Alamitos | -118.0523303 | 33.792587 | 15.74 | 27.10 | 25-30% | No | 0.044 | 40.49 |
| 6085503115 | 6027 | Santa Clara | 95136 | San Jose | -121.857638 | 37.2891305 | 15.74 | 27.09 | 25-30% | No | 0.038 | 22.34 |
| 6065046403 | 7156 | Riverside | 92530 | Lake Elsinore | -117.30778 | 33.6322595 | 15.74 | 27.08 | 25-30% | No | 0.057 | 82.10 |
| 6095227705 | 5962 | Solano | 94585 | Suisun City | -121.9964026 | 38.2500177 | 15.72 | 27.07 | 25-30% | No | 0.040 | 25.87 |
| 6037700700 | 3479 | Los Angeles | 90210 | Beverly Hills | -118.416559 | 34.0805214 | 15.71 | 27.05 | 25-30% | No | 0.048 | 60.88 |
| 6073019406 | 4628 | San Diego | 92083 | Vista | -117.2642216 | 33.1994118 | 15.70 | 27.04 | 25-30% | No | 0.044 | 40.49 |
| 6065046103 | 3030 | Riverside | 92225 | Blythe | -114.5972328 | 33.6249027 | 15.69 | 27.03 | 25-30% | No | 0.044 | 40.49 |
| 6087121402 | 4373 | Santa Cruz | 95062 | Santa Cruz | -121.9783864 | 36.9761783 | 15.69 | 27.01 | 25-30% | No | 0.035 | 16.94 |
| 6029005104 | 3253 | Kern | 93306 | Bakersfield | -118.8225658 | 35.4390643 | 15.69 | 27.00 | 25-30% | No | 0.062 | 91.10 |
| 6013389100 | 2002 | Contra Costa | 94530 | El Cerrito | -122.2980802 | 37.902246 | 15.69 | 26.99 | 25-30% | No | 0.030 | 7.58 |
| 6085506601 | 4482 | Santa Clara | 95130 | San Jose | -121.9823777 | 37.2928225 | 15.68 | 26.98 | 25-30% | No | 0.038 | 22.34 |
| 6037920334 | 6598 | Los Angeles | 91355 | Valencia | -118.5639835 | 34.387708 | 15.68 | 26.96 | 25-30% | No | 0.065 | 98.18 |
| 6073020023 | 3941 | San Diego | 92069 | San Marcos | -117.146847 | 33.1460671 | 15.68 | 26.95 | 25-30% | No | 0.046 | 53.02 |
| 6083000101 | 6495 | Santa Barbara | 93110 | Santa Barbara | -119.778762 | 34.4463233 | 15.67 | 26.94 | 25-30% | No | 0.040 | 25.87 |
| 6097150800 | 4994 | Sonoma | 94952 | Petaluma | -122.6647282 | 38.2087678 | 15.67 | 26.93 | 25-30% | No | 0.033 | 11.08 |
| 6001441402 | 5233 | Alameda | 94555 | Fremont | -122.0398734 | 37.5823791 | 15.66 | 26.91 | 25-30% | No | 0.035 | 16.94 |
| 6065044904 | 4543 | Riverside | 92262 | Palm Springs | -116.5443994 | 33.878264 | 15.66 | 26.90 | 25-30% | No | 0.068 | 100.00 |
| 6085502400 | 6813 | Santa Clara | 95125 | San Jose | -121.8926143 | 37.3047565 | 15.65 | 26.89 | 25-30% | No | 0.038 | 22.34 |
| 6073016614 | 3912 | San Diego | 92071 | Santee | -116.9900899 | 32.8465152 | 15.65 | 26.88 | 25-30% | No | 0.044 | 40.49 |
| 6085512307 | 6344 | Santa Clara | 95037 | Morgan Hill | -121.6367198 | 37.0997275 | 15.64 | 26.86 | 25-30% | No | 0.040 | 25.87 |
| 6059052523 | 4175 | Orange | 92614 | Irvine | -117.8238921 | 33.6736209 | 15.63 | 26.85 | 25-30% | No | 0.046 | 53.02 |
| 6077004305 | 5702 | San Joaquin | 95242 | Lodi | -121.2979405 | 38.1075416 | 15.63 | 26.84 | 25-30% | No | 0.048 | 60.88 |
| 6075060400 | 1689 | San Francisco | 94132 | San Francisco | -122.4911286 | 37.7223022 | 15.63 | 26.83 | 25-30% | No | 0.030 | 7.58 |
| 6065042709 | 4905 | Riverside | 92586 | Sun City | -117.2157958 | 33.7141447 | 15.62 | 26.81 | 25-30% | No | 0.062 | 91.10 |
| 6111001101 | 4491 | Ventura | 93022 | Oak View | -119.3015463 | 34.4047671 | 15.62 | 26.80 | 25-30% | No | 0.051 | 69.23 |
| 6037137301 | 2264 | Los Angeles | 91367 | Woodland Hills | -118.6340417 | 34.176253 | 15.62 | 26.79 | 25-30% | No | 0.055 | 77.87 |
| 6037430723 | 4118 | Los Angeles | 91007 | Arcadia | -118.0586171 | 34.1300364 | 15.61 | 26.78 | 25-30% | No | 0.051 | 69.23 |
| 6067008140 | 2894 | Sacramento | 95610 | Citrus Heights | -121.2790825 | 38.6948104 | 15.61 | 26.76 | 25-30% | No | 0.053 | 73.93 |
| 6065044806 | 1982 | Riverside | 92264 | Palm Springs | -116.5369599 | 33.812654 | 15.60 | 26.75 | 25-30% | No | 0.068 | 100.00 |
| 6065044405 | 2366 | Riverside | 92561 | Mountain Center | -116.6712993 | 33.8025623 | 15.60 | 26.74 | 25-30% | No | 0.065 | 98.18 |
| 6065045226 | 6810 | Riverside | 92236 | Coachella | -116.2077698 | 33.6929288 | 15.60 | 26.72 | 25-30% | No | 0.062 | 91.10 |
| 6085508503 | 6506 | Santa Clara | 94087 | Sunnyvale | -122.0260528 | 37.3573031 | 15.60 | 26.71 | 25-30% | No | 0.035 | 16.94 |
| 6037920028 | 5684 | Los Angeles | 91351 | Canyon Country | -118.4870567 | 34.4394521 | 15.59 | 26.70 | 25-30% | No | 0.065 | 98.18 |
| 6023000400 | 3873 | Humboldt | 95503 | Eureka | -124.178586 | 40.7593641 | 15.58 | 26.69 | 25-30% | No | 0.026 | 0.24 |
| 6059052515 | 8833 | Orange | 92606 | Irvine | -117.8097464 | 33.6916929 | 15.57 | 26.67 | 25-30% | No | 0.048 | 60.88 |
| 6071011404 | 3692 | San Bernardino | 92314 | Big Bear City | -116.7540769 | 34.2724679 | 15.57 | 26.66 | 25-30% | No | 0.068 | 100.00 |
| 6019005907 | 3095 | Fresno | 93611 | Clovis | -119.6601276 | 36.8304328 | 15.56 | 26.65 | 25-30% | No | 0.065 | 98.18 |
| 6073016810 | 2792 | San Diego | 92040 | Lakeside | -116.9106547 | 32.8479042 | 15.56 | 26.64 | 25-30% | No | 0.046 | 53.02 |
| 6073020806 | 5846 | San Diego | 92065 | Ramona | -116.8766106 | 33.0384857 | 15.56 | 26.62 | 25-30% | No | 0.048 | 60.88 |
| 6065043217 | 3263 | Riverside | 92591 | Temecula | -117.136759 | 33.5297942 | 15.56 | 26.61 | 25-30% | No | 0.057 | 82.10 |
| 6073019601 | 6291 | San Diego | 92084 | Vista | -117.2241894 | 33.2069221 | 15.55 | 26.60 | 25-30% | No | 0.044 | 40.49 |
| 6037910207 | 6023 | Los Angeles | 93551 | Palmdale | -118.1753866 | 34.595584 | 15.55 | 26.59 | 25-30% | No | 0.062 | 91.10 |
| 6033000502 | 2703 | Lake | 95464 | Nice | -122.8631148 | 39.120886 | 15.55 | 26.57 | 25-30% | No | 0.042 | 31.84 |
| 6073014602 | 4729 | San Diego | 91941 | La Mesa | -117.0248015 | 32.7533455 | 15.54 | 26.56 | 25-30% | No | 0.042 | 31.84 |
| 6085506703 | 3625 | Santa Clara | 95008 | Campbell | -121.9669404 | 37.2646993 | 15.54 | 26.55 | 25-30% | No | 0.038 | 22.34 |
| 6067009329 | 2300 | Sacramento | 95829 | Sacramento | -121.3443101 | 38.4581469 | 15.54 | 26.54 | 25-30% | No | 0.050 | 64.80 |
| 6115040902 | 1737 | Yuba | 95901 | Marysville | -121.3922825 | 39.1253115 | 15.53 | 26.52 | 25-30% | No | 0.051 | 69.23 |
| 6037403324 | 6804 | Los Angeles | 91765 | Diamond Bar | -117.816738 | 33.9789045 | 15.53 | 26.51 | 25-30% | No | 0.053 | 73.93 |
| 6059021922 | 4834 | Orange | 92808 | Anaheim | -117.7497908 | 33.8639175 | 15.53 | 26.50 | 25-30% | No | 0.051 | 69.23 |
| 6073019702 | 4933 | San Diego | 92081 | Vista | -117.2418366 | 33.1869616 | 15.52 | 26.49 | 25-30% | No | 0.044 | 40.49 |
| 6073009101 | 5318 | San Diego | 92117 | San Diego | -117.2039519 | 32.800198 | 15.52 | 26.47 | 25-30% | No | 0.042 | 31.84 |
| 6095251804 | 3655 | Solano | 94589 | Vallejo | -122.2787949 | 38.1510468 | 15.52 | 26.46 | 25-30% | No | 0.035 | 16.94 |
| 6073020809 | 6778 | San Diego | 92065 | Ramona | -116.8524089 | 33.0396539 | 15.52 | 26.45 | 25-30% | No | 0.048 | 60.88 |
| 6073019806 | 11116 | San Diego | 92010 | Carlsbad | -117.2771634 | 33.1585 | 15.51 | 26.43 | 25-30% | No | 0.044 | 40.49 |
| 6097154100 | 3729 | Sonoma | 95441 | Geyserville | -122.8056815 | 38.707649 | 15.51 | 26.42 | 25-30% | No | 0.035 | 16.94 |
| 6017030301 | 2469 | El Dorado | 96150 | South Lake Tahoe | -119.9807563 | 38.9238251 | 15.50 | 26.41 | 25-30% | No | 0.053 | 73.93 |
| 6073000202 | 4208 | San Diego | 92103 | San Diego | -117.1751643 | 32.7453846 | 15.49 | 26.40 | 25-30% | No | 0.040 | 25.87 |
| 6065044507 | 6565 | Riverside | 92240 | Desert Hot Springs | -116.5281763 | 33.9472557 | 15.48 | 26.38 | 25-30% | No | 0.068 | 100.00 |
| 6001442301 | 4388 | Alameda | 94538 | Fremont | -121.9615164 | 37.5278226 | 15.48 | 26.37 | 25-30% | No | 0.035 | 16.94 |
| 6001442601 | 3844 | Alameda | 94536 | Fremont | -121.9976615 | 37.544306 | 15.47 | 26.36 | 25-30% | No | 0.035 | 16.94 |
| 6037431300 | 2661 | Los Angeles | 91016 | Monrovia | -118.0066851 | 34.1251612 | 15.47 | 26.35 | 25-30% | No | 0.053 | 73.93 |
| 6085512035 | 4172 | Santa Clara | 95139 | San Jose | -121.7615938 | 37.2236023 | 15.47 | 26.33 | 25-30% | No | 0.038 | 22.34 |
| 6111005908 | 2711 | Ventura | 91320 | Newbury Park | -118.9225569 | 34.1791943 | 15.46 | 26.32 | 25-30% | No | 0.048 | 60.88 |
| 6065043250 | 8339 | Riverside | 92592 | Temecula | -117.1043423 | 33.4732265 | 15.46 | 26.31 | 25-30% | No | 0.057 | 82.10 |
| 6097150203 | 4505 | Sonoma | 95476 | Sonoma | -122.4621638 | 38.2775446 | 15.45 | 26.30 | 25-30% | No | 0.035 | 16.94 |
| 6097150902 | 3350 | Sonoma | 94952 | Petaluma | -122.6532628 | 38.2443637 | 15.44 | 26.28 | 25-30% | No | 0.033 | 11.08 |
| 6097150306 | 4107 | Sonoma | 95476 | Sonoma | -122.4692305 | 38.3391382 | 15.44 | 26.27 | 25-30% | No | 0.035 | 16.94 |
| 6073013412 | 5086 | San Diego | 91902 | Bonita | -117.0387029 | 32.6499247 | 15.44 | 26.26 | 25-30% | No | 0.040 | 25.87 |
| 6087121500 | 4917 | Santa Cruz | 95062 | Santa Cruz | -121.9916467 | 36.9617043 | 15.44 | 26.25 | 25-30% | No | 0.035 | 16.94 |
| 6037216100 | 2289 | Los Angeles | 90019 | Los Angeles | -118.3379721 | 34.0569256 | 15.44 | 26.23 | 25-30% | No | 0.048 | 60.88 |
| 6085507805 | 5397 | Santa Clara | 94087 | Sunnyvale | -122.0521886 | 37.333367 | 15.44 | 26.22 | 25-30% | No | 0.035 | 16.94 |
| 6073009301 | 4164 | San Diego | 92123 | San Diego | -117.1342573 | 32.8015574 | 15.44 | 26.21 | 25-30% | No | 0.042 | 31.84 |
| 6017032000 | 1015 | El Dorado | 96150 | South Lake Tahoe | -120.1061688 | 38.9115774 | 15.43 | 26.19 | 25-30% | No | 0.053 | 73.93 |
| 6085510700 | 4775 | Santa Clara | 94306 | Palo Alto | -122.128161 | 37.41742 | 15.43 | 26.18 | 25-30% | No | 0.033 | 11.08 |
| 6081600402 | 5068 | San Mateo | 94014 | Daly City | -122.4529127 | 37.7051087 | 15.42 | 26.17 | 25-30% | No | 0.030 | 7.58 |
| 6001441401 | 6931 | Alameda | 94555 | Fremont | -122.0376753 | 37.5735681 | 15.42 | 26.16 | 25-30% | No | 0.035 | 16.94 |
| 6085506502 | 3907 | Santa Clara | 95008 | Campbell | -121.9470351 | 37.2790204 | 15.41 | 26.14 | 25-30% | No | 0.038 | 22.34 |
| 6041104102 | 5135 | Marin | 94947 | Novato | -122.5588729 | 38.0880631 | 15.41 | 26.13 | 25-30% | No | 0.033 | 11.08 |
| 6067007426 | 2234 | Sacramento | 95843 | Antelope | -121.3801503 | 38.7094156 | 15.41 | 26.12 | 25-30% | No | 0.051 | 69.23 |
| 6037571102 | 3877 | Los Angeles | 90713 | Lakewood | -118.1163514 | 33.8359759 | 15.40 | 26.11 | 25-30% | No | 0.042 | 31.84 |
| 6013332000 | 7534 | Contra Costa | 94519 | Concord | -121.9977502 | 37.9817896 | 15.40 | 26.09 | 25-30% | No | 0.038 | 22.34 |
| 6081603801 | 2242 | San Mateo | 94066 | San Bruno | -122.4282283 | 37.620041 | 15.40 | 26.08 | 25-30% | No | 0.030 | 7.58 |
| 6085508602 | 3839 | Santa Clara | 94086 | Sunnyvale | -122.0289165 | 37.3727789 | 15.39 | 26.07 | 25-30% | No | 0.035 | 16.94 |
| 6023011600 | 4133 | Humboldt | 95514 | Blocksburg | -123.7194932 | 40.2182142 | 15.39 | 26.06 | 25-30% | No | 0.033 | 11.08 |
| 6085511000 | 6402 | Santa Clara | 94303 | Palo Alto | -122.1218431 | 37.4375758 | 15.38 | 26.04 | 25-30% | No | 0.033 | 11.08 |
| 6017030402 | 3723 | El Dorado | 96150 | South Lake Tahoe | -120.0073155 | 38.8973453 | 15.38 | 26.03 | 25-30% | No | 0.053 | 73.93 |
| 6019004301 | 3853 | Fresno | 93711 | Fresno | -119.8416197 | 36.8461939 | 15.38 | 26.02 | 25-30% | No | 0.060 | 85.21 |
| 6071000107 | 2957 | San Bernardino | 91709 | Chino Hills | -117.7223102 | 33.9861214 | 15.37 | 26.01 | 25-30% | No | 0.057 | 82.10 |
| 6109001100 | 3883 | Tuolumne | 95370 | Sonora | -120.3994429 | 37.9791454 | 15.37 | 25.99 | 25-30% | No | 0.055 | 77.87 |
| 6001451505 | 3337 | Alameda | 94550 | Livermore | -121.7246715 | 37.6894445 | 15.37 | 25.98 | 25-30% | No | 0.040 | 25.87 |
| 6089011209 | 6113 | Shasta | 96002 | Redding | -122.347675 | 40.5520369 | 15.36 | 25.97 | 25-30% | No | 0.042 | 31.84 |
| 6059110114 | 4828 | Orange | 90630 | Cypress | -118.0403113 | 33.8131222 | 15.35 | 25.96 | 25-30% | No | 0.044 | 40.49 |
| 6059032012 | 3626 | Orange | 92691 | Mission Viejo | -117.6666498 | 33.5912214 | 15.35 | 25.94 | 25-30% | No | 0.050 | 64.80 |
| 6037910206 | 3246 | Los Angeles | 93551 | Palmdale | -118.2587356 | 34.5783103 | 15.34 | 25.93 | 25-30% | No | 0.062 | 91.10 |
| 6037276601 | 3838 | Los Angeles | 90293 | Playa del Rey | -118.4345193 | 33.9637725 | 15.34 | 25.92 | 25-30% | No | 0.046 | 53.02 |
| 6071008401 | 9953 | San Bernardino | 92374 | Redlands | -117.1560951 | 34.076777 | 15.34 | 25.90 | 25-30% | No | 0.068 | 100.00 |
| 6067009619 | 7824 | Sacramento | 95758 | Elk Grove | -121.4715626 | 38.421522 | 15.33 | 25.89 | 25-30% | No | 0.048 | 60.88 |
| 6007000800 | 5295 | Butte | 95926 | Chico | -121.8161641 | 39.7502541 | 15.32 | 25.88 | 25-30% | No | 0.048 | 60.88 |
| 6067008122 | 3384 | Sacramento | 95628 | Fair Oaks | -121.2539353 | 38.6708781 | 15.31 | 25.87 | 25-30% | No | 0.053 | 73.93 |
| 6037400207 | 4798 | Los Angeles | 91750 | La Verne | -117.7783303 | 34.1336074 | 15.31 | 25.85 | 25-30% | No | 0.060 | 85.21 |
| 6075026301 | 4875 | San Francisco | 94112 | San Francisco | -122.439533 | 37.7138685 | 15.31 | 25.84 | 25-30% | No | 0.030 | 7.58 |
| 6067009330 | 3818 | Sacramento | 95829 | Sacramento | -121.3162322 | 38.4732642 | 15.31 | 25.83 | 25-30% | No | 0.050 | 64.80 |
| 6067008143 | 4248 | Sacramento | 95610 | Citrus Heights | -121.2812589 | 38.714169 | 15.31 | 25.82 | 25-30% | No | 0.053 | 73.93 |
| 6111005100 | 3768 | Ventura | 93066 | Somis | -119.0146271 | 34.2976284 | 15.30 | 25.80 | 25-30% | No | 0.048 | 60.88 |
| 6095250501 | 2071 | Solano | 94591 | Vallejo | -122.2138705 | 38.0932268 | 15.29 | 25.79 | 25-30% | No | 0.035 | 16.94 |
| 6095252201 | 8761 | Solano | 94534 | Fairfield | -122.1666634 | 38.2544469 | 15.28 | 25.78 | 25-30% | No | 0.038 | 22.34 |
| 6079012402 | 9097 | San Luis Obispo | 93444 | Nipomo | -120.509887 | 35.0285851 | 15.28 | 25.77 | 25-30% | No | 0.035 | 16.94 |
| 6073010501 | 1433 | San Diego | 91932 | Imperial Beach | -117.1255468 | 32.5854741 | 15.27 | 25.75 | 25-30% | No | 0.038 | 22.34 |
| 6085509500 | 5565 | Santa Clara | 94041 | Mountain View | -122.0896549 | 37.3944414 | 15.27 | 25.74 | 25-30% | No | 0.035 | 16.94 |
| 6085502909 | 5073 | Santa Clara | 95118 | San Jose | -121.887468 | 37.2564702 | 15.26 | 25.73 | 25-30% | No | 0.038 | 22.34 |
| 6059099406 | 4468 | Orange | 92647 | Huntington Beach | -118.0154407 | 33.7263926 | 15.26 | 25.72 | 25-30% | No | 0.044 | 40.49 |
| 6075026001 | 5863 | San Francisco | 94112 | San Francisco | -122.4322434 | 37.7235502 | 15.25 | 25.70 | 25-30% | No | 0.030 | 7.58 |
| 6001406700 | 5048 | Alameda | 94602 | Oakland | -122.2022249 | 37.8033164 | 15.24 | 25.69 | 25-30% | No | 0.030 | 7.58 |
| 6055200602 | 4468 | Napa | 94558 | Napa | -122.2993279 | 38.3344649 | 15.24 | 25.68 | 25-30% | No | 0.035 | 16.94 |
| 6037297300 | 2374 | Los Angeles | 90732 | San Pedro | -118.315013 | 33.7178352 | 15.24 | 25.67 | 25-30% | No | 0.042 | 31.84 |
| 6037103101 | 2670 | Los Angeles | 91040 | Sunland | -118.3078874 | 34.2732407 | 15.24 | 25.65 | 25-30% | No | 0.055 | 77.87 |
| 6061021129 | 3204 | Placer | 95677 | Rocklin | -121.2537196 | 38.7786032 | 15.22 | 25.64 | 25-30% | No | 0.053 | 73.93 |
| 6065041803 | 6475 | Riverside | 92882 | Corona | -117.5826965 | 33.8372032 | 15.21 | 25.63 | 25-30% | No | 0.057 | 82.10 |
| 6037500100 | 3540 | Los Angeles | 90631 | La Habra | -117.945019 | 33.9575548 | 15.21 | 25.61 | 25-30% | No | 0.048 | 60.88 |
| 6037408703 | 6528 | Los Angeles | 91748 | Rowland Heights | -117.8885626 | 33.9591947 | 15.20 | 25.60 | 25-30% | No | 0.050 | 64.80 |
| 6059021809 | 2902 | Orange | 92886 | Yorba Linda | -117.8356725 | 33.895211 | 15.20 | 25.59 | 25-30% | No | 0.050 | 64.80 |
| 6085512033 | 6125 | Santa Clara | 95119 | San Jose | -121.7964987 | 37.2389766 | 15.19 | 25.58 | 25-30% | No | 0.038 | 22.34 |
| 6037300901 | 6463 | Los Angeles | 91206 | Glendale | -118.205989 | 34.1691011 | 15.18 | 25.56 | 25-30% | No | 0.051 | 69.23 |
| 6009000300 | 6969 | Calaveras | 95246 | Mountain Ranch | -120.5813938 | 38.2401676 | 15.18 | 25.55 | 25-30% | No | 0.053 | 73.93 |
| 6023010102 | 2884 | Humboldt | 95546 | Hoopa | -123.9140107 | 41.2749037 | 15.18 | 25.54 | 25-30% | No | 0.033 | 11.08 |
| 6001407800 | 2425 | Alameda | 94613 | Oakland | -122.1866595 | 37.7817414 | 15.17 | 25.53 | 25-30% | No | 0.030 | 7.58 |
| 6095252914 | 5266 | Solano | 95687 | Vacaville | -121.9428965 | 38.3334133 | 15.17 | 25.51 | 25-30% | No | 0.042 | 31.84 |
| 6013355109 | 6416 | Contra Costa | 94509 | Antioch | -121.7940175 | 37.9762527 | 15.16 | 25.50 | 25-30% | No | 0.040 | 25.87 |
| 6059052519 | 4212 | Orange | 92614 | Irvine | -117.8184805 | 33.6693095 | 15.16 | 25.49 | 25-30% | No | 0.046 | 53.02 |
| 6081601800 | 6148 | San Mateo | 94080 | South San Francisco | -122.446023 | 37.6553283 | 15.16 | 25.48 | 25-30% | No | 0.030 | 7.58 |
| 6037141600 | 4029 | Los Angeles | 91403 | Sherman Oaks | -118.461044 | 34.138911 | 15.16 | 25.46 | 25-30% | No | 0.053 | 73.93 |
| 6037108201 | 5551 | Los Angeles | 91326 | Porter Ranch | -118.564234 | 34.2868634 | 15.13 | 25.45 | 25-30% | No | 0.060 | 85.21 |
| 6037930301 | 886 | Los Angeles | 93563 | Valyermo | -117.8661408 | 34.2803329 | 15.13 | 25.44 | 25-30% | No | 0.057 | 82.10 |
| 6059099231 | 5488 | Orange | 92708 | Fountain Valley | -117.9736643 | 33.6940356 | 15.13 | 25.43 | 25-30% | No | 0.044 | 40.49 |
| 6067004005 | 4185 | Sacramento | 95831 | Sacramento | -121.5350905 | 38.5100755 | 15.13 | 25.41 | 25-30% | No | 0.048 | 60.88 |
| 6001451601 | 4617 | Alameda | 94550 | Livermore | -121.7607445 | 37.6683795 | 15.12 | 25.40 | 25-30% | No | 0.040 | 25.87 |
| 6059099251 | 5218 | Orange | 92708 | Fountain Valley | -117.9499292 | 33.7087027 | 15.12 | 25.39 | 25-30% | No | 0.044 | 40.49 |
| 6043000200 | 3352 | Mariposa | 95311 | Coulterville | -120.1089266 | 37.6729487 | 15.12 | 25.38 | 25-30% | No | 0.057 | 82.10 |
| 6019005524 | 4571 | Fresno | 93619 | Clovis | -119.7204462 | 36.8594085 | 15.11 | 25.36 | 25-30% | No | 0.065 | 98.18 |
| 6059021917 | 3435 | Orange | 92869 | Orange | -117.7811071 | 33.804727 | 15.10 | 25.35 | 25-30% | No | 0.050 | 64.80 |
| 6095250106 | 4412 | Solano | 94591 | Vallejo | -122.1822552 | 38.1382068 | 15.10 | 25.34 | 25-30% | No | 0.035 | 16.94 |
| 6073019206 | 5614 | San Diego | 92084 | Vista | -117.2372592 | 33.215823 | 15.09 | 25.32 | 25-30% | No | 0.044 | 40.49 |
| 6059063201 | 3801 | Orange | 92627 | Costa Mesa | -117.9035763 | 33.650871 | 15.09 | 25.31 | 25-30% | No | 0.044 | 40.49 |
| 6111007511 | 2222 | Ventura | 91307 | West Hills | -118.7013739 | 34.2259874 | 15.08 | 25.30 | 25-30% | No | 0.055 | 77.87 |
| 6007002601 | 2324 | Butte | 95966 | Oroville | -121.4581641 | 39.4867836 | 15.07 | 25.29 | 25-30% | No | 0.051 | 69.23 |
| 6065044510 | 5808 | Riverside | 92240 | Desert Hot Springs | -116.4896937 | 33.954147 | 15.07 | 25.27 | 25-30% | No | 0.068 | 100.00 |
| 6089012302 | 5450 | Shasta | 96007 | Anderson | -122.4406002 | 40.4595005 | 15.06 | 25.26 | 25-30% | No | 0.044 | 40.49 |
| 6063000202 | 1161 | Plumas | 95981 | Strawberry Valley | -121.0251013 | 39.8314906 | 15.06 | 25.25 | 25-30% | No | 0.053 | 73.93 |
| 6037401002 | 3973 | Los Angeles | 91741 | Glendora | -117.8658886 | 34.1415042 | 15.06 | 25.24 | 25-30% | No | 0.057 | 82.10 |
| 6059021825 | 3107 | Orange | 92886 | Yorba Linda | -117.7528373 | 33.8994154 | 15.06 | 25.22 | 25-30% | No | 0.053 | 73.93 |
| 6073018803 | 4564 | San Diego | 92003 | Bonsall | -117.1904461 | 33.2857623 | 15.05 | 25.21 | 25-30% | No | 0.046 | 53.02 |
| 6085504416 | 3591 | Santa Clara | 95035 | Milpitas | -121.8760953 | 37.4206966 | 15.04 | 25.20 | 25-30% | No | 0.038 | 22.34 |
| 6073019602 | 5464 | San Diego | 92084 | Vista | -117.2174758 | 33.195293 | 15.03 | 25.19 | 25-30% | No | 0.044 | 40.49 |
| 6037189702 | 2227 | Los Angeles | 90068 | Los Angeles | -118.3410171 | 34.1124841 | 15.02 | 25.17 | 25-30% | No | 0.051 | 69.23 |
| 6059063103 | 2643 | Orange | 92627 | Costa Mesa | -117.8996392 | 33.6441646 | 15.01 | 25.16 | 25-30% | No | 0.044 | 40.49 |
| 6023000300 | 5544 | Humboldt | 95503 | Eureka | -124.1708514 | 40.7726775 | 15.01 | 25.15 | 25-30% | No | 0.026 | 0.24 |
| 6065044604 | 4320 | Riverside | 92262 | Palm Springs | -116.5205082 | 33.8540687 | 15.00 | 25.14 | 25-30% | No | 0.068 | 100.00 |
| 6075026003 | 4908 | San Francisco | 94112 | San Francisco | -122.4287994 | 37.7196247 | 15.00 | 25.12 | 25-30% | No | 0.030 | 7.58 |
| 6037920039 | 1896 | Los Angeles | 91387 | Canyon Country | -118.439602 | 34.4234332 | 15.00 | 25.11 | 25-30% | No | 0.062 | 91.10 |
| 6037108104 | 1698 | Los Angeles | 91326 | Porter Ranch | -118.5460083 | 34.2943135 | 14.99 | 25.10 | 25-30% | No | 0.060 | 85.21 |
| 6079011002 | 2877 | San Luis Obispo | 93401 | San Luis Obispo | -120.6420907 | 35.2838276 | 14.99 | 25.09 | 25-30% | No | 0.035 | 16.94 |
| 6059110001 | 4467 | Orange | 92845 | Garden Grove | -118.0344035 | 33.7896268 | 14.98 | 25.07 | 25-30% | No | 0.044 | 40.49 |
| 6071009109 | 6070 | San Bernardino | 92371 | Phelan | -117.5382643 | 34.4143078 | 14.98 | 25.06 | 25-30% | No | 0.065 | 98.18 |
| 6067009331 | 7049 | Sacramento | 95624 | Elk Grove | -121.3439364 | 38.416349 | 14.98 | 25.05 | 25-30% | No | 0.050 | 64.80 |
| 6065043248 | 4214 | Riverside | 92592 | Temecula | -117.0855219 | 33.4711629 | 14.97 | 25.03 | 25-30% | No | 0.057 | 82.10 |
| 6059052514 | 5327 | Orange | 92614 | Irvine | -117.7987172 | 33.6693462 | 14.96 | 25.02 | 25-30% | No | 0.048 | 60.88 |
| 6095253203 | 4147 | Solano | 95688 | Vacaville | -121.9967931 | 38.3622036 | 14.96 | 25.01 | 25-30% | No | 0.042 | 31.84 |
| 6059110006 | 2885 | Orange | 90720 | Los Alamitos | -118.079092 | 33.7981512 | 14.95 | 25.00 | 20-25% | No | 0.044 | 40.49 |
| 6019005507 | 5732 | Fresno | 93720 | Fresno | -119.7567596 | 36.8592568 | 14.94 | 24.98 | 20-25% | No | 0.065 | 98.18 |
| 6037920033 | 515 | Los Angeles | 91351 | Canyon Country | -118.4326143 | 34.4596282 | 14.94 | 24.97 | 20-25% | No | 0.062 | 91.10 |
| 6001430600 | 5887 | Alameda | 94546 | Castro Valley | -122.0969654 | 37.7041735 | 14.94 | 24.96 | 20-25% | No | 0.033 | 11.08 |
| 6111005305 | 5777 | Ventura | 93012 | Camarillo | -118.942056 | 34.2406625 | 14.93 | 24.95 | 20-25% | No | 0.048 | 60.88 |
| 6037800329 | 6421 | Los Angeles | 91301 | Agoura Hills | -118.7391708 | 34.1211218 | 14.92 | 24.93 | 20-25% | No | 0.053 | 73.93 |
| 6037920314 | 2909 | Los Angeles | 91350 | Santa Clarita | -118.5248234 | 34.4030093 | 14.92 | 24.92 | 20-25% | No | 0.068 | 100.00 |
| 6093000100 | 1458 | Siskiyou | 96058 | Macdoel | -121.6338007 | 41.8189992 | 14.91 | 24.91 | 20-25% | No | 0.044 | 40.49 |
| 6055200803 | 2165 | Napa | 94558 | Napa | -122.3325087 | 38.2915986 | 14.91 | 24.90 | 20-25% | No | 0.035 | 16.94 |
| 6071008403 | 5833 | San Bernardino | 92374 | Redlands | -117.1523161 | 34.0470121 | 14.90 | 24.88 | 20-25% | No | 0.068 | 100.00 |
| 6075011200 | 3286 | San Francisco | 94108 | San Francisco | -122.4127333 | 37.7929713 | 14.90 | 24.87 | 20-25% | No | 0.030 | 7.58 |
| 6039000103 | 5033 | Madera | 93644 | Oakhurst | -119.5191768 | 37.5026912 | 14.89 | 24.86 | 20-25% | No | 0.057 | 82.10 |
| 6029003808 | 4439 | Kern | 93312 | Bakersfield | -119.1006532 | 35.3914329 | 14.89 | 24.85 | 20-25% | No | 0.062 | 91.10 |
| 6085505008 | 5254 | Santa Clara | 95134 | San Jose | -121.9437133 | 37.4054144 | 14.88 | 24.83 | 20-25% | No | 0.035 | 16.94 |
| 6071000116 | 10856 | San Bernardino | 91709 | Chino Hills | -117.7015882 | 33.9228798 | 14.88 | 24.82 | 20-25% | No | 0.055 | 77.87 |
| 6075015300 | 2040 | San Francisco | 94115 | San Francisco | -122.4393346 | 37.7867618 | 14.88 | 24.81 | 20-25% | No | 0.030 | 7.58 |

| | | | | | | | | | | | |
|---|---|---|---|---|---|---|---|---|---|---|---|
| 6037920116 | 5181 | Los Angeles | 91384 | Castaic | -118.6328469 | 34.4800849 | 14.88 | 24.80 | 20-25% | No | 0.060 |
| 6007000104 | 5636 | Butte | 95973 | Chico | -121.8375293 | 39.7670771 | 14.87 | 24.78 | 20-25% | No | 0.048 |
| 6085512052 | 3988 | Santa Clara | 95123 | San Jose | -121.8642681 | 37.2484923 | 14.87 | 24.77 | 20-25% | No | 0.038 |
| 6083002932 | 2499 | Santa Barbara | 93117 | Goleta | -120.028824 | 34.4809488 | 14.85 | 24.76 | 20-25% | No | 0.040 |
| 6073020709 | 8007 | San Diego | 92027 | Escondido | -116.9769969 | 33.1311558 | 14.84 | 24.74 | 20-25% | No | 0.048 |
| 6065044805 | 1701 | Riverside | 92264 | Palm Springs | -116.536936 | 33.8050178 | 14.83 | 24.73 | 20-25% | No | 0.068 |
| 6111003013 | 4657 | Ventura | 93036 | Oxnard | -119.187345 | 34.2312155 | 14.83 | 24.72 | 20-25% | No | 0.044 |
| 6067009324 | 2742 | Sacramento | 95624 | Elk Grove | -121.3121535 | 38.4344264 | 14.83 | 24.71 | 20-25% | No | 0.050 |
| 6041102203 | 4753 | Marin | 94945 | Novato | -122.5703276 | 38.1104411 | 14.83 | 24.69 | 20-25% | No | 0.033 |
| 6065042714 | 3230 | Riverside | 92587 | Sun City | -117.2596623 | 33.6784416 | 14.83 | 24.68 | 20-25% | No | 0.060 |
| 6085504201 | 4779 | Santa Clara | 95127 | San Jose | -121.8211438 | 37.3845939 | 14.82 | 24.67 | 20-25% | No | 0.038 |
| 6097154202 | 5994 | Sonoma | 95425 | Cloverdale | -123.1049627 | 38.7861401 | 14.81 | 24.66 | 20-25% | No | 0.035 |
| 6053010603 | 7304 | Monterey | 93906 | Salinas | -121.6133637 | 36.706281 | 14.81 | 24.64 | 20-25% | No | 0.033 |
| 6073018515 | 4494 | San Diego | 92056 | Oceanside | -117.3197917 | 33.1916919 | 14.81 | 24.63 | 20-25% | No | 0.042 |
| 6085512021 | 6087 | Santa Clara | 95136 | San Jose | -121.8239467 | 37.2635211 | 14.80 | 24.62 | 20-25% | No | 0.038 |
| 6101050604 | 4178 | Sutter | 95993 | Yuba City | -121.6396026 | 39.1562085 | 14.79 | 24.61 | 20-25% | No | 0.048 |
| 6085503802 | 7884 | Santa Clara | 95127 | San Jose | -121.8355147 | 37.3842879 | 14.79 | 24.59 | 20-25% | No | 0.038 |
| 6053012700 | 3299 | Monterey | 93940 | Monterey | -121.8947338 | 36.6021019 | 14.79 | 24.58 | 20-25% | No | 0.033 |
| 6037577501 | 3435 | Los Angeles | 90803 | Long Beach | -118.1232111 | 33.7551714 | 14.79 | 24.57 | 20-25% | No | 0.042 |
| 6001423500 | 3118 | Alameda | 94703 | Berkeley | -122.2680467 | 37.859365 | 14.77 | 24.56 | 20-25% | No | 0.030 |
| 6085512019 | 4737 | Santa Clara | 95136 | San Jose | -121.8458034 | 37.2707459 | 14.77 | 24.54 | 20-25% | No | 0.038 |
| 6083002806 | 2266 | Santa Barbara | 93436 | Lompoc | -120.4797843 | 34.65176 | 14.76 | 24.53 | 20-25% | No | 0.038 |
| 6073002902 | 5272 | San Diego | 92115 | San Diego | -117.058923 | 32.7604105 | 14.76 | 24.52 | 20-25% | No | 0.042 |
| 6071009201 | 4557 | San Bernardino | 92397 | Wrightwood | -117.6226567 | 34.3550726 | 14.74 | 24.50 | 20-25% | No | 0.065 |
| 6073020904 | 3075 | San Diego | 92036 | Julian | -116.6289159 | 33.0526793 | 14.74 | 24.49 | 20-25% | No | 0.053 |
| 6073013314 | 14837 | San Diego | 91915 | Chula Vista | -116.9557609 | 32.6100121 | 14.73 | 24.48 | 20-25% | No | 0.038 |
| 6067008136 | 2339 | Sacramento | 95621 | Citrus Heights | -121.2954194 | 38.6855205 | 14.73 | 24.47 | 20-25% | No | 0.053 |
| 6059099512 | 2868 | Orange | 90740 | Seal Beach | -118.1043364 | 33.7444635 | 14.72 | 24.45 | 20-25% | No | 0.042 |
| 6083000102 | 5245 | Santa Barbara | 93110 | Santa Barbara | -119.7525641 | 34.4464541 | 14.72 | 24.44 | 20-25% | No | 0.040 |
| 6083000301 | 2810 | Santa Barbara | 93101 | Santa Barbara | -119.7150663 | 34.4261948 | 14.72 | 24.43 | 20-25% | No | 0.040 |
| 6059011710 | 3442 | Orange | 92870 | Placentia | -117.8625111 | 33.8923778 | 14.70 | 24.42 | 20-25% | No | 0.048 |
| 6037135201 | 2620 | Los Angeles | 91307 | West Hills | -118.6261323 | 34.1903616 | 14.69 | 24.40 | 20-25% | No | 0.057 |
| 6037910210 | 7103 | Los Angeles | 93551 | Palmdale | -118.1947725 | 34.6173553 | 14.69 | 24.39 | 20-25% | No | 0.062 |
| 6007001703 | 2852 | Butte | 95954 | Magalia | -121.6019972 | 39.8262662 | 14.68 | 24.38 | 20-25% | No | 0.053 |
| 6095252306 | 3303 | Solano | 94534 | Fairfield | -122.0643005 | 38.2655712 | 14.68 | 24.37 | 20-25% | No | 0.040 |
| 6073020902 | 2122 | San Diego | 91916 | Descanso | -116.6067039 | 32.9424839 | 14.68 | 24.35 | 20-25% | No | 0.053 |
| 6111006600 | 4019 | Ventura | 91360 | Thousand Oaks | -118.876471 | 34.2106411 | 14.68 | 24.34 | 20-25% | No | 0.048 |
| 6067009636 | 7672 | Sacramento | 95757 | Elk Grove | -121.4434549 | 38.4013466 | 14.67 | 24.33 | 20-25% | No | 0.048 |
| 6073019106 | 9131 | San Diego | 92082 | Valley Center | -116.9903688 | 33.2533185 | 14.66 | 24.32 | 20-25% | No | 0.048 |
| 6077004202 | 1687 | San Joaquin | 95240 | Lodi | -121.287501 | 38.1480447 | 14.65 | 24.30 | 20-25% | No | 0.046 |
| 6037900103 | 6170 | Los Angeles | 93535 | Lancaster | -117.8431551 | 34.6298162 | 14.65 | 24.29 | 20-25% | No | 0.065 |
| 6067009332 | 1425 | Sacramento | 95624 | Elk Grove | -121.339287 | 38.4381518 | 14.65 | 24.28 | 20-25% | No | 0.050 |
| 6075015100 | 2493 | San Francisco | 94109 | San Francisco | -122.4234011 | 37.7874457 | 14.65 | 24.27 | 20-25% | No | 0.030 |
| 6073019903 | 4371 | San Diego | 92084 | Vista | -117.1972424 | 33.1781581 | 14.64 | 24.25 | 20-25% | No | 0.046 |
| 6095250105 | 6678 | Solano | 94591 | Vallejo | -122.2141822 | 38.1295441 | 14.64 | 24.24 | 20-25% | No | 0.035 |
| 6111001401 | 3950 | Ventura | 93004 | Ventura | -119.1790275 | 34.2736288 | 14.63 | 24.23 | 20-25% | No | 0.044 |
| 6075022600 | 1534 | San Francisco | 94107 | San Francisco | -122.3835595 | 37.762479 | 14.63 | 24.21 | 20-25% | No | 0.030 |
| 6073020103 | 10235 | San Diego | 92027 | Escondido | -117.05572 | 33.1878229 | 14.63 | 24.20 | 20-25% | No | 0.048 |
| 6073020305 | 5984 | San Diego | 92026 | Escondido | -117.1089828 | 33.1505524 | 14.62 | 24.19 | 20-25% | No | 0.048 |
| 6085504420 | 4555 | Santa Clara | 95035 | Milpitas | -121.8680063 | 37.4597212 | 14.62 | 24.18 | 20-25% | No | 0.038 |
| 6067007207 | 4212 | Sacramento | 95626 | Elverta | -121.4297644 | 38.7064577 | 14.62 | 24.16 | 20-25% | No | 0.051 |
| 6081609202 | 3616 | San Mateo | 94070 | San Carlos | -122.2658697 | 37.5077822 | 14.62 | 24.15 | 20-25% | No | 0.033 |
| 6067009404 | 5921 | Sacramento | 95693 | Wilton | -121.1689727 | 38.3858209 | 14.62 | 24.14 | 20-25% | No | 0.051 |
| 6073009802 | 6101 | San Diego | 92119 | San Diego | -117.0140841 | 32.7968558 | 14.61 | 24.13 | 20-25% | No | 0.044 |
| 6059021827 | 3028 | Orange | 92887 | Yorba Linda | -117.7309183 | 33.8940999 | 14.61 | 24.11 | 20-25% | No | 0.053 |
| 6111005204 | 3367 | Ventura | 93010 | Camarillo | -119.0633871 | 34.2416836 | 14.61 | 24.10 | 20-25% | No | 0.044 |
| 6065030601 | 5249 | Riverside | 92506 | Riverside | -117.3619258 | 33.9200472 | 14.60 | 24.09 | 20-25% | No | 0.065 |
| 6063000501 | 2146 | Plumas | 96020 | Chester | -121.3550493 | 40.3853218 | 14.60 | 24.08 | 20-25% | No | 0.050 |
| 6037262704 | 3567 | Los Angeles | 90272 | Pacific Palisades | -118.5401653 | 34.042438 | 14.60 | 24.06 | 20-25% | No | 0.048 |
| 6037403407 | 2132 | Los Angeles | 91789 | Walnut | -117.8726572 | 34.0386078 | 14.59 | 24.05 | 20-25% | No | 0.053 |
| 6067009312 | 6535 | Sacramento | 95829 | Sacramento | -121.3629595 | 38.4586684 | 14.59 | 24.04 | 20-25% | No | 0.050 |
| 6059063004 | 5917 | Orange | 92660 | Newport Beach | -117.8827408 | 33.633742 | 14.58 | 24.03 | 20-25% | No | 0.044 |
| 6055201004 | 6081 | Napa | 94503 | American Canyon | -122.2397673 | 38.1612495 | 14.58 | 24.01 | 20-25% | No | 0.035 |
| 6059021822 | 7488 | Orange | 92886 | Yorba Linda | -117.7919997 | 33.9056824 | 14.58 | 24.00 | 20-25% | No | 0.051 |
| 6085512005 | 6711 | Santa Clara | 95136 | San Jose | -121.8655675 | 37.2700359 | 14.58 | 23.99 | 20-25% | No | 0.038 |
| 6001422400 | 4196 | Alameda | 94709 | Berkeley | -122.2695878 | 37.8752396 | 14.57 | 23.98 | 20-25% | No | 0.030 |
| 6055201500 | 1868 | Napa | 94574 | Saint Helena | -122.4673524 | 38.476171 | 14.56 | 23.96 | 20-25% | No | 0.033 |
| 6061020717 | 3118 | Placer | 95661 | Roseville | -121.2454961 | 38.7523499 | 14.56 | 23.95 | 20-25% | No | 0.053 |
| 6053013000 | 2968 | Monterey | 93940 | Monterey | -121.884531 | 36.5939065 | 14.55 | 23.94 | 20-25% | No | 0.033 |
| 6081607300 | 3529 | San Mateo | 94403 | San Mateo | -122.311952 | 37.5342151 | 14.55 | 23.92 | 20-25% | No | 0.033 |
| 6037408627 | 3079 | Los Angeles | 91748 | Rowland Heights | -117.9256372 | 33.9760426 | 14.54 | 23.91 | 20-25% | No | 0.048 |
| 6077004303 | 4610 | San Joaquin | 95242 | Lodi | -121.2973297 | 38.1227092 | 14.54 | 23.90 | 20-25% | No | 0.046 |
| 6073013313 | 9464 | San Diego | 91915 | Chula Vista | -116.9847218 | 32.6023181 | 14.53 | 23.89 | 20-25% | No | 0.038 |
| 6083001901 | 7805 | Santa Barbara | 93455 | Santa Maria | -120.1907893 | 34.743731 | 14.53 | 23.87 | 20-25% | No | 0.038 |
| 6097150304 | 6158 | Sonoma | 95476 | Sonoma | -122.4902094 | 38.306745 | 14.52 | 23.86 | 20-25% | No | 0.033 |
| 6067008704 | 3231 | Sacramento | 95742 | Rancho Cordova | -121.2333489 | 38.5533886 | 14.52 | 23.85 | 20-25% | No | 0.051 |
| 6089010602 | 5429 | Shasta | 96001 | Redding | -122.4214715 | 40.5830808 | 14.51 | 23.84 | 20-25% | No | 0.042 |
| 6035040302 | 4422 | Lassen | 96130 | Susanville | -120.6743 | 40.3618887 | 14.51 | 23.82 | 20-25% | No | 0.051 |
| 6037621326 | 3260 | Los Angeles | 90277 | Redondo Beach | -118.3903264 | 33.8222769 | 14.50 | 23.81 | 20-25% | No | 0.044 |
| 6067009615 | 7864 | Sacramento | 95758 | Elk Grove | -121.4340912 | 38.4284513 | 14.50 | 23.80 | 20-25% | No | 0.048 |
| 6037901007 | 2258 | Los Angeles | 93536 | Lancaster | -118.1855819 | 34.6538718 | 14.50 | 23.79 | 20-25% | No | 0.062 |
| 6111007903 | 4855 | Ventura | 93065 | Simi Valley | -118.7532358 | 34.2967394 | 14.49 | 23.77 | 20-25% | No | 0.055 |
| 6075022902 | 2617 | San Francisco | 94110 | San Francisco | -122.4103784 | 37.7513411 | 14.49 | 23.76 | 20-25% | No | 0.030 |
| 6073008361 | 2642 | San Diego | 92037 | La Jolla | -117.2341464 | 32.8680044 | 14.49 | 23.75 | 20-25% | No | 0.042 |
| 6067007106 | 7161 | Sacramento | 95835 | Sacramento | -121.489582 | 38.663527 | 14.49 | 23.74 | 20-25% | No | 0.048 |
| 6073020109 | 5127 | San Diego | 92027 | Escondido | -117.069255 | 33.1446753 | 14.49 | 23.72 | 20-25% | No | 0.048 |
| 6093000600 | 1847 | Siskiyou | 96032 | Fort Jones | -122.9107552 | 41.6997334 | 14.49 | 23.71 | 20-25% | No | 0.044 |
| 6037262100 | 3586 | Los Angeles | 90077 | Los Angeles | -118.4570806 | 34.1085369 | 14.48 | 23.70 | 20-25% | No | 0.048 |
| 6065048100 | 6404 | Riverside | 92882 | Corona | -117.5884128 | 33.81566 | 14.48 | 23.69 | 20-25% | No | 0.057 |
| 6053010305 | 4371 | Monterey | 93907 | Salinas | -121.6749633 | 36.8176147 | 14.48 | 23.67 | 20-25% | No | 0.035 |
| 6001428600 | 3271 | Alameda | 94501 | Alameda | -122.2738461 | 37.766273 | 14.47 | 23.66 | 20-25% | No | 0.030 |
| 6095252107 | 3592 | Solano | 94510 | Benicia | -122.1542954 | 38.0696665 | 14.47 | 23.65 | 20-25% | No | 0.035 |
| 6109003200 | 5765 | Tuolumne | 95346 | MI Wuk Village | -120.0887219 | 37.9292989 | 14.47 | 23.63 | 20-25% | No | 0.057 |
| 6097152904 | 5095 | Sonoma | 95403 | Santa Rosa | -122.7607066 | 38.4611543 | 14.46 | 23.62 | 20-25% | No | 0.030 |
| 6085504315 | 6562 | Santa Clara | 95132 | San Jose | -121.8596884 | 37.4093269 | 14.45 | 23.61 | 20-25% | No | 0.038 |
| 6001441523 | 4077 | Alameda | 94555 | Fremont | -122.0464869 | 37.5647793 | 14.45 | 23.60 | 20-25% | No | 0.035 |
| 6073018512 | 3397 | San Diego | 92057 | Oceanside | -117.3272179 | 33.2187427 | 14.44 | 23.58 | 20-25% | No | 0.042 |
| 6067008404 | 3275 | Sacramento | 95630 | Folsom | -121.175736 | 38.6759691 | 14.44 | 23.57 | 20-25% | No | 0.055 |
| 6059042103 | 7418 | Orange | 92672 | San Clemente | -117.6052417 | 33.4071994 | 14.43 | 23.56 | 20-25% | No | 0.048 |
| 6073018613 | 3477 | San Diego | 92058 | Oceanside | -117.3334798 | 33.237618 | 14.42 | 23.55 | 20-25% | No | 0.042 |
| 6067008142 | 3353 | Sacramento | 95610 | Citrus Heights | -121.282751 | 38.702848 | 14.42 | 23.53 | 20-25% | No | 0.053 |
| 6111008304 | 5484 | Ventura | 93063 | Simi Valley | -118.6580693 | 34.2669104 | 14.41 | 23.52 | 20-25% | No | 0.055 |
| 6095252106 | 4132 | Solano | 94510 | Benicia | -122.1678515 | 38.0752525 | 14.41 | 23.51 | 20-25% | No | 0.035 |
| 6037620102 | 3617 | Los Angeles | 90245 | El Segundo | -118.418063 | 33.9201935 | 14.40 | 23.50 | 20-25% | No | 0.044 |
| 6025940000 | 3052 | Imperial | 92283 | Winterhaven | -114.5840716 | 32.7799835 | 14.40 | 23.48 | 20-25% | No | 0.048 |
| 6065044807 | 1281 | Riverside | 92264 | Palm Springs | -116.4919557 | 33.7045459 | 14.40 | 23.47 | 20-25% | No | 0.068 |
| 6037910807 | 5489 | Los Angeles | 91387 | Canyon Country | -118.4105719 | 34.4410273 | 14.40 | 23.46 | 20-25% | No | 0.062 |
| 6061021108 | 2668 | Placer | 95677 | Rocklin | -121.237039 | 38.7818607 | 14.39 | 23.45 | 20-25% | No | 0.053 |
| 6037301400 | 3865 | Los Angeles | 91201 | Glendale | -118.2829278 | 34.1815516 | 14.39 | 23.43 | 20-25% | No | 0.055 |
| 6067008600 | 6784 | Sacramento | 95683 | Sloughhouse | -121.1180411 | 38.5074766 | 14.38 | 23.42 | 20-25% | No | 0.051 |
| 6061021501 | 5979 | Placer | 95603 | Auburn | -121.1180058 | 38.9192661 | 14.38 | 23.41 | 20-25% | No | 0.053 |
| 6067005801 | 5050 | Sacramento | 95864 | Sacramento | -121.355268 | 38.6027461 | 14.38 | 23.40 | 20-25% | No | 0.051 |
| 6001440332 | 3310 | Alameda | 94587 | Union City | -122.0858459 | 37.5819265 | 14.38 | 23.38 | 20-25% | No | 0.033 |
| 6095252000 | 4157 | Solano | 94510 | Benicia | -122.1791737 | 38.0621001 | 14.37 | 23.37 | 20-25% | No | 0.035 |
| 6071000111 | 2580 | San Bernardino | 91709 | Chino Hills | -117.7602431 | 33.9515994 | 14.36 | 23.36 | 20-25% | No | 0.055 |
| 6019004302 | 4848 | Fresno | 93711 | Fresno | -119.8311646 | 36.8300711 | 14.36 | 23.34 | 20-25% | No | 0.062 |
| 6073008902 | 2221 | San Diego | 92108 | San Diego | -117.179893 | 32.7635585 | 14.36 | 23.33 | 20-25% | No | 0.040 |
| 6077004703 | 3709 | San Joaquin | 95220 | Acampo | -121.0980636 | 38.228354 | 14.36 | 23.32 | 20-25% | No | 0.050 |
| 6057001206 | 6090 | Nevada | 96161 | Truckee | -120.1706073 | 39.331005 | 14.35 | 23.31 | 20-25% | No | 0.048 |
| 6037463500 | 5747 | Los Angeles | 91106 | Pasadena | -118.1269528 | 34.1384503 | 14.35 | 23.29 | 20-25% | No | 0.053 |
| 6001450746 | 3152 | Alameda | 94566 | Pleasanton | -121.8685809 | 37.6736928 | 14.35 | 23.28 | 20-25% | No | 0.038 |
| 6029003203 | 2383 | Kern | 93314 | Bakersfield | -119.1515136 | 35.3510229 | 14.35 | 23.27 | 20-25% | No | 0.062 |
| 6065043229 | 5127 | Riverside | 92562 | Murrieta | -117.2060351 | 33.5845532 | 14.34 | 23.26 | 20-25% | No | 0.057 |
| 6061020713 | 3222 | Placer | 95661 | Roseville | -121.2704703 | 38.7331219 | 14.34 | 23.24 | 20-25% | No | 0.053 |
| 6065043266 | 5215 | Riverside | 92591 | Temecula | -117.1314932 | 33.5116005 | 14.33 | 23.23 | 20-25% | No | 0.057 |
| 6057000802 | 6528 | Nevada | 95959 | Nevada City | -121.0452762 | 39.2511145 | 14.33 | 23.22 | 20-25% | No | 0.057 |
| 6029003813 | 7613 | Kern | 93312 | Bakersfield | -119.1422863 | 35.3608118 | 14.33 | 23.21 | 20-25% | No | 0.062 |
| 6067007905 | 4225 | Sacramento | 95608 | Carmichael | -121.3017946 | 38.642939 | 14.32 | 23.19 | 20-25% | No | 0.051 |
| 6059110004 | 4703 | Orange | 92845 | Garden Grove | -118.0222289 | 33.7774482 | 14.31 | 23.18 | 20-25% | No | 0.044 |
| 6083003004 | 4874 | Santa Barbara | 93111 | Santa Barbara | -119.8016253 | 34.432974 | 14.31 | 23.17 | 20-25% | No | 0.040 |
| 6095252801 | 2455 | Solano | 94535 | Travis AFB | -121.9458087 | 38.2790134 | 14.31 | 23.16 | 20-25% | No | 0.040 |
| 6067001600 | 5421 | Sacramento | 95819 | Sacramento | -121.4396846 | 38.5616628 | 14.30 | 23.14 | 20-25% | No | 0.048 |
| 6111008005 | 2788 | Ventura | 93065 | Simi Valley | -118.7657513 | 34.2590824 | 14.30 | 23.13 | 20-25% | No | 0.053 |
| 6065044925 | 3477 | Riverside | 92234 | Cathedral City | -116.4711902 | 33.8269186 | 14.30 | 23.12 | 20-25% | No | 0.068 |
| 6075047802 | 3656 | San Francisco | 94121 | San Francisco | -122.497393 | 37.779204 | 14.28 | 23.11 | 20-25% | No | 0.030 |
| 6059001706 | 3869 | Orange | 92835 | Fullerton | -117.9383193 | 33.8932937 | 14.27 | 23.09 | 20-25% | No | 0.046 |
| 6081601604 | 2510 | San Mateo | 94015 | Daly City | -122.4690804 | 37.6695059 | 14.27 | 23.08 | 20-25% | No | 0.030 |
| 6085502800 | 4102 | Santa Clara | 95124 | San Jose | -121.9230172 | 37.2556691 | 14.27 | 23.07 | 20-25% | No | 0.038 |
| 6067008124 | 4478 | Sacramento | 95610 | Citrus Heights | -121.2615645 | 38.7139956 | 14.25 | 23.05 | 20-25% | No | 0.053 |
| 6037430802 | 4163 | Los Angeles | 91006 | Arcadia | -118.0195541 | 34.1278975 | 14.24 | 23.04 | 20-25% | No | 0.051 |
| 6023010600 | 1798 | Humboldt | 95503 | Eureka | -124.0475318 | 40.7128464 | 14.24 | 23.03 | 20-25% | No | 0.026 |
| 6067007105 | 6725 | Sacramento | 95835 | Sacramento | -121.499765 | 38.677579 | 14.23 | 23.02 | 20-25% | No | 0.048 |
| 6045011200 | 3293 | Mendocino | 95466 | Philo | -123.4663027 | 39.1072742 | 14.23 | 23.00 | 20-25% | No | 0.038 |
| 6085506503 | 6045 | Santa Clara | 95008 | Campbell | -121.9547372 | 37.2856669 | 14.22 | 22.99 | 20-25% | No | 0.038 |
| 6037214700 | 2512 | Los Angeles | 90048 | Los Angeles | -118.3661529 | 34.0664969 | 14.22 | 22.98 | 20-25% | No | 0.048 |
| 6007000102 | 3900 | Butte | 95926 | Chico | -121.8235198 | 39.7578665 | 14.22 | 22.97 | 20-25% | No | 0.048 |
| 6001423602 | 5659 | Alameda | 94704 | Berkeley | -122.2592723 | 37.8631882 | 14.21 | 22.95 | 20-25% | No | 0.030 |
| 6067008120 | 4873 | Sacramento | 95610 | Citrus Heights | -121.2669975 | 38.6894179 | 14.20 | 22.94 | 20-25% | No | 0.053 |
| 6085506302 | 6388 | Santa Clara | 95117 | San Jose | -121.9568721 | 37.3089211 | 14.20 | 22.93 | 20-25% | No | 0.035 |
| 6065941300 | 3300 | Riverside | 92262 | Palm Springs | -116.5368326 | 33.8522106 | 14.19 | 22.92 | 20-25% | No | 0.068 |
| 6073010011 | 3633 | San Diego | 92154 | San Diego | -117.0547796 | 32.5795147 | 14.19 | 22.90 | 20-25% | No | 0.038 |
| 6075025600 | 5618 | San Francisco | 94134 | San Francisco | -122.4224279 | 37.7287139 | 14.19 | 22.89 | 20-25% | No | 0.030 |
| 6111007505 | 3324 | Ventura | 93065 | Simi Valley | -118.7806622 | 34.2611513 | 14.18 | 22.88 | 20-25% | No | 0.053 |
| 6059021828 | 4362 | Orange | 92887 | Yorba Linda | -117.7056802 | 33.8831822 | 14.18 | 22.87 | 20-25% | No | 0.055 |
| 6071008302 | 3106 | San Bernardino | 92373 | Redlands | -117.1899517 | 34.0296989 | 14.17 | 22.85 | 20-25% | No | 0.068 |
| 6111001900 | 3822 | Ventura | 93001 | Ventura | -119.2427572 | 34.2948152 | 14.16 | 22.84 | 20-25% | No | 0.046 |
| 6001423901 | 2020 | Alameda | 94703 | Berkeley | -122.2675177 | 37.8523001 | 14.16 | 22.83 | 20-25% | No | 0.030 |
| 6019006402 | 2973 | Fresno | 93664 | Shaver Lake | -119.0010211 | 37.2229999 | 14.16 | 22.81 | 20-25% | No | 0.065 |
| 6081608501 | 4829 | San Mateo | 94403 | San Mateo | -122.2888705 | 37.5373986 | 14.15 | 22.80 | 20-25% | No | 0.033 |
| 6065043272 | 4976 | Riverside | 92562 | Murrieta | -117.3024815 | 33.5515921 | 14.15 | 22.79 | 20-25% | No | 0.055 |
| 6113011204 | 4672 | Yolo | 95695 | Woodland | -121.7657298 | 38.6593278 | 14.15 | 22.78 | 20-25% | No | 0.046 |
| 6059075813 | 5069 | Orange | 92867 | Orange | -117.8264202 | 33.8313839 | 14.14 | 22.76 | 20-25% | No | 0.048 |
| 6113011500 | 5325 | Yolo | 95937 | Dunnigan | -122.1271651 | 38.8344702 | 14.14 | 22.75 | 20-25% | No | 0.042 |
| 6053010202 | 4386 | Monterey | 95076 | Watsonville | -121.6841172 | 36.8477738 | 14.13 | 22.74 | 20-25% | No | 0.038 |
| 6073017809 | 2293 | San Diego | 92008 | Carlsbad | -117.3266984 | 33.1575405 | 14.13 | 22.73 | 20-25% | No | 0.042 |
| 6037920118 | 6117 | Los Angeles | 91384 | Castaic | -118.6322617 | 34.4592531 | 14.12 | 22.71 | 20-25% | No | 0.060 |
| 6075015200 | 3934 | San Francisco | 94115 | San Francisco | -122.4302666 | 37.7879139 | 14.11 | 22.70 | 20-25% | No | 0.030 |
| 6039000108 | 7068 | Madera | 93614 | Coarsegold | -119.6833367 | 37.2553569 | 14.11 | 22.69 | 20-25% | No | 0.060 |
| 6017030602 | 6781 | El Dorado | 95634 | Georgetown | -120.8675255 | 38.9478957 | 14.09 | 22.68 | 20-25% | No | 0.055 |
| 6001450741 | 4768 | Alameda | 94566 | Pleasanton | -121.8647522 | 37.6602817 | 14.07 | 22.66 | 20-25% | No | 0.038 |
| 6085503331 | 3173 | Santa Clara | 95135 | San Jose | -121.7588033 | 37.2948902 | 14.07 | 22.65 | 20-25% | No | 0.038 |
| 6067008402 | 5505 | Sacramento | 95630 | Folsom | -121.1501466 | 38.6804975 | 14.06 | 22.64 | 20-25% | No | 0.055 |
| 6079012304 | 8954 | San Luis Obispo | 93444 | Nipomo | -120.5577925 | 35.0282995 | 14.06 | 22.63 | 20-25% | No | 0.035 |
| 6085512037 | 3214 | Santa Clara | 95123 | San Jose | -121.8246272 | 37.2411193 | 14.05 | 22.61 | 20-25% | No | 0.038 |
| 6089011300 | 5073 | Shasta | 96002 | Redding | -122.3356287 | 40.5666835 | 14.05 | 22.60 | 20-25% | No | 0.042 |
| 6045010100 | 2587 | Mendocino | 95428 | Covelo | -123.1572763 | 39.7629881 | 14.04 | 22.59 | 20-25% | No | 0.042 |
| 6081607800 | 3160 | San Mateo | 94403 | San Mateo | -122.2954266 | 37.5604085 | 14.04 | 22.58 | 20-25% | No | 0.033 |
| 6037400204 | 6454 | Los Angeles | 91750 | La Verne | -117.7540975 | 34.1305665 | 14.03 | 22.56 | 20-25% | No | 0.060 |
| 6065030603 | 2978 | Riverside | 92506 | Riverside | -117.3611853 | 33.9557504 | 14.03 | 22.55 | 20-25% | No | 0.065 |
| 6073020805 | 3501 | San Diego | 92065 | Ramona | -116.8935971 | 33.0328545 | 14.03 | 22.54 | 20-25% | No | 0.048 |
| 6067008005 | 4715 | Sacramento | 95628 | Fair Oaks | -121.208383 | 38.6479363 | 14.03 | 22.52 | 20-25% | No | 0.055 |
| 6081604000 | 3160 | San Mateo | 94066 | San Bruno | -122.4206868 | 37.6234201 | 14.02 | 22.51 | 20-25% | No | 0.030 |
| 6113010510 | 5267 | Yolo | 95616 | Davis | -121.7588849 | 38.5764422 | 14.01 | 22.50 | 20-25% | No | 0.044 |
| 6001441302 | 5553 | Alameda | 94536 | Fremont | -122.0194346 | 37.5693426 | 14.01 | 22.49 | 20-25% | No | 0.035 |
| 6097152201 | 3846 | Sonoma | 95404 | Santa Rosa | -122.7128443 | 38.4570299 | 14.00 | 22.47 | 20-25% | No | 0.030 |
| 6073020105 | 3801 | San Diego | 92026 | Escondido | -117.0971848 | 33.1596959 | 14.00 | 22.46 | 20-25% | No | 0.048 |
| 6065941000 | 3812 | Riverside | 92264 | Palm Springs | -116.4861035 | 33.7942098 | 14.00 | 22.45 | 20-25% | No | 0.068 |
| 6065043262 | 5122 | Riverside | 92592 | Temecula | -117.1054441 | 33.5081043 | 14.00 | 22.44 | 20-25% | No | 0.057 |
| 6065045304 | 8675 | Riverside | 92203 | Indio | -116.2164629 | 33.7444899 | 14.00 | 22.42 | 20-25% | No | 0.062 |
| 6037901004 | 12544 | Los Angeles | 93536 | Lancaster | -118.2080279 | 34.6862401 | 13.99 | 22.41 | 20-25% | No | 0.062 |
| 6037800203 | 5643 | Los Angeles | 91302 | Calabasas | -118.6726554 | 34.1607951 | 13.99 | 22.40 | 20-25% | No | 0.055 |
| 6073004300 | 3665 | San Diego | 92104 | San Diego | -117.1293851 | 32.7353586 | 13.99 | 22.39 | 20-25% | No | 0.040 |
| 6053013800 | 5548 | Monterey | 93955 | Seaside | -121.8296281 | 36.6129213 | 13.99 | 22.37 | 20-25% | No | 0.035 |
| 6085503329 | 3461 | Santa Clara | 95135 | San Jose | -121.7792597 | 37.3115068 | 13.99 | 22.36 | 20-25% | No | 0.038 |
| 6089011001 | 1668 | Shasta | 96001 | Redding | -122.4511152 | 40.5171512 | 13.98 | 22.35 | 20-25% | No | 0.042 |
| 6037462600 | 2324 | Los Angeles | 91104 | Pasadena | -118.1135074 | 34.1609655 | 13.97 | 22.34 | 20-25% | No | 0.053 |
| 6073013415 | 1567 | San Diego | 91910 | Chula Vista | -116.9983443 | 32.6383744 | 13.96 | 22.32 | 20-25% | No | 0.040 |
| 6075045100 | 4996 | San Francisco | 94118 | San Francisco | -122.4613476 | 37.777583 | 13.95 | 22.31 | 20-25% | No | 0.030 |
| 6065044924 | 3984 | Riverside | 92234 | Cathedral City | -116.4669443 | 33.8341094 | 13.95 | 22.30 | 20-25% | No | 0.068 |
| 6075015400 | 5621 | San Francisco | 94118 | San Francisco | -122.4510358 | 37.7843608 | 13.95 | 22.29 | 20-25% | No | 0.030 |
| 6007002000 | 5184 | Butte | 95969 | Paradise | -121.5862872 | 39.7589033 | 13.94 | 22.27 | 20-25% | No | 0.055 |
| 6037571200 | 7828 | Los Angeles | 90808 | Long Beach | -118.1336549 | 33.8395895 | 13.93 | 22.26 | 20-25% | No | 0.042 |
| 6073018609 | 6133 | San Diego | 92057 | Oceanside | -117.3150563 | 33.2501756 | 13.92 | 22.25 | 20-25% | No | 0.042 |
| 6061021046 | 4754 | Placer | 95678 | Roseville | -121.305388 | 38.7653645 | 13.92 | 22.23 | 20-25% | No | 0.053 |
| 6065940700 | 2613 | Riverside | 92264 | Palm Springs | -116.5231199 | 33.8054921 | 13.92 | 22.22 | 20-25% | No | 0.068 |
| 6045011102 | 3915 | Mendocino | 95468 | Point Arena | -123.5431611 | 38.8883615 | 13.91 | 22.21 | 20-25% | No | 0.038 |
| 6013304005 | 6738 | Contra Costa | 94513 | Brentwood | -121.595891 | 37.9347243 | 13.90 | 22.20 | 20-25% | No | 0.044 |
| 6065044923 | 3615 | Riverside | 92234 | Cathedral City | -116.4670932 | 33.8413521 | 13.88 | 22.18 | 20-25% | No | 0.068 |
| 6073020903 | 3192 | San Diego | 92086 | Warner Springs | -116.6970824 | 33.2564808 | 13.88 | 22.17 | 20-25% | No | 0.055 |
| 6051000200 | 8237 | Mono | 93546 | Mammoth Lakes | -118.9835861 | 37.6379125 | 13.88 | 22.16 | 20-25% | No | 0.062 |
| 6065045121 | 5457 | Riverside | 92253 | La Quinta | -116.2810566 | 33.6933189 | 13.87 | 22.15 | 20-25% | No | 0.062 |
| 6037503602 | 3793 | Los Angeles | 90638 | La Mirada | -117.9992604 | 33.911522 | 13.87 | 22.13 | 20-25% | No | 0.046 |
| 6113010703 | 5854 | Yolo | 95616 | Davis | -121.7633288 | 38.5536311 | 13.87 | 22.12 | 20-25% | No | 0.044 |
| 6001423902 | 1552 | Alameda | 94705 | Berkeley | -122.2573724 | 37.8547152 | 13.87 | 22.11 | 20-25% | No | 0.030 |

| | | | | | | | | | | |
|---|---|---|---|---|---|---|---|---|---|---|
| 6037577604 | 1388 | Los Angeles | 90803 | Long Beach | -118.1100855 | 33.7557499 | 13.84 | 22.01 | 20-25% | No |
| 6037461200 | 4443 | Los Angeles | 91001 | Altadena | -118.1154324 | 34.1809681 | 13.82 | 22.00 | 20-25% | No |
| 6073021302 | 7361 | San Diego | 91935 | Jamul | -116.7818507 | 32.6637754 | 13.81 | 21.98 | 20-25% | No |
| 6085504415 | 5116 | Santa Clara | 95035 | Milpitas | -121.8694198 | 37.4260378 | 13.80 | 21.97 | 20-25% | No |
| 6051000102 | 2502 | Mono | 93517 | Bridgeport | -119.1246145 | 38.2185656 | 13.80 | 21.96 | 20-25% | No |
| 6085502604 | 4320 | Santa Clara | 95008 | Campbell | -121.9372417 | 37.2837629 | 13.80 | 21.94 | 20-25% | No |
| 6081608004 | 6521 | San Mateo | 94404 | San Mateo | -122.2716583 | 37.5678278 | 13.79 | 21.93 | 20-25% | No |
| 6019005508 | 5796 | Fresno | 93619 | Clovis | -119.7387496 | 36.8593795 | 13.79 | 21.92 | 20-25% | No |
| 6023010300 | 3607 | Humboldt | 95525 | Blue Lake | -123.8882723 | 40.9265049 | 13.79 | 21.91 | 20-25% | No |
| 6085512045 | 5602 | Santa Clara | 95123 | San Jose | -121.8352576 | 37.2384727 | 13.78 | 21.89 | 20-25% | No |
| 6065044916 | 4650 | Riverside | 92234 | Cathedral City | -116.449391 | 33.7942301 | 13.78 | 21.88 | 20-25% | No |
| 6037651402 | 6050 | Los Angeles | 90505 | Torrance | -118.3446895 | 33.7959818 | 13.76 | 21.87 | 20-25% | No |
| 6073009106 | 3882 | San Diego | 92110 | San Diego | -117.1982516 | 32.7712924 | 13.76 | 21.86 | 20-25% | No |
| 6065043246 | 5906 | Riverside | 92592 | Temecula | -117.0704108 | 33.5134722 | 13.75 | 21.84 | 20-25% | No |
| 6059099306 | 6028 | Orange | 92648 | Huntington Beach | -117.9937244 | 33.6661556 | 13.74 | 21.83 | 20-25% | No |
| 6073017048 | 6123 | San Diego | 92064 | Poway | -117.0535531 | 32.9466011 | 13.73 | 21.82 | 20-25% | No |
| 6037920339 | 7377 | Los Angeles | 91355 | Valencia | -118.6121724 | 34.4153573 | 13.73 | 21.81 | 20-25% | No |
| 6017031000 | 6061 | El Dorado | 95667 | Placerville | -120.8454 | 38.7517688 | 13.72 | 21.79 | 20-25% | No |
| 6059042315 | 5900 | Orange | 92677 | Laguna Niguel | -117.6797302 | 33.5378006 | 13.72 | 21.78 | 20-25% | No |
| 6013324001 | 4615 | Contra Costa | 94597 | Walnut Creek | -122.0560841 | 37.9387253 | 13.72 | 21.77 | 20-25% | No |
| 6037620001 | 3943 | Los Angeles | 90245 | El Segundo | -118.40383 | 33.9274666 | 13.71 | 21.76 | 20-25% | No |
| 6037701601 | 4165 | Los Angeles | 90403 | Santa Monica | -118.4799628 | 34.0389491 | 13.71 | 21.74 | 20-25% | No |
| 6097153705 | 3536 | Sonoma | 95436 | Forestville | -122.9155637 | 38.5199533 | 13.71 | 21.73 | 20-25% | No |
| 6079010201 | 6981 | San Luis Obispo | 93446 | Paso Robles | -120.645087 | 35.6491478 | 13.71 | 21.72 | 20-25% | No |
| 6015000105 | 6967 | Del Norte | 95531 | Crescent City | -124.2978888 | 41.8023129 | 13.69 | 21.71 | 20-25% | No |
| 6037920331 | 4075 | Los Angeles | 91355 | Valencia | -118.545361 | 34.3971022 | 13.69 | 21.69 | 20-25% | No |
| 6001450751 | 2115 | Alameda | 94588 | Pleasanton | -121.8430342 | 37.7163164 | 13.69 | 21.68 | 20-25% | No |
| 6037400206 | 5328 | Los Angeles | 91711 | Claremont | -117.7152836 | 34.12744 | 13.68 | 21.67 | 20-25% | No |
| 6111005404 | 3870 | Ventura | 93010 | Camarillo | -119.0214631 | 34.2334501 | 13.68 | 21.65 | 20-25% | No |
| 6081603802 | 5056 | San Mateo | 94066 | San Bruno | -122.4345948 | 37.6190992 | 13.68 | 21.64 | 20-25% | No |
| 6071011403 | 3350 | San Bernardino | 92314 | Big Bear City | -116.8254603 | 34.2429726 | 13.68 | 21.63 | 20-25% | No |
| 6097151307 | 5174 | Sonoma | 94928 | Rohnert Park | -122.6996034 | 38.3705141 | 13.67 | 21.62 | 20-25% | No |
| 6075035300 | 7226 | San Francisco | 94116 | San Francisco | -122.4978433 | 37.7425001 | 13.67 | 21.60 | 20-25% | No |
| 6059099310 | 4482 | Orange | 92648 | Huntington Beach | -118.0104837 | 33.6625961 | 13.65 | 21.59 | 20-25% | No |
| 6061021322 | 8762 | Placer | 95747 | Roseville | -121.3951833 | 38.8437805 | 13.65 | 21.58 | 20-25% | No |
| 6001422700 | 4885 | Alameda | 94704 | Berkeley | -122.2495401 | 37.8679125 | 13.64 | 21.57 | 20-25% | No |
| 6075026302 | 4992 | San Francisco | 94112 | San Francisco | -122.4307918 | 37.7116589 | 13.64 | 21.55 | 20-25% | No |
| 6085510801 | 5290 | Santa Clara | 94303 | Palo Alto | -122.1097683 | 37.4270192 | 13.62 | 21.54 | 20-25% | No |
| 6037574300 | 5795 | Los Angeles | 90815 | Long Beach | -118.118082 | 33.7994363 | 13.62 | 21.53 | 20-25% | No |
| 6013359204 | 4702 | Contra Costa | 94547 | Hercules | -122.2654576 | 38.0000841 | 13.60 | 21.52 | 20-25% | No |
| 6095253106 | 3296 | Solano | 95687 | Vacaville | -121.9660433 | 38.3417484 | 13.59 | 21.50 | 20-25% | No |
| 6029005403 | 8379 | Kern | 93555 | Ridgecrest | -117.6880081 | 35.6079827 | 13.59 | 21.49 | 20-25% | No |
| 6073021600 | 3391 | San Diego | 92118 | Coronado | -117.1561371 | 32.6572021 | 13.59 | 21.48 | 20-25% | No |
| 6067009632 | 6811 | Sacramento | 95757 | Elk Grove | -121.4255447 | 38.4014985 | 13.58 | 21.47 | 20-25% | No |
| 6061021103 | 3797 | Placer | 95677 | Rocklin | -121.2279836 | 38.7956489 | 13.58 | 21.45 | 20-25% | No |
| 6037265601 | 2890 | Los Angeles | 90024 | Los Angeles | -118.4327259 | 34.0558599 | 13.58 | 21.44 | 20-25% | No |
| 6087100800 | 6873 | Santa Cruz | 95062 | Santa Cruz | -122.0156066 | 36.9739622 | 13.57 | 21.43 | 20-25% | No |
| 6075025300 | 4362 | San Francisco | 94110 | San Francisco | -122.4201527 | 37.7437059 | 13.57 | 21.42 | 20-25% | No |
| 6067007431 | 3355 | Sacramento | 95843 | Antelope | -121.3876534 | 38.7222559 | 13.57 | 21.40 | 20-25% | No |
| 6057000702 | 3968 | Nevada | 95945 | Grass Valley | -121.0072079 | 39.160347 | 13.57 | 21.39 | 20-25% | No |
| 6037403405 | 1631 | Los Angeles | 91789 | Walnut | -117.8420545 | 34.0509011 | 13.56 | 21.38 | 20-25% | No |
| 6073008357 | 4345 | San Diego | 92126 | San Diego | -117.135326 | 32.9164937 | 13.55 | 21.36 | 20-25% | No |
| 6037264103 | 2319 | Los Angeles | 90049 | Los Angeles | -118.4662763 | 34.0549771 | 13.54 | 21.35 | 20-25% | No |
| 6059099513 | 2141 | Orange | 92649 | Huntington Beach | -118.0656938 | 33.7193851 | 13.53 | 21.34 | 20-25% | No |
| 6085502701 | 4874 | Santa Clara | 95008 | Campbell | -121.9375772 | 37.2708696 | 13.51 | 21.33 | 20-25% | No |
| 6037920020 | 6954 | Los Angeles | 91390 | Santa Clarita | -118.4998492 | 34.4737154 | 13.50 | 21.31 | 20-25% | No |
| 6095253206 | 3102 | Solano | 95688 | Vacaville | -121.9742566 | 38.3962812 | 13.50 | 21.30 | 20-25% | No |
| 6085504202 | 4530 | Santa Clara | 95127 | San Jose | -121.7922139 | 37.3764316 | 13.49 | 21.29 | 20-25% | No |
| 6111008305 | 3819 | Ventura | 93063 | Simi Valley | -118.660056 | 34.2944257 | 13.49 | 21.28 | 20-25% | No |
| 6017030401 | 3498 | El Dorado | 96150 | South Lake Tahoe | -120.0049792 | 38.9276421 | 13.49 | 21.26 | 20-25% | No |
| 6095252315 | 4393 | Solano | 94533 | Fairfield | -122.0150107 | 38.2840121 | 13.48 | 21.25 | 20-25% | No |
| 6095252915 | 3506 | Solano | 95687 | Vacaville | -121.9245995 | 38.3191193 | 13.47 | 21.24 | 20-25% | No |
| 6073013421 | 4695 | San Diego | 91910 | Chula Vista | -117.0210214 | 32.6453703 | 13.47 | 21.23 | 20-25% | No |
| 6073013506 | 3509 | San Diego | 91978 | Spring Valley | -116.9605154 | 32.7223766 | 13.47 | 21.21 | 20-25% | No |
| 6067008203 | 4760 | Sacramento | 95662 | Orangevale | -121.2324674 | 38.6986392 | 13.47 | 21.20 | 20-25% | No |
| 6043000302 | 2706 | Mariposa | 95338 | Mariposa | -119.7878947 | 37.5805409 | 13.47 | 21.19 | 20-25% | No |
| 6055200707 | 3152 | Napa | 94558 | Napa | -122.3205427 | 38.3234476 | 13.46 | 21.18 | 20-25% | No |
| 6059063007 | 6958 | Orange | 92660 | Newport Beach | -117.868556 | 33.6333298 | 13.46 | 21.16 | 20-25% | No |
| 6073017035 | 2354 | San Diego | 92129 | San Diego | -117.0988796 | 32.9749586 | 13.46 | 21.15 | 20-25% | No |
| 6007001600 | 5266 | Butte | 95942 | Forest Ranch | -121.6693104 | 39.9107695 | 13.45 | 21.14 | 20-25% | No |
| 6037500202 | 4935 | Los Angeles | 90605 | Whittier | -117.9940889 | 33.9613945 | 13.42 | 21.12 | 20-25% | No |
| 6059032054 | 5288 | Orange | 92688 | Rancho Santa Margar | -117.5952959 | 33.6388098 | 13.41 | 21.11 | 20-25% | No |
| 6037272100 | 4354 | Los Angeles | 90066 | Los Angeles | -118.4422881 | 34.0037101 | 13.41 | 21.10 | 20-25% | No |
| 6059021810 | 3627 | Orange | 92870 | Placentia | -117.8351052 | 33.8843552 | 13.41 | 21.09 | 20-25% | No |
| 6111001102 | 3539 | Ventura | 93022 | Oak View | -119.2816961 | 34.4174987 | 13.40 | 21.07 | 20-25% | No |
| 6067007417 | 3012 | Sacramento | 95843 | Antelope | -121.3948906 | 38.7139046 | 13.39 | 21.06 | 20-25% | No |
| 6037651222 | 6211 | Los Angeles | 90505 | Torrance | -118.358157 | 33.8119503 | 13.39 | 21.05 | 20-25% | No |
| 6057000105 | 2792 | Nevada | 95949 | Grass Valley | -121.1014847 | 39.068005 | 13.37 | 21.04 | 20-25% | No |
| 6073016610 | 4163 | San Diego | 92071 | Santee | -116.9800224 | 32.8584892 | 13.37 | 21.02 | 20-25% | No |
| 6113010508 | 2453 | Yolo | 95616 | Davis | -121.7984692 | 38.5541301 | 13.37 | 21.01 | 20-25% | No |
| 6067009622 | 7222 | Sacramento | 95758 | Elk Grove | -121.4672586 | 38.4113937 | 13.36 | 21.00 | 20-25% | No |
| 6073017404 | 6338 | San Diego | 92024 | Encinitas | -117.2649644 | 33.0221644 | 13.36 | 20.99 | 20-25% | No |
| 6059052505 | 4916 | Orange | 92604 | Irvine | -117.7753572 | 33.6925617 | 13.35 | 20.97 | 20-25% | No |
| 6037267902 | 3375 | Los Angeles | 90064 | Los Angeles | -118.4201983 | 34.0475522 | 13.35 | 20.96 | 20-25% | No |
| 6073022100 | 9082 | San Diego | 92008 | Carlsbad | -117.2924294 | 33.124262 | 13.35 | 20.95 | 20-25% | No |
| 6085512034 | 3101 | Santa Clara | 95139 | San Jose | -121.7707427 | 37.2293402 | 13.35 | 20.94 | 20-25% | No |
| 6075026303 | 4551 | San Francisco | 94112 | San Francisco | -122.4434663 | 37.7096646 | 13.34 | 20.92 | 20-25% | No |
| 6021010502 | 1564 | Glenn | 95943 | Glenn | -122.0272696 | 39.5091976 | 13.33 | 20.91 | 20-25% | No |
| 6059052426 | 7957 | Orange | 92618 | Irvine | -117.6863395 | 33.7077389 | 13.33 | 20.90 | 20-25% | No |
| 6061021502 | 3554 | Placer | 95603 | Auburn | -121.0567377 | 38.922298 | 13.32 | 20.89 | 20-25% | No |
| 6065043218 | 5597 | Riverside | 92591 | Temecula | -117.1188981 | 33.5318882 | 13.31 | 20.87 | 20-25% | No |
| 6001451704 | 4449 | Alameda | 94550 | Livermore | -121.7900626 | 37.6621232 | 13.30 | 20.86 | 20-25% | No |
| 6013334004 | 7367 | Contra Costa | 94521 | Concord | -121.9882643 | 37.9600453 | 13.28 | 20.85 | 20-25% | No |
| 6079012000 | 7232 | San Luis Obispo | 93433 | Grover Beach | -120.6127502 | 35.1183559 | 13.28 | 20.83 | 20-25% | No |
| 6097150610 | 4004 | Sonoma | 94954 | Petaluma | -122.6401777 | 38.2654848 | 13.27 | 20.82 | 20-25% | No |
| 6095250104 | 2280 | Solano | 94591 | Vallejo | -122.2081589 | 38.1138506 | 13.27 | 20.81 | 20-25% | No |
| 6073017604 | 7040 | San Diego | 92024 | Encinitas | -117.2731463 | 33.0553213 | 13.27 | 20.80 | 20-25% | No |
| 6037400402 | 4125 | Los Angeles | 91741 | Glendora | -117.8240886 | 34.1356427 | 13.26 | 20.78 | 20-25% | No |
| 6061021603 | 4549 | Placer | 95602 | Auburn | -121.1106507 | 38.9522451 | 13.25 | 20.77 | 20-25% | No |
| 6075016400 | 3778 | San Francisco | 94117 | San Francisco | -122.4369729 | 37.7750995 | 13.25 | 20.76 | 20-25% | No |
| 6017030200 | 4773 | El Dorado | 96150 | South Lake Tahoe | -119.9602888 | 38.9313103 | 13.24 | 20.75 | 20-25% | No |
| 6073013604 | 6147 | San Diego | 92019 | El Cajon | -116.9177769 | 32.7537863 | 13.22 | 20.73 | 20-25% | No |
| 6059075604 | 7487 | Orange | 92705 | Santa Ana | -117.7854284 | 33.7789497 | 13.20 | 20.72 | 20-25% | No |
| 6111005700 | 2068 | Ventura | 93012 | Camarillo | -119.0440952 | 34.1672985 | 13.20 | 20.71 | 20-25% | No |
| 6065047202 | 1929 | Riverside | 92241 | Desert Hot Springs | -116.3491585 | 33.9067325 | 13.20 | 20.70 | 20-25% | No |
| 6113011103 | 3118 | Yolo | 95776 | Woodland | -121.7516431 | 38.670029 | 13.19 | 20.68 | 20-25% | No |
| 6085512503 | 7726 | Santa Clara | 95020 | Gilroy | -121.6351266 | 37.0355435 | 13.19 | 20.67 | 20-25% | No |
| 6073020106 | 3803 | San Diego | 92026 | Escondido | -117.0867344 | 33.1501424 | 13.19 | 20.66 | 20-25% | No |
| 6089010806 | 3192 | Shasta | 96003 | Redding | -122.3804645 | 40.6379428 | 13.18 | 20.65 | 20-25% | No |
| 6067008008 | 4610 | Sacramento | 95628 | Fair Oaks | -121.2582304 | 38.6584824 | 13.17 | 20.63 | 20-25% | No |
| 6073020705 | 4635 | San Diego | 92027 | Escondido | -117.0549135 | 33.116245 | 13.17 | 20.62 | 20-25% | No |
| 6073009305 | 4488 | San Diego | 92123 | San Diego | -117.1278103 | 32.7912089 | 13.17 | 20.61 | 20-25% | No |
| 6067005701 | 3060 | Sacramento | 95864 | Sacramento | -121.3738164 | 38.6029975 | 13.17 | 20.60 | 20-25% | No |
| 6037920114 | 6490 | Los Angeles | 91355 | Valencia | -118.5621967 | 34.4314807 | 13.17 | 20.58 | 20-25% | No |
| 6013359202 | 6148 | Contra Costa | 94564 | Pinole | -122.2510378 | 37.9837578 | 13.16 | 20.57 | 20-25% | No |
| 6085507701 | 4039 | Santa Clara | 95014 | Cupertino | -122.0493596 | 37.3185985 | 13.16 | 20.56 | 20-25% | No |
| 6065042733 | 4234 | Riverside | 92584 | Menifee | -117.2267409 | 33.6652208 | 13.15 | 20.54 | 20-25% | No |
| 6071000814 | 3832 | San Bernardino | 91784 | Upland | -117.6602406 | 34.141776 | 13.15 | 20.53 | 20-25% | No |
| 6081604800 | 5059 | San Mateo | 94030 | Millbrae | -122.3977958 | 37.5995339 | 13.15 | 20.52 | 20-25% | No |
| 6083002808 | 6506 | Santa Barbara | 93436 | Lompoc | -120.4679785 | 34.7210823 | 13.15 | 20.51 | 20-25% | No |
| 6085506605 | 3941 | Santa Clara | 95130 | San Jose | -121.9693447 | 37.2973663 | 13.15 | 20.49 | 20-25% | No |
| 6089012500 | 1477 | Shasta | 96051 | Lakehead | -122.3666461 | 40.9866263 | 13.14 | 20.48 | 20-25% | No |
| 6065044932 | 3067 | Riverside | 92234 | Cathedral City | -116.4495502 | 33.826972 | 13.14 | 20.47 | 20-25% | No |
| 6073008341 | 7614 | San Diego | 92037 | La Jolla | -117.2175075 | 32.8692105 | 13.14 | 20.46 | 20-25% | No |
| 6073008339 | 1853 | San Diego | 92121 | San Diego | -117.231235 | 32.9028483 | 13.14 | 20.44 | 20-25% | No |
| 6073008502 | 6241 | San Diego | 92117 | San Diego | -117.206765 | 32.8373057 | 13.13 | 20.43 | 20-25% | No |
| 6073008344 | 3462 | San Diego | 92122 | San Diego | -117.1962537 | 32.8583742 | 13.13 | 20.42 | 20-25% | No |
| 6001407700 | 4109 | Alameda | 94619 | Oakland | -122.1931965 | 37.7765228 | 13.11 | 20.41 | 20-25% | No |
| 6037577100 | 6700 | Los Angeles | 90814 | Long Beach | -118.1480649 | 33.7707927 | 13.11 | 20.39 | 20-25% | No |
| 6059032013 | 4984 | Orange | 92691 | Mission Viejo | -117.6651142 | 33.5727477 | 13.11 | 20.38 | 20-25% | No |
| 6081602800 | 4522 | San Mateo | 94044 | Pacifica | -122.4838992 | 37.6594652 | 13.10 | 20.37 | 20-25% | No |
| 6037296401 | 3191 | Los Angeles | 90732 | San Pedro | -118.3150067 | 33.7411716 | 13.09 | 20.36 | 20-25% | No |
| 6085506603 | 4070 | Santa Clara | 95008 | Campbell | -121.9693371 | 37.2821666 | 13.09 | 20.34 | 20-25% | No |
| 6055200705 | 2776 | Napa | 94558 | Napa | -122.3106008 | 38.3056856 | 13.08 | 20.33 | 20-25% | No |
| 6065044518 | 5232 | Riverside | 92240 | Desert Hot Springs | -116.4887516 | 33.9732868 | 13.08 | 20.32 | 20-25% | No |
| 6001451701 | 3102 | Alameda | 94550 | Livermore | -121.787947 | 37.6721084 | 13.08 | 20.31 | 20-25% | No |
| 6059099504 | 2746 | Orange | 90740 | Seal Beach | -118.0942214 | 33.7535479 | 13.07 | 20.29 | 20-25% | No |
| 6049000200 | 1910 | Modoc | 96056 | McArthur | -121.2561842 | 41.5000454 | 13.07 | 20.28 | 20-25% | No |
| 6055200504 | 6431 | Napa | 94558 | Napa | -122.2915765 | 38.3170915 | 13.07 | 20.27 | 20-25% | No |
| 6087121401 | 2683 | Santa Cruz | 95062 | Santa Cruz | -121.9871043 | 36.9820909 | 13.06 | 20.25 | 20-25% | No |
| 6081608400 | 5546 | San Mateo | 94403 | San Mateo | -122.2787573 | 37.5436595 | 13.06 | 20.24 | 20-25% | No |
| 6001422300 | 3387 | Alameda | 94703 | Berkeley | -122.2779152 | 37.8740723 | 13.04 | 20.23 | 20-25% | No |
| 6073019101 | 7458 | San Diego | 92061 | Pauma Valley | -117.0114926 | 33.3358648 | 13.04 | 20.22 | 20-25% | No |
| 6111008402 | 5110 | Ventura | 93063 | Simi Valley | -118.6825555 | 34.3349364 | 13.04 | 20.20 | 20-25% | No |
| 6081602700 | 5795 | San Mateo | 94044 | Pacifica | -122.4753009 | 37.6486936 | 13.04 | 20.19 | 20-25% | No |
| 6071011102 | 2031 | San Bernardino | 92314 | Big Bear City | -117.0878551 | 34.2553357 | 13.03 | 20.18 | 20-25% | No |
| 6037920044 | 2686 | Los Angeles | 91350 | Santa Clarita | -118.5164043 | 34.4435485 | 13.03 | 20.17 | 20-25% | No |
| 6071009108 | 6825 | San Bernardino | 92371 | Phelan | -117.5382961 | 34.4739103 | 13.03 | 20.15 | 20-25% | No |
| 6085502901 | 5919 | Santa Clara | 95124 | San Jose | -121.9270197 | 37.2713891 | 13.03 | 20.14 | 20-25% | No |
| 6023010200 | 2983 | Humboldt | 95570 | Trinidad | -124.0324312 | 41.1893421 | 13.03 | 20.13 | 20-25% | No |
| 6007001400 | 5797 | Butte | 95973 | Chico | -121.9334044 | 39.7860101 | 13.03 | 20.12 | 20-25% | No |
| 6075040200 | 5191 | San Francisco | 94118 | San Francisco | -122.4683889 | 37.7843252 | 13.03 | 20.10 | 20-25% | No |
| 6037134424 | 2887 | Los Angeles | 91304 | Canoga Park | -118.6565649 | 34.2135699 | 13.02 | 20.09 | 20-25% | No |
| 6037403305 | 2100 | Los Angeles | 91765 | Diamond Bar | -117.8483535 | 33.9779399 | 13.02 | 20.08 | 20-25% | No |
| 6059021905 | 5485 | Orange | 92807 | Anaheim | -117.7728166 | 33.8582082 | 13.01 | 20.07 | 20-25% | No |
| 6071008708 | 4352 | San Bernardino | 92399 | Yucaipa | -117.0304418 | 34.0150028 | 13.01 | 20.05 | 20-25% | No |
| 6059042327 | 4814 | Orange | 92653 | Laguna Hills | -117.6924249 | 33.5874584 | 13.00 | 20.04 | 20-25% | No |
| 6073021303 | 8981 | San Diego | 91935 | Jamul | -116.9017298 | 32.7210437 | 13.00 | 20.03 | 20-25% | No |
| 6059063806 | 3790 | Orange | 92626 | Costa Mesa | -117.9339427 | 33.6818524 | 13.00 | 20.02 | 20-25% | No |
| 6085512305 | 3936 | Santa Clara | 95037 | Morgan Hill | -121.6732158 | 37.1141601 | 12.99 | 20.00 | 20-25% | No |
| 6095252108 | 3165 | Solano | 94510 | Benicia | -122.1630224 | 38.0608147 | 12.98 | 19.99 | 15-20% | No |
| 6001450102 | 9434 | Alameda | 94568 | Dublin | -121.8911928 | 37.7208265 | 12.98 | 19.98 | 15-20% | No |
| 6093001100 | 2175 | Siskiyou | 96025 | Dunsmuir | -122.3920674 | 41.2126953 | 12.97 | 19.96 | 15-20% | No |
| 6085512023 | 5418 | Santa Clara | 95123 | San Jose | -121.8243568 | 37.2550475 | 12.97 | 19.95 | 15-20% | No |
| 6073009102 | 3537 | San Diego | 92117 | San Diego | -117.1955335 | 32.8035298 | 12.97 | 19.94 | 15-20% | No |
| 6079010901 | 8319 | San Luis Obispo | 93405 | San Luis Obispo | -120.6470923 | 35.3053173 | 12.95 | 19.93 | 15-20% | No |
| 6037276604 | 3983 | Los Angeles | 90045 | Los Angeles | -118.4248557 | 33.9571656 | 12.95 | 19.91 | 15-20% | No |
| 6111000903 | 5865 | Ventura | 93023 | Ojai | -119.1567105 | 34.4750754 | 12.95 | 19.90 | 15-20% | No |
| 6111003010 | 2885 | Ventura | 93036 | Oxnard | -119.1820294 | 34.2233671 | 12.94 | 19.89 | 15-20% | No |
| 6073021400 | 7225 | San Diego | 92106 | San Diego | -117.219952 | 32.7323401 | 12.94 | 19.88 | 15-20% | No |
| 6097151301 | 4587 | Sonoma | 94928 | Rohnert Park | -122.7001886 | 38.3342135 | 12.94 | 19.86 | 15-20% | No |
| 6083001601 | 5270 | Santa Barbara | 93013 | Carpinteria | -119.5173821 | 34.4052646 | 12.93 | 19.85 | 15-20% | No |
| 6001441521 | 5869 | Alameda | 94555 | Fremont | -122.0532609 | 37.5729294 | 12.93 | 19.84 | 15-20% | No |
| 6041101200 | 2682 | Marin | 94945 | Novato | -122.5402875 | 38.0982314 | 12.93 | 19.83 | 15-20% | No |
| 6061021801 | 4522 | Placer | 95602 | Auburn | -121.0699172 | 38.9814721 | 12.90 | 19.81 | 15-20% | No |
| 6109002200 | 8132 | Tuolumne | 95370 | Sonora | -120.2986345 | 38.0191545 | 12.90 | 19.80 | 15-20% | No |
| 6059042106 | 1377 | Orange | 92672 | San Clemente | -117.6336425 | 33.4385746 | 12.90 | 19.79 | 15-20% | No |
| 6067008508 | 6825 | Sacramento | 95630 | Folsom | -121.1274845 | 38.6395899 | 12.89 | 19.78 | 15-20% | No |
| 6001407900 | 2706 | Alameda | 94619 | Oakland | -122.1847835 | 37.7884276 | 12.89 | 19.76 | 15-20% | No |
| 6013337100 | 3200 | Contra Costa | 94518 | Concord | -122.0148138 | 37.9572014 | 12.87 | 19.75 | 15-20% | No |
| 6079012503 | 5240 | San Luis Obispo | 93422 | Atascadero | -120.6426906 | 35.4713741 | 12.87 | 19.74 | 15-20% | No |
| 6079011501 | 1783 | San Luis Obispo | 93401 | San Luis Obispo | -120.6778626 | 35.2456617 | 12.86 | 19.73 | 15-20% | No |
| 6039000109 | 2392 | Madera | 93653 | Raymond | -119.8802873 | 37.1891883 | 12.85 | 19.71 | 15-20% | No |
| 6001443102 | 4611 | Alameda | 94539 | Fremont | -121.9271478 | 37.5071611 | 12.84 | 19.70 | 15-20% | No |
| 6055200400 | 3618 | Napa | 94558 | Napa | -122.2620126 | 38.3111988 | 12.84 | 19.69 | 15-20% | No |
| 6013320003 | 2805 | Contra Costa | 94553 | Martinez | -122.1074312 | 37.9987257 | 12.83 | 19.67 | 15-20% | No |
| 6081604500 | 3402 | San Mateo | 94030 | Millbrae | -122.4100389 | 37.6061891 | 12.83 | 19.66 | 15-20% | No |
| 6037577200 | 5414 | Los Angeles | 90803 | Long Beach | -118.15344 | 33.7601259 | 12.83 | 19.65 | 15-20% | No |
| 6105000102 | 4558 | Trinity | 96052 | Lewiston | -122.8246948 | 41.0094335 | 12.82 | 19.64 | 15-20% | No |
| 6097152203 | 3527 | Sonoma | 95404 | Santa Rosa | -122.7070355 | 38.4483381 | 12.82 | 19.62 | 15-20% | No |
| 6087120200 | 4283 | Santa Cruz | 95017 | Davenport | -122.1775027 | 37.102398 | 12.81 | 19.61 | 15-20% | No |
| 6059063400 | 4795 | Orange | 92663 | Newport Beach | -117.9165233 | 33.6209027 | 12.80 | 19.60 | 15-20% | No |
| 6067008206 | 5638 | Sacramento | 95662 | Orangevale | -121.2146576 | 38.6722963 | 12.79 | 19.59 | 15-20% | No |
| 6085503330 | 7618 | Santa Clara | 95135 | San Jose | -121.7397981 | 37.3090443 | 12.78 | 19.57 | 15-20% | No |
| 6037480600 | 7863 | Los Angeles | 91030 | South Pasadena | -118.1551292 | 34.1193401 | 12.77 | 19.56 | 15-20% | No |
| 6001406800 | 3428 | Alameda | 94602 | Oakland | -122.1949575 | 37.7978944 | 12.77 | 19.55 | 15-20% | No |
| 6073008355 | 3365 | San Diego | 92126 | San Diego | -117.1266054 | 32.9217552 | 12.76 | 19.54 | 15-20% | No |
| 6101050504 | 7163 | Sutter | 95993 | Yuba City | -121.6619167 | 39.0906987 | 12.76 | 19.52 | 15-20% | No |
| 6065044911 | 4617 | Riverside | 92211 | Palm Desert | -116.314579 | 33.7315855 | 12.74 | 19.51 | 15-20% | No |
| 6085506102 | 3808 | Santa Clara | 95051 | Santa Clara | -121.9714315 | 37.3314684 | 12.74 | 19.50 | 15-20% | No |
| 6013360200 | 4626 | Contra Costa | 94803 | El Sobrante | -122.2944086 | 37.9689098 | 12.74 | 19.49 | 15-20% | No |
| 6037192002 | 2735 | Los Angeles | 90036 | Los Angeles | -118.3553201 | 34.0835415 | 12.73 | 19.47 | 15-20% | No |
| 6037430003 | 4604 | Los Angeles | 91016 | Monrovia | -117.9422558 | 34.1722232 | 12.73 | 19.46 | 15-20% | No |
| 6085507905 | 5784 | Santa Clara | 95129 | San Jose | -122.028113 | 37.3026314 | 12.73 | 19.45 | 15-20% | No |
| 6037574000 | 5277 | Los Angeles | 90808 | Long Beach | -118.1017387 | 33.8144739 | 12.72 | 19.43 | 15-20% | No |
| 6087100700 | 2632 | Santa Cruz | 95060 | Santa Cruz | -122.0288693 | 36.9772909 | 12.71 | 19.42 | 15-20% | No |
| 6103000200 | 7705 | Tehama | 96022 | Cottonwood | -122.3353367 | 40.3210457 | 12.70 | 19.41 | 15-20% | No |
| 6085505402 | 3026 | Santa Clara | 95051 | Santa Clara | -121.9734997 | 37.3461125 | 12.70 | 19.40 | 15-20% | No |
| 6059052420 | 21098 | Orange | 92602 | Irvine | -117.7352311 | 33.7430213 | 12.70 | 19.38 | 15-20% | No |
| 6073017030 | 17064 | San Diego | 92127 | San Diego | -117.1226724 | 33.031018 | 12.69 | 19.37 | 15-20% | No |
| 6085511100 | 5445 | Santa Clara | 94303 | Palo Alto | -122.1325201 | 37.4457476 | 12.69 | 19.36 | 15-20% | No |
| 6073008349 | 3514 | San Diego | 92126 | San Diego | -117.1487913 | 32.9166879 | 12.68 | 19.35 | 15-20% | No |
| 6071002014 | 4846 | San Bernardino | 91701 | Rancho Cucamonga | -117.6274307 | 34.146438 | 12.68 | 19.33 | 15-20% | No |
| 6029002811 | 3854 | Kern | 93311 | Bakersfield | -119.1201184 | 35.3371406 | 12.68 | 19.32 | 15-20% | No |
| 6073013418 | 5998 | San Diego | 91913 | Chula Vista | -116.977811 | 32.6499238 | 12.68 | 19.31 | 15-20% | No |
| 6081605400 | 6147 | San Mateo | 94010 | Burlingame | -122.3446065 | 37.5870019 | 12.67 | 19.30 | 15-20% | No |
| 6001403702 | 1724 | Alameda | 94610 | Oakland | -122.2520804 | 37.8095265 | 12.67 | 19.28 | 15-20% | No |
| 6037408722 | 4400 | Los Angeles | 91748 | Rowland Heights | -117.9023573 | 33.9700289 | 12.66 | 19.27 | 15-20% | No |
| 6073018612 | 3331 | San Diego | 92057 | Oceanside | -117.2609565 | 33.2550012 | 12.65 | 19.26 | 15-20% | No |
| 6085508204 | 4194 | Santa Clara | 94087 | Sunnyvale | -122.0178787 | 37.3445479 | 12.62 | 19.25 | 15-20% | No |
| 6001430700 | 3814 | Alameda | 94546 | Castro Valley | -122.0822257 | 37.7060949 | 12.62 | 19.23 | 15-20% | No |

| | | | | | | | | | |
|---|---|---|---|---|---|---|---|---|---|
| 6089011600 | 3877 | Shasta | 96003 | Redding | -122.4184426 | 40.6694846 | 12.62 | 19.22 | 15-20% | No |
| 6075042601 | 3687 | San Francisco | 94121 | San Francisco | -122.4811913 | 37.7831165 | 12.61 | 19.21 | 15-20% | No |
| 6037480012 | 4763 | Los Angeles | 91775 | San Gabriel | -118.0740581 | 34.1180317 | 12.61 | 19.20 | 15-20% | No |
| 6037901205 | 10466 | Los Angeles | 93536 | Lancaster | -118.2759944 | 34.6784036 | 12.61 | 19.18 | 15-20% | No |
| 6067008504 | 4320 | Sacramento | 95630 | Folsom | -121.1811222 | 38.6508815 | 12.60 | 19.17 | 15-20% | No |
| 6059021924 | 4192 | Orange | 92862 | Orange | -117.6955373 | 33.8098494 | 12.59 | 19.16 | 15-20% | No |
| 6061023800 | 3257 | Placer | 95648 | Lincoln | -121.2561132 | 38.876759 | 12.56 | 19.14 | 15-20% | No |
| 6113010509 | 3471 | Yolo | 95616 | Davis | -121.7510359 | 38.5645014 | 12.56 | 19.13 | 15-20% | No |
| 6079012900 | 5296 | San Luis Obispo | 93465 | Templeton | -120.557377 | 35.5048639 | 12.56 | 19.12 | 15-20% | No |
| 6075042700 | 5326 | San Francisco | 94121 | San Francisco | -122.4881473 | 37.7822651 | 12.56 | 19.11 | 15-20% | No |
| 6059110203 | 5393 | Orange | 90620 | Buena Park | -118.019392 | 33.8135237 | 12.55 | 19.09 | 15-20% | No |
| 6059099240 | 5183 | Orange | 92646 | Huntington Beach | -117.9582847 | 33.6425324 | 12.55 | 19.08 | 15-20% | No |
| 6059099246 | 3614 | Orange | 92646 | Huntington Beach | -117.9756484 | 33.6794766 | 12.55 | 19.07 | 15-20% | No |
| 6061020107 | 3510 | Placer | 96143 | Kings Beach | -120.0195644 | 39.2468106 | 12.54 | 19.06 | 15-20% | No |
| 6005000101 | 3907 | Amador | 95666 | Pioneer | -120.5707489 | 38.4649441 | 12.54 | 19.04 | 15-20% | No |
| 6023010902 | 4143 | Humboldt | 95526 | Bridgeville | -123.7971626 | 40.5020364 | 12.52 | 19.03 | 15-20% | No |
| 6059032011 | 1606 | Orange | 92676 | Silverado | -117.6126068 | 33.7525125 | 12.52 | 19.02 | 15-20% | No |
| 6075033100 | 3968 | San Francisco | 94132 | San Francisco | -122.4872238 | 37.7321973 | 12.52 | 19.01 | 15-20% | No |
| 6073006801 | 2503 | San Diego | 92107 | San Diego | -117.2292656 | 32.7547551 | 12.51 | 18.99 | 15-20% | No |
| 6097153806 | 3288 | Sonoma | 95492 | Windsor | -122.8020356 | 38.5525461 | 12.51 | 18.98 | 15-20% | No |
| 6085507903 | 4828 | Santa Clara | 95129 | San Jose | -122.0102043 | 37.3026196 | 12.50 | 18.97 | 15-20% | No |
| 6071010420 | 4103 | San Bernardino | 92252 | Joshua Tree | -116.2970602 | 34.1711567 | 12.50 | 18.96 | 15-20% | No |
| 6073015302 | 4075 | San Diego | 92020 | El Cajon | -116.9699985 | 32.7743373 | 12.50 | 18.94 | 15-20% | No |
| 6057000402 | 6926 | Nevada | 95946 | Penn Valley | -121.2138243 | 39.210354 | 12.49 | 18.93 | 15-20% | No |
| 6013343001 | 4806 | Contra Costa | 94596 | Walnut Creek | -122.0458632 | 37.8931242 | 12.49 | 18.92 | 15-20% | No |
| 6037910804 | 3295 | Los Angeles | 93510 | Acton | -118.1943718 | 34.5244096 | 12.49 | 18.91 | 15-20% | No |
| 6013345111 | 5099 | Contra Costa | 94583 | San Ramon | -121.9526849 | 37.7570354 | 12.48 | 18.89 | 15-20% | No |
| 6073018513 | 9081 | San Diego | 92056 | Oceanside | -117.3079977 | 33.2136656 | 12.47 | 18.88 | 15-20% | No |
| 6001450200 | 4067 | Alameda | 94568 | Dublin | -121.9154401 | 37.7224552 | 12.47 | 18.87 | 15-20% | No |
| 6001441522 | 4980 | Alameda | 94555 | Fremont | -122.0572528 | 37.5845579 | 12.47 | 18.85 | 15-20% | No |
| 6007001900 | 3373 | Butte | 95969 | Paradise | -121.5758491 | 39.7841664 | 12.44 | 18.84 | 15-20% | No |
| 6059063302 | 4165 | Orange | 92627 | Costa Mesa | -117.9132613 | 33.6313413 | 12.44 | 18.83 | 15-20% | No |
| 6037800410 | 3627 | Los Angeles | 90265 | Malibu | -118.736699 | 34.0544607 | 12.43 | 18.82 | 15-20% | No |
| 6111006700 | 3117 | Ventura | 91360 | Thousand Oaks | -118.8823319 | 34.1996069 | 12.43 | 18.80 | 15-20% | No |
| 6037621301 | 6769 | Los Angeles | 90277 | Redondo Beach | -118.3797513 | 33.8350669 | 12.43 | 18.79 | 15-20% | No |
| 6061022500 | 3879 | Placer | 95747 | Roseville | -121.3640005 | 38.7391442 | 12.43 | 18.78 | 15-20% | No |
| 6059021914 | 4218 | Orange | 92705 | Santa Ana | -117.8028407 | 33.780868 | 12.43 | 18.77 | 15-20% | No |

| | | | | | | | | | | |
|---|---|---|---|---|---|---|---|---|---|---|
| 6013333101 | 4091 | Contra Costa | 94521 | Concord | -121.9701205 | 37.9649061 | 11.59 | 16.43 | 15-20% | No |
| 6085509106 | 4171 | Santa Clara | 94086 | Sunnyvale | -122.0504683 | 37.378603 | 11.59 | 16.42 | 15-20% | No |
| 6061021203 | 6536 | Placer | 95650 | Loomis | -121.1999804 | 38.8271204 | 11.59 | 16.41 | 15-20% | No |
| 6073016613 | 1860 | San Diego | 92071 | Santee | -117.0043675 | 32.8456215 | 11.59 | 16.40 | 15-20% | No |
| 6061020200 | 6146 | Placer | 95631 | Foresthill | -120.5640417 | 39.0828051 | 11.58 | 16.38 | 15-20% | No |
| 6029005402 | 5094 | Kern | 93555 | Ridgecrest | -117.6877306 | 35.6298168 | 11.58 | 16.37 | 15-20% | No |
| 6067008204 | 4495 | Sacramento | 95662 | Orangevale | -121.2349624 | 38.6713445 | 11.58 | 16.36 | 15-20% | No |
| 6059062648 | 2774 | Orange | 92637 | Laguna Woods | -117.7378821 | 33.6110236 | 11.57 | 16.35 | 15-20% | No |
| 6061021130 | 2641 | Placer | 95765 | Rocklin | -121.2687886 | 38.8098522 | 11.57 | 16.33 | 15-20% | No |
| 6051000101 | 3463 | Mono | 93514 | Bishop | -118.5813604 | 37.6888353 | 11.57 | 16.32 | 15-20% | No |
| 6097151310 | 6143 | Sonoma | 94928 | Rohnert Park | -122.6825544 | 38.3392841 | 11.56 | 16.31 | 15-20% | No |
| 6059032003 | 4852 | Orange | 92691 | Mission Viejo | -117.6672345 | 33.6050678 | 11.56 | 16.29 | 15-20% | No |
| 6037141700 | 3091 | Los Angeles | 90210 | Beverly Hills | -118.4376439 | 34.1379878 | 11.54 | 16.28 | 15-20% | No |
| 6017030505 | 2704 | El Dorado | 96150 | South Lake Tahoe | -119.9583769 | 38.8426463 | 11.53 | 16.27 | 15-20% | No |
| 6017031302 | 4701 | El Dorado | 95726 | Pollock Pines | -120.5987224 | 38.7682537 | 11.53 | 16.26 | 15-20% | No |
| 6073016807 | 7135 | San Diego | 92040 | Lakeside | -116.9197122 | 32.8364013 | 11.53 | 16.24 | 15-20% | No |
| 6065043244 | 7220 | Riverside | 92563 | Murrieta | -117.1229937 | 33.5472159 | 11.52 | 16.23 | 15-20% | No |
| 6059021916 | 3529 | Orange | 92807 | Anaheim | -117.7923658 | 33.8407667 | 11.52 | 16.22 | 15-20% | No |
| 6073019803 | 4465 | San Diego | 92010 | Carlsbad | -117.3081967 | 33.175329 | 11.52 | 16.21 | 15-20% | No |
| 6073017701 | 5275 | San Diego | 92024 | Encinitas | -117.3060959 | 33.0772389 | 11.52 | 16.19 | 15-20% | No |
| 6037189400 | 3448 | Los Angeles | 90068 | Los Angeles | -118.3211428 | 34.1200812 | 11.52 | 16.18 | 15-20% | No |
| 6013356002 | 5375 | Contra Costa | 94553 | Martinez | -122.1903986 | 37.9544588 | 11.51 | 16.17 | 15-20% | No |
| 6065044520 | 1704 | Riverside | 92276 | Thousand Palms | -116.3795881 | 33.8530222 | 11.50 | 16.16 | 15-20% | No |
| 6059099235 | 4619 | Orange | 92646 | Huntington Beach | -117.9845181 | 33.6939742 | 11.50 | 16.14 | 15-20% | No |
| 6081608502 | 2637 | San Mateo | 94403 | San Mateo | -122.2825353 | 37.5317305 | 11.49 | 16.13 | 15-20% | No |
| 6001421900 | 3632 | Alameda | 94702 | Berkeley | -122.2896443 | 37.8794799 | 11.48 | 16.12 | 15-20% | No |
| 6017031402 | 5896 | El Dorado | 95684 | Somerset | -120.5343814 | 38.6035985 | 11.48 | 16.11 | 15-20% | No |
| 6073008513 | 2691 | San Diego | 92111 | San Diego | -117.1810994 | 32.8034143 | 11.46 | 16.09 | 15-20% | No |
| 6073008348 | 5259 | San Diego | 92126 | San Diego | -117.1629598 | 32.9147375 | 11.46 | 16.08 | 15-20% | No |
| 6111005907 | 3635 | Ventura | 91361 | Westlake Village | -118.8464045 | 34.1376331 | 11.46 | 16.07 | 15-20% | No |
| 6059099416 | 4444 | Orange | 92649 | Huntington Beach | -118.0458577 | 33.7188921 | 11.46 | 16.05 | 15-20% | No |
| 6033001100 | 3865 | Lake | 95451 | Kelseyville | -122.7736029 | 38.8709539 | 11.46 | 16.04 | 15-20% | No |
| 6037920018 | 2277 | Los Angeles | 91350 | Santa Clarita | -118.5295463 | 34.4558936 | 11.46 | 16.03 | 15-20% | No |
| 6037463800 | 3869 | Los Angeles | 91105 | Pasadena | -118.1745514 | 34.1341118 | 11.45 | 16.02 | 15-20% | No |
| 6075032802 | 4047 | San Francisco | 94122 | San Francisco | -122.4812305 | 37.7530955 | 11.44 | 16.00 | 15-20% | No |
| 6017031404 | 2407 | El Dorado | 95667 | Placerville | -120.7055174 | 38.6909824 | 11.44 | 15.99 | 15-20% | No |
| 6073020304 | 6061 | San Diego | 92026 | Escondido | -117.1308356 | 33.1749098 | 11.43 | 15.98 | 15-20% | No |
| 6113011203 | 2561 | Yolo | 95695 | Woodland | -121.7934889 | 38.659519 | 11.42 | 15.97 | 15-20% | No |
| 6071000813 | 3449 | San Bernardino | 91784 | Upland | -117.6779015 | 34.1406476 | 11.42 | 15.95 | 15-20% | No |
| 6013355111 | 6343 | Contra Costa | 94531 | Antioch | -121.7753475 | 37.978244 | 11.42 | 15.94 | 15-20% | No |
| 6097152906 | 5234 | Sonoma | 95401 | Santa Rosa | -122.7983695 | 38.472322 | 11.41 | 15.93 | 15-20% | No |
| 6089011703 | 3282 | Shasta | 96019 | Shasta Lake | -122.3698759 | 40.6925227 | 11.40 | 15.92 | 15-20% | No |
| 6013388000 | 2576 | Contra Costa | 94530 | El Cerrito | -122.3022455 | 37.9089588 | 11.37 | 15.90 | 15-20% | No |
| 6085506606 | 4453 | Santa Clara | 95008 | Campbell | -121.9687764 | 37.2902052 | 11.37 | 15.89 | 15-20% | No |
| 6083001903 | 5764 | Santa Barbara | 93463 | Solvang | -120.1378745 | 34.6243989 | 11.36 | 15.88 | 15-20% | No |
| 6065045117 | 3969 | Riverside | 92260 | Palm Desert | -116.3757329 | 33.7163278 | 11.35 | 15.87 | 15-20% | No |
| 6003010000 | 1175 | Alpine | 96120 | Markleeville | -119.7989986 | 38.6176096 | 11.34 | 15.85 | 15-20% | No |
| 6083000600 | 4629 | Santa Barbara | 93103 | Santa Barbara | -119.6891123 | 34.4372104 | 11.34 | 15.84 | 15-20% | No |
| 6081610000 | 4531 | San Mateo | 94062 | Redwood City | -122.2412328 | 37.4844567 | 11.34 | 15.83 | 15-20% | No |
| 6059032047 | 3652 | Orange | 92691 | Mission Viejo | -117.6420514 | 33.6575536 | 11.34 | 15.82 | 15-20% | No |
| 6075015700 | 7832 | San Francisco | 94118 | San Francisco | -122.4480069 | 37.7789154 | 11.34 | 15.80 | 15-20% | No |
| 6085508507 | 3066 | Santa Clara | 95051 | Santa Clara | -121.9984125 | 37.3562527 | 11.33 | 15.79 | 15-20% | No |
| 6037573601 | 6114 | Los Angeles | 90808 | Long Beach | -118.1316155 | 33.8262896 | 11.33 | 15.78 | 15-20% | No |
| 6059063500 | 5775 | Orange | 92663 | Newport Beach | -117.9402584 | 33.6201747 | 11.33 | 15.76 | 15-20% | No |
| 6075020700 | 5171 | San Francisco | 94110 | San Francisco | -122.4235588 | 37.759168 | 11.31 | 15.75 | 15-20% | No |
| 6085508404 | 6023 | Santa Clara | 94087 | Sunnyvale | -122.0416426 | 37.3646098 | 11.31 | 15.74 | 15-20% | No |
| 6075013400 | 3599 | San Francisco | 94115 | San Francisco | -122.440799 | 37.789849 | 11.29 | 15.73 | 15-20% | No |
| 6093000800 | 3412 | Siskiyou | 96031 | Forks of Salmon | -123.0110405 | 41.327554 | 11.28 | 15.71 | 15-20% | No |
| 6073001900 | 2939 | San Diego | 92116 | San Diego | -117.1196457 | 32.7696657 | 11.27 | 15.70 | 15-20% | No |
| 6097153703 | 3490 | Sonoma | 95446 | Guerneville | -123.0055208 | 38.4759155 | 11.27 | 15.69 | 15-20% | No |
| 6061021109 | 5012 | Placer | 95677 | Rocklin | -121.2189633 | 38.78155 | 11.26 | 15.68 | 15-20% | No |
| 6073013601 | 5053 | San Diego | 91941 | La Mesa | -116.9758103 | 32.7537922 | 11.25 | 15.66 | 15-20% | No |
| 6073009103 | 3679 | San Diego | 92110 | San Diego | -117.1956419 | 32.7878017 | 11.25 | 15.65 | 15-20% | No |
| 6059099244 | 3730 | Orange | 92646 | Huntington Beach | -117.9754563 | 33.664956 | 11.25 | 15.64 | 15-20% | No |
| 6085506701 | 3954 | Santa Clara | 95008 | Campbell | -121.9793326 | 37.2706408 | 11.24 | 15.63 | 15-20% | No |
| 6079010503 | 5339 | San Luis Obispo | 93442 | Morro Bay | -120.8585435 | 35.3950312 | 11.23 | 15.61 | 15-20% | No |
| 6085507807 | 3219 | Santa Clara | 95014 | Cupertino | -122.0405535 | 37.3124131 | 11.23 | 15.60 | 15-20% | No |
| 6085506101 | 4615 | Santa Clara | 95051 | Santa Clara | -121.984583 | 37.3341541 | 11.23 | 15.59 | 15-20% | No |
| 6055200706 | 3283 | Napa | 94558 | Napa | -122.3302221 | 38.3307724 | 11.23 | 15.58 | 15-20% | No |
| 6073020024 | 4175 | San Diego | 92069 | San Marcos | -117.124725 | 33.1471367 | 11.22 | 15.56 | 15-20% | No |
| 6075035202 | 4322 | San Francisco | 94122 | San Francisco | -122.5061466 | 37.7613974 | 11.22 | 15.55 | 15-20% | No |
| 6073018802 | 8122 | San Diego | 92028 | Fallbrook | -117.1998988 | 33.3337164 | 11.22 | 15.54 | 15-20% | No |
| 6055201700 | 5373 | Napa | 94508 | Angwin | -122.4283032 | 38.5549587 | 11.21 | 15.53 | 15-20% | No |
| 6059021921 | 4496 | Orange | 92808 | Anaheim | -117.7543976 | 33.8549585 | 11.20 | 15.51 | 15-20% | No |
| 6075047702 | 3824 | San Francisco | 94121 | San Francisco | -122.4837889 | 37.7744602 | 11.20 | 15.50 | 15-20% | No |
| 6037194300 | 3029 | Los Angeles | 90069 | West Hollywood | -118.3875164 | 34.1016653 | 11.20 | 15.49 | 15-20% | No |
| 6059052526 | 4355 | Orange | 92604 | Irvine | -117.7840842 | 33.7011607 | 11.20 | 15.47 | 15-20% | No |
| 6085512031 | 4406 | Santa Clara | 95123 | San Jose | -121.8102526 | 37.231546 | 11.16 | 15.46 | 15-20% | No |
| 6037137302 | 4338 | Los Angeles | 91367 | Woodland Hills | -118.6541956 | 34.177348 | 11.16 | 15.45 | 15-20% | No |
| 6041106002 | 5625 | Marin | 94903 | San Rafael | -122.5028113 | 38.0055686 | 11.16 | 15.44 | 15-20% | No |
| 6037620800 | 7575 | Los Angeles | 90266 | Manhattan Beach | -118.3876372 | 33.8802482 | 11.16 | 15.42 | 15-20% | No |
| 6065043265 | 6142 | Riverside | 92592 | Temecula | -117.0839947 | 33.4917233 | 11.16 | 15.41 | 15-20% | No |
| 6067008125 | 5265 | Sacramento | 95610 | Citrus Heights | -121.2551672 | 38.7059233 | 11.15 | 15.40 | 15-20% | No |
| 6083000200 | 4299 | Santa Barbara | 93105 | Santa Barbara | -119.7377491 | 34.4348903 | 11.12 | 15.39 | 15-20% | No |
| 6037620522 | 4632 | Los Angeles | 90278 | Redondo Beach | -118.3749726 | 33.8764601 | 11.11 | 15.37 | 15-20% | No |
| 6045011400 | 4469 | Mendocino | 95482 | Ukiah | -123.2304257 | 39.1424071 | 11.09 | 15.36 | 15-20% | No |
| 6037650501 | 3063 | Los Angeles | 90503 | Torrance | -118.3586819 | 33.8537952 | 11.09 | 15.35 | 15-20% | No |
| 6073013411 | 4999 | San Diego | 91902 | Bonita | -117.0130151 | 32.6602275 | 11.09 | 15.34 | 15-20% | No |
| 6085508304 | 7957 | Santa Clara | 94087 | Sunnyvale | -122.0369674 | 37.3448183 | 11.08 | 15.32 | 15-20% | No |
| 6013355110 | 4197 | Contra Costa | 94531 | Antioch | -121.7692731 | 37.967884 | 11.08 | 15.31 | 15-20% | No |
| 6081611000 | 5707 | San Mateo | 94061 | Redwood City | -122.2335642 | 37.4662884 | 11.08 | 15.30 | 15-20% | No |
| 6073009202 | 4428 | San Diego | 92123 | San Diego | -117.1428842 | 32.7860364 | 11.07 | 15.29 | 15-20% | No |
| 6067004011 | 3086 | Sacramento | 95831 | Sacramento | -121.5288152 | 38.4819076 | 11.06 | 15.27 | 15-20% | No |
| 6085502500 | 6187 | Santa Clara | 95125 | San Jose | -121.89284 | 37.2931927 | 11.05 | 15.26 | 15-20% | No |
| 6059032035 | 2373 | Orange | 92692 | Mission Viejo | -117.6404935 | 33.6324425 | 11.05 | 15.25 | 15-20% | No |
| 6065043257 | 7034 | Riverside | 92592 | Temecula | -116.9898216 | 33.4497328 | 11.04 | 15.24 | 15-20% | No |
| 6037800324 | 6664 | Los Angeles | 91301 | Agoura Hills | -118.7795834 | 34.1504051 | 11.04 | 15.22 | 15-20% | No |
| 6037570002 | 2699 | Los Angeles | 90712 | Lakewood | -118.1294697 | 33.8646532 | 11.03 | 15.21 | 15-20% | No |
| 6013307101 | 4166 | Contra Costa | 94509 | Antioch | -121.8155925 | 37.9865794 | 11.03 | 15.20 | 15-20% | No |
| 6059062636 | 3690 | Orange | 92656 | Aliso Viejo | -117.7170668 | 33.5832392 | 11.01 | 15.18 | 15-20% | No |
| 6073017034 | 4747 | San Diego | 92129 | San Diego | -117.0908369 | 32.9901496 | 11.00 | 15.17 | 15-20% | No |
| 6073021205 | 6801 | San Diego | 91901 | Alpine | -116.7811501 | 32.8287974 | 11.00 | 15.16 | 15-20% | No |
| 6037800325 | 3407 | Los Angeles | 91361 | Westlake Village | -118.8174173 | 34.1447221 | 10.97 | 15.15 | 15-20% | No |
| 6007000401 | 1771 | Butte | 95973 | Chico | -121.894685 | 39.7660786 | 10.97 | 15.13 | 15-20% | No |
| 6073017037 | 5880 | San Diego | 92129 | San Diego | -117.1190243 | 32.9493661 | 10.96 | 15.12 | 15-20% | No |
| 6089011803 | 2923 | Shasta | 96003 | Redding | -122.2860952 | 40.7399422 | 10.96 | 15.11 | 15-20% | No |
| 6013338102 | 3601 | Contra Costa | 94518 | Concord | -122.0423399 | 37.9413456 | 10.96 | 15.10 | 15-20% | No |
| 6037577400 | 3253 | Los Angeles | 90803 | Long Beach | -118.1351139 | 33.7629063 | 10.95 | 15.08 | 15-20% | No |
| 6079011102 | 5127 | San Luis Obispo | 93401 | San Luis Obispo | -120.657254 | 35.2687981 | 10.95 | 15.07 | 15-20% | No |
| 6075015600 | 2728 | San Francisco | 94118 | San Francisco | -122.4564254 | 37.7782427 | 10.94 | 15.06 | 15-20% | No |
| 6001443322 | 2985 | Alameda | 94539 | Fremont | -121.9198352 | 37.482983 | 10.94 | 15.05 | 15-20% | No |
| 6075010400 | 4545 | San Francisco | 94133 | San Francisco | -122.4075581 | 37.8022725 | 10.94 | 15.03 | 15-20% | No |
| 6001400400 | 3703 | Alameda | 94609 | Oakland | -122.2574628 | 37.8482107 | 10.91 | 15.02 | 15-20% | No |
| 6097150202 | 5103 | Sonoma | 95476 | Sonoma | -122.4393662 | 38.318835 | 10.91 | 15.01 | 15-20% | No |
| 6073017014 | 2416 | San Diego | 92128 | San Diego | -117.0682214 | 33.0159951 | 10.91 | 15.00 | 10-15% | No |
| 6017031301 | 3408 | El Dorado | 95709 | Camino | -120.6900981 | 38.7487648 | 10.91 | 14.98 | 10-15% | No |
| 6071002021 | 5201 | San Bernardino | 91739 | Rancho Cucamonga | -117.556851 | 34.152255 | 10.89 | 14.97 | 10-15% | No |
| 6073008345 | 3254 | San Diego | 92122 | San Diego | -117.1916155 | 32.8501753 | 10.88 | 14.96 | 10-15% | No |
| 6073017039 | 6921 | San Diego | 92128 | San Diego | -117.0877455 | 32.9526715 | 10.88 | 14.95 | 10-15% | No |
| 6097151700 | 6978 | Sonoma | 95405 | Santa Rosa | -122.660775 | 38.4493765 | 10.88 | 14.93 | 10-15% | No |
| 6073013905 | 3676 | San Diego | 91977 | Spring Valley | -116.9900814 | 32.7222385 | 10.86 | 14.92 | 10-15% | No |
| 6055201300 | 2933 | Napa | 94599 | Yountville | -122.3669283 | 38.3955272 | 10.85 | 14.91 | 10-15% | No |
| 6001423601 | 2642 | Alameda | 94705 | Berkeley | -122.2587175 | 37.8588968 | 10.81 | 14.89 | 10-15% | No |
| 6059075814 | 3327 | Orange | 92867 | Orange | -117.8056228 | 33.831656 | 10.81 | 14.88 | 10-15% | No |
| 6085509302 | 2978 | Santa Clara | 94043 | Mountain View | -122.1006423 | 37.409233 | 10.80 | 14.87 | 10-15% | No |
| 6037920303 | 1446 | Los Angeles | 91311 | Chatsworth | -118.6106718 | 34.3160081 | 10.79 | 14.86 | 10-15% | No |
| 6059099404 | 4505 | Orange | 92647 | Huntington Beach | -118.0193307 | 33.7074614 | 10.79 | 14.84 | 10-15% | No |
| 6073017603 | 2476 | San Diego | 92024 | Encinitas | -117.2904158 | 33.0576984 | 10.79 | 14.83 | 10-15% | No |
| 6075032801 | 4238 | San Francisco | 94116 | San Francisco | -122.4804177 | 37.7460215 | 10.78 | 14.82 | 10-15% | No |
| 6073017009 | 4024 | San Diego | 92064 | Poway | -117.0283696 | 32.9677095 | 10.78 | 14.81 | 10-15% | No |
| 6067007904 | 4797 | Sacramento | 95628 | Fair Oaks | -121.3002417 | 38.656309 | 10.78 | 14.79 | 10-15% | No |
| 6095253201 | 4713 | Solano | 95688 | Vacaville | -122.0115118 | 38.3703216 | 10.78 | 14.78 | 10-15% | No |
| 6059021816 | 4833 | Orange | 92886 | Yorba Linda | -117.7948035 | 33.8780654 | 10.78 | 14.77 | 10-15% | No |
| 6073013605 | 5622 | San Diego | 91941 | La Mesa | -116.9481393 | 32.7589751 | 10.77 | 14.76 | 10-15% | No |
| 6073009502 | 3659 | San Diego | 92124 | San Diego | -117.1102052 | 32.8336423 | 10.77 | 14.74 | 10-15% | No |
| 6073016612 | 6143 | San Diego | 92071 | Santee | -116.9941684 | 32.8723023 | 10.76 | 14.73 | 10-15% | No |
| 6067007432 | 5040 | Sacramento | 95843 | Antelope | -121.3548798 | 38.7226029 | 10.75 | 14.72 | 10-15% | No |
| 6081605000 | 7603 | San Mateo | 94010 | Burlingame | -122.3898031 | 37.5815575 | 10.74 | 14.71 | 10-15% | No |
| 6073017702 | 2777 | San Diego | 92024 | Encinitas | -117.2996671 | 33.0572295 | 10.73 | 14.69 | 10-15% | No |
| 6073008364 | 4992 | San Diego | 92122 | San Diego | -117.2274041 | 32.8599014 | 10.73 | 14.68 | 10-15% | No |
| 6041109001 | 3853 | Marin | 94901 | San Rafael | -122.5305318 | 37.9815305 | 10.73 | 14.67 | 10-15% | No |
| 6087122100 | 3267 | Santa Cruz | 95003 | Aptos | -121.913426 | 36.9717451 | 10.73 | 14.66 | 10-15% | No |
| 6067007104 | 7689 | Sacramento | 95835 | Sacramento | -121.5182326 | 38.6726382 | 10.72 | 14.64 | 10-15% | No |
| 6073016809 | 5486 | San Diego | 92021 | El Cajon | -116.8941897 | 32.8295319 | 10.69 | 14.63 | 10-15% | No |
| 6089012601 | 5195 | Shasta | 96065 | Montgomery Creek | -121.994176 | 40.8731168 | 10.69 | 14.62 | 10-15% | No |
| 6087122201 | 6269 | Santa Cruz | 95003 | Aptos | -121.8771977 | 36.9736247 | 10.68 | 14.60 | 10-15% | No |
| 6073017043 | 5535 | San Diego | 92131 | San Diego | -117.1057659 | 32.9282044 | 10.67 | 14.59 | 10-15% | No |
| 6001430101 | 6523 | Alameda | 94552 | Castro Valley | -122.0152514 | 37.7272587 | 10.67 | 14.58 | 10-15% | No |
| 6075035201 | 5300 | San Francisco | 94122 | San Francisco | -122.5104339 | 37.7566148 | 10.67 | 14.57 | 10-15% | No |
| 6037430600 | 4505 | Los Angeles | 91006 | Arcadia | -118.0470542 | 34.1553775 | 10.66 | 14.55 | 10-15% | No |
| 6075013500 | 2556 | San Francisco | 94115 | San Francisco | -122.4325551 | 37.7908976 | 10.66 | 14.54 | 10-15% | No |
| 6037574100 | 5098 | Los Angeles | 90808 | Long Beach | -118.122827 | 33.8138403 | 10.66 | 14.53 | 10-15% | No |
| 6065043267 | 6705 | Riverside | 92591 | Temecula | -117.1047166 | 33.5207723 | 10.65 | 14.52 | 10-15% | No |
| 6037920119 | 1896 | Los Angeles | 91384 | Castaic | -118.6355485 | 34.4635721 | 10.65 | 14.50 | 10-15% | No |
| 6079012502 | 4985 | San Luis Obispo | 93422 | Atascadero | -120.6548827 | 35.4934879 | 10.63 | 14.49 | 10-15% | No |
| 6037271500 | 2937 | Los Angeles | 90066 | Los Angeles | -118.4382414 | 34.0166822 | 10.62 | 14.48 | 10-15% | No |
| 6015000104 | 1881 | Del Norte | 95531 | Crescent City | -124.1930607 | 41.7755135 | 10.61 | 14.47 | 10-15% | No |
| 6075026002 | 3544 | San Francisco | 94112 | San Francisco | -122.4262823 | 37.7261197 | 10.61 | 14.45 | 10-15% | No |
| 6001451703 | 3859 | Alameda | 94550 | Livermore | -121.8009991 | 37.6672948 | 10.60 | 14.44 | 10-15% | No |
| 6073017813 | 4106 | San Diego | 92011 | Carlsbad | -117.3269889 | 33.1220083 | 10.58 | 14.43 | 10-15% | No |
| 6061022800 | 4320 | Placer | 95678 | Roseville | -121.2771141 | 38.789047 | 10.55 | 14.42 | 10-15% | No |
| 6065044929 | 3908 | Riverside | 92260 | Palm Desert | -116.382169 | 33.7488598 | 10.55 | 14.40 | 10-15% | No |
| 6017030810 | 3437 | El Dorado | 95682 | Shingle Springs | -120.9937862 | 38.6862022 | 10.55 | 14.39 | 10-15% | No |
| 6071000816 | 3906 | San Bernardino | 91784 | Upland | -117.6607959 | 34.1280325 | 10.55 | 14.38 | 10-15% | No |
| 6037300702 | 5604 | Los Angeles | 91207 | Glendale | -118.2629218 | 34.1823785 | 10.54 | 14.36 | 10-15% | No |
| 6059075808 | 3404 | Orange | 92869 | Orange | -117.8204295 | 33.7769301 | 10.54 | 14.35 | 10-15% | No |
| 6073008354 | 5972 | San Diego | 92129 | San Diego | -117.1186741 | 32.9332185 | 10.54 | 14.34 | 10-15% | No |
| 6087122400 | 7167 | Santa Cruz | 95076 | Watsonville | -121.7979629 | 37.001101 | 10.53 | 14.33 | 10-15% | No |
| 6081606800 | 3234 | San Mateo | 94402 | San Mateo | -122.3377716 | 37.5294551 | 10.53 | 14.31 | 10-15% | No |
| 6075012700 | 3492 | San Francisco | 94123 | San Francisco | -122.4447181 | 37.8049898 | 10.53 | 14.30 | 10-15% | No |
| 6059052506 | 2490 | Orange | 92604 | Irvine | -117.7807058 | 33.6856826 | 10.53 | 14.29 | 10-15% | No |
| 6059021824 | 2678 | Orange | 92886 | Yorba Linda | -117.7692769 | 33.8986741 | 10.52 | 14.28 | 10-15% | No |
| 6067004008 | 3596 | Sacramento | 95831 | Sacramento | -121.5470459 | 38.489903 | 10.51 | 14.26 | 10-15% | No |
| 6073001000 | 4733 | San Diego | 92116 | San Diego | -117.1417318 | 32.7603326 | 10.51 | 14.25 | 10-15% | No |
| 6081613502 | 5975 | San Mateo | 94019 | Half Moon Bay | -122.4708033 | 37.521253 | 10.51 | 14.24 | 10-15% | No |
| 6111007300 | 1930 | Ventura | 91320 | Newbury Park | -118.986805 | 34.1023158 | 10.50 | 14.23 | 10-15% | No |
| 6085503322 | 4173 | Santa Clara | 95148 | San Jose | -121.7977322 | 37.3413456 | 10.49 | 14.21 | 10-15% | No |
| 6037800331 | 766 | Los Angeles | 91362 | Thousand Oaks | -118.7998264 | 34.1572716 | 10.49 | 14.20 | 10-15% | No |
| 6111007202 | 4313 | Ventura | 91362 | Thousand Oaks | -118.8320102 | 34.1843442 | 10.49 | 14.19 | 10-15% | No |
| 6059099511 | 3182 | Orange | 90740 | Seal Beach | -118.1069698 | 33.7393938 | 10.48 | 14.18 | 10-15% | No |
| 6065044918 | 3030 | Riverside | 92270 | Rancho Mirage | -116.4015518 | 33.7631302 | 10.47 | 14.16 | 10-15% | No |
| 6019006405 | 4795 | Fresno | 93619 | Clovis | -119.5618119 | 37.004659 | 10.47 | 14.15 | 10-15% | No |
| 6037480201 | 3907 | Los Angeles | 91775 | San Gabriel | -118.1107586 | 34.1081475 | 10.47 | 14.14 | 10-15% | No |
| 6037480500 | 5485 | Los Angeles | 91030 | South Pasadena | -118.1449225 | 34.108241 | 10.46 | 14.13 | 10-15% | No |
| 6041104101 | 7819 | Marin | 94947 | Novato | -122.5643084 | 38.0792992 | 10.45 | 14.11 | 10-15% | No |
| 6059062641 | 4249 | Orange | 92637 | Laguna Woods | -117.7260302 | 33.601944 | 10.45 | 14.10 | 10-15% | No |
| 6067009637 | 6003 | Sacramento | 95757 | Elk Grove | -121.4250605 | 38.3868483 | 10.43 | 14.09 | 10-15% | No |
| 6083002913 | 3596 | Santa Barbara | 93111 | Santa Barbara | -119.8068138 | 34.4465699 | 10.43 | 14.07 | 10-15% | No |
| 6081603000 | 4143 | San Mateo | 94044 | Pacifica | -122.4859426 | 37.6364758 | 10.43 | 14.06 | 10-15% | No |
| 6037194102 | 3458 | Los Angeles | 90046 | Los Angeles | -118.3650891 | 34.116659 | 10.43 | 14.05 | 10-15% | No |
| 6023000600 | 4866 | Humboldt | 95501 | Eureka | -124.1501286 | 40.7886073 | 10.42 | 14.04 | 10-15% | No |
| 6085507205 | 4475 | Santa Clara | 95032 | Los Gatos | -121.9811671 | 37.2575105 | 10.42 | 14.02 | 10-15% | No |
| 6023010502 | 5281 | Humboldt | 95519 | McKinleyville | -124.0533616 | 40.9331482 | 10.41 | 14.01 | 10-15% | No |
| 6073019203 | 2866 | San Diego | 92084 | Vista | -117.2360535 | 33.237727 | 10.40 | 14.00 | 10-15% | No |
| 6067007102 | 7195 | Sacramento | 95835 | Sacramento | -121.532096 | 38.6780725 | 10.40 | 13.99 | 10-15% | No |
| 6071010402 | 8442 | San Bernardino | 92278 | Twentynine Palms | -116.1378978 | 34.4587143 | 10.40 | 13.97 | 10-15% | No |
| 6037701304 | 6374 | Los Angeles | 90402 | Santa Monica | -118.5076229 | 34.0293136 | 10.40 | 13.96 | 10-15% | No |
| 6081613600 | 6018 | San Mateo | 94038 | Moss Beach | -122.4994673 | 37.5417779 | 10.39 | 13.95 | 10-15% | No |
| 6111000901 | 2541 | Ventura | 93023 | Ojai | -119.2618887 | 34.4587926 | 10.39 | 13.94 | 10-15% | No |
| 6059052522 | 4123 | Orange | 92614 | Irvine | -117.8217375 | 33.6802504 | 10.38 | 13.92 | 10-15% | No |
| 6015000101 | 3939 | Del Norte | 95531 | Crescent City | -124.204051 | 41.7443155 | 10.38 | 13.91 | 10-15% | No |
| 6057000300 | 2353 | Nevada | 95949 | Grass Valley | -121.1052406 | 39.1744248 | 10.37 | 13.90 | 10-15% | No |
| 6075032901 | 5021 | San Francisco | 94116 | San Francisco | -122.4901861 | 37.7461534 | 10.37 | 13.89 | 10-15% | No |
| 6081608100 | 3523 | San Mateo | 94404 | San Mateo | -122.2630195 | 37.5606971 | 10.35 | 13.87 | 10-15% | No |
| 6085502702 | 8042 | Santa Clara | 95124 | San Jose | -121.9426217 | 37.2581371 | 10.33 | 13.86 | 10-15% | No |
| 6059032053 | 7976 | Orange | 92688 | Rancho Santa Margar | -117.6187322 | 33.617141 | 10.32 | 13.85 | 10-15% | No |
| 6073013417 | 2087 | San Diego | 91913 | Chula Vista | -116.9844864 | 32.6590401 | 10.32 | 13.84 | 10-15% | No |
| 6075047901 | 6400 | San Francisco | 94121 | San Francisco | -122.5098633 | 37.7824907 | 10.32 | 13.82 | 10-15% | No |
| 6073007501 | 4040 | San Diego | 92107 | San Diego | -117.243159 | 32.751974 | 10.30 | 13.81 | 10-15% | No |
| 6085508003 | 2222 | Santa Clara | 95014 | Cupertino | -122.0102662 | 37.3171027 | 10.28 | 13.80 | 10-15% | No |
| 6063000400 | 2785 | Plumas | 95934 | Crescent Mills | -120.9109355 | 40.0916592 | 10.27 | 13.78 | 10-15% | No |
| 6037573800 | 4284 | Los Angeles | 90808 | Long Beach | -118.0984125 | 33.8242122 | 10.27 | 13.77 | 10-15% | No |
| 6037920109 | 4493 | Los Angeles | 91354 | Valencia | -118.5520012 | 34.4538482 | 10.26 | 13.76 | 10-15% | No |
| 6019006404 | 4909 | Fresno | 93657 | Sanger | -119.3805297 | 36.9057665 | 10.25 | 13.75 | 10-15% | No |
| 6029003810 | 2578 | Kern | 93312 | Bakersfield | -119.1367221 | 35.3762338 | 10.24 | 13.73 | 10-15% | No |
| 6041119201 | 3288 | Marin | 94904 | Greenbrae | -122.5282641 | 37.9456796 | 10.23 | 13.72 | 10-15% | No |
| 6113011002 | 3093 | Yolo | 95695 | Woodland | -121.7872092 | 38.6661851 | 10.22 | 13.71 | 10-15% | No |
| 6113010704 | 2267 | Yolo | 95616 | Davis | -121.7555757 | 38.5536229 | 10.20 | 13.70 | 10-15% | No |
| 6061020715 | 3059 | Placer | 95661 | Roseville | -121.2543801 | 38.7237694 | 10.19 | 13.68 | 10-15% | No |
| 6079011503 | 3624 | San Luis Obispo | 93401 | San Luis Obispo | -120.620955 | 35.2430451 | 10.19 | 13.67 | 10-15% | No |
| 6067008210 | 5472 | Sacramento | 95630 | Folsom | -121.173807 | 38.7028284 | 10.19 | 13.66 | 10-15% | No |

| | | | | | | | | |
|---|---|---|---|---|---|---|---|---|
| 6097151203 | 5130 | Sonoma | 94931 | Cotati | -122.6934004 | 38.3222713 | 10.16 | 13.65 |
| 6037135203 | 7055 | Los Angeles | 91307 | West Hills | -118.6570809 | 34.1918593 | 10.16 | 13.63 |
| 6067004009 | 5129 | Sacramento | 95831 | Sacramento | -121.5338651 | 38.4908393 | 10.15 | 13.62 |
| 6097152502 | 3603 | Sonoma | 95409 | Santa Rosa | -122.6641385 | 38.4784138 | 10.15 | 13.61 |
| 6065049700 | 9511 | Riverside | 92562 | Murrieta | -117.2443765 | 33.5246081 | 10.13 | 13.60 |
| 6075047600 | 5137 | San Francisco | 94118 | San Francisco | -122.475543 | 37.7767698 | 10.11 | 13.58 |
| 6049000400 | 1265 | Modoc | 96104 | Cedarville | -120.0968999 | 41.5761782 | 10.11 | 13.57 |
| 6059042328 | 2524 | Orange | 92653 | Laguna Hills | -117.6841854 | 33.5831592 | 10.11 | 13.56 |
| 6083002007 | 9554 | Santa Barbara | 93455 | Santa Maria | -120.4257095 | 34.9079217 | 10.10 | 13.55 |
| 6057000200 | 2700 | Nevada | 95949 | Grass Valley | -121.1947188 | 39.1006443 | 10.09 | 13.53 |
| 6075013102 | 2625 | San Francisco | 94109 | San Francisco | -122.4274293 | 37.7926193 | 10.09 | 13.52 |
| 6059042320 | 5665 | Orange | 92656 | Aliso Viejo | -117.7106408 | 33.5707126 | 10.09 | 13.51 |
| 6017030603 | 3566 | El Dorado | 51 | Eldorado NTL Forest | -120.4220948 | 38.8821468 | 10.09 | 13.49 |
| 6039000106 | 5021 | Madera | 93614 | Coarsegold | -119.7721217 | 37.1853582 | 10.08 | 13.48 |
| 6081602900 | 3846 | San Mateo | 94044 | Pacifica | -122.4918058 | 37.6532841 | 10.08 | 13.47 |
| 6023011500 | 4409 | Humboldt | 95542 | Garberville | -123.9644534 | 40.1577117 | 10.08 | 13.46 |
| 6037670416 | 4139 | Los Angeles | 90275 | Rancho Palos Verdes | -118.4075895 | 33.7558674 | 10.07 | 13.44 |
| 6097153501 | 4319 | Sonoma | 95472 | Sebastopol | -122.794423 | 38.3374068 | 10.07 | 13.43 |
| 6075013101 | 3811 | San Francisco | 94109 | San Francisco | -122.4247493 | 37.7937758 | 10.06 | 13.42 |
| 6037910809 | 2235 | Los Angeles | 91387 | Canyon Country | -118.4042026 | 34.4087694 | 10.05 | 13.41 |
| 6001428301 | 6526 | Alameda | 94502 | Alameda | -122.2406697 | 37.7334484 | 10.05 | 13.39 |

| | | | | | | | | | | |
|---|---|---|---|---|---|---|---|---|---|---|
| 6085511302 | 4062 | Santa Clara | 94301 | Palo Alto | -122.1622059 | 37.4480602 | 8.98 | 10.86 | 10-15% | No |
| 6037264102 | 2873 | Los Angeles | 90049 | Los Angeles | -118.4693771 | 34.0595085 | 8.98 | 10.85 | 10-15% | No |
| 6001430300 | 3670 | Alameda | 94546 | Castro Valley | -122.0837445 | 37.7229094 | 8.97 | 10.83 | 10-15% | No |
| 6041101100 | 2569 | Marin | 94945 | Novato | -122.5352269 | 38.1289471 | 8.97 | 10.82 | 10-15% | No |
| 6073008353 | 5048 | San Diego | 92126 | San Diego | -117.133675 | 32.9328144 | 8.96 | 10.81 | 10-15% | No |
| 6001420200 | 2898 | Alameda | 94706 | Albany | -122.2974624 | 37.8944611 | 8.96 | 10.80 | 10-15% | No |
| 6037261200 | 4341 | Los Angeles | 90077 | Los Angeles | -118.4418058 | 34.1132765 | 8.95 | 10.78 | 10-15% | No |
| 6081605100 | 3014 | San Mateo | 94010 | Burlingame | -122.3682086 | 37.5973795 | 8.94 | 10.77 | 10-15% | No |
| 6085507904 | 3367 | Santa Clara | 95129 | San Jose | -122.001903 | 37.3019066 | 8.94 | 10.76 | 10-15% | No |
| 6085512200 | 4014 | Santa Clara | 95020 | Gilroy | -121.7106173 | 37.0468198 | 8.94 | 10.75 | 10-15% | No |
| 6111006400 | 7126 | Ventura | 91360 | Thousand Oaks | -118.8551917 | 34.2334607 | 8.94 | 10.73 | 10-15% | No |
| 6073020015 | 3841 | San Diego | 92009 | Carlsbad | -117.2387904 | 33.0914037 | 8.94 | 10.72 | 10-15% | No |
| 6065045103 | 3623 | Riverside | 92270 | Rancho Mirage | -116.4468892 | 33.742521 | 8.92 | 10.71 | 10-15% | No |
| 6073008312 | 3629 | San Diego | 92037 | La Jolla | -117.252727 | 32.9053825 | 8.92 | 10.69 | 10-15% | No |
| 6023940000 | 3041 | Humboldt | 95546 | Hoopa | -123.6758045 | 41.0928236 | 8.91 | 10.68 | 10-15% | No |
| 6023000800 | 4668 | Humboldt | 95503 | Eureka | -124.1072319 | 40.8053674 | 8.90 | 10.67 | 10-15% | No |
| 6037143902 | 3000 | Los Angeles | 91423 | Sherman Oaks | -118.4214241 | 34.1358007 | 8.90 | 10.66 | 10-15% | No |
| 6037920108 | 3439 | Los Angeles | 91354 | Valencia | -118.5628759 | 34.4493505 | 8.89 | 10.64 | 10-15% | No |
| 6001450744 | 4831 | Alameda | 94588 | Pleasanton | -121.8650777 | 37.6969336 | 8.89 | 10.63 | 10-15% | No |
| 6001403701 | 2587 | Alameda | 94610 | Oakland | -122.2586656 | 37.8112134 | 8.89 | 10.62 | 10-15% | No |
| 6037650502 | 4294 | Los Angeles | 90503 | Torrance | -118.3702822 | 33.8530266 | 8.87 | 10.61 | 10-15% | No |
| 6041121100 | 5175 | Marin | 94925 | Corte Madera | -122.5231563 | 37.9240154 | 8.86 | 10.59 | 10-15% | No |
| 6059032033 | 3624 | Orange | 92692 | Mission Viejo | -117.6399964 | 33.6452845 | 8.85 | 10.58 | 10-15% | No |
| 6087120800 | 5863 | Santa Cruz | 95060 | Santa Cruz | -122.0312516 | 37.0239056 | 8.84 | 10.57 | 10-15% | No |
| 6081609000 | 2562 | San Mateo | 94002 | Belmont | -122.2802497 | 37.5134397 | 8.83 | 10.56 | 10-15% | No |
| 6037576700 | 4047 | Los Angeles | 90803 | Long Beach | -118.1618264 | 33.7618269 | 8.83 | 10.54 | 10-15% | No |
| 6057000104 | 3190 | Nevada | 95949 | Grass Valley | -121.0640131 | 39.1531128 | 8.83 | 10.53 | 10-15% | No |
| 6087100400 | 7331 | Santa Cruz | 95064 | Santa Cruz | -122.0590224 | 36.9911069 | 8.82 | 10.52 | 10-15% | No |
| 6085510001 | 6116 | Santa Clara | 94024 | Los Altos | -122.0797574 | 37.358449 | 8.81 | 10.51 | 10-15% | No |
| 6081608002 | 3517 | San Mateo | 94404 | San Mateo | -122.2676162 | 37.5485489 | 8.79 | 10.49 | 10-15% | No |
| 6073009801 | 4894 | San Diego | 92119 | San Diego | -117.030735 | 32.7984505 | 8.78 | 10.48 | 10-15% | No |
| 6075016801 | 3218 | San Francisco | 94117 | San Francisco | -122.4290086 | 37.7713294 | 8.78 | 10.47 | 10-15% | No |
| 6041111000 | 5852 | Marin | 94901 | San Rafael | -122.5368593 | 37.970285 | 8.78 | 10.46 | 10-15% | No |
| 6067002500 | 1587 | Sacramento | 95818 | Sacramento | -121.4812453 | 38.5455452 | 8.77 | 10.44 | 10-15% | No |
| 6017031406 | 5544 | El Dorado | 95726 | Pollock Pines | -120.5909221 | 38.707909 | 8.76 | 10.43 | 10-15% | No |
| 6079012704 | 8650 | San Luis Obispo | 93465 | Templeton | -120.7549322 | 35.5166981 | 8.76 | 10.42 | 10-15% | No |
| 6013384000 | 3883 | Contra Costa | 94530 | El Cerrito | -122.3121629 | 37.9340267 | 8.76 | 10.40 | 10-15% | No |
| 6059099245 | 3035 | Orange | 92646 | Huntington Beach | -117.9842913 | 33.6794349 | 8.75 | 10.39 | 10-15% | No |
| 6037920012 | 1072 | Los Angeles | 91390 | Santa Clarita | -118.3491278 | 34.5927585 | 8.75 | 10.38 | 10-15% | No |
| 6037480703 | 3277 | Los Angeles | 91030 | South Pasadena | -118.1627758 | 34.1100789 | 8.75 | 10.37 | 10-15% | No |
| 6059042109 | 4865 | Orange | 92672 | San Clemente | -117.5947849 | 33.4458787 | 8.73 | 10.35 | 10-15% | No |
| 6073016605 | 7339 | San Diego | 92071 | Santee | -117.0146944 | 32.8277308 | 8.73 | 10.34 | 10-15% | No |
| 6073007905 | 2584 | San Diego | 92109 | San Diego | -117.2526157 | 32.7996991 | 8.72 | 10.33 | 10-15% | No |
| 6059032040 | 2612 | Orange | 92692 | Mission Viejo | -117.6535608 | 33.5812401 | 8.72 | 10.32 | 10-15% | No |
| 6061023400 | 4479 | Placer | 95648 | Lincoln | -121.3490202 | 38.910134 | 8.72 | 10.30 | 10-15% | No |
| 6073017031 | 3853 | San Diego | 92127 | San Diego | -117.0847186 | 33.0281424 | 8.72 | 10.29 | 10-15% | No |
| 6043000301 | 3743 | Mariposa | 95338 | Mariposa | -119.8405416 | 37.4300671 | 8.72 | 10.28 | 10-15% | No |
| 6073020811 | 5650 | San Diego | 92065 | Ramona | -116.7742268 | 33.0025617 | 8.71 | 10.27 | 10-15% | No |
| 6077004201 | 6412 | San Joaquin | 95242 | Lodi | -121.2975153 | 38.1377405 | 8.71 | 10.25 | 10-15% | No |
| 6085511301 | 3671 | Santa Clara | 94301 | Palo Alto | -122.1533718 | 37.4431603 | 8.70 | 10.24 | 10-15% | No |
| 6001451403 | 2220 | Alameda | 94551 | Livermore | -121.7842334 | 37.6912085 | 8.70 | 10.23 | 10-15% | No |
| 6065044517 | 2377 | Riverside | 92240 | Desert Hot Springs | -116.5359901 | 33.9823125 | 8.70 | 10.22 | 10-15% | No |
| 6007000402 | 7030 | Butte | 95973 | Chico | -121.8785043 | 39.7558816 | 8.69 | 10.20 | 10-15% | No |
| 6061020501 | 2879 | Placer | 95658 | Newcastle | -121.1494119 | 38.8878788 | 8.68 | 10.19 | 10-15% | No |
| 6081607000 | 3241 | San Mateo | 94403 | San Mateo | -122.3232206 | 37.5247152 | 8.68 | 10.18 | 10-15% | No |
| 6065045228 | 3936 | Riverside | 92241 | Desert Hot Springs | -116.2439847 | 33.8022017 | 8.67 | 10.17 | 10-15% | No |
| 6037920045 | 4622 | Los Angeles | 91350 | Santa Clarita | -118.5168986 | 34.4533926 | 8.66 | 10.15 | 10-15% | No |
| 6061022002 | 6481 | Placer | 95713 | Colfax | -120.952832 | 39.0578866 | 8.66 | 10.14 | 10-15% | No |
| 6097152501 | 4178 | Sonoma | 95409 | Santa Rosa | -122.6567845 | 38.4655784 | 8.66 | 10.13 | 10-15% | No |
| 6037670201 | 3852 | Los Angeles | 90274 | Palos Verdes Peninsul | -118.3386906 | 33.7797891 | 8.65 | 10.11 | 10-15% | No |
| 6073009703 | 3446 | San Diego | 92120 | San Diego | -117.0736093 | 32.795586 | 8.65 | 10.10 | 10-15% | No |
| 6009000503 | 2330 | Calaveras | 95223 | Arnold | -120.3311458 | 38.2341994 | 8.65 | 10.09 | 10-15% | No |
| 6059001602 | 4687 | Orange | 92831 | Fullerton | -117.9021254 | 33.8908928 | 8.65 | 10.08 | 10-15% | No |
| 6079010002 | 3030 | San Luis Obispo | 93446 | Paso Robles | -120.9347036 | 35.7303268 | 8.65 | 10.06 | 10-15% | No |
| 6073019808 | 4321 | San Diego | 92056 | Oceanside | -117.2628851 | 33.1620932 | 8.63 | 10.05 | 10-15% | No |
| 6037480702 | 4460 | Los Angeles | 91030 | South Pasadena | -118.1699079 | 34.1049373 | 8.63 | 10.04 | 10-15% | No |
| 6075015802 | 2965 | San Francisco | 94115 | San Francisco | -122.4385023 | 37.778079 | 8.61 | 10.03 | 10-15% | No |
| 6065047201 | 1958 | Riverside | 92241 | Desert Hot Springs | -116.431917 | 33.9177524 | 8.61 | 10.01 | 10-15% | No |
| 6081608900 | 6556 | San Mateo | 94002 | Belmont | -122.303064 | 37.5037677 | 8.60 | 10.00 | 10-15% | No |
| 6037265420 | 1811 | Los Angeles | 90049 | Los Angeles | -118.4594426 | 34.0704417 | 8.60 | 9.99 | 5-10% | No |
| 6017030902 | 4687 | El Dorado | 95667 | Placerville | -120.8954226 | 38.7186274 | 8.60 | 9.98 | 5-10% | No |
| 6081605300 | 4602 | San Mateo | 94010 | Burlingame | -122.3620094 | 37.5820548 | 8.59 | 9.96 | 5-10% | No |
| 6013355301 | 7833 | Contra Costa | 94521 | Concord | -121.9702207 | 37.9368163 | 8.59 | 9.95 | 5-10% | No |
| 6111000902 | 2026 | Ventura | 93023 | Ojai | -119.1956252 | 34.4205324 | 8.59 | 9.94 | 5-10% | No |
| 6013345101 | 5730 | Contra Costa | 94583 | San Ramon | -121.9386173 | 37.7319234 | 8.59 | 9.93 | 5-10% | No |
| 6037920015 | 6353 | Los Angeles | 91390 | Santa Clarita | -118.527587 | 34.4734725 | 8.59 | 9.91 | 5-10% | No |
| 6073017401 | 5355 | San Diego | 92007 | Cardiff By the Sea | -117.2792618 | 33.0216822 | 8.58 | 9.90 | 5-10% | No |
| 6073017020 | 3694 | San Diego | 92064 | Poway | -117.010947 | 33.041943 | 8.58 | 9.89 | 5-10% | No |
| 6073020801 | 5230 | San Diego | 92065 | Ramona | -116.9387595 | 33.0052699 | 8.57 | 9.88 | 5-10% | No |
| 6075031000 | 3494 | San Francisco | 94112 | San Francisco | -122.4571587 | 37.7286172 | 8.57 | 9.86 | 5-10% | No |
| 6059032056 | 7072 | Orange | 92675 | San Juan Capistrano | -117.6004507 | 33.5436042 | 8.57 | 9.85 | 5-10% | No |
| 6105000400 | 975 | Trinity | 39 | Southeast Trinity Cou | -123.2109469 | 40.0696019 | 8.57 | 9.84 | 5-10% | No |
| 6085502908 | 6683 | Santa Clara | 95124 | San Jose | -121.9087056 | 37.2593174 | 8.56 | 9.82 | 5-10% | No |
| 6081611400 | 4237 | San Mateo | 94027 | Atherton | -122.2147667 | 37.4463 | 8.56 | 9.81 | 5-10% | No |
| 6105000101 | 2867 | Trinity | 96052 | Lewiston | -122.7826336 | 40.8451769 | 8.56 | 9.80 | 5-10% | No |
| 6073008362 | 3141 | San Diego | 92037 | La Jolla | -117.2334092 | 32.8589728 | 8.55 | 9.79 | 5-10% | No |
| 6013325000 | 5514 | Contra Costa | 94523 | Pleasant Hill | -122.0743488 | 37.9354669 | 8.53 | 9.77 | 5-10% | No |
| 6061023900 | 3100 | Placer | 95648 | Lincoln | -121.3278582 | 38.8889816 | 8.53 | 9.76 | 5-10% | No |
| 6023000700 | 5360 | Humboldt | 95503 | Eureka | -124.1483154 | 40.7691596 | 8.52 | 9.75 | 5-10% | No |
| 6087120400 | 4993 | Santa Cruz | 95006 | Boulder Creek | -122.1354489 | 37.1289134 | 8.51 | 9.74 | 5-10% | No |
| 6085509902 | 4838 | Santa Clara | 94040 | Mountain View | -122.0718932 | 37.370027 | 8.51 | 9.72 | 5-10% | No |
| 6059021823 | 3299 | Orange | 92886 | Yorba Linda | -117.7814573 | 33.8969724 | 8.50 | 9.71 | 5-10% | No |
| 6017030901 | 3020 | El Dorado | 95667 | Placerville | -120.9351333 | 38.7788639 | 8.49 | 9.70 | 5-10% | No |
| 6061021902 | 4454 | Placer | 95722 | Meadow Vista | -121.0246048 | 39.0089065 | 8.49 | 9.69 | 5-10% | No |
| 6059032055 | 3884 | Orange | 92688 | Rancho Santa Margar | -117.5842869 | 33.6425298 | 8.48 | 9.67 | 5-10% | No |
| 6067008506 | 2520 | Sacramento | 95630 | Folsom | -121.1389007 | 38.6706643 | 8.48 | 9.66 | 5-10% | No |
| 6085502601 | 2626 | Santa Clara | 95125 | San Jose | -121.9147109 | 37.2902332 | 8.48 | 9.65 | 5-10% | No |
| 6037401001 | 3140 | Los Angeles | 91741 | Glendora | -117.8524608 | 34.1408729 | 8.48 | 9.64 | 5-10% | No |
| 6059021829 | 5329 | Orange | 92886 | Yorba Linda | -117.780736 | 33.8838283 | 8.47 | 9.62 | 5-10% | No |
| 6113010505 | 4807 | Yolo | 95776 | Woodland | -121.7446437 | 38.5944095 | 8.46 | 9.61 | 5-10% | No |
| 6085511704 | 4520 | Santa Clara | 94022 | Los Altos | -122.1409467 | 37.3611924 | 8.45 | 9.60 | 5-10% | No |
| 6073017808 | 5975 | San Diego | 92011 | Carlsbad | -117.2875241 | 33.0980696 | 8.45 | 9.59 | 5-10% | No |
| 6065045109 | 3831 | Riverside | 92253 | La Quinta | -116.3122385 | 33.6549641 | 8.45 | 9.57 | 5-10% | No |
| 6017030809 | 2447 | El Dorado | 95682 | Shingle Springs | -120.984193 | 38.6628212 | 8.45 | 9.56 | 5-10% | No |
| 6111007507 | 6958 | Ventura | 93065 | Simi Valley | -118.8089778 | 34.2377255 | 8.44 | 9.55 | 5-10% | No |
| 6085510600 | 6139 | Santa Clara | 94306 | Palo Alto | -122.1302624 | 37.4087599 | 8.44 | 9.53 | 5-10% | No |
| 6037460100 | 5793 | Los Angeles | 91001 | Altadena | -118.1161844 | 34.1920485 | 8.43 | 9.52 | 5-10% | No |
| 6073017019 | 5883 | San Diego | 92128 | San Diego | -117.0511483 | 33.0414758 | 8.43 | 9.51 | 5-10% | No |
| 6073017110 | 10622 | San Diego | 92029 | Escondido | -117.1842996 | 33.0651162 | 8.43 | 9.50 | 5-10% | No |
| 6073016811 | 4374 | San Diego | 92040 | Lakeside | -116.8973197 | 32.8465129 | 8.42 | 9.48 | 5-10% | No |
| 6075030202 | 4313 | San Francisco | 94122 | San Francisco | -122.4673274 | 37.7630839 | 8.42 | 9.47 | 5-10% | No |
| 6017030504 | 2912 | El Dorado | 96150 | South Lake Tahoe | -119.9479318 | 38.90693 | 8.42 | 9.46 | 5-10% | No |
| 6059052428 | 6217 | Orange | 92679 | Trabuco Canyon | -117.6331763 | 33.6797872 | 8.41 | 9.45 | 5-10% | No |
| 6111007510 | 6565 | Ventura | 91362 | Thousand Oaks | -118.8196834 | 34.223312 | 8.41 | 9.43 | 5-10% | No |
| 6061022900 | 5175 | Placer | 95765 | Rocklin | -121.2774336 | 38.8000444 | 8.40 | 9.42 | 5-10% | No |
| 6013345102 | 3895 | Contra Costa | 94583 | San Ramon | -121.9480876 | 37.7449639 | 8.39 | 9.41 | 5-10% | No |
| 6059075603 | 3790 | Orange | 92780 | Tustin | -117.8013386 | 33.7487977 | 8.39 | 9.40 | 5-10% | No |
| 6065045116 | 1492 | Riverside | 92260 | Palm Desert | -116.3969632 | 33.7156735 | 8.38 | 9.38 | 5-10% | No |
| 6007000901 | 2142 | Butte | 95928 | Chico | -121.7616429 | 39.7203605 | 8.37 | 9.37 | 5-10% | No |
| 6037460000 | 4851 | Los Angeles | 91107 | Pasadena | -118.0858736 | 34.1729248 | 8.36 | 9.36 | 5-10% | No |
| 6061023300 | 4365 | Placer | 95648 | Lincoln | -121.3178888 | 38.8758804 | 8.36 | 9.35 | 5-10% | No |
| 6081610304 | 4023 | San Mateo | 94065 | Redwood City | -122.2561516 | 37.5256571 | 8.36 | 9.33 | 5-10% | No |
| 6085503332 | 5363 | Santa Clara | 95135 | San Jose | -121.738317 | 37.281579 | 8.36 | 9.32 | 5-10% | No |
| 6059099238 | 4031 | Orange | 92646 | Huntington Beach | -117.9580722 | 33.6650486 | 8.33 | 9.31 | 5-10% | No |
| 6079013000 | 2539 | San Luis Obispo | 93428 | Cambria | -121.0083144 | 35.5566755 | 8.33 | 9.29 | 5-10% | No |
| 6007000904 | 6071 | Butte | 95928 | Chico | -121.7959706 | 39.7464744 | 8.32 | 9.28 | 5-10% | No |
| 6061021043 | 3355 | Placer | 95747 | Roseville | -121.3194929 | 38.7822691 | 8.32 | 9.27 | 5-10% | No |
| 6085510803 | 2558 | Santa Clara | 94306 | Palo Alto | -122.1184581 | 37.4205589 | 8.31 | 9.26 | 5-10% | No |
| 6073015602 | 2536 | San Diego | 92019 | El Cajon | -116.9069289 | 32.794632 | 8.30 | 9.24 | 5-10% | No |
| 6073015405 | 5765 | San Diego | 92019 | El Cajon | -116.9179144 | 32.7752264 | 8.30 | 9.23 | 5-10% | No |
| 6059075607 | 6065 | Orange | 92782 | Tustin | -117.7820948 | 33.7399828 | 8.30 | 9.22 | 5-10% | No |
| 6037670326 | 3807 | Los Angeles | 90274 | Palos Verdes Peninsul | -118.4049506 | 33.7882095 | 8.30 | 9.21 | 5-10% | No |
| 6087120500 | 5687 | Santa Cruz | 95006 | Boulder Creek | -122.0929441 | 37.1646713 | 8.29 | 9.19 | 5-10% | No |
| 6059062638 | 6161 | Orange | 92656 | Aliso Viejo | -117.7339145 | 33.5791773 | 8.28 | 9.18 | 5-10% | No |
| 6113010511 | 3135 | Yolo | 95616 | Davis | -121.779714 | 38.5577814 | 8.27 | 9.17 | 5-10% | No |
| 6073020708 | 3437 | San Diego | 92025 | Escondido | -117.0674538 | 33.0905318 | 8.27 | 9.16 | 5-10% | No |
| 6037651302 | 6311 | Los Angeles | 90505 | Torrance | -118.3712041 | 33.8068011 | 8.26 | 9.14 | 5-10% | No |
| 6089011403 | 2804 | Shasta | 96002 | Redding | -122.3147793 | 40.5547633 | 8.25 | 9.13 | 5-10% | No |
| 6085512030 | 3074 | Santa Clara | 95123 | San Jose | -121.8242758 | 37.2325432 | 8.24 | 9.12 | 5-10% | No |
| 6075030101 | 4233 | San Francisco | 94122 | San Francisco | -122.4597306 | 37.7642357 | 8.24 | 9.11 | 5-10% | No |
| 6059062634 | 5466 | Orange | 92656 | Aliso Viejo | -117.732059 | 33.5918953 | 8.23 | 9.09 | 5-10% | No |
| 6081612500 | 4153 | San Mateo | 94025 | Menlo Park | -122.177794 | 37.455699 | 8.23 | 9.08 | 5-10% | No |
| 6001404700 | 1954 | Alameda | 94602 | Oakland | -122.2070119 | 37.8133625 | 8.22 | 9.07 | 5-10% | No |
| 6037670701 | 6882 | Los Angeles | 90275 | Rancho Palos Verdes | -118.3131837 | 33.7616705 | 8.21 | 9.06 | 5-10% | No |
| 6073008512 | 4193 | San Diego | 92111 | San Diego | -117.1881489 | 32.8093223 | 8.21 | 9.04 | 5-10% | No |
| 6111005901 | 6716 | Ventura | 91320 | Newbury Park | -118.9463969 | 34.1687001 | 8.21 | 9.03 | 5-10% | No |
| 6073017801 | 6539 | San Diego | 92008 | Carlsbad | -117.3441023 | 33.1753118 | 8.20 | 9.02 | 5-10% | No |
| 6081612600 | 4156 | San Mateo | 94025 | Menlo Park | -122.1817224 | 37.4492215 | 8.20 | 9.00 | 5-10% | No |
| 6071002011 | 4006 | San Bernardino | 91701 | Rancho Cucamonga | -117.6163568 | 34.1541568 | 8.20 | 8.99 | 5-10% | No |
| 6067008513 | 2793 | Sacramento | 95630 | Folsom | -121.1036665 | 38.6509225 | 8.19 | 8.98 | 5-10% | No |
| 6041108200 | 6836 | Marin | 94903 | San Rafael | -122.5475788 | 37.9988992 | 8.19 | 8.97 | 5-10% | No |
| 6073017056 | 4144 | San Diego | 92128 | San Diego | -117.0829654 | 32.9799345 | 8.19 | 8.95 | 5-10% | No |
| 6059032049 | 9368 | Orange | 92688 | Rancho Santa Margar | -117.6147713 | 33.663982 | 8.18 | 8.94 | 5-10% | No |
| 6083001304 | 7522 | Santa Barbara | 93101 | Santa Barbara | -119.7302749 | 34.4120592 | 8.18 | 8.93 | 5-10% | No |
| 6001428302 | 7074 | Alameda | 94502 | Alameda | -122.249779 | 37.7439709 | 8.17 | 8.92 | 5-10% | No |
| 6097151306 | 3636 | Sonoma | 94928 | Rohnert Park | -122.6932768 | 38.347139 | 8.17 | 8.90 | 5-10% | No |
| 6073017010 | 3152 | San Diego | 92064 | Poway | -116.9909735 | 32.9600148 | 8.17 | 8.89 | 5-10% | No |
| 6081603100 | 3275 | San Mateo | 94044 | Pacifica | -122.4730154 | 37.6187444 | 8.16 | 8.88 | 5-10% | No |
| 6073017601 | 4941 | San Diego | 92024 | Encinitas | -117.2787053 | 33.0812238 | 8.16 | 8.87 | 5-10% | No |
| 6001451102 | 4011 | Alameda | 94550 | Livermore | -121.7864954 | 37.6506604 | 8.16 | 8.85 | 5-10% | No |
| 6097154302 | 3747 | Sonoma | 95465 | Occidental | -122.9858107 | 38.3754621 | 8.15 | 8.84 | 5-10% | No |
| 6037800102 | 7078 | Los Angeles | 90290 | Topanga | -118.6226938 | 34.0891923 | 8.15 | 8.83 | 5-10% | No |
| 6059099514 | 5453 | Orange | 92649 | Huntington Beach | -118.0609493 | 33.7222298 | 8.15 | 8.82 | 5-10% | No |
| 6061021037 | 2135 | Placer | 95747 | Roseville | -121.3197295 | 38.7668105 | 8.14 | 8.80 | 5-10% | No |
| 6085502903 | 5075 | Santa Clara | 95125 | San Jose | -121.9050522 | 37.2779339 | 8.14 | 8.79 | 5-10% | No |
| 6001421800 | 2007 | Alameda | 94703 | Berkeley | -122.2782006 | 37.8802854 | 8.14 | 8.78 | 5-10% | No |
| 6061020402 | 3396 | Placer | 95603 | Auburn | -121.0643371 | 38.883438 | 8.13 | 8.77 | 5-10% | No |
| 6075017000 | 3689 | San Francisco | 94114 | San Francisco | -122.4394975 | 37.7648874 | 8.13 | 8.75 | 5-10% | No |
| 6001420300 | 4571 | Alameda | 94706 | Albany | -122.3182668 | 37.8906102 | 8.13 | 8.74 | 5-10% | No |
| 6081609601 | 2944 | San Mateo | 94070 | San Carlos | -122.2833309 | 37.4953071 | 8.13 | 8.73 | 5-10% | No |
| 6001404101 | 2929 | Alameda | 94611 | Oakland | -122.2497952 | 37.8300772 | 8.12 | 8.71 | 5-10% | No |
| 6079011704 | 3336 | San Luis Obispo | 93449 | Pismo Beach | -120.6698317 | 35.1545689 | 8.12 | 8.70 | 5-10% | No |
| 6037621400 | 4414 | Los Angeles | 90277 | Redondo Beach | -118.3796449 | 33.8227549 | 8.11 | 8.69 | 5-10% | No |
| 6111005801 | 5149 | Ventura | 91320 | Newbury Park | -118.973834 | 34.1645363 | 8.11 | 8.68 | 5-10% | No |
| 6085507600 | 5563 | Santa Clara | 95070 | Saratoga | -122.0526843 | 37.2712577 | 8.11 | 8.66 | 5-10% | No |
| 6073018000 | 3711 | San Diego | 92008 | Carlsbad | -117.3499851 | 33.1547915 | 8.10 | 8.65 | 5-10% | No |
| 6017030502 | 2641 | El Dorado | 96150 | South Lake Tahoe | -120.0306547 | 38.8832961 | 8.10 | 8.64 | 5-10% | No |
| 6097153404 | 4011 | Sonoma | 95472 | Sebastopol | -122.8272234 | 38.3819817 | 8.10 | 8.63 | 5-10% | No |
| 6073008306 | 2997 | San Diego | 92122 | San Diego | -117.2264811 | 32.8472028 | 8.10 | 8.61 | 5-10% | No |
| 6073013701 | 2352 | San Diego | 91941 | La Mesa | -116.9918436 | 32.7561469 | 8.09 | 8.60 | 5-10% | No |
| 6085507703 | 7706 | Santa Clara | 95014 | Cupertino | -122.075678 | 37.3194403 | 8.09 | 8.59 | 5-10% | No |
| 6105000200 | 2281 | Trinity | 96010 | Big Bar | -123.2441079 | 40.8228066 | 8.09 | 8.58 | 5-10% | No |
| 6061020710 | 4387 | Placer | 95661 | Roseville | -121.2378798 | 38.7266398 | 8.09 | 8.56 | 5-10% | No |
| 6037901213 | 3553 | Los Angeles | 93551 | Palmdale | -118.3063029 | 34.6300267 | 8.07 | 8.55 | 5-10% | No |
| 6037920338 | 5721 | Los Angeles | 91381 | Stevenson Ranch | -118.5964298 | 34.3860838 | 8.07 | 8.54 | 5-10% | No |
| 6055201800 | 1806 | Napa | 94558 | Napa | -122.2866466 | 38.6404729 | 8.07 | 8.53 | 5-10% | No |
| 6085511914 | 5684 | Santa Clara | 95120 | San Jose | -121.8770809 | 37.2305812 | 8.06 | 8.51 | 5-10% | No |
| 6075033000 | 7764 | San Francisco | 94116 | San Francisco | -122.4834271 | 37.7381567 | 8.06 | 8.50 | 5-10% | No |
| 6039000104 | 4773 | Madera | 93644 | Oakhurst | -119.6159177 | 37.3197594 | 8.05 | 8.49 | 5-10% | No |
| 6085511905 | 3129 | Santa Clara | 95120 | San Jose | -121.8583281 | 37.2147347 | 8.05 | 8.48 | 5-10% | No |
| 6037800202 | 6319 | Los Angeles | 91302 | Calabasas | -118.6846964 | 34.115237 | 8.03 | 8.46 | 5-10% | No |
| 6079011600 | 4292 | San Luis Obispo | 93405 | San Luis Obispo | -120.7501133 | 35.2163137 | 8.02 | 8.45 | 5-10% | No |
| 6065045119 | 2811 | Riverside | 92260 | Palm Desert | -116.3693669 | 33.7324563 | 8.02 | 8.44 | 5-10% | No |
| 6073007903 | 4487 | San Diego | 92109 | San Diego | -117.2397403 | 32.8025162 | 8.01 | 8.42 | 5-10% | No |
| 6059032023 | 13544 | Orange | 92675 | San Juan Capistrano | -117.5516686 | 33.5107583 | 8.00 | 8.41 | 5-10% | No |
| 6071940100 | 1520 | San Bernardino | 92242 | Earp | -114.3064842 | 34.1887788 | 7.99 | 8.40 | 5-10% | No |
| 6089011401 | 3971 | Shasta | 96002 | Redding | -122.334715 | 40.5471256 | 7.98 | 8.39 | 5-10% | No |
| 6085509401 | 3212 | Santa Clara | 94306 | Palo Alto | -122.1144543 | 37.4069811 | 7.97 | 8.37 | 5-10% | No |
| 6075012902 | 3376 | San Francisco | 94123 | San Francisco | -122.4321032 | 37.8006155 | 7.97 | 8.36 | 5-10% | No |
| 6037139702 | 6250 | Los Angeles | 91436 | Encino | -118.509738 | 34.136387 | 7.97 | 8.35 | 5-10% | No |
| 6061023200 | 4960 | Placer | 95648 | Lincoln | -121.3262772 | 38.8545204 | 7.97 | 8.34 | 5-10% | No |
| 6111007201 | 3429 | Ventura | 91362 | Thousand Oaks | -118.8516573 | 34.1938841 | 7.97 | 8.32 | 5-10% | No |
| 6075030900 | 6581 | San Francisco | 94127 | San Francisco | -122.4682602 | 37.7283108 | 7.96 | 8.31 | 5-10% | No |
| 6097150100 | 2322 | Sonoma | 95476 | Sonoma | -122.4269124 | 38.1968029 | 7.96 | 8.30 | 5-10% | No |
| 6057000103 | 7893 | Nevada | 95949 | Grass Valley | -121.0414065 | 39.0593586 | 7.94 | 8.29 | 5-10% | No |
| 6073020810 | 5266 | San Diego | 92065 | Ramona | -116.7875799 | 33.0348099 | 7.94 | 8.27 | 5-10% | No |
| 6089010807 | 4362 | Shasta | 96003 | Redding | -122.3425603 | 40.6326814 | 7.93 | 8.26 | 5-10% | No |
| 6079011902 | 8245 | San Luis Obispo | 93420 | Arroyo Grande | -120.6000992 | 35.1167592 | 7.92 | 8.25 | 5-10% | No |
| 6019005525 | 1244 | Fresno | 93619 | Clovis | -119.6918625 | 36.8804748 | 7.92 | 8.24 | 5-10% | No |
| 6059062644 | 8249 | Orange | 92660 | Newport Beach | -117.8557753 | 33.621174 | 7.91 | 8.22 | 5-10% | No |
| 6037651401 | 2614 | Los Angeles | 90505 | Torrance | -118.3338133 | 33.7863579 | 7.90 | 8.21 | 5-10% | No |
| 6097151800 | 5219 | Sonoma | 95405 | Santa Rosa | -122.6913822 | 38.4427045 | 7.88 | 8.20 | 5-10% | No |
| 6059042324 | 4241 | Orange | 92677 | Laguna Niguel | -117.7268281 | 33.5002639 | 7.88 | 8.19 | 5-10% | No |
| 6081609500 | 4829 | San Mateo | 94070 | San Carlos | -122.277553 | 37.5048796 | 7.88 | 8.17 | 5-10% | No |
| 6037261102 | 4362 | Los Angeles | 90210 | Beverly Hills | -118.4248511 | 34.1131952 | 7.88 | 8.16 | 5-10% | No |
| 6073017052 | 4796 | San Diego | 92128 | San Diego | -117.0749912 | 33.0009657 | 7.88 | 8.15 | 5-10% | No |
| 6037574602 | 1277 | Los Angeles | 90815 | Long Beach | -118.1067858 | 33.7781493 | 7.87 | 8.13 | 5-10% | No |
| 6013360102 | 4326 | Contra Costa | 94803 | El Sobrante | -122.2658347 | 37.9682566 | 7.86 | 8.12 | 5-10% | No |
| 6075030201 | 3928 | San Francisco | 94122 | San Francisco | -122.4737784 | 37.7628146 | 7.85 | 8.11 | 5-10% | No |
| 6073017811 | 6355 | San Diego | 92011 | Carlsbad | -117.3081307 | 33.1143888 | 7.85 | 8.10 | 5-10% | No |
| 6059075605 | 5776 | Orange | 92705 | Santa Ana | -117.7699603 | 33.7768438 | 7.84 | 8.08 | 5-10% | No |

| | | | | | | | | | | |
|---|---|---|---|---|---|---|---|---|---|---|
| 6073013410 | 7073 | San Diego | 91902 | Bonita | -116.9849399 | 32.6833235 | 7.84 | 8.07 | 5-10% | No |
| 6089011802 | 2442 | Shasta | 96003 | Redding | -122.2824461 | 40.661072 | 7.84 | 8.06 | 5-10% | No |
| 6081608013 | 4049 | San Mateo | 94404 | San Mateo | -122.2619095 | 37.54088 | 7.83 | 8.05 | 5-10% | No |
| 6037143901 | 4068 | Los Angeles | 91604 | Studio City | -118.4000483 | 34.1321322 | 7.81 | 8.03 | 5-10% | No |
| 6073008101 | 4009 | San Diego | 92037 | La Jolla | -117.2778263 | 32.8329093 | 7.80 | 8.02 | 5-10% | No |
| 6083001906 | 5870 | Santa Barbara | 93105 | Santa Barbara | -120.020725 | 34.5630379 | 7.79 | 8.01 | 5-10% | No |
| 6065044928 | 3443 | Riverside | 92211 | Palm Desert | -116.3388596 | 33.7388712 | 7.79 | 8.00 | 5-10% | No |
| 6083001706 | 4693 | Santa Barbara | 93108 | Santa Barbara | -119.5131625 | 34.4413978 | 7.79 | 7.98 | 5-10% | No |
| 6057001204 | 2832 | Nevada | 96161 | Truckee | -120.2644328 | 39.333391 | 7.78 | 7.97 | 5-10% | No |
| 6061020605 | 5826 | Placer | 95746 | Granite Bay | -121.1936951 | 38.73169 | 7.78 | 7.96 | 5-10% | No |
| 6073008356 | 3629 | San Diego | 92126 | San Diego | -117.1397621 | 32.9209153 | 7.78 | 7.95 | 5-10% | No |
| 6085510900 | 5354 | Santa Clara | 94306 | Palo Alto | -122.1296816 | 37.4277012 | 7.78 | 7.93 | 5-10% | No |
| 6037460502 | 4417 | Los Angeles | 91011 | La Canada Flintridge | -118.1950103 | 34.2062405 | 7.78 | 7.92 | 5-10% | No |
| 6013334006 | 4767 | Contra Costa | 94521 | Concord | -121.9871443 | 37.9518749 | 7.77 | 7.91 | 5-10% | No |
| 6059063009 | 1674 | Orange | 92660 | Newport Beach | -117.8908902 | 33.6491716 | 7.77 | 7.90 | 5-10% | No |
| 6097151601 | 2901 | Sonoma | 95409 | Santa Rosa | -122.5509594 | 38.4523882 | 7.76 | 7.88 | 5-10% | No |
| 6083002926 | 5328 | Santa Barbara | 93117 | Goleta | -119.8606431 | 34.4130776 | 7.76 | 7.87 | 5-10% | No |
| 6037701201 | 4433 | Los Angeles | 90402 | Santa Monica | -118.4943488 | 34.0412036 | 7.76 | 7.86 | 5-10% | No |
| 6079011701 | 4301 | San Luis Obispo | 93449 | Pismo Beach | -120.6558448 | 35.1656726 | 7.76 | 7.84 | 5-10% | No |
| 6007000103 | 3902 | Butte | 95973 | Chico | -121.8185603 | 39.7680605 | 7.76 | 7.83 | 5-10% | No |
| 6001404000 | 2819 | Alameda | 94611 | Oakland | -122.2536542 | 37.8232774 | 7.75 | 7.82 | 5-10% | No |
| 6111007609 | 2590 | Ventura | 93021 | Moorpark | -118.887996 | 34.2705998 | 7.74 | 7.81 | 5-10% | No |
| 6059099217 | 2354 | Orange | 92646 | Huntington Beach | -117.9514232 | 33.6640382 | 7.74 | 7.79 | 5-10% | No |
| 6083002924 | 5833 | Santa Barbara | 93117 | Goleta | -119.8562324 | 34.4128391 | 7.73 | 7.78 | 5-10% | No |
| 6037621104 | 6649 | Los Angeles | 90254 | Hermosa Beach | -118.3992831 | 33.8575404 | 7.73 | 7.77 | 5-10% | No |
| 6037430501 | 4172 | Los Angeles | 91024 | Sierra Madre | -118.0567151 | 34.1748536 | 7.72 | 7.76 | 5-10% | No |
| 6081606900 | 2470 | San Mateo | 94402 | San Mateo | -122.3457627 | 37.5200289 | 7.72 | 7.74 | 5-10% | No |
| 6073020016 | 9314 | San Diego | 92009 | Carlsbad | -117.2527759 | 33.0779769 | 7.71 | 7.73 | 5-10% | No |
| 6073018801 | 3614 | San Diego | 92028 | Fallbrook | -117.2348433 | 33.3418007 | 7.71 | 7.72 | 5-10% | No |
| 6073016609 | 5227 | San Diego | 92071 | Santee | -116.978192 | 32.8753135 | 7.69 | 7.71 | 5-10% | No |
| 6059042112 | 6858 | Orange | 92673 | San Clemente | -117.6162586 | 33.4573102 | 7.69 | 7.69 | 5-10% | No |
| 6073017042 | 7869 | San Diego | 92128 | San Diego | -117.0854107 | 32.9403015 | 7.68 | 7.68 | 5-10% | No |
| 6097150204 | 3678 | Sonoma | 95476 | Sonoma | -122.451008 | 38.2867715 | 7.66 | 7.67 | 5-10% | No |
| 6073021204 | 5239 | San Diego | 91901 | Alpine | -116.7641322 | 32.8078834 | 7.65 | 7.66 | 5-10% | No |
| 6059032030 | 3819 | Orange | 92691 | Mission Viejo | -117.6614068 | 33.6414325 | 7.65 | 7.64 | 5-10% | No |
| 6073008501 | 5271 | San Diego | 92117 | San Diego | -117.2237382 | 32.8318456 | 7.64 | 7.63 | 5-10% | No |
| 6111007508 | 3722 | Ventura | 91362 | Thousand Oaks | -118.8453433 | 34.2151494 | 7.63 | 7.62 | 5-10% | No |
| 6037400404 | 4453 | Los Angeles | 91741 | Glendora | -117.8287768 | 34.1537602 | 7.62 | 7.60 | 5-10% | No |
| 6073017029 | 8823 | San Diego | 92014 | Del Mar | -117.183626 | 32.9909105 | 7.62 | 7.59 | 5-10% | No |
| 6061023000 | 3191 | Placer | 95765 | Rocklin | -121.2959935 | 38.8062227 | 7.62 | 7.58 | 5-10% | No |
| 6065045125 | 3017 | Riverside | 92260 | Palm Desert | -116.3457042 | 33.6569608 | 7.61 | 7.57 | 5-10% | No |
| 6037464200 | 5937 | Los Angeles | 91108 | San Marino | -118.0983767 | 34.1273015 | 7.61 | 7.55 | 5-10% | No |
| 6075032700 | 6572 | San Francisco | 94122 | San Francisco | -122.4911676 | 37.760167 | 7.61 | 7.54 | 5-10% | No |
| 6073013416 | 3780 | San Diego | 91913 | Chula Vista | -116.9935066 | 32.6481404 | 7.59 | 7.53 | 5-10% | No |
| 6065940600 | 3026 | Riverside | 92270 | Rancho Mirage | -116.4318477 | 33.825793 | 7.57 | 7.52 | 5-10% | No |
| 6041121200 | 5601 | Marin | 94925 | Corte Madera | -122.4958083 | 37.9402451 | 7.57 | 7.50 | 5-10% | No |
| 6073020014 | 7006 | San Diego | 92009 | Carlsbad | -117.2469015 | 33.0991711 | 7.56 | 7.49 | 5-10% | No |
| 6037620400 | 5090 | Los Angeles | 90266 | Manhattan Beach | -118.3862707 | 33.8941912 | 7.56 | 7.48 | 5-10% | No |
| 6085506202 | 6959 | Santa Clara | 95129 | San Jose | -121.9904291 | 37.3011234 | 7.55 | 7.47 | 5-10% | No |
| 6073008346 | 4615 | San Diego | 92121 | San Diego | -117.1877825 | 32.9125478 | 7.55 | 7.45 | 5-10% | No |
| 6037910813 | 3535 | Los Angeles | 91390 | Santa Clarita | -118.3048498 | 34.5152531 | 7.54 | 7.44 | 5-10% | No |
| 6059032034 | 5898 | Orange | 92692 | Mission Viejo | -117.629962 | 33.6394474 | 7.52 | 7.43 | 5-10% | No |
| 6085503312 | 3365 | Santa Clara | 95148 | San Jose | -121.7629797 | 37.3488066 | 7.52 | 7.42 | 5-10% | No |
| 6081607100 | 2879 | San Mateo | 94403 | San Mateo | -122.3046302 | 37.5272052 | 7.51 | 7.40 | 5-10% | No |
| 6041131100 | 1038 | Marin | 94930 | Fairfax | -122.5974613 | 37.9207112 | 7.51 | 7.39 | 5-10% | No |
| 6013345105 | 6223 | Contra Costa | 94526 | Danville | -121.9795982 | 37.7966528 | 7.51 | 7.38 | 5-10% | No |
| 6113010605 | 3559 | Yolo | 95618 | Davis | -121.6965388 | 38.5598935 | 7.50 | 7.37 | 5-10% | No |
| 6017031503 | 2810 | El Dorado | 95623 | El Dorado | -120.8721231 | 38.5855876 | 7.49 | 7.35 | 5-10% | No |
| 6041102202 | 5885 | Marin | 94945 | Novato | -122.5912651 | 38.1166035 | 7.47 | 7.34 | 5-10% | No |
| 6097150500 | 5283 | Sonoma | 95442 | Glen Ellen | -122.5375898 | 38.3800529 | 7.46 | 7.33 | 5-10% | No |
| 6081605500 | 4914 | San Mateo | 94010 | Burlingame | -122.3482883 | 37.5765511 | 7.46 | 7.31 | 5-10% | No |
| 6059021830 | 5862 | Orange | 92887 | Yorba Linda | -117.7666421 | 33.8796577 | 7.45 | 7.30 | 5-10% | No |
| 6035040500 | 3213 | Lassen | 96114 | Janesville | -120.5179712 | 40.2835896 | 7.42 | 7.29 | 5-10% | No |
| 6037262200 | 4675 | Los Angeles | 90077 | Los Angeles | -118.4698011 | 34.1017214 | 7.41 | 7.28 | 5-10% | No |
| 6075042800 | 2376 | San Francisco | 94121 | San Francisco | -122.4885865 | 37.7880433 | 7.39 | 7.26 | 5-10% | No |
| 6001430400 | 2046 | Alameda | 94546 | Castro Valley | -122.1010932 | 37.7202531 | 7.39 | 7.25 | 5-10% | No |
| 6037650702 | 4590 | Los Angeles | 90503 | Torrance | -118.3675825 | 33.832222 | 7.38 | 7.24 | 5-10% | No |
| 6041123000 | 2074 | Marin | 94920 | Belvedere Tiburon | -122.4672874 | 37.8713791 | 7.36 | 7.23 | 5-10% | No |
| 6073002001 | 3354 | San Diego | 92116 | San Diego | -117.104299 | 32.7699149 | 7.35 | 7.21 | 5-10% | No |
| 6073017036 | 3276 | San Diego | 92129 | San Diego | -117.1225603 | 32.9597794 | 7.35 | 7.20 | 5-10% | No |
| 6019005518 | 2753 | Fresno | 93619 | Clovis | -119.6445547 | 36.8605423 | 7.35 | 7.19 | 5-10% | No |
| 6037463300 | 2041 | Los Angeles | 91107 | Pasadena | -118.102517 | 34.1392184 | 7.35 | 7.18 | 5-10% | No |
| 6019005503 | 4254 | Fresno | 93730 | Fresno | -119.7682639 | 36.9039783 | 7.35 | 7.16 | 5-10% | No |
| 6085507401 | 5624 | Santa Clara | 95070 | Saratoga | -122.0182629 | 37.2882356 | 7.34 | 7.15 | 5-10% | No |
| 6075013000 | 4044 | San Francisco | 94123 | San Francisco | -122.4305121 | 37.7972449 | 7.33 | 7.14 | 5-10% | No |
| 6059062645 | 6084 | Orange | 92657 | Newport Coast | -117.838955 | 33.6147718 | 7.32 | 7.13 | 5-10% | No |
| 6053010701 | 6769 | Monterey | 93908 | Salinas | -121.6553273 | 36.5796828 | 7.30 | 7.11 | 5-10% | No |
| 6013355115 | 4443 | Contra Costa | 94582 | San Ramon | -121.9127563 | 37.7631598 | 7.30 | 7.10 | 5-10% | No |
| 6111007402 | 6305 | Ventura | 91362 | Thousand Oaks | -118.8055945 | 34.1828488 | 7.29 | 7.09 | 5-10% | No |
| 6017030801 | 4011 | El Dorado | 95672 | Rescue | -121.010745 | 38.7325771 | 7.29 | 7.08 | 5-10% | No |
| 6079010504 | 2592 | San Luis Obispo | 93430 | Cayucos | -120.8898032 | 35.4395337 | 7.29 | 7.06 | 5-10% | No |
| 6073017109 | 6650 | San Diego | 92009 | Carlsbad | -117.233336 | 33.077855 | 7.28 | 7.05 | 5-10% | No |
| 6013338203 | 4564 | Contra Costa | 94597 | Walnut Creek | -122.0540951 | 37.925633 | 7.28 | 7.04 | 5-10% | No |
| 6085511909 | 7997 | Santa Clara | 95120 | San Jose | -121.8435544 | 37.1861406 | 7.27 | 7.02 | 5-10% | No |
| 6085506803 | 6883 | Santa Clara | 95124 | San Jose | -121.9143194 | 37.2427781 | 7.27 | 7.01 | 5-10% | No |
| 6079010101 | 1843 | San Luis Obispo | 93446 | Paso Robles | -120.7208175 | 35.6362276 | 7.27 | 7.00 | 5-10% | No |
| 6061020602 | 6970 | Placer | 95650 | Loomis | -121.164918 | 38.805202 | 7.27 | 6.99 | 5-10% | No |
| 6083001208 | 4096 | Santa Barbara | 93109 | Santa Barbara | -119.710835 | 34.39838 | 7.26 | 6.97 | 5-10% | No |
| 6037670411 | 4427 | Los Angeles | 90275 | Rancho Palos Verdes | -118.3780098 | 33.7857153 | 7.25 | 6.96 | 5-10% | No |
| 6073008347 | 6358 | San Diego | 92126 | San Diego | -117.1578602 | 32.9234425 | 7.24 | 6.95 | 5-10% | No |
| 6059042331 | 5215 | Orange | 92677 | Laguna Niguel | -117.695926 | 33.5170508 | 7.24 | 6.94 | 5-10% | No |
| 6073008366 | 5881 | San Diego | 92129 | San Diego | -117.160587 | 32.9525769 | 7.23 | 6.92 | 5-10% | No |
| 6073009504 | 5914 | San Diego | 92071 | Santee | -117.0284232 | 32.9019274 | 7.23 | 6.91 | 5-10% | No |
| 6081611200 | 3005 | San Mateo | 94061 | Redwood City | -122.2345855 | 37.4564906 | 7.20 | 6.90 | 5-10% | No |
| 6013390100 | 2229 | Contra Costa | 94530 | El Cerrito | -122.2934783 | 37.9139392 | 7.19 | 6.89 | 5-10% | No |
| 6111006200 | 3003 | Ventura | 91360 | Thousand Oaks | -118.9030079 | 34.2028424 | 7.19 | 6.87 | 5-10% | No |
| 6073009104 | 2775 | San Diego | 92110 | San Diego | -117.1959381 | 32.7798721 | 7.18 | 6.86 | 5-10% | No |
| 6065044919 | 4243 | Riverside | 92260 | Palm Desert | -116.3648175 | 33.7653336 | 7.17 | 6.85 | 5-10% | No |
| 6037194200 | 3588 | Los Angeles | 90046 | Los Angeles | -118.3749964 | 34.1035086 | 7.16 | 6.84 | 5-10% | No |
| 6059042317 | 3331 | Orange | 92677 | Laguna Niguel | -117.7138296 | 33.5110094 | 7.15 | 6.82 | 5-10% | No |
| 6059042337 | 3639 | Orange | 92677 | Laguna Niguel | -117.6870276 | 33.5031281 | 7.15 | 6.81 | 5-10% | No |
| 6059075703 | 4069 | Orange | 92705 | Santa Ana | -117.8074364 | 33.7672498 | 7.14 | 6.80 | 5-10% | No |
| 6059099237 | 3583 | Orange | 92646 | Huntington Beach | -117.9672387 | 33.663539 | 7.14 | 6.79 | 5-10% | No |
| 6037460600 | 4511 | Los Angeles | 91011 | La Canada Flintridge | -118.218217 | 34.2263088 | 7.11 | 6.77 | 5-10% | No |
| 6081608700 | 6974 | San Mateo | 94002 | Belmont | -122.2883303 | 37.5208293 | 7.11 | 6.76 | 5-10% | No |
| 6013338204 | 5662 | Contra Costa | 94598 | Walnut Creek | -122.0467663 | 37.9190883 | 7.11 | 6.75 | 5-10% | No |
| 6037430200 | 1292 | Los Angeles | 91008 | Duarte | -117.9688184 | 34.1531592 | 7.11 | 6.73 | 5-10% | No |
| 6083002906 | 4016 | Santa Barbara | 93117 | Goleta | -119.845687 | 34.4401 | 7.11 | 6.72 | 5-10% | No |
| 6013338301 | 2922 | Contra Costa | 94598 | Walnut Creek | -122.019661 | 37.9200316 | 7.09 | 6.71 | 5-10% | No |
| 6001450605 | 3685 | Alameda | 94566 | Pleasanton | -121.8820197 | 37.6721031 | 7.09 | 6.70 | 5-10% | No |
| 6037262400 | 3233 | Los Angeles | 90049 | Los Angeles | -118.508627 | 34.0918093 | 7.06 | 6.68 | 5-10% | No |
| 6073017045 | 2790 | San Diego | 92131 | San Diego | -117.067832 | 32.9301327 | 7.05 | 6.67 | 5-10% | No |
| 6097153706 | 4092 | Sonoma | 95436 | Forestville | -122.898855 | 38.468933 | 7.04 | 6.66 | 5-10% | No |
| 6081604600 | 2599 | San Mateo | 94030 | Millbrae | -122.4181536 | 37.6002391 | 7.03 | 6.65 | 5-10% | No |
| 6037460501 | 5418 | Los Angeles | 91011 | La Canada Flintridge | -118.1926568 | 34.2181704 | 7.03 | 6.63 | 5-10% | No |
| 6111005910 | 1775 | Ventura | 91320 | Newbury Park | -118.9266027 | 34.1665091 | 7.02 | 6.62 | 5-10% | No |
| 6061023600 | 4565 | Placer | 95648 | Lincoln | -121.2638454 | 38.856861 | 7.01 | 6.61 | 5-10% | No |
| 6037460700 | 5034 | Los Angeles | 91011 | La Canada Flintridge | -118.1988193 | 34.1933667 | 7.01 | 6.60 | 5-10% | No |
| 6087120900 | 8360 | Santa Cruz | 95066 | Scotts Valley | -122.0142312 | 37.0741254 | 7.00 | 6.58 | 5-10% | No |
| 6017030710 | 4989 | El Dorado | 95762 | El Dorado Hills | -121.0617481 | 38.6825337 | 6.99 | 6.57 | 5-10% | No |
| 6081613200 | 6494 | San Mateo | 94028 | Portola Valley | -122.2158436 | 37.3697092 | 6.98 | 6.56 | 5-10% | No |
| 6059042326 | 4608 | Orange | 92677 | Laguna Niguel | -117.7195001 | 33.536825 | 6.97 | 6.55 | 5-10% | No |
| 6085511916 | 4669 | Santa Clara | 95118 | San Jose | -121.8966886 | 37.2367224 | 6.96 | 6.53 | 5-10% | No |
| 6067009406 | 2390 | Sacramento | 95638 | Herald | -121.1238857 | 38.3134475 | 6.95 | 6.52 | 5-10% | No |
| 6085503002 | 3506 | Santa Clara | 95125 | San Jose | -121.8872658 | 37.2768712 | 6.94 | 6.51 | 5-10% | No |
| 6037620303 | 4547 | Los Angeles | 90266 | Manhattan Beach | -118.4018082 | 33.8915717 | 6.94 | 6.50 | 5-10% | No |
| 6061021038 | 7632 | Placer | 95747 | Roseville | -121.3225905 | 38.7573511 | 6.93 | 6.48 | 5-10% | No |
| 6089010804 | 2745 | Shasta | 96003 | Redding | -122.3243173 | 40.6092572 | 6.93 | 6.47 | 5-10% | No |
| 6061020502 | 4103 | Placer | 95603 | Auburn | -121.0997167 | 38.8567146 | 6.92 | 6.46 | 5-10% | No |
| 6059063005 | 1365 | Orange | 92660 | Newport Beach | -117.8975312 | 33.6108943 | 6.91 | 6.44 | 5-10% | No |
| 6037800332 | 6665 | Los Angeles | 91301 | Agoura Hills | -118.773167 | 34.1610356 | 6.90 | 6.43 | 5-10% | No |
| 6081608023 | 2549 | San Mateo | 94404 | San Mateo | -122.2711802 | 37.5412238 | 6.90 | 6.42 | 5-10% | No |
| 6061021040 | 3493 | Placer | 95747 | Roseville | -121.3472556 | 38.7756083 | 6.89 | 6.41 | 5-10% | No |
| 6085507906 | 4460 | Santa Clara | 95129 | San Jose | -122.0192271 | 37.301992 | 6.89 | 6.39 | 5-10% | No |
| 6037800326 | 4972 | Los Angeles | 91301 | Agoura Hills | -118.8124276 | 34.1237813 | 6.88 | 6.38 | 5-10% | No |
| 6111001700 | 3531 | Ventura | 93003 | Ventura | -119.2122733 | 34.3175245 | 6.88 | 6.37 | 5-10% | No |
| 6059099308 | 5847 | Orange | 92648 | Huntington Beach | -118.0201434 | 33.6791148 | 6.87 | 6.36 | 5-10% | No |
| 6073017054 | 5810 | San Diego | 92064 | Poway | -117.045904 | 32.9895326 | 6.87 | 6.34 | 5-10% | No |
| 6037138000 | 4484 | Los Angeles | 91364 | Woodland Hills | -118.5910501 | 34.1488008 | 6.87 | 6.33 | 5-10% | No |
| 6059062639 | 6996 | Orange | 92656 | Aliso Viejo | -117.7293374 | 33.5601414 | 6.86 | 6.32 | 5-10% | No |
| 6073021304 | 2616 | San Diego | 91935 | Jamul | -116.8687112 | 32.6847916 | 6.86 | 6.31 | 5-10% | No |
| 6017030601 | 5044 | El Dorado | 95664 | Pilot Hill | -121.0317149 | 38.8331487 | 6.84 | 6.29 | 5-10% | No |
| 6081608300 | 3401 | San Mateo | 94404 | San Mateo | -122.24891 | 37.5590519 | 6.84 | 6.28 | 5-10% | No |
| 6041125000 | 4262 | Marin | 94941 | Mill Valley | -122.5058805 | 37.8886599 | 6.83 | 6.27 | 5-10% | No |
| 6083002008 | 6451 | Santa Barbara | 93455 | Santa Maria | -120.425077 | 34.8861824 | 6.82 | 6.26 | 5-10% | No |
| 6083001402 | 3392 | Santa Barbara | 93108 | Santa Barbara | -119.6388981 | 34.4256454 | 6.80 | 6.24 | 5-10% | No |
| 6013345108 | 7353 | Contra Costa | 94582 | San Ramon | -121.9553576 | 37.7784401 | 6.80 | 6.23 | 5-10% | No |
| 6073002002 | 2559 | San Diego | 92115 | San Diego | -117.0929252 | 32.7645572 | 6.79 | 6.22 | 5-10% | No |
| 6073017303 | 3018 | San Diego | 92075 | Solana Beach | -117.2636285 | 33.0018126 | 6.78 | 6.21 | 5-10% | No |
| 6013355302 | 3484 | Contra Costa | 94598 | Walnut Creek | -121.9944596 | 37.9210134 | 6.77 | 6.19 | 5-10% | No |
| 6041130201 | 3191 | Marin | 94965 | Sausalito | -122.4855376 | 37.8510768 | 6.77 | 6.18 | 5-10% | No |
| 6061021039 | 1771 | Placer | 95747 | Roseville | -121.3520569 | 38.7846135 | 6.76 | 6.17 | 5-10% | No |
| 6059062619 | 3885 | Orange | 92651 | Laguna Beach | -117.7681955 | 33.5409778 | 6.75 | 6.15 | 5-10% | No |
| 6061022300 | 709 | Placer | 96142 | Tahoma | -120.1683531 | 39.0701937 | 6.74 | 6.14 | 5-10% | No |
| 6073009805 | 4715 | San Diego | 92119 | San Diego | -117.0343554 | 32.8156078 | 6.74 | 6.13 | 5-10% | No |
| 6059042338 | 4580 | Orange | 92629 | Dana Point | -117.7050638 | 33.4834258 | 6.73 | 6.12 | 5-10% | No |
| 6037800406 | 2644 | Los Angeles | 90265 | Malibu | -118.8610455 | 34.0602402 | 6.71 | 6.10 | 5-10% | No |
| 6023010501 | 6635 | Humboldt | 95519 | McKinleyville | -124.1129005 | 40.9390795 | 6.70 | 6.09 | 5-10% | No |
| 6097154304 | 2400 | Sonoma | 95421 | Cazadero | -123.1933099 | 38.6435073 | 6.70 | 6.08 | 5-10% | No |
| 6073015502 | 2748 | San Diego | 92019 | El Cajon | -116.8356541 | 32.8013941 | 6.70 | 6.07 | 5-10% | No |
| 6059052513 | 5675 | Orange | 92604 | Irvine | -117.7893092 | 33.6786721 | 6.69 | 6.05 | 5-10% | No |
| 6073008328 | 5162 | San Diego | 92130 | San Diego | -117.2061538 | 32.9681969 | 6.69 | 6.04 | 5-10% | No |
| 6079011001 | 5314 | San Luis Obispo | 93401 | San Luis Obispo | -120.6236236 | 35.2739653 | 6.69 | 6.03 | 5-10% | No |
| 6017030803 | 7241 | El Dorado | 95682 | Shingle Springs | -120.9574313 | 38.6856815 | 6.68 | 6.02 | 5-10% | No |
| 6073007302 | 2060 | San Diego | 92107 | San Diego | -117.2446667 | 32.7357705 | 6.68 | 6.00 | 5-10% | No |
| 6073015406 | 2492 | San Diego | 92019 | El Cajon | -116.8984176 | 32.7723038 | 6.68 | 5.99 | 5-10% | No |
| 6057000401 | 5744 | Nevada | 95975 | Rough and Ready | -121.1801765 | 39.24605 | 6.66 | 5.98 | 5-10% | No |
| 6059042325 | 3375 | Orange | 92677 | Laguna Niguel | -117.7312595 | 33.5255567 | 6.66 | 5.97 | 5-10% | No |
| 6085503334 | 8854 | Santa Clara | 95138 | San Jose | -121.7688495 | 37.2791433 | 6.66 | 5.95 | 5-10% | No |
| 6085509802 | 2719 | Santa Clara | 94040 | Mountain View | -122.0823435 | 37.3787632 | 6.66 | 5.94 | 5-10% | No |
| 6061022100 | 961 | Placer | 96145 | Tahoe City | -120.2181031 | 39.1164345 | 6.65 | 5.93 | 5-10% | No |
| 6073007701 | 3703 | San Diego | 92109 | San Diego | -117.2400754 | 32.7883849 | 6.64 | 5.91 | 5-10% | No |
| 6075017102 | 3451 | San Francisco | 94117 | San Francisco | -122.4504754 | 37.7654353 | 6.64 | 5.90 | 5-10% | No |
| 6087100900 | 4236 | Santa Cruz | 95062 | Santa Cruz | -122.0044552 | 36.9696357 | 6.62 | 5.89 | 5-10% | No |
| 6059062633 | 6545 | Orange | 92656 | Aliso Viejo | -117.7391584 | 33.563581 | 6.62 | 5.88 | 5-10% | No |
| 6083002013 | 2737 | Santa Barbara | 93455 | Santa Maria | -120.4778503 | 34.8835245 | 6.62 | 5.86 | 5-10% | No |
| 6085509801 | 5274 | Santa Clara | 94024 | Los Altos | -122.0894803 | 37.378811 | 6.62 | 5.85 | 5-10% | No |
| 6065044917 | 3911 | Riverside | 92270 | Rancho Mirage | -116.4163763 | 33.7755085 | 6.61 | 5.84 | 5-10% | No |
| 6073007100 | 5029 | San Diego | 92106 | San Diego | -117.2390197 | 32.7171992 | 6.59 | 5.83 | 5-10% | No |
| 6061021901 | 3060 | Placer | 95703 | Applegate | -120.9841213 | 38.993655 | 6.59 | 5.81 | 5-10% | No |
| 6081608001 | 3393 | San Mateo | 94404 | San Mateo | -122.2576522 | 37.55112 | 6.58 | 5.80 | 5-10% | No |
| 6013348000 | 4587 | Contra Costa | 94549 | Lafayette | -122.132124 | 37.9026902 | 6.58 | 5.79 | 5-10% | No |
| 6075021600 | 3836 | San Francisco | 94131 | San Francisco | -122.4381417 | 37.7454964 | 6.57 | 5.78 | 5-10% | No |
| 6037300100 | 6002 | Los Angeles | 91214 | La Crescenta | -118.2325716 | 34.2442558 | 6.56 | 5.76 | 5-10% | No |
| 6037670702 | 5477 | Los Angeles | 90275 | Rancho Palos Verdes | -118.3284429 | 33.7535997 | 6.55 | 5.75 | 5-10% | No |
| 6085506802 | 5237 | Santa Clara | 95124 | San Jose | -121.93624 | 37.24693 | 6.55 | 5.74 | 5-10% | No |
| 6079010707 | 5751 | San Luis Obispo | 93402 | Los Osos | -120.8503065 | 35.3215844 | 6.54 | 5.73 | 5-10% | No |
| 6083000700 | 6408 | Santa Barbara | 93105 | Santa Barbara | -119.6645571 | 34.4611878 | 6.51 | 5.71 | 5-10% | No |
| 6059021912 | 4828 | Orange | 92869 | Orange | -117.7562327 | 33.8168761 | 6.51 | 5.70 | 5-10% | No |
| 6061021044 | 5719 | Placer | 95747 | Roseville | -121.3353191 | 38.7832996 | 6.50 | 5.69 | 5-10% | No |
| 6083002928 | 4089 | Santa Barbara | 93117 | Goleta | -119.8716978 | 34.4129398 | 6.50 | 5.68 | 5-10% | No |
| 6073007502 | 3227 | San Diego | 92107 | San Diego | -117.2489105 | 32.747805 | 6.50 | 5.66 | 5-10% | No |
| 6073017051 | 4301 | San Diego | 92128 | San Diego | -117.0665065 | 33.0037084 | 6.49 | 5.65 | 5-10% | No |
| 6111001800 | 4302 | Ventura | 93003 | Ventura | -119.230938 | 34.2960463 | 6.49 | 5.64 | 5-10% | No |
| 6059062630 | 1722 | Orange | 92612 | Irvine | -117.7890788 | 33.6520157 | 6.49 | 5.62 | 5-10% | No |
| 6059032037 | 4929 | Orange | 92692 | Mission Viejo | -117.6356879 | 33.6200601 | 6.49 | 5.61 | 5-10% | No |
| 6061021128 | 2686 | Placer | 95677 | Rocklin | -121.2609977 | 38.7870482 | 6.48 | 5.60 | 5-10% | No |
| 6085507301 | 6555 | Santa Clara | 95070 | Saratoga | -122.0078856 | 37.2589677 | 6.47 | 5.59 | 5-10% | No |
| 6087101100 | 5444 | Santa Cruz | 95060 | Santa Cruz | -122.0333899 | 36.9550263 | 6.47 | 5.57 | 5-10% | No |
| 6089011900 | 4511 | Shasta | 96073 | Palo Cedro | -122.2576122 | 40.5229657 | 6.47 | 5.56 | 5-10% | No |
| 6001442000 | 3212 | Alameda | 94539 | Fremont | -121.9351067 | 37.5592488 | 6.47 | 5.55 | 5-10% | No |
| 6037920016 | 4904 | Los Angeles | 91390 | Santa Clarita | -118.5206685 | 34.463885 | 6.46 | 5.54 | 5-10% | No |
| 6057001203 | 2927 | Nevada | 96161 | Truckee | -120.2110907 | 39.353485 | 6.41 | 5.52 | 5-10% | No |
| 6001430200 | 6916 | Alameda | 94552 | Castro Valley | -122.0615667 | 37.7216743 | 6.41 | 5.51 | 5-10% | No |
| 6097152600 | 8365 | Sonoma | 95404 | Santa Rosa | -122.6369331 | 38.5260666 | 6.40 | 5.50 | 5-10% | No |
| 6037139703 | 2943 | Los Angeles | 91356 | Tarzana | -118.5320785 | 34.144579 | 6.39 | 5.49 | 5-10% | No |
| 6085507402 | 3881 | Santa Clara | 95070 | Saratoga | -121.9995034 | 37.2818643 | 6.39 | 5.47 | 5-10% | No |
| 6089010702 | 3896 | Shasta | 96003 | Redding | -122.4132103 | 40.6042154 | 6.38 | 5.46 | 5-10% | No |
| 6073008333 | 13748 | San Diego | 92130 | San Diego | -117.2092215 | 32.9260179 | 6.38 | 5.45 | 5-10% | No |
| 6037134421 | 3941 | Los Angeles | 91307 | West Hills | -118.64714 | 34.202023 | 6.38 | 5.44 | 5-10% | No |
| 6085511200 | 4849 | Santa Clara | 94301 | Palo Alto | -122.1470265 | 37.4511865 | 6.37 | 5.42 | 5-10% | No |
| 6087120600 | 4733 | Santa Cruz | 95018 | Felton | -122.0465656 | 37.0960709 | 6.37 | 5.41 | 5-10% | No |
| 6073008313 | 2225 | San Diego | 92037 | La Jolla | -117.2409319 | 32.8551617 | 6.37 | 5.40 | 5-10% | No |
| 6081613400 | 3093 | San Mateo | 94062 | Redwood City | -122.2862916 | 37.4210369 | 6.36 | 5.39 | 5-10% | No |
| 6087121100 | 2963 | Santa Cruz | 95073 | Soquel | -121.9607648 | 37.0433747 | 6.36 | 5.37 | 5-10% | No |
| 6085511609 | 3183 | Santa Clara | 94304 | Palo Alto | -122.1743786 | 37.4385528 | 6.35 | 5.36 | 5-10% | No |
| 6059042323 | 4512 | Orange | 92629 | Dana Point | -117.7165385 | 33.4741078 | 6.35 | 5.35 | 5-10% | No |
| 6001405100 | 4197 | Alameda | 94610 | Oakland | -122.2321836 | 37.8114477 | 6.34 | 5.33 | 5-10% | No |
| 6073007002 | 2947 | San Diego | 92106 | San Diego | -117.235636 | 32.7323705 | 6.34 | 5.32 | 5-10% | No |
| 6059063006 | 2756 | Orange | 92662 | Newport Beach | -117.8923185 | 33.605086 | 6.34 | 5.31 | 5-10% | No |
| 6073017055 | 5483 | San Diego | 92128 | San Diego | -117.072852 | 32.9794748 | 6.34 | 5.30 | 5-10% | No |

| | | | | | | | | | | |
|---|---|---|---|---|---|---|---|---|---|---|
| 6073008002 | 2522 | San Diego | 92109 | San Diego | -117.2422494 | 32.8083069 | 6.33 | 5.28 | 5-10% | No |
| 6081613900 | 6064 | San Mateo | 94025 | Menlo Park | -122.1619788 | 37.4623955 | 6.33 | 5.27 | 5-10% | No |
| 6061020104 | 1288 | Placer | 96145 | Tahoe City | -120.1453411 | 39.2047708 | 6.32 | 5.26 | 5-10% | No |
| 6013337300 | 6098 | Contra Costa | 94518 | Concord | -122.0080941 | 37.9402165 | 6.32 | 5.25 | 5-10% | No |
| 6041104300 | 1530 | Marin | 94949 | Novato | -122.4996767 | 38.0772539 | 6.32 | 5.23 | 5-10% | No |
| 6059062637 | 4525 | Orange | 92656 | Aliso Viejo | -117.7237974 | 33.5765214 | 6.30 | 5.22 | 5-10% | No |
| 6075020300 | 3034 | San Francisco | 94114 | San Francisco | -122.4294368 | 37.7649411 | 6.30 | 5.21 | 5-10% | No |
| 6059042329 | 3772 | Orange | 92677 | Laguna Niguel | -117.6978084 | 33.5316199 | 6.29 | 5.20 | 5-10% | No |
| 6061020106 | 1719 | Placer | 96143 | Kings Beach | -120.0403968 | 39.2614322 | 6.28 | 5.18 | 5-10% | No |
| 6001421700 | 3198 | Alameda | 94709 | Berkeley | -122.2701843 | 37.8819398 | 6.28 | 5.17 | 5-10% | No |
| 6075035100 | 7842 | San Francisco | 94122 | San Francisco | -122.4991499 | 37.7576269 | 6.28 | 5.16 | 5-10% | No |
| 6083003007 | 3653 | Santa Barbara | 93110 | Santa Barbara | -119.7755258 | 34.4230589 | 6.26 | 5.15 | 5-10% | No |
| 6075021700 | 3948 | San Francisco | 94131 | San Francisco | -122.4392706 | 37.740278 | 6.25 | 5.13 | 5-10% | No |
| 6073008335 | 10541 | San Diego | 92129 | San Diego | -117.155987 | 32.9666949 | 6.25 | 5.12 | 5-10% | No |
| 6073019804 | 4447 | San Diego | 92010 | Carlsbad | -117.3117343 | 33.163745 | 6.24 | 5.11 | 5-10% | No |
| 6073009507 | 3369 | San Diego | 92124 | San Diego | -117.0747667 | 32.8149696 | 6.23 | 5.10 | 5-10% | No |
| 6059032020 | 5715 | Orange | 92692 | Mission Viejo | -117.6438225 | 33.6059752 | 6.22 | 5.08 | 5-10% | No |
| 6073017022 | 5316 | San Diego | 92131 | San Diego | -117.1043719 | 32.9050522 | 6.19 | 5.07 | 5-10% | No |
| 6013349000 | 4686 | Contra Costa | 94549 | Lafayette | -122.10407 | 37.8896916 | 6.19 | 5.06 | 5-10% | No |
| 6073017041 | 6147 | San Diego | 92064 | Poway | -117.0440195 | 32.9657965 | 6.18 | 5.04 | 5-10% | No |
| 6013345115 | 5734 | Contra Costa | 94583 | San Ramon | -121.9816307 | 37.7393783 | 6.18 | 5.03 | 5-10% | No |
| 6085506801 | 5871 | Santa Clara | 95032 | Los Gatos | -121.9563811 | 37.242205 | 6.18 | 5.02 | 5-10% | No |
| 6073011000 | 2799 | San Diego | 92118 | Coronado | -117.170224 | 32.6938849 | 6.18 | 5.01 | 5-10% | No |
| 6013340002 | 7000 | Contra Costa | 94597 | Walnut Creek | -122.0844254 | 37.9107096 | 6.16 | 4.99 | 1-5% (lowest scores) | No |
| 6053011900 | 4449 | Monterey | 93953 | Pebble Beach | -121.9452821 | 36.5852187 | 6.16 | 4.98 | 1-5% (lowest scores) | No |
| 6013345116 | 2859 | Contra Costa | 94583 | San Ramon | -121.9742883 | 37.7642406 | 6.15 | 4.97 | 1-5% (lowest scores) | No |
| 6073007301 | 4948 | San Diego | 92107 | San Diego | -117.252275 | 32.7408214 | 6.14 | 4.96 | 1-5% (lowest scores) | No |
| 6111005306 | 4867 | Ventura | 93012 | Camarillo | -118.9874839 | 34.2327593 | 6.14 | 4.94 | 1-5% (lowest scores) | No |
| 6085507203 | 2632 | Santa Clara | 95032 | Los Gatos | -121.9644741 | 37.2513154 | 6.14 | 4.93 | 1-5% (lowest scores) | No |
| 6013385200 | 1320 | Contra Costa | 94530 | El Cerrito | -122.3087345 | 37.9274762 | 6.14 | 4.92 | 1-5% (lowest scores) | No |
| 6097152300 | 4329 | Sonoma | 95404 | Santa Rosa | -122.6991437 | 38.4600591 | 6.14 | 4.91 | 1-5% (lowest scores) | No |
| 6059032057 | 7218 | Orange | 92694 | Ladera Ranch | -117.6391029 | 33.569062 | 6.14 | 4.89 | 1-5% (lowest scores) | No |
| 6073008330 | 5668 | San Diego | 92130 | San Diego | -117.2211586 | 32.9512328 | 6.09 | 4.88 | 1-5% (lowest scores) | No |
| 6059062643 | 7246 | Orange | 92657 | Newport Coast | -117.829038 | 33.5950883 | 6.09 | 4.87 | 1-5% (lowest scores) | No |
| 6097151602 | 3324 | Sonoma | 95409 | Santa Rosa | -122.5987997 | 38.4219565 | 6.09 | 4.86 | 1-5% (lowest scores) | No |
| 6081609300 | 3315 | San Mateo | 94070 | San Carlos | -122.2518655 | 37.4907772 | 6.08 | 4.84 | 1-5% (lowest scores) | No |
| 6059099415 | 5374 | Orange | 92648 | Huntington Beach | -118.0288122 | 33.6926411 | 6.08 | 4.83 | 1-5% (lowest scores) | No |
| 6001443200 | 3704 | Alameda | 94539 | Fremont | -121.8964116 | 37.4871497 | 6.08 | 4.82 | 1-5% (lowest scores) | No |
| 6041126200 | 4249 | Marin | 94941 | Mill Valley | -122.5225708 | 37.899975 | 6.07 | 4.81 | 1-5% (lowest scores) | No |
| 6073009704 | 5750 | San Diego | 92120 | San Diego | -117.0607193 | 32.8068307 | 6.07 | 4.79 | 1-5% (lowest scores) | No |
| 6059042330 | 6378 | Orange | 92677 | Laguna Niguel | -117.6933882 | 33.5264817 | 6.07 | 4.78 | 1-5% (lowest scores) | No |
| 6013355304 | 7831 | Contra Costa | 94517 | Clayton | -121.9288441 | 37.9505922 | 6.04 | 4.77 | 1-5% (lowest scores) | No |
| 6037262303 | 3290 | Los Angeles | 90049 | Los Angeles | -118.4868492 | 34.0660696 | 6.03 | 4.75 | 1-5% (lowest scores) | No |
| 6111007405 | 6304 | Ventura | 91301 | Agoura Hills | -118.7204079 | 34.1885775 | 6.03 | 4.74 | 1-5% (lowest scores) | No |
| 6075030302 | 3549 | San Francisco | 94116 | San Francisco | -122.4716376 | 37.7519442 | 6.03 | 4.73 | 1-5% (lowest scores) | No |
| 6073008200 | 3022 | San Diego | 92037 | La Jolla | -117.2757498 | 32.845504 | 6.02 | 4.72 | 1-5% (lowest scores) | No |
| 6075020402 | 3997 | San Francisco | 94131 | San Francisco | -122.4444148 | 37.7528357 | 6.01 | 4.70 | 1-5% (lowest scores) | No |
| 6013321102 | 6689 | Contra Costa | 94523 | Pleasant Hill | -122.0929535 | 37.9754127 | 6.01 | 4.69 | 1-5% (lowest scores) | No |
| 6037621001 | 4119 | Los Angeles | 90254 | Hermosa Beach | -118.3938557 | 33.8698051 | 6.00 | 4.68 | 1-5% (lowest scores) | No |
| 6061021131 | 5142 | Placer | 95765 | Rocklin | -121.2618313 | 38.803745 | 5.99 | 4.67 | 1-5% (lowest scores) | No |
| 6073017106 | 4973 | San Diego | 92067 | Rancho Santa Fe | -117.2118813 | 33.0198637 | 5.98 | 4.65 | 1-5% (lowest scores) | No |
| 6073019809 | 4005 | San Diego | 92056 | Oceanside | -117.2666754 | 33.1752541 | 5.97 | 4.64 | 1-5% (lowest scores) | No |
| 6097151504 | 3563 | Sonoma | 95405 | Santa Rosa | -122.667742 | 38.436066 | 5.97 | 4.63 | 1-5% (lowest scores) | No |
| 6053012502 | 5082 | Monterey | 93940 | Monterey | -121.9042032 | 36.6114328 | 5.97 | 4.62 | 1-5% (lowest scores) | No |
| 6059062632 | 3979 | Orange | 92651 | Laguna Beach | -117.7443955 | 33.528328 | 5.96 | 4.60 | 1-5% (lowest scores) | No |
| 6001420100 | 2355 | Alameda | 94706 | Albany | -122.2910214 | 37.8947731 | 5.96 | 4.59 | 1-5% (lowest scores) | No |
| 6001408000 | 2671 | Alameda | 94619 | Oakland | -122.1887608 | 37.805237 | 5.94 | 4.58 | 1-5% (lowest scores) | No |
| 6085508203 | 5172 | Santa Clara | 94087 | Sunnyvale | -122.0268266 | 37.3451032 | 5.94 | 4.57 | 1-5% (lowest scores) | No |
| 6041110200 | 5327 | Marin | 94901 | San Rafael | -122.4741961 | 37.9856076 | 5.94 | 4.55 | 1-5% (lowest scores) | No |
| 6055201101 | 1996 | Napa | 94558 | Napa | -122.345438 | 38.3072684 | 5.93 | 4.54 | 1-5% (lowest scores) | No |
| 6083001306 | 3230 | Santa Barbara | 93109 | Santa Barbara | -119.7460689 | 34.4140887 | 5.93 | 4.53 | 1-5% (lowest scores) | No |
| 6075030400 | 5106 | San Francisco | 94116 | San Francisco | -122.4675173 | 37.7469509 | 5.93 | 4.52 | 1-5% (lowest scores) | No |
| 6037620201 | 1530 | Los Angeles | 90266 | Manhattan Beach | -118.4218562 | 33.9033703 | 5.92 | 4.50 | 1-5% (lowest scores) | No |
| 6073017108 | 4658 | San Diego | 92024 | Encinitas | -117.2532768 | 33.0526994 | 5.91 | 4.49 | 1-5% (lowest scores) | No |
| 6041108100 | 6406 | Marin | 94903 | San Rafael | -122.5626533 | 38.017872 | 5.90 | 4.48 | 1-5% (lowest scores) | No |
| 6085502603 | 2527 | Santa Clara | 95008 | Campbell | -121.9272408 | 37.2875614 | 5.89 | 4.46 | 1-5% (lowest scores) | No |
| 6037670202 | 2594 | Los Angeles | 90274 | Palos Verdes Peninsul | -118.357906 | 33.788578 | 5.88 | 4.45 | 1-5% (lowest scores) | No |
| 6059099220 | 5115 | Orange | 92646 | Huntington Beach | -117.9766534 | 33.6444169 | 5.87 | 4.44 | 1-5% (lowest scores) | No |
| 6073009804 | 4773 | San Diego | 92119 | San Diego | -117.0134472 | 32.8085467 | 5.87 | 4.43 | 1-5% (lowest scores) | No |
| 6059099506 | 1253 | Orange | 90742 | Sunset Beach | -118.0760209 | 33.7205507 | 5.87 | 4.41 | 1-5% (lowest scores) | No |
| 6001420600 | 3283 | Alameda | 94706 | Albany | -122.2870621 | 37.8870336 | 5.85 | 4.40 | 1-5% (lowest scores) | No |
| 6081605600 | 5556 | San Mateo | 94010 | Burlingame | -122.3691594 | 37.5649612 | 5.85 | 4.39 | 1-5% (lowest scores) | No |
| 6073017046 | 3678 | San Diego | 92131 | San Diego | -117.0954837 | 32.9193342 | 5.85 | 4.38 | 1-5% (lowest scores) | No |
| 6037621004 | 4762 | Los Angeles | 90254 | Hermosa Beach | -118.4011692 | 33.8703091 | 5.84 | 4.36 | 1-5% (lowest scores) | No |
| 6037901210 | 1591 | Los Angeles | 93532 | Lake Hughes | -118.3864277 | 34.6789981 | 5.83 | 4.35 | 1-5% (lowest scores) | No |
| 6059032044 | 5760 | Orange | 92679 | Trabuco Canyon | -117.5916259 | 33.6153523 | 5.83 | 4.34 | 1-5% (lowest scores) | No |
| 6073006900 | 5148 | San Diego | 92106 | San Diego | -117.2219519 | 32.7430417 | 5.83 | 4.33 | 1-5% (lowest scores) | No |
| 6081603300 | 6404 | San Mateo | 94044 | Pacifica | -122.4857197 | 37.5808674 | 5.82 | 4.31 | 1-5% (lowest scores) | No |
| 6087122202 | 2221 | Santa Cruz | 95003 | Aptos | -121.873767 | 36.9631315 | 5.82 | 4.30 | 1-5% (lowest scores) | No |
| 6059062629 | 2660 | Orange | 92603 | Irvine | -117.8209398 | 33.634782 | 5.82 | 4.29 | 1-5% (lowest scores) | No |
| 6065045608 | 2878 | Riverside | 92253 | La Quinta | -116.2526918 | 33.6381933 | 5.81 | 4.28 | 1-5% (lowest scores) | No |
| 6085508301 | 4410 | Santa Clara | 94087 | Sunnyvale | -122.0571249 | 37.344829 | 5.81 | 4.26 | 1-5% (lowest scores) | No |
| 6085506900 | 7436 | Santa Clara | 95032 | Los Gatos | -121.9321689 | 37.2276327 | 5.79 | 4.25 | 1-5% (lowest scores) | No |
| 6037800330 | 942 | Los Angeles | 91301 | Agoura Hills | -118.738967 | 34.0874944 | 5.78 | 4.24 | 1-5% (lowest scores) | No |
| 6083000400 | 4659 | Santa Barbara | 93101 | Santa Barbara | -119.7101634 | 34.434415 | 5.76 | 4.22 | 1-5% (lowest scores) | No |
| 6081604700 | 2781 | San Mateo | 94030 | Millbrae | -122.4066696 | 37.5936829 | 5.76 | 4.21 | 1-5% (lowest scores) | No |
| 6017030807 | 3986 | El Dorado | 95682 | Shingle Springs | -121.012167 | 38.662649 | 5.75 | 4.20 | 1-5% (lowest scores) | No |
| 6085511500 | 7513 | Santa Clara | 94305 | Stanford | -122.1679203 | 37.4143048 | 5.75 | 4.19 | 1-5% (lowest scores) | No |
| 6085502202 | 2870 | Santa Clara | 95125 | San Jose | -121.9206788 | 37.2980264 | 5.73 | 4.17 | 1-5% (lowest scores) | No |
| 6073007702 | 3849 | San Diego | 92109 | San Diego | -117.2350137 | 32.7898373 | 5.73 | 4.16 | 1-5% (lowest scores) | No |
| 6073021800 | 2022 | San Diego | 92118 | Coronado | -117.1850758 | 32.686581 | 5.73 | 4.15 | 1-5% (lowest scores) | No |
| 6081609603 | 5318 | San Mateo | 94070 | San Carlos | -122.2815708 | 37.4814961 | 5.72 | 4.14 | 1-5% (lowest scores) | No |
| 6087120301 | 5180 | Santa Cruz | 95005 | Ben Lomond | -122.091668 | 37.0994152 | 5.72 | 4.12 | 1-5% (lowest scores) | No |
| 6079011901 | 2987 | San Luis Obispo | 93420 | Arroyo Grande | -120.5776435 | 35.1084099 | 5.71 | 4.11 | 1-5% (lowest scores) | No |
| 6073010800 | 2390 | San Diego | 92118 | Coronado | -117.182643 | 32.6906311 | 5.70 | 4.10 | 1-5% (lowest scores) | No |
| 6067008403 | 5246 | Sacramento | 95630 | Folsom | -121.1676024 | 38.664694 | 5.70 | 4.09 | 1-5% (lowest scores) | No |
| 6075030800 | 5667 | San Francisco | 94127 | San Francisco | -122.4678545 | 37.7391922 | 5.69 | 4.07 | 1-5% (lowest scores) | No |
| 6073009506 | 4258 | San Diego | 92124 | San Diego | -117.0924729 | 32.8247352 | 5.68 | 4.06 | 1-5% (lowest scores) | No |
| 6111007403 | 5585 | Ventura | 91377 | Oak Park | -118.7737939 | 34.1744737 | 5.68 | 4.05 | 1-5% (lowest scores) | No |
| 6065045124 | 1505 | Riverside | 92260 | Palm Desert | -116.428717 | 33.6765145 | 5.67 | 4.04 | 1-5% (lowest scores) | No |
| 6001404200 | 3483 | Alameda | 94611 | Oakland | -122.2344651 | 37.8361078 | 5.66 | 4.02 | 1-5% (lowest scores) | No |
| 6079012600 | 7793 | San Luis Obispo | 93422 | Atascadero | -120.6714705 | 35.4779752 | 5.64 | 4.01 | 1-5% (lowest scores) | No |
| 6067008507 | 3687 | Sacramento | 95630 | Folsom | -121.1293034 | 38.6506226 | 5.63 | 4.00 | 1-5% (lowest scores) | No |
| 6079012505 | 4891 | San Luis Obispo | 93422 | Atascadero | -120.6811592 | 35.5116739 | 5.62 | 3.99 | 1-5% (lowest scores) | No |
| 6037670403 | 2407 | Los Angeles | 90275 | Rancho Palos Verdes | -118.3683615 | 33.7751416 | 5.62 | 3.97 | 1-5% (lowest scores) | No |
| 6001404400 | 5314 | Alameda | 94611 | Oakland | -122.2150894 | 37.8462442 | 5.62 | 3.96 | 1-5% (lowest scores) | No |
| 6073019103 | 6373 | San Diego | 92082 | Valley Center | -117.0811098 | 33.2721347 | 5.60 | 3.95 | 1-5% (lowest scores) | No |
| 6041119202 | 3361 | Marin | 94904 | Greenbrae | -122.5253506 | 37.9505815 | 5.59 | 3.93 | 1-5% (lowest scores) | No |
| 6059075606 | 6941 | Orange | 92705 | Santa Ana | -117.7856521 | 33.7537091 | 5.58 | 3.92 | 1-5% (lowest scores) | No |
| 6041109002 | 3956 | Marin | 94901 | San Rafael | -122.5480916 | 37.9834871 | 5.58 | 3.91 | 1-5% (lowest scores) | No |
| 6083002909 | 5963 | Santa Barbara | 93117 | Goleta | -119.8865542 | 34.4364505 | 5.57 | 3.90 | 1-5% (lowest scores) | No |
| 6059075810 | 3046 | Orange | 92861 | Villa Park | -117.812099 | 33.8106746 | 5.56 | 3.88 | 1-5% (lowest scores) | No |
| 6073017104 | 3907 | San Diego | 92024 | Encinitas | -117.2397938 | 33.0487896 | 5.55 | 3.87 | 1-5% (lowest scores) | No |
| 6061023100 | 6491 | Placer | 95747 | Roseville | -121.331297 | 38.8007142 | 5.55 | 3.86 | 1-5% (lowest scores) | No |
| 6085507500 | 5810 | Santa Clara | 95070 | Saratoga | -122.0239096 | 37.274416 | 5.53 | 3.85 | 1-5% (lowest scores) | No |
| 6013338302 | 5807 | Contra Costa | 94598 | Walnut Creek | -122.0145836 | 37.9067555 | 5.52 | 3.83 | 1-5% (lowest scores) | No |
| 6001426200 | 4745 | Alameda | 94611 | Oakland | -122.2406227 | 37.824626 | 5.52 | 3.82 | 1-5% (lowest scores) | No |
| 6055200703 | 3047 | Napa | 94558 | Napa | -122.3294424 | 38.3098473 | 5.50 | 3.81 | 1-5% (lowest scores) | No |
| 6073008003 | 3334 | San Diego | 92109 | San Diego | -117.254695 | 32.8047692 | 5.50 | 3.80 | 1-5% (lowest scores) | No |
| 6061020604 | 5589 | Placer | 95746 | Granite Bay | -121.2003901 | 38.7553138 | 5.48 | 3.78 | 1-5% (lowest scores) | No |
| 6059032032 | 3075 | Orange | 92691 | Mission Viejo | -117.6565092 | 33.6322217 | 5.48 | 3.77 | 1-5% (lowest scores) | No |
| 6097153807 | 3861 | Sonoma | 95448 | Healdsburg | -122.7450282 | 38.5679564 | 5.45 | 3.76 | 1-5% (lowest scores) | No |
| 6075012601 | 2329 | San Francisco | 94123 | San Francisco | -122.4391478 | 37.8022695 | 5.44 | 3.75 | 1-5% (lowest scores) | No |
| 6079011800 | 7138 | San Luis Obispo | 93420 | Arroyo Grande | -120.5681372 | 35.1292608 | 5.42 | 3.73 | 1-5% (lowest scores) | No |
| 6037670407 | 5758 | Los Angeles | 90275 | Rancho Palos Verdes | -118.3868772 | 33.773572 | 5.41 | 3.72 | 1-5% (lowest scores) | No |
| 6041120000 | 6027 | Marin | 94939 | Larkspur | -122.5372766 | 37.9354506 | 5.41 | 3.71 | 1-5% (lowest scores) | No |
| 6013390200 | 1719 | Contra Costa | 94530 | El Cerrito | -122.2911825 | 37.9045535 | 5.41 | 3.70 | 1-5% (lowest scores) | No |
| 6081613300 | 2723 | San Mateo | 94062 | Redwood City | -122.2487924 | 37.4403446 | 5.40 | 3.68 | 1-5% (lowest scores) | No |
| 6075030500 | 3046 | San Francisco | 94131 | San Francisco | -122.4517871 | 37.7523832 | 5.40 | 3.67 | 1-5% (lowest scores) | No |
| 6081613000 | 3386 | San Mateo | 94025 | Menlo Park | -122.20315 | 37.4227203 | 5.40 | 3.66 | 1-5% (lowest scores) | No |
| 6037670324 | 5127 | Los Angeles | 90274 | Palos Verdes Peninsul | -118.383478 | 33.7977558 | 5.37 | 3.64 | 1-5% (lowest scores) | No |
| 6085502907 | 3912 | Santa Clara | 95118 | San Jose | -121.8972821 | 37.2633246 | 5.37 | 3.63 | 1-5% (lowest scores) | No |
| 6085509600 | 2625 | Santa Clara | 94041 | Mountain View | -122.0804482 | 37.3908176 | 5.36 | 3.62 | 1-5% (lowest scores) | No |
| 6055201402 | 2871 | Napa | 94558 | Napa | -122.2248403 | 38.3226754 | 5.36 | 3.61 | 1-5% (lowest scores) | No |
| 6059062701 | 2800 | Orange | 92625 | Corona del Mar | -117.8809155 | 33.6048432 | 5.35 | 3.59 | 1-5% (lowest scores) | No |
| 6075012800 | 4106 | San Francisco | 94123 | San Francisco | -122.4417466 | 37.7978099 | 5.35 | 3.58 | 1-5% (lowest scores) | No |
| 6037262604 | 6092 | Los Angeles | 90272 | Pacific Palisades | -118.5485779 | 34.0511084 | 5.34 | 3.57 | 1-5% (lowest scores) | No |
| 6037651201 | 5056 | Los Angeles | 90505 | Torrance | -118.367527 | 33.8209956 | 5.34 | 3.56 | 1-5% (lowest scores) | No |
| 6059042305 | 3432 | Orange | 92651 | Laguna Beach | -117.7424655 | 33.4991773 | 5.34 | 3.54 | 1-5% (lowest scores) | No |
| 6075012602 | 2909 | San Francisco | 94123 | San Francisco | -122.4356807 | 37.806476 | 5.33 | 3.53 | 1-5% (lowest scores) | No |
| 6097152202 | 6763 | Sonoma | 95409 | Santa Rosa | -122.6753429 | 38.4670566 | 5.33 | 3.52 | 1-5% (lowest scores) | No |
| 6073017050 | 3068 | San Diego | 92128 | San Diego | -117.0776875 | 32.9618675 | 5.32 | 3.51 | 1-5% (lowest scores) | No |
| 6081603400 | 5483 | San Mateo | 94044 | Pacifica | -122.4626241 | 37.5946374 | 5.32 | 3.49 | 1-5% (lowest scores) | No |
| 6037262301 | 2744 | Los Angeles | 90049 | Los Angeles | -118.4912444 | 34.0918293 | 5.29 | 3.48 | 1-5% (lowest scores) | No |
| 6081611100 | 5913 | San Mateo | 94061 | Redwood City | -122.2524753 | 37.4580008 | 5.29 | 3.47 | 1-5% (lowest scores) | No |
| 6111007506 | 7514 | Ventura | 93065 | Simi Valley | -118.7737363 | 34.2261536 | 5.28 | 3.46 | 1-5% (lowest scores) | No |
| 6083002009 | 3826 | Santa Barbara | 93455 | Santa Maria | -120.4277159 | 34.8722878 | 5.28 | 3.44 | 1-5% (lowest scores) | No |
| 6065045114 | 1939 | Riverside | 92260 | Palm Desert | -116.3865775 | 33.694826 | 5.26 | 3.43 | 1-5% (lowest scores) | No |
| 6061021035 | 7431 | Placer | 95747 | Roseville | -121.3450222 | 38.7598403 | 5.26 | 3.42 | 1-5% (lowest scores) | No |
| 6075021100 | 3853 | San Francisco | 94114 | San Francisco | -122.4298144 | 37.75397 | 5.26 | 3.41 | 1-5% (lowest scores) | No |
| 6085506604 | 7324 | Santa Clara | 95130 | San Jose | -121.9867326 | 37.2807949 | 5.24 | 3.39 | 1-5% (lowest scores) | No |
| 6059075809 | 3023 | Orange | 92861 | Villa Park | -117.8092479 | 33.8222704 | 5.24 | 3.38 | 1-5% (lowest scores) | No |
| 6001450604 | 4796 | Alameda | 94566 | Pleasanton | -121.8865529 | 37.6811899 | 5.24 | 3.37 | 1-5% (lowest scores) | No |
| 6075017101 | 3544 | San Francisco | 94117 | San Francisco | -122.4460837 | 37.7657245 | 5.23 | 3.35 | 1-5% (lowest scores) | No |
| 6059032031 | 3654 | Orange | 92691 | Mission Viejo | -117.6494963 | 33.6443064 | 5.22 | 3.34 | 1-5% (lowest scores) | No |
| 6067008209 | 4085 | Sacramento | 95630 | Folsom | -121.1856973 | 38.6875399 | 5.21 | 3.33 | 1-5% (lowest scores) | No |
| 6085511800 | 4009 | Santa Clara | 95033 | Los Gatos | -121.9287007 | 37.1484376 | 5.21 | 3.32 | 1-5% (lowest scores) | No |
| 6111005802 | 9090 | Ventura | 91320 | Newbury Park | -118.9727464 | 34.1780435 | 5.16 | 3.30 | 1-5% (lowest scores) | No |
| 6081611600 | 2262 | San Mateo | 94025 | Menlo Park | -122.1706821 | 37.4747978 | 5.16 | 3.29 | 1-5% (lowest scores) | No |
| 6037621102 | 2883 | Los Angeles | 90254 | Hermosa Beach | -118.3883787 | 33.8600257 | 5.15 | 3.28 | 1-5% (lowest scores) | No |
| 6059032048 | 5590 | Orange | 92692 | Mission Viejo | -117.6288774 | 33.651777 | 5.15 | 3.27 | 1-5% (lowest scores) | No |
| 6075030700 | 6343 | San Francisco | 94127 | San Francisco | -122.4503095 | 37.7372232 | 5.13 | 3.25 | 1-5% (lowest scores) | No |
| 6075021500 | 5096 | San Francisco | 94131 | San Francisco | -122.426705 | 37.7450512 | 5.13 | 3.24 | 1-5% (lowest scores) | No |
| 6041103100 | 7168 | Marin | 94947 | Novato | -122.6416644 | 38.1145306 | 5.12 | 3.23 | 1-5% (lowest scores) | No |
| 6013343003 | 3843 | Contra Costa | 94596 | Walnut Creek | -122.0291114 | 37.8863578 | 5.09 | 3.22 | 1-5% (lowest scores) | No |
| 6085511907 | 3988 | Santa Clara | 95120 | San Jose | -121.8542523 | 37.2197661 | 5.08 | 3.20 | 1-5% (lowest scores) | No |
| 6061022014 | 1736 | Placer | 95724 | Norden | -120.3619496 | 39.2581988 | 5.07 | 3.19 | 1-5% (lowest scores) | No |
| 6053011000 | 5933 | Monterey | 93924 | Carmel Valley | -121.6806215 | 36.3913637 | 5.06 | 3.18 | 1-5% (lowest scores) | No |
| 6067008510 | 4744 | Sacramento | 95630 | Folsom | -121.1202103 | 38.6654891 | 5.05 | 3.17 | 1-5% (lowest scores) | No |
| 6017030808 | 6897 | El Dorado | 95762 | El Dorado Hills | -121.0086199 | 38.67665 | 5.04 | 3.15 | 1-5% (lowest scores) | No |
| 6075030102 | 4838 | San Francisco | 94131 | San Francisco | -122.4580012 | 37.7594542 | 5.03 | 3.14 | 1-5% (lowest scores) | No |
| 6079010701 | 4650 | San Luis Obispo | 93402 | Los Osos | -120.833076 | 35.327091 | 5.03 | 3.13 | 1-5% (lowest scores) | No |
| 6073017053 | 3364 | San Diego | 92064 | Poway | -117.0315378 | 33.0012075 | 5.01 | 3.12 | 1-5% (lowest scores) | No |
| 6061020601 | 6911 | Placer | 95746 | Granite Bay | -121.135857 | 38.7669083 | 4.98 | 3.10 | 1-5% (lowest scores) | No |
| 6041124200 | 5626 | Marin | 94920 | Belvedere Tiburon | -122.4494238 | 37.8785872 | 4.95 | 3.09 | 1-5% (lowest scores) | No |
| 6073008327 | 5775 | San Diego | 92130 | San Diego | -117.2420969 | 32.9677976 | 4.93 | 3.08 | 1-5% (lowest scores) | No |
| 6087121000 | 3423 | Santa Cruz | 95033 | Los Gatos | -121.9115725 | 37.0900016 | 4.91 | 3.06 | 1-5% (lowest scores) | No |
| 6057000102 | 6677 | Nevada | 95949 | Grass Valley | -121.0499715 | 39.124831 | 4.90 | 3.05 | 1-5% (lowest scores) | No |
| 6059032038 | 6602 | Orange | 92692 | Mission Viejo | -117.6450407 | 33.5941166 | 4.89 | 3.04 | 1-5% (lowest scores) | No |
| 6065044922 | 3494 | Riverside | 92211 | Palm Desert | -116.3592093 | 33.7786347 | 4.88 | 3.03 | 1-5% (lowest scores) | No |
| 6073007907 | 3048 | San Diego | 92109 | San Diego | -117.2417581 | 32.7965191 | 4.87 | 3.01 | 1-5% (lowest scores) | No |
| 6037137504 | 1939 | Los Angeles | 91364 | Woodland Hills | -118.5720594 | 34.1480383 | 4.85 | 3.00 | 1-5% (lowest scores) | No |
| 6059062702 | 4713 | Orange | 92625 | Corona del Mar | -117.8701726 | 33.5927639 | 4.85 | 2.99 | 1-5% (lowest scores) | No |
| 6059062620 | 5065 | Orange | 92651 | Laguna Beach | -117.762964 | 33.5306175 | 4.84 | 2.98 | 1-5% (lowest scores) | No |
| 6041132200 | 1774 | Marin | 94956 | Point Reyes Station | -122.8602138 | 38.052907 | 4.83 | 2.96 | 1-5% (lowest scores) | No |
| 6075013200 | 4162 | San Francisco | 94115 | San Francisco | -122.4387455 | 37.7936676 | 4.83 | 2.95 | 1-5% (lowest scores) | No |
| 6087122001 | 4909 | Santa Cruz | 95003 | Aptos | -121.9240389 | 37.0237015 | 4.81 | 2.94 | 1-5% (lowest scores) | No |
| 6111007406 | 2377 | Ventura | 91377 | Oak Park | -118.7764684 | 34.1918776 | 4.81 | 2.93 | 1-5% (lowest scores) | No |
| 6037800506 | 3074 | Los Angeles | 90265 | Malibu | -118.6049503 | 34.0516505 | 4.80 | 2.91 | 1-5% (lowest scores) | No |
| 6089011701 | 2240 | Shasta | 96019 | Shasta Lake | -122.3597887 | 40.6628518 | 4.79 | 2.90 | 1-5% (lowest scores) | No |
| 6085511912 | 5440 | Santa Clara | 95120 | San Jose | -121.8341798 | 37.2057405 | 4.79 | 2.89 | 1-5% (lowest scores) | No |
| 6037920111 | 3246 | Los Angeles | 91354 | Valencia | -118.538453 | 34.4524039 | 4.78 | 2.88 | 1-5% (lowest scores) | No |
| 6073007910 | 2797 | San Diego | 92109 | San Diego | -117.2539836 | 32.7943988 | 4.78 | 2.86 | 1-5% (lowest scores) | No |
| 6073010900 | 1750 | San Diego | 92118 | Coronado | -117.1703733 | 32.6854276 | 4.77 | 2.85 | 1-5% (lowest scores) | No |
| 6073008337 | 4316 | San Diego | 92129 | San Diego | -117.1357871 | 32.9583944 | 4.76 | 2.84 | 1-5% (lowest scores) | No |
| 6041128200 | 4582 | Marin | 94941 | Mill Valley | -122.5502453 | 37.8915878 | 4.75 | 2.83 | 1-5% (lowest scores) | No |
| 6061023500 | 5159 | Placer | 95648 | Lincoln | -121.2864775 | 38.8474985 | 4.75 | 2.81 | 1-5% (lowest scores) | No |
| 6085511400 | 3639 | Santa Clara | 94301 | Palo Alto | -122.1435946 | 37.4359497 | 4.73 | 2.80 | 1-5% (lowest scores) | No |
| 6041107000 | 6142 | Marin | 94903 | San Rafael | -122.5839902 | 38.0386059 | 4.73 | 2.79 | 1-5% (lowest scores) | No |
| 6013321103 | 4518 | Contra Costa | 94553 | Martinez | -122.1124879 | 37.9702795 | 4.72 | 2.77 | 1-5% (lowest scores) | No |
| 6073011100 | 3698 | San Diego | 92118 | Coronado | -117.1785782 | 32.6973819 | 4.71 | 2.76 | 1-5% (lowest scores) | No |
| 6055201102 | 2055 | Napa | 94559 | Napa | -122.3831025 | 38.2921654 | 4.70 | 2.75 | 1-5% (lowest scores) | No |
| 6037262302 | 2818 | Los Angeles | 90049 | Los Angeles | -118.4768353 | 34.0751025 | 4.70 | 2.74 | 1-5% (lowest scores) | No |
| 6037670413 | 4782 | Los Angeles | 90275 | Rancho Palos Verdes | -118.3974684 | 33.7725815 | 4.67 | 2.72 | 1-5% (lowest scores) | No |
| 6059021920 | 6892 | Orange | 92807 | Anaheim | -117.7654493 | 33.8356458 | 4.67 | 2.71 | 1-5% (lowest scores) | No |
| 6073010601 | 2127 | San Diego | 92118 | Coronado | -117.1291938 | 32.623646 | 4.67 | 2.70 | 1-5% (lowest scores) | No |
| 6081612800 | 3296 | San Mateo | 94025 | Menlo Park | -122.1923317 | 37.4364399 | 4.67 | 2.69 | 1-5% (lowest scores) | No |
| 6081609900 | 2944 | San Mateo | 94062 | Redwood City | -122.247959 | 37.4800486 | 4.66 | 2.67 | 1-5% (lowest scores) | No |
| 6081609400 | 3278 | San Mateo | 94070 | San Carlos | -122.2631052 | 37.4946099 | 4.65 | 2.66 | 1-5% (lowest scores) | No |
| 6061021309 | 9552 | Placer | 95765 | Rocklin | -121.2796761 | 38.8268169 | 4.65 | 2.65 | 1-5% (lowest scores) | No |
| 6037670602 | 7345 | Los Angeles | 90275 | Rancho Palos Verdes | -118.3696354 | 33.74354 | 4.65 | 2.64 | 1-5% (lowest scores) | No |
| 6001421500 | 3640 | Alameda | 94708 | Berkeley | -122.2590314 | 37.8920346 | 4.62 | 2.62 | 1-5% (lowest scores) | No |
| 6001404300 | 3218 | Alameda | 94618 | Oakland | -122.2381008 | 37.8451917 | 4.61 | 2.61 | 1-5% (lowest scores) | No |
| 6019005520 | 2698 | Fresno | 93619 | Clovis | -119.6660507 | 36.8592093 | 4.61 | 2.60 | 1-5% (lowest scores) | No |
| 6075021300 | 2474 | San Francisco | 94114 | San Francisco | -122.4384676 | 37.7492646 | 4.61 | 2.59 | 1-5% (lowest scores) | No |
| 6037670405 | 2646 | Los Angeles | 90275 | Rancho Palos Verdes | -118.3748916 | 33.7671014 | 4.60 | 2.57 | 1-5% (lowest scores) | No |
| 6081610303 | 7336 | San Mateo | 94065 | Redwood City | -122.2418801 | 37.5432736 | 4.58 | 2.56 | 1-5% (lowest scores) | No |
| 6041117000 | 4527 | Marin | 94960 | San Anselmo | -122.5641105 | 37.9746108 | 4.57 | 2.55 | 1-5% (lowest scores) | No |
| 6059042111 | 5994 | Orange | 92673 | San Clemente | -117.6277736 | 33.4663648 | 4.56 | 2.53 | 1-5% (lowest scores) | No |
| 6085511913 | 4295 | Santa Clara | 95120 | San Jose | -121.8912127 | 37.2275236 | 4.53 | 2.52 | 1-5% (lowest scores) | No |
| 6037620301 | 4657 | Los Angeles | 90266 | Manhattan Beach | -118.4050812 | 33.8984626 | 4.53 | 2.51 | 1-5% (lowest scores) | No |

| | | | | | | | | | |
|---|---|---|---|---|---|---|---|---|---|
| 6041128100 | 6505 | Marin | 94941 | Mill Valley | -122.5317487 | 37.8717847 | 4.52 | 2.50 | 1-5% (lowest scores) |
| 6085510002 | 3553 | Santa Clara | 94024 | Los Altos | -122.071847 | 37.3465927 | 4.52 | 2.48 | 1-5% (lowest scores) |
| 6065045115 | 2026 | Riverside | 92260 | Palm Desert | -116.3871379 | 33.7048238 | 4.51 | 2.47 | 1-5% (lowest scores) |
| 6059032046 | 6005 | Orange | 92679 | Trabuco Canyon | -117.58352 | 33.5764329 | 4.51 | 2.46 | 1-5% (lowest scores) |
| 6013345103 | 5062 | Contra Costa | 94583 | San Ramon | -121.9283939 | 37.738748 | 4.49 | 2.45 | 1-5% (lowest scores) |
| 6001404501 | 1677 | Alameda | 94611 | Oakland | -122.2171515 | 37.8271275 | 4.49 | 2.43 | 1-5% (lowest scores) |
| 6085507100 | 2683 | Santa Clara | 95032 | Los Gatos | -121.9735787 | 37.2380768 | 4.46 | 2.42 | 1-5% (lowest scores) |
| 6083002010 | 4375 | Santa Barbara | 93455 | Santa Maria | -120.4100285 | 34.8714281 | 4.45 | 2.41 | 1-5% (lowest scores) |
| 6085507808 | 5508 | Santa Clara | 95014 | Cupertino | -122.0379145 | 37.3022842 | 4.42 | 2.40 | 1-5% (lowest scores) |
| 6073008301 | 3094 | San Diego | 92109 | San Diego | -117.2324258 | 32.81621 | 4.38 | 2.38 | 1-5% (lowest scores) |
| 6081609700 | 4386 | San Mateo | 94062 | Redwood City | -122.2802889 | 37.468165 | 4.36 | 2.37 | 1-5% (lowest scores) |
| 6017031800 | 6798 | El Dorado | 95762 | El Dorado Hills | -121.0483699 | 38.6670529 | 4.34 | 2.36 | 1-5% (lowest scores) |
| 6001404502 | 5784 | Alameda | 94611 | Oakland | -122.2026154 | 37.8345259 | 4.32 | 2.35 | 1-5% (lowest scores) |
| 6013345114 | 6307 | Contra Costa | 94526 | Danville | -121.9650943 | 37.7992823 | 4.30 | 2.33 | 1-5% (lowest scores) |
| 6075020600 | 4711 | San Francisco | 94114 | San Francisco | -122.4303496 | 37.7595628 | 4.30 | 2.32 | 1-5% (lowest scores) |
| 6061021123 | 7397 | Placer | 95765 | Rocklin | -121.2249758 | 38.8481243 | 4.29 | 2.31 | 1-5% (lowest scores) |
| 6053013200 | 4225 | Monterey | 93923 | Carmel | -121.8059271 | 36.5623469 | 4.28 | 2.30 | 1-5% (lowest scores) |
| 6037620305 | 6227 | Los Angeles | 90266 | Manhattan Beach | -118.4171775 | 33.8933341 | 4.28 | 2.28 | 1-5% (lowest scores) |
| 6075021200 | 2779 | San Francisco | 94114 | San Francisco | -122.4381261 | 37.7531762 | 4.27 | 2.27 | 1-5% (lowest scores) |
| 6085511707 | 3009 | Santa Clara | 95014 | Cupertino | -122.1195977 | 37.292652 | 4.27 | 2.26 | 1-5% (lowest scores) |
| 6075021800 | 3840 | San Francisco | 94131 | San Francisco | -122.4290987 | 37.737952 | 4.26 | 2.24 | 1-5% (lowest scores) |
| 6013345203 | 6472 | Contra Costa | 94526 | Danville | -122.0221467 | 37.8050946 | 4.23 | 2.23 | 1-5% (lowest scores) |
| 6073017033 | 4694 | San Diego | 92129 | San Diego | -117.1150623 | 32.9800714 | 4.23 | 2.22 | 1-5% (lowest scores) |
| 6081612900 | 4356 | San Mateo | 94025 | Menlo Park | -122.2036897 | 37.4321641 | 4.22 | 2.21 | 1-5% (lowest scores) |
| 6085510200 | 4328 | Santa Clara | 94024 | Los Altos | -122.1018082 | 37.3719046 | 4.22 | 2.19 | 1-5% (lowest scores) |
| 6087100100 | 2163 | Santa Cruz | 95065 | Santa Cruz | -121.9990254 | 36.9957924 | 4.22 | 2.18 | 1-5% (lowest scores) |
| 6059062635 | 4039 | Orange | 92656 | Aliso Viejo | -117.738192 | 33.6011253 | 4.21 | 2.17 | 1-5% (lowest scores) |
| 6041132100 | 2311 | Marin | 94970 | Stinson Beach | -122.6761173 | 37.9248161 | 4.20 | 2.16 | 1-5% (lowest scores) |
| 6017030706 | 6020 | El Dorado | 95762 | El Dorado Hills | -121.086335 | 38.6722167 | 4.19 | 2.14 | 1-5% (lowest scores) |
| 6083000502 | 5874 | Santa Barbara | 93105 | Santa Barbara | -119.7296812 | 34.4449009 | 4.18 | 2.13 | 1-5% (lowest scores) |
| 6085507001 | 6504 | Santa Clara | 95030 | Los Gatos | -121.9934281 | 37.2212376 | 4.17 | 2.12 | 1-5% (lowest scores) |
| 6059042336 | 4430 | Orange | 92677 | Laguna Niguel | -117.6966091 | 33.5469795 | 4.17 | 2.11 | 1-5% (lowest scores) |
| 6061021106 | 2230 | Placer | 95677 | Rocklin | -121.250877 | 38.7965217 | 4.15 | 2.09 | 1-5% (lowest scores) |
| 6001430102 | 2285 | Alameda | 94546 | Castro Valley | -122.0747102 | 37.7726562 | 4.13 | 2.08 | 1-5% (lowest scores) |
| 6085508403 | 2817 | Santa Clara | 94087 | Sunnyvale | -122.0415383 | 37.3556392 | 4.11 | 2.07 | 1-5% (lowest scores) |
| 6059042319 | 3334 | Orange | 92677 | Laguna Niguel | -117.7094915 | 33.5354152 | 4.10 | 2.06 | 1-5% (lowest scores) |
| 6053012401 | 1682 | Monterey | 93950 | Pacific Grove | -121.9104587 | 36.6221465 | 4.10 | 2.04 | 1-5% (lowest scores) |
| 6073008303 | 3446 | San Diego | 92037 | La Jolla | -117.2571877 | 32.8407682 | 4.10 | 2.03 | 1-5% (lowest scores) |
| 6087122002 | 3349 | Santa Cruz | 95003 | Aptos | -121.8654863 | 37.0227547 | 4.09 | 2.02 | 1-5% (lowest scores) |
| 6059032050 | 4906 | Orange | 92688 | Rancho Santa Margar | -117.5959073 | 33.6493352 | 4.05 | 2.01 | 1-5% (lowest scores) |
| 6067008509 | 4711 | Sacramento | 95630 | Folsom | -121.1230683 | 38.6779296 | 4.05 | 1.99 | 1-5% (lowest scores) |
| 6067008501 | 6228 | Sacramento | 95630 | Folsom | -121.1301153 | 38.6960099 | 4.04 | 1.98 | 1-5% (lowest scores) |
| 6013355112 | 5563 | Contra Costa | 94513 | Brentwood | -121.797346 | 37.8328349 | 4.04 | 1.97 | 1-5% (lowest scores) |
| 6065045123 | 2356 | Riverside | 92210 | Indian Wells | -116.3498865 | 33.7257343 | 4.04 | 1.95 | 1-5% (lowest scores) |
| 6089011402 | 3350 | Shasta | 96002 | Redding | -122.3229123 | 40.5431529 | 4.03 | 1.94 | 1-5% (lowest scores) |
| 6041116000 | 3070 | Marin | 94960 | San Anselmo | -122.5758726 | 37.9796411 | 4.03 | 1.93 | 1-5% (lowest scores) |
| 6059032045 | 2978 | Orange | 92679 | Trabuco Canyon | -117.5985167 | 33.5817672 | 4.01 | 1.92 | 1-5% (lowest scores) |
| 6073021500 | 8846 | San Diego | 92130 | San Diego | -117.1889651 | 32.9511062 | 4.00 | 1.90 | 1-5% (lowest scores) |
| 6059062631 | 3303 | Orange | 92603 | Irvine | -117.8123266 | 33.6401283 | 3.98 | 1.89 | 1-5% (lowest scores) |
| 6073008311 | 2884 | San Diego | 92037 | La Jolla | -117.2633257 | 32.8253212 | 3.97 | 1.88 | 1-5% (lowest scores) |
| 6001400100 | 2937 | Alameda | 94704 | Berkeley | -122.2319033 | 37.8675947 | 3.97 | 1.87 | 1-5% (lowest scores) |
| 6037670328 | 4504 | Los Angeles | 90274 | Palos Verdes Peninsul | -118.4179511 | 33.7724316 | 3.93 | 1.85 | 1-5% (lowest scores) |
| 6075030600 | 2221 | San Francisco | 94127 | San Francisco | -122.4571446 | 37.743754 | 3.92 | 1.84 | 1-5% (lowest scores) |
| 6041115000 | 7249 | Marin | 94960 | San Anselmo | -122.5831555 | 38.0056961 | 3.92 | 1.83 | 1-5% (lowest scores) |
| 6013351101 | 2594 | Contra Costa | 94595 | Walnut Creek | -122.0659799 | 37.8531059 | 3.91 | 1.82 | 1-5% (lowest scores) |
| 6001423800 | 2925 | Alameda | 94705 | Berkeley | -122.2441385 | 37.8547587 | 3.90 | 1.80 | 1-5% (lowest scores) |
| 6001421300 | 3844 | Alameda | 94707 | Berkeley | -122.2813663 | 37.8911093 | 3.90 | 1.79 | 1-5% (lowest scores) |
| 6017031405 | 2426 | El Dorado | 95726 | Pollock Pines | -120.6258013 | 38.7330245 | 3.89 | 1.78 | 1-5% (lowest scores) |
| 6073008365 | 2979 | San Diego | 92129 | San Diego | -117.144382 | 32.9411064 | 3.87 | 1.77 | 1-5% (lowest scores) |
| 6085509901 | 1934 | Santa Clara | 94040 | Mountain View | -122.0863447 | 37.3695442 | 3.86 | 1.75 | 1-5% (lowest scores) |
| 6017030701 | 6205 | El Dorado | 95762 | El Dorado Hills | -121.0874235 | 38.737015 | 3.86 | 1.74 | 1-5% (lowest scores) |
| 6085511701 | 4017 | Santa Clara | 94022 | Los Altos | -122.1318447 | 37.3782554 | 3.86 | 1.73 | 1-5% (lowest scores) |
| 6041114100 | 5133 | Marin | 94930 | Fairfax | -122.5941051 | 37.9762769 | 3.85 | 1.72 | 1-5% (lowest scores) |
| 6059032059 | 7975 | Orange | 92694 | Ladera Ranch | -117.638277 | 33.5521436 | 3.84 | 1.70 | 1-5% (lowest scores) |
| 6053012800 | 5154 | Monterey | 93940 | Monterey | -121.9095446 | 36.5895988 | 3.84 | 1.69 | 1-5% (lowest scores) |
| 6085507206 | 2724 | Santa Clara | 95030 | Los Gatos | -121.9857093 | 37.2435393 | 3.83 | 1.68 | 1-5% (lowest scores) |
| 6067008505 | 2186 | Sacramento | 95630 | Folsom | -121.1454813 | 38.6632674 | 3.82 | 1.66 | 1-5% (lowest scores) |
| 6073017021 | 3177 | San Diego | 92065 | Ramona | -116.9890364 | 33.0040421 | 3.77 | 1.65 | 1-5% (lowest scores) |
| 6081608800 | 5696 | San Mateo | 94002 | Belmont | -122.3110298 | 37.5166078 | 3.77 | 1.64 | 1-5% (lowest scores) |
| 6083002915 | 580 | Santa Barbara | 93117 | Goleta | -119.8811091 | 34.4174077 | 3.76 | 1.63 | 1-5% (lowest scores) |
| 6013350000 | 5512 | Contra Costa | 94549 | Lafayette | -122.1364828 | 37.879801 | 3.74 | 1.61 | 1-5% (lowest scores) |
| 6073017006 | 2876 | San Diego | 92064 | Poway | -117.0488065 | 33.0121262 | 3.73 | 1.60 | 1-5% (lowest scores) |
| 6013355117 | 8379 | Contra Costa | 94582 | San Ramon | -121.8968502 | 37.7460371 | 3.72 | 1.59 | 1-5% (lowest scores) |
| 6037620901 | 2621 | Los Angeles | 90266 | Manhattan Beach | -118.4003277 | 33.8828078 | 3.72 | 1.58 | 1-5% (lowest scores) |
| 6073017501 | 2769 | San Diego | 92024 | Encinitas | -117.2920275 | 33.0402437 | 3.72 | 1.56 | 1-5% (lowest scores) |
| 6059032043 | 3987 | Orange | 92675 | San Juan Capistrano | -117.5673455 | 33.6311195 | 3.70 | 1.55 | 1-5% (lowest scores) |
| 6037670500 | 1860 | Los Angeles | 90274 | Palos Verdes Peninsul | -118.347163 | 33.7600134 | 3.69 | 1.54 | 1-5% (lowest scores) |
| 6073017306 | 2818 | San Diego | 92014 | Del Mar | -117.2402519 | 32.989035 | 3.69 | 1.53 | 1-5% (lowest scores) |
| 6073017107 | 2871 | San Diego | 92024 | Encinitas | -117.251696 | 33.0624939 | 3.68 | 1.51 | 1-5% (lowest scores) |
| 6075021400 | 3264 | San Francisco | 94114 | San Francisco | -122.4294049 | 37.7495758 | 3.67 | 1.50 | 1-5% (lowest scores) |
| 6085508303 | 2562 | Santa Clara | 94087 | Sunnyvale | -122.0458424 | 37.3448815 | 3.65 | 1.49 | 1-5% (lowest scores) |
| 6073017044 | 5570 | San Diego | 92131 | San Diego | -117.0805415 | 32.9270444 | 3.60 | 1.48 | 1-5% (lowest scores) |
| 6067008512 | 3819 | Sacramento | 95630 | Folsom | -121.1025625 | 38.6698999 | 3.57 | 1.46 | 1-5% (lowest scores) |
| 6053013400 | 1624 | Monterey | 93940 | Monterey | -121.8297974 | 36.5825013 | 3.56 | 1.45 | 1-5% (lowest scores) |
| 6041118100 | 2407 | Marin | 94960 | San Anselmo | -122.5616009 | 37.9636753 | 3.55 | 1.44 | 1-5% (lowest scores) |
| 6013346203 | 3838 | Contra Costa | 94526 | Danville | -121.9862797 | 37.8199841 | 3.55 | 1.43 | 1-5% (lowest scores) |
| 6085510500 | 4688 | Santa Clara | 94022 | Los Altos | -122.120112 | 37.3927828 | 3.53 | 1.41 | 1-5% (lowest scores) |
| 6075020500 | 2583 | San Francisco | 94114 | San Francisco | -122.4370296 | 37.7591285 | 3.50 | 1.40 | 1-5% (lowest scores) |
| 6073008006 | 3805 | San Diego | 92037 | La Jolla | -117.2628601 | 32.8086093 | 3.49 | 1.39 | 1-5% (lowest scores) |
| 6057001205 | 4537 | Nevada | 96161 | Truckee | -120.1090918 | 39.342348 | 3.48 | 1.37 | 1-5% (lowest scores) |
| 6087122203 | 3622 | Santa Cruz | 95003 | Aptos | -121.8784677 | 36.9574068 | 3.46 | 1.36 | 1-5% (lowest scores) |
| 6085511705 | 995 | Santa Clara | 94304 | Palo Alto | -122.1620848 | 37.4055527 | 3.46 | 1.35 | 1-5% (lowest scores) |
| 6053012000 | 3563 | Monterey | 93950 | Pacific Grove | -121.926271 | 36.6028686 | 3.44 | 1.34 | 1-5% (lowest scores) |
| 6079010404 | 2249 | San Luis Obispo | 93428 | Cambria | -121.0973548 | 35.5799023 | 3.43 | 1.32 | 1-5% (lowest scores) |
| 6013326000 | 3437 | Contra Costa | 94523 | Pleasant Hill | -122.0885363 | 37.9372675 | 3.40 | 1.31 | 1-5% (lowest scores) |
| 6081609800 | 4492 | San Mateo | 94062 | Redwood City | -122.2530388 | 37.4721968 | 3.40 | 1.30 | 1-5% (lowest scores) |
| 6061021204 | 2482 | Placer | 95663 | Penryn | -121.1915419 | 38.8663777 | 3.36 | 1.29 | 1-5% (lowest scores) |
| 6037920032 | 2897 | Los Angeles | 91390 | Santa Clarita | -118.467462 | 34.4580131 | 3.35 | 1.27 | 1-5% (lowest scores) |
| 6013345112 | 6513 | Contra Costa | 94582 | San Ramon | -121.9274296 | 37.7614431 | 3.35 | 1.26 | 1-5% (lowest scores) |
| 6085510802 | 1840 | Santa Clara | 94306 | Palo Alto | -122.1103938 | 37.4144214 | 3.34 | 1.25 | 1-5% (lowest scores) |
| 6037670406 | 1903 | Los Angeles | 90274 | Palos Verdes Peninsul | -118.3853116 | 33.763048 | 3.33 | 1.24 | 1-5% (lowest scores) |
| 6059063008 | 857 | Orange | 92660 | Newport Beach | -117.8780201 | 33.6149301 | 3.31 | 1.22 | 1-5% (lowest scores) |
| 6097153502 | 3684 | Sonoma | 94952 | Petaluma | -122.8783675 | 38.335159 | 3.29 | 1.21 | 1-5% (lowest scores) |
| 6053012402 | 2987 | Monterey | 93950 | Pacific Grove | -121.9316658 | 36.627781 | 3.29 | 1.20 | 1-5% (lowest scores) |
| 6053010702 | 3911 | Monterey | 93908 | Salinas | -121.6316313 | 36.5436798 | 3.29 | 1.19 | 1-5% (lowest scores) |
| 6061022011 | 1686 | Placer | 96161 | Truckee | -120.130439 | 39.2756925 | 3.28 | 1.17 | 1-5% (lowest scores) |
| 6081605700 | 5273 | San Mateo | 94010 | Burlingame | -122.3483099 | 37.5480113 | 3.26 | 1.16 | 1-5% (lowest scores) |
| 6081605800 | 2640 | San Mateo | 94402 | San Mateo | -122.3451754 | 37.5680176 | 3.24 | 1.15 | 1-5% (lowest scores) |
| 6037800101 | 5485 | Los Angeles | 91302 | Calabasas | -118.6236584 | 34.1316542 | 3.23 | 1.14 | 1-5% (lowest scores) |
| 6013355306 | 4922 | Contra Costa | 94517 | Clayton | -121.9256511 | 37.8934212 | 3.16 | 1.12 | 1-5% (lowest scores) |
| 6013353001 | 3521 | Contra Costa | 94563 | Orinda | -122.1812338 | 37.8566708 | 3.15 | 1.11 | 1-5% (lowest scores) |
| 6083002907 | 4190 | Santa Barbara | 93117 | Goleta | -119.8420038 | 34.4739783 | 3.15 | 1.10 | 1-5% (lowest scores) |
| 6037620904 | 2888 | Los Angeles | 90266 | Manhattan Beach | -118.410369 | 33.8807307 | 3.14 | 1.08 | 1-5% (lowest scores) |
| 6053012200 | 2683 | Monterey | 93950 | Pacific Grove | -121.9208115 | 36.6173223 | 3.13 | 1.07 | 1-5% (lowest scores) |
| 6001421400 | 1593 | Alameda | 94707 | Berkeley | -122.270922 | 37.8883409 | 3.11 | 1.06 | 1-5% (lowest scores) |
| 6085511910 | 3042 | Santa Clara | 95120 | San Jose | -121.8693742 | 37.2129709 | 3.10 | 1.05 | 1-5% (lowest scores) |
| 6053011700 | 3810 | Monterey | 93923 | Carmel | -121.9250324 | 36.5294601 | 3.08 | 1.03 | 1-5% (lowest scores) |
| 6061021604 | 3161 | Placer | 95602 | Auburn | -121.1657403 | 38.983718 | 3.06 | 1.02 | 1-5% (lowest scores) |
| 6013355116 | 5664 | Contra Costa | 94582 | San Ramon | -121.8811647 | 37.7733137 | 3.06 | 1.01 | 1-5% (lowest scores) |
| 6073017305 | 2969 | San Diego | 92075 | Solana Beach | -117.2420769 | 33.0027873 | 3.05 | 1.00 | 1-5% (lowest scores) |
| 6061021122 | 3463 | Placer | 95765 | Rocklin | -121.2420642 | 38.8290525 | 3.04 | 0.98 | 1-5% (lowest scores) |
| 6085511702 | 2684 | Santa Clara | 94024 | Los Altos | -122.0975545 | 37.3534664 | 3.04 | 0.97 | 1-5% (lowest scores) |
| 6079010403 | 3788 | San Luis Obispo | 93428 | Cambria | -121.0752154 | 35.5312167 | 3.02 | 0.96 | 1-5% (lowest scores) |
| 6075060100 | 3235 | San Francisco | 94129 | San Francisco | -122.480109 | 37.7991353 | 2.98 | 0.95 | 1-5% (lowest scores) |
| 6073017047 | 4021 | San Diego | 92131 | San Diego | -117.0766489 | 32.9144857 | 2.95 | 0.93 | 1-5% (lowest scores) |
| 6073007200 | 5493 | San Diego | 92106 | San Diego | -117.2533174 | 32.7215901 | 2.94 | 0.92 | 1-5% (lowest scores) |
| 6013346201 | 7181 | Contra Costa | 94526 | Danville | -121.9759134 | 37.8447107 | 2.93 | 0.91 | 1-5% (lowest scores) |
| 6073008310 | 5392 | San Diego | 92037 | La Jolla | -117.2458162 | 32.8253173 | 2.90 | 0.90 | 1-5% (lowest scores) |
| 6085510300 | 4020 | Santa Clara | 94022 | Los Altos | -122.1115851 | 37.377503 | 2.89 | 0.88 | 1-5% (lowest scores) |
| 6073017200 | 4146 | San Diego | 92014 | Del Mar | -117.2641232 | 32.9625651 | 2.89 | 0.87 | 1-5% (lowest scores) |
| 6041124100 | 5441 | Marin | 94920 | Belvedere Tiburon | -122.4887283 | 37.902744 | 2.89 | 0.86 | 1-5% (lowest scores) |
| 6097151503 | 3572 | Sonoma | 95404 | Santa Rosa | -122.6287915 | 38.4126004 | 2.86 | 0.84 | 1-5% (lowest scores) |
| 6041114200 | 3087 | Marin | 94930 | Fairfax | -122.5996345 | 38.0029688 | 2.81 | 0.83 | 1-5% (lowest scores) |
| 6053012302 | 1872 | Monterey | 93950 | Pacific Grove | -121.9173782 | 36.6198749 | 2.79 | 0.82 | 1-5% (lowest scores) |
| 6083000501 | 3263 | Santa Barbara | 93105 | Santa Barbara | -119.7080007 | 34.4674371 | 2.78 | 0.81 | 1-5% (lowest scores) |
| 6059032058 | 7312 | Orange | 92694 | Ladera Ranch | -117.6442558 | 33.5418916 | 2.75 | 0.79 | 1-5% (lowest scores) |
| 6089011801 | 2464 | Shasta | 96073 | Palo Cedro | -122.2544681 | 40.6178721 | 2.72 | 0.78 | 1-5% (lowest scores) |
| 6073008336 | 2332 | San Diego | 92129 | San Diego | -117.1331584 | 32.9678415 | 2.72 | 0.77 | 1-5% (lowest scores) |
| 6017030709 | 4806 | El Dorado | 95672 | Rescue | -121.033171 | 38.6926348 | 2.71 | 0.76 | 1-5% (lowest scores) |
| 6017031700 | 2648 | El Dorado | 95762 | El Dorado Hills | -121.0951787 | 38.6989223 | 2.71 | 0.74 | 1-5% (lowest scores) |
| 6013352202 | 2548 | Contra Costa | 94563 | Orinda | -122.1594575 | 37.8296606 | 2.70 | 0.73 | 1-5% (lowest scores) |
| 6059032042 | 5796 | Orange | 92679 | Trabuco Canyon | -117.5683182 | 33.6539114 | 2.70 | 0.72 | 1-5% (lowest scores) |
| 6081609602 | 1667 | San Mateo | 94070 | San Carlos | -122.2762021 | 37.4889079 | 2.69 | 0.71 | 1-5% (lowest scores) |
| 6037621002 | 1093 | Los Angeles | 90254 | Hermosa Beach | -118.4052294 | 33.8696728 | 2.66 | 0.69 | 1-5% (lowest scores) |
| 6013355114 | 11035 | Contra Costa | 94582 | San Ramon | -121.9082293 | 37.7872985 | 2.63 | 0.68 | 1-5% (lowest scores) |
| 6085507002 | 2800 | Santa Clara | 95030 | Los Gatos | -121.9492004 | 37.2095465 | 2.63 | 0.67 | 1-5% (lowest scores) |
| 6013391000 | 2556 | Contra Costa | 94707 | Berkeley | -122.284319 | 37.90719 | 2.62 | 0.66 | 1-5% (lowest scores) |
| 6075012901 | 2557 | San Francisco | 94123 | San Francisco | -122.427246 | 37.8019611 | 2.59 | 0.64 | 1-5% (lowest scores) |
| 6081611500 | 2677 | San Mateo | 94027 | Atherton | -122.1849613 | 37.4675423 | 2.59 | 0.63 | 1-5% (lowest scores) |
| 6061020606 | 4303 | Placer | 95746 | Granite Bay | -121.2083211 | 38.7166599 | 2.56 | 0.62 | 1-5% (lowest scores) |
| 6085510100 | 2948 | Santa Clara | 94024 | Los Altos | -122.0798819 | 37.3407774 | 2.54 | 0.61 | 1-5% (lowest scores) |
| 6001426100 | 5922 | Alameda | 94611 | Oakland | -122.2253292 | 37.8216214 | 2.52 | 0.59 | 1-5% (lowest scores) |
| 6013353002 | 4078 | Contra Costa | 94563 | Orinda | -122.1684192 | 37.8795035 | 2.49 | 0.58 | 1-5% (lowest scores) |
| 6053011802 | 1830 | Monterey | 93923 | Carmel | -121.9239502 | 36.5494476 | 2.44 | 0.57 | 1-5% (lowest scores) |
| 6013355113 | 4985 | Contra Costa | 94506 | Danville | -121.9040691 | 37.8065479 | 2.44 | 0.55 | 1-5% (lowest scores) |
| 6053012100 | 2263 | Monterey | 93950 | Pacific Grove | -121.9252483 | 36.6129762 | 2.44 | 0.54 | 1-5% (lowest scores) |
| 6083001500 | 3091 | Santa Barbara | 93108 | Santa Barbara | -119.6071067 | 34.4581241 | 2.35 | 0.53 | 1-5% (lowest scores) |
| 6041127000 | 4579 | Marin | 94941 | Mill Valley | -122.5585051 | 37.9104407 | 2.34 | 0.52 | 1-5% (lowest scores) |
| 6075020401 | 2846 | San Francisco | 94114 | San Francisco | -122.4434836 | 37.7595166 | 2.31 | 0.50 | 1-5% (lowest scores) |
| 6055201403 | 800 | Napa | 94558 | Napa | -122.1823381 | 38.421982 | 2.29 | 0.49 | 1-5% (lowest scores) |
| 6081612700 | 2202 | San Mateo | 94025 | Menlo Park | -122.1886855 | 37.4439637 | 2.26 | 0.48 | 1-5% (lowest scores) |
| 6083000103 | 3196 | Santa Barbara | 93105 | Santa Barbara | -119.7744367 | 34.4984602 | 2.21 | 0.47 | 1-5% (lowest scores) |
| 6053013100 | 1930 | Monterey | 93940 | Monterey | -121.879603 | 36.5816889 | 2.20 | 0.45 | 1-5% (lowest scores) |
| 6013346102 | 5650 | Contra Costa | 94507 | Alamo | -121.9836906 | 37.8636653 | 2.18 | 0.44 | 1-5% (lowest scores) |
| 6059062642 | 2832 | Orange | 92625 | Corona del Mar | -117.8634236 | 33.6046208 | 2.18 | 0.43 | 1-5% (lowest scores) |
| 6013352101 | 3141 | Contra Costa | 94556 | Moraga | -122.0953355 | 37.8450691 | 2.18 | 0.42 | 1-5% (lowest scores) |
| 6013346204 | 7278 | Contra Costa | 94506 | Danville | -121.9506215 | 37.8194966 | 2.17 | 0.40 | 1-5% (lowest scores) |
| 6013345204 | 3586 | Contra Costa | 94507 | Alamo | -122.0429151 | 37.8320573 | 2.17 | 0.39 | 1-5% (lowest scores) |
| 6041102100 | 2295 | Marin | 94945 | Novato | -122.5913644 | 38.1316526 | 2.12 | 0.38 | 1-5% (lowest scores) |
| 6073008324 | 6600 | San Diego | 92014 | Del Mar | -117.2502783 | 32.9516034 | 2.11 | 0.37 | 1-5% (lowest scores) |
| 6001404600 | 4353 | Alameda | 94611 | Oakland | -122.1910599 | 37.8197458 | 2.05 | 0.35 | 1-5% (lowest scores) |
| 6001421600 | 3558 | Alameda | 94708 | Berkeley | -122.2559829 | 37.8839567 | 2.04 | 0.34 | 1-5% (lowest scores) |
| 6085507302 | 2725 | Santa Clara | 95070 | Saratoga | -122.0292243 | 37.2382823 | 1.98 | 0.33 | 1-5% (lowest scores) |
| 6013354002 | 6590 | Contra Costa | 94563 | Orinda | -122.1826098 | 37.9015621 | 1.98 | 0.32 | 1-5% (lowest scores) |
| 6085510400 | 3131 | Santa Clara | 94022 | Los Altos | -122.1076542 | 37.3913072 | 1.93 | 0.30 | 1-5% (lowest scores) |
| 6041113000 | 3656 | Marin | 94963 | San Geronimo | -122.6665068 | 38.0139328 | 1.85 | 0.29 | 1-5% (lowest scores) |
| 6013347000 | 6171 | Contra Costa | 94549 | Lafayette | -122.1209824 | 37.9329608 | 1.85 | 0.28 | 1-5% (lowest scores) |
| 6013346101 | 3433 | Contra Costa | 94598 | Walnut Creek | -122.0070141 | 37.8810018 | 1.81 | 0.26 | 1-5% (lowest scores) |
| 6001400200 | 1974 | Alameda | 94618 | Oakland | -122.2495763 | 37.848171 | 1.81 | 0.25 | 1-5% (lowest scores) |
| 6013345113 | 4337 | Contra Costa | 94506 | Danville | -121.9417988 | 37.7955824 | 1.76 | 0.24 | 1-5% (lowest scores) |
| 6001421200 | 3563 | Alameda | 94707 | Berkeley | -122.2752271 | 37.8975481 | 1.75 | 0.23 | 1-5% (lowest scores) |
| 6085506804 | 3629 | Santa Clara | 95032 | Los Gatos | -121.9339443 | 37.239751 | 1.75 | 0.21 | 1-5% (lowest scores) |
| 6013352201 | 5750 | Contra Costa | 94556 | Moraga | -122.1392991 | 37.8529718 | 1.73 | 0.20 | 1-5% (lowest scores) |
| 6073008331 | 2466 | San Diego | 92130 | San Diego | -117.2241058 | 32.9426037 | 1.72 | 0.19 | 1-5% (lowest scores) |
| 6061020105 | 1352 | Placer | 96140 | Carnelian Bay | -120.0964128 | 39.2320269 | 1.72 | 0.18 | 1-5% (lowest scores) |
| 6059042332 | 5399 | Orange | 92677 | Laguna Niguel | -117.7023638 | 33.500522 | 1.66 | 0.16 | 1-5% (lowest scores) |
| 6013351200 | 5812 | Contra Costa | 94549 | Lafayette | -122.1051075 | 37.8682861 | 1.64 | 0.15 | 1-5% (lowest scores) |
| 6001421100 | 1992 | Alameda | 94708 | Berkeley | -122.2661928 | 37.899434 | 1.47 | 0.14 | 1-5% (lowest scores) |
| 6041119100 | 4609 | Marin | 94904 | Greenbrae | -122.5532763 | 37.9435456 | 1.45 | 0.13 | 1-5% (lowest scores) |
| 6053011604 | 1913 | Monterey | 93923 | Carmel | -121.871267 | 36.4997312 | 1.42 | 0.11 | 1-5% (lowest scores) |
| 6041126100 | 5808 | Marin | 94941 | Mill Valley | -122.540486 | 37.9121511 | 1.39 | 0.10 | 1-5% (lowest scores) |
| 6037262802 | 3759 | Los Angeles | 90272 | Pacific Palisades | -118.5024565 | 34.0458645 | 1.31 | 0.09 | 1-5% (lowest scores) |
| 6097154303 | 1720 | Sonoma | 95421 | Cazadero | -123.3277435 | 38.610412 | 1.28 | 0.08 | 1-5% (lowest scores) |
| 6053011602 | 5266 | Monterey | 93923 | Carmel | -121.8182712 | 36.5409106 | 1.26 | 0.06 | 1-5% (lowest scores) |
| 6053011801 | 1885 | Monterey | 93923 | Carmel | -121.9209602 | 36.5587379 | 1.16 | 0.05 | 1-5% (lowest scores) |
| 6073008102 | 3395 | San Diego | 92037 | La Jolla | -117.2734661 | 32.8191521 | 1.09 | 0.04 | 1-5% (lowest scores) |
| 6013352102 | 5586 | Contra Costa | 94556 | Moraga | -122.1053062 | 37.8173344 | 1.06 | 0.03 | 1-5% (lowest scores) |
| 6013392000 | 2451 | Contra Costa | 94708 | Berkeley | -122.2748794 | 37.9094178 | 0.98 | 0.01 | 1-5% (lowest scores) |
| 6037207400 | 1363 | Los Angeles | 90012 | Los Angeles | -118.2466502 | 34.0561941 | NA | NA | NA |
| 6037980002 | 0 | Los Angeles | 90745 | Carson | -118.2386708 | 33.8104081 | NA | NA | NA |
| 6037980014 | 239 | Los Angeles | 90744 | Wilmington | -118.2384201 | 33.7824778 | NA | NA | NA |
| 6037532400 | 112 | Los Angeles | 90058 | Los Angeles | -118.2109137 | 34.0029371 | NA | NA | NA |
| 6037980033 | 61 | Los Angeles | 90802 | Long Beach | -118.2203101 | 33.7443155 | NA | NA | NA |
| 6037980031 | 1262 | Los Angeles | 90731 | San Pedro | -118.2627271 | 33.7338349 | NA | NA | NA |
| 6059021813 | 25 | Orange | 92807 | Anaheim | -117.8046652 | 33.8581239 | NA | NA | NA |
| 6037980001 | 0 | Los Angeles | 91505 | Burbank | -118.3575364 | 34.1997155 | NA | NA | NA |
| 6037504102 | 22 | Los Angeles | 90670 | Santa Fe Springs | -118.0424162 | 33.9002766 | NA | NA | NA |
| 6059052404 | 549 | Orange | 92618 | Irvine | -117.7191073 | 33.6738701 | NA | NA | NA |
| 6037980015 | 554 | Los Angeles | 90731 | San Pedro | -118.2888293 | 33.773215 | NA | NA | NA |
| 6037980025 | 0 | Los Angeles | 90745 | Carson | -118.240029 | 33.8433748 | NA | NA | NA |
| 6037575500 | 76 | Los Angeles | 90813 | Long Beach | -118.2146254 | 33.7868656 | NA | NA | NA |
| 6037320000 | 0 | Los Angeles | 91608 | Universal City | -118.3509328 | 34.1387609 | NA | NA | NA |
| 6037980009 | 14 | Los Angeles | 90027 | Los Angeles | -118.3009695 | 34.1412655 | NA | NA | NA |
| 6037980005 | 0 | Los Angeles | 90501 | Torrance | -118.3273387 | 33.8534589 | NA | NA | NA |
| 6071980100 | 0 | San Bernardino | 92408 | San Bernardino | -117.2398343 | 34.0978652 | NA | NA | NA |
| 6029003900 | 2250 | Kern | 93263 | Shafter | -119.1781809 | 35.5027102 | NA | NA | NA |
| 6037402404 | 1945 | Los Angeles | 91768 | Pomona | -117.8174587 | 34.0539197 | NA | NA | NA |
| 6037980028 | 4 | Los Angeles | 90045 | Los Angeles | -118.417488 | 33.942108 | NA | NA | NA |
| 6037980030 | 0 | Los Angeles | 90245 | El Segundo | -118.4094782 | 33.9096235 | NA | NA | NA |
| 6073003800 | 6530 | San Diego | 92136 | San Diego | -117.1207979 | 32.6835337 | NA | NA | NA |
| 6037403200 | 391 | Los Angeles | 91768 | Pomona | -117.812962 | 34.0382703 | NA | NA | NA |

| | | | | | | | | | | | |
|---|---|---|---|---|---|---|---|---|---|---|---|
| 6037980007 | 0 | Los Angeles | 90803 | Long Beach | -118.1007408 | 33.7663042 | NA | NA | NA | No | 
| 6037980024 | 186 | Los Angeles | 91406 | Van Nuys | -118.4883751 | 34.1803242 | NA | NA | NA | No | 
| 6037980022 | 4 | Los Angeles | 91344 | Granada Hills | -118.4803023 | 34.3029687 | NA | NA | NA | No | 
| 6037701100 | 746 | Los Angeles | 90049 | Los Angeles | -118.4570058 | 34.0575852 | NA | NA | NA | No | 
| 6037980013 | 59 | Los Angeles | 90245 | El Segundo | -118.3871451 | 33.9164971 | NA | NA | NA | No | 
| 6065046601 | 4888 | Riverside | 92860 | Norco | -117.5681132 | 33.9219056 | NA | NA | NA | No | 
| 6075980900 | 350 | San Francisco | 94124 | San Francisco | -122.389477 | 37.7462861 | NA | NA | NA | No | 
| 6073006200 | 144 | San Diego | 92101 | San Diego | -117.1904453 | 32.7317286 | NA | NA | NA | No | 
| 6037980006 | 0 | Los Angeles | 90808 | Long Beach | -118.0863795 | 33.814394 | NA | NA | NA | No | 
| 6081984300 | 0 | San Mateo | 94128 | San Francisco | -122.3768614 | 37.6147578 | NA | NA | NA | No | 
| 6073011300 | 6520 | San Diego | 92135 | San Diego | -117.2096422 | 32.6992345 | NA | NA | NA | No | 
| 6037980008 | 145 | Los Angeles | 91406 | Van Nuys | -118.4906762 | 34.2106318 | NA | NA | NA | No | 
| 6037980021 | 33 | Los Angeles | 91342 | Sylmar | -118.3812804 | 34.2700342 | NA | NA | NA | No | 
| 6059980000 | 19 | Orange | 92802 | Anaheim | -117.9186718 | 33.8096249 | NA | NA | NA | No | 
| 6001983200 | 540 | Alameda | 94607 | Oakland | -122.277268 | 37.7959455 | NA | NA | NA | No | 
| 6065980004 | 9 | Riverside | 92507 | Riverside | -117.3162137 | 33.9361587 | NA | NA | NA | No | 
| 6037265301 | 9344 | Los Angeles | 90024 | Los Angeles | -118.4454343 | 34.0710687 | NA | NA | NA | No | 
| 6073005500 | 198 | San Diego | 92134 | San Diego | -117.1468406 | 32.7241215 | NA | NA | NA | No | 
| 6025010101 | 4601 | Imperial | 92233 | Calipatria | -115.4628141 | 33.1874637 | NA | NA | NA | No | 
| 6001981900 | 38 | Alameda | 94607 | Oakland | -122.3198955 | 37.8033573 | NA | NA | NA | No | 
| 6037980018 | 1 | Los Angeles | 90807 | Long Beach | -118.1539086 | 33.8152519 | NA | NA | NA | No | 
| 6001982000 | 71 | Alameda | 94607 | Oakland | -122.2943959 | 37.7961258 | NA | NA | NA | No | 
| 6037920200 | 6920 | Los Angeles | 91384 | Castaic | -118.5983695 | 34.465384 | NA | NA | NA | No | 
| 6073006300 | 3435 | San Diego | 92140 | San Diego | -117.1977435 | 32.7377186 | NA | NA | NA | No | 
| 6055200900 | 1230 | Napa | 94558 | Napa | -122.2727846 | 38.274245 | NA | NA | NA | No | 
| 6037980020 | 0 | Los Angeles | 91352 | Sun Valley | -118.303403 | 34.2266893 | NA | NA | NA | No | 
| 6037599100 | 527 | Los Angeles | 90704 | Avalon | -118.4584354 | 32.8977598 | NA | NA | NA | No | 
| 6073009901 | 626 | San Diego | 92106 | San Diego | -117.2455744 | 32.6853619 | NA | NA | NA | No | 
| 6107004000 | 560 | Tulare | 93257 | Porterville | -118.9838486 | 36.0380615 | NA | NA | NA | No | 
| 6037551600 | 31 | Los Angeles | 90242 | Downey | -118.1619504 | 33.9255374 | NA | NA | NA | No | 
| 6071980200 | 4499 | San Bernardino | 92394 | Victorville | -117.3717881 | 34.5852811 | NA | NA | NA | No | 
| 6029004302 | 5710 | Kern | 93280 | Wasco | -119.4116611 | 35.5905734 | NA | NA | NA | No | 
| 6037980019 | 173 | Los Angeles | 90272 | Pacific Palisades | -118.5442322 | 34.0874598 | NA | NA | NA | No | 
| 6073009902 | 2 | San Diego | 92118 | Coronado | -117.1887005 | 32.7122439 | NA | NA | NA | No | 
| 6031001602 | 12118 | Kings | 93212 | Corcoran | -119.5540669 | 36.057953 | NA | NA | NA | No | 
| 6029004603 | 490 | Kern | 93215 | Delano | -119.3223087 | 35.7673126 | NA | NA | NA | No | 
| 6075980200 | 320 | San Francisco | 94121 | San Francisco | -122.5028261 | 37.7860688 | NA | NA | NA | No | 
| 6071012300 | 1513 | San Bernardino | 92346 | Highland | -117.2197585 | 34.1390176 | NA | NA | NA | No | 
| 6075980300 | 171 | San Francisco | 94122 | San Francisco | -122.4920873 | 37.7684025 | NA | NA | NA | No | 
| 6111003012 | 321 | Ventura | 93036 | Oxnard | -119.1801048 | 34.2350756 | NA | NA | NA | No | 
| 6067988300 | 6747 | Sacramento | 95630 | Folsom | -121.1564584 | 38.6941055 | NA | NA | NA | No | 
| 6037574700 | 117 | Los Angeles | 90815 | Long Beach | -118.118648 | 33.7784358 | NA | NA | NA | No | 
| 6029006002 | 5906 | Kern | 93561 | Tehachapi | -118.5709793 | 35.1129063 | NA | NA | NA | No | 
| 6067007101 | 253 | Sacramento | 95836 | Sacramento | -121.550054 | 38.7092002 | NA | NA | NA | No | 
| 6065043814 | 905 | Riverside | 92320 | Calimesa | -117.0288457 | 33.9595006 | NA | NA | NA | No | 
| 6083002604 | 3582 | Santa Barbara | 93436 | Lompoc | -120.4865233 | 34.6780677 | NA | NA | NA | No | 
| 6001422600 | 1215 | Alameda | 94720 | Berkeley | -122.2545472 | 37.8738125 | NA | NA | NA | No | 
| 6037980023 | 8 | Los Angeles | 91311 | Chatsworth | -118.6324389 | 34.2367861 | NA | NA | NA | No | 
| 6029004601 | 5363 | Kern | 93215 | Delano | -119.312322 | 35.783063 | NA | NA | NA | No | 
| 6085511608 | 2687 | Santa Clara | 94305 | Stanford | -122.1772178 | 37.4292567 | NA | NA | NA | No | 
| 6037910811 | 305 | Los Angeles | 93510 | Acton | -118.1235974 | 34.4083832 | NA | NA | NA | No | 
| 6095253000 | 7810 | Solano | 95687 | Vacaville | -121.9787847 | 38.3206557 | NA | NA | NA | No | 
| 6061022200 | 909 | Placer | 96145 | Tahoe City | -120.1832593 | 39.1853773 | NA | NA | NA | No | 
| 6037574601 | 1863 | Los Angeles | 90840 | Long Beach | -118.1148009 | 33.7837945 | NA | NA | NA | No | 
| 6053980000 | 7 | Monterey | 93905 | Salinas | -121.6050021 | 36.6632605 | NA | NA | NA | No | 
| 6109985202 | 3590 | Tuolumne | 95327 | Jamestown | -120.5370715 | 37.8919389 | NA | NA | NA | No | 
| 6037930101 | 119 | Los Angeles | 91011 | La Canada Flintridge | -118.1390988 | 34.256481 | NA | NA | NA | No | 
| 6065981000 | 7634 | Riverside | 92239 | Desert Center | -114.9176889 | 33.5603344 | NA | NA | NA | No | 
| 6037980004 | 169 | Los Angeles | 93550 | Palmdale | -118.0947612 | 34.619832 | NA | NA | NA | No | 
| 6053012600 | 2254 | Monterey | 93944 | Monterey | -121.911505 | 36.6045157 | NA | NA | NA | No | 
| 6037980026 | 20 | Los Angeles | 91042 | Tujunga | -118.2633094 | 34.2734829 | NA | NA | NA | No | 
| 6083980000 | 10 | Santa Barbara | 93117 | Goleta | -119.8393624 | 34.4270203 | NA | NA | NA | No | 
| 6031981800 | 6423 | Kings | 93204 | Avenal | -120.1209322 | 35.9707414 | NA | NA | NA | No | 
| 6053010900 | 10109 | Monterey | 93960 | Soledad | -121.374591 | 36.4717572 | NA | NA | NA | No | 
| 6037920026 | 419 | Los Angeles | 91390 | Santa Clarita | -118.4302105 | 34.477891 | NA | NA | NA | No | 
| 6095980000 | 16 | Solano | 94535 | Travis AFB | -121.9456515 | 38.2544515 | NA | NA | NA | No | 
| 6043000400 | 1802 | Mariposa | 95389 | Yosemite National Pa | -119.5740176 | 37.6979738 | NA | NA | NA | No | 
| 6041122000 | 4854 | Marin | 94964 | San Quentin | -122.4901332 | 37.9403057 | NA | NA | NA | No | 
| 6037910812 | 464 | Los Angeles | 93550 | Palmdale | -118.0967177 | 34.5024487 | NA | NA | NA | No | 
| 6037901003 | 6188 | Los Angeles | 93536 | Lancaster | -118.2277779 | 34.6955698 | NA | NA | NA | No | 
| 6079011400 | 6446 | San Luis Obispo | 93405 | San Luis Obispo | -120.7001012 | 35.3228262 | NA | NA | NA | No | 
| 6019007901 | 5652 | Fresno | 93210 | Coalinga | -120.2430393 | 36.1300647 | NA | NA | NA | No | 
| 6037980003 | 2 | Los Angeles | 93535 | Lancaster | -117.9667789 | 34.8098536 | NA | NA | NA | No | 
| 6037920011 | 286 | Los Angeles | 91390 | Santa Clarita | -118.4200954 | 34.5455872 | NA | NA | NA | No | 
| 6085504417 | 323 | Santa Clara | 95035 | Milpitas | -121.8525394 | 37.4321281 | NA | NA | NA | No | 
| 6053014104 | 1611 | Monterey | 93955 | Seaside | -121.7987528 | 36.6518615 | NA | NA | NA | No | 
| 6079012800 | 1107 | San Luis Obispo | 93422 | Atascadero | -120.6348783 | 35.4672586 | NA | NA | NA | No | 
| 6017031900 | 133 | El Dorado | 95720 | Kyburz | -120.2657696 | 38.7295194 | NA | NA | NA | No | 
| 6009000504 | 942 | Calaveras | 95223 | Arnold | -120.2111512 | 38.4051305 | NA | NA | NA | No | 
| 6065940100 | 166 | Riverside | 92239 | Desert Center | -114.4753345 | 34.0001828 | NA | NA | NA | No | 
| 6053011502 | 1710 | Monterey | 93923 | Carmel | -121.735102 | 36.3010787 | NA | NA | NA | No | 
| 6083980100 | 11 | Santa Barbara | 57 | Channel Islands | -120.0482206 | 33.9481863 | NA | NA | NA | No | 
| 6111980000 | 56 | Ventura | 61 | Channel Is Air Guard S | -119.5035884 | 33.2556547 | NA | NA | NA | No | 

**This page intentionally left blank**

## CalEnviroScreen 3.0, June 2018 update:

**For more information, see the report and access additional data at:**

CalEnviroScreen 3.0 Webpage

**A web map of the CalEnviroScreen 3.0 results is available at:**

CalEnviroScreen 3.0 Web Map

| Variable Name | Description | CalEnviroScreen Category |
|---|---|---|
| Census Tract | Census Tract ID from 2010 Census | |
| Total Population | 2010 population in census tracts | |
| California County | California county that the census tract falls within | |
| ZIP | Postal ZIP Code that the census tract falls within | |
| Nearby City (to help approximate location only) | City or nearby city the census tract falls within | |
| Longitude | Longitude of the centroid of the census tract | |
| Latitude | Latitude of the centroid of the census tract | |
| **CES 3.0 Score** | CalEnviroScreen Score, Pollution Score multiplied by Population Characteristics Score | |
| **CES 3.0 Percentile** | Percentile of the CalEnviroScreen score | |
| **CES 3.0 Percentile Range** | Percentile of the CalEnviroScreen score, grouped by 5% increments | |
| **SB 535 Disadvantaged Community** | Disadvantaged communities list from: https://oehha.ca.gov/calenviroscreen/sb535 http://www.calepa.ca.gov/EnvJustice/GHGInvest/ | |
| Ozone | Amount of daily maximum 8 hour Ozone concentration | Pollution Burden (Exposures Indicator) |
| Ozone Pctl | Ozone percentile | Pollution Burden (Exposures Indicator) |
| PM2.5 | Annual mean PM 2.5 concentrations | Pollution Burden (Exposures Indicator) |
| PM2.5 Pctl | PM2.5 percentile | Pollution Burden (Exposures Indicator) |
| Diesel PM | Diesel PM emissions from on-road and non-road sources | Pollution Burden (Exposures Indicator) |
| Diesel PM Pctl | Diesel PM percentile | Pollution Burden (Exposures Indicator) |
| Drinking Water | Drinking water contaminant index for selected contaminants | Pollution Burden (Exposures Indicator) |
| Drinking Water Pctl | Drinking water percentile | Pollution Burden (Exposures Indicator) |
| Pesticides | Total pounds of selected active pesticide ingredients (filtered for hazard and volatility) used in production-agriculture per square mile in the census tract | Pollution Burden (Exposures Indicator) |
| Pesticides Pctl | Pesticides percentile | Pollution Burden (Exposures Indicator) |
| Tox. Release | Toxicity-weighted concentrations of modeled chemical releases to air from facility emissions and off-site incineration (from RSEI) | Pollution Burden (Exposures Indicator) |
| Tox. Release Pctl | Toxic release percentile | Pollution Burden (Exposures Indicator) |
| Traffic | Traffic density, in vehicle-kilometers per hour per road length, within 150 meters of the census tract boundary | Pollution Burden (Exposures Indicator) |
| Traffic Pctl | Traffic percentile | Pollution Burden (Exposures Indicator) |
| Cleanup Sites | Cleanup sites, sum of weighted EnviroStor cleanup sites within buffered distances to populated blocks of census tracts | Pollution Burden (Environmental Effects Indicator) |
| Cleanup Sites Pctl | Cleanup sites percentile | Pollution Burden (Environmental Effects Indicator) |
| Groundwater Threats | Groundwater threats, sum of weighted GeoTracker leaking underground storage tank sites within buffered distances to populated blocks of census tracts | Pollution Burden (Environmental Effects Indicator) |
| Groundwater Threats Pctl | Groundwater threats percentile | Pollution Burden (Environmental Effects Indicator) |
| Haz. Waste | Sum of weighted hazardous waste facilities and large quantity generators within buffered distances to populated blocks of census tracts | Pollution Burden (Environmental Effects Indicator) |
| Haz. Waste Pctl | Hazardous waste percentile | Pollution Burden (Environmental Effects Indicator) |
| Imp. Water Bodies | Impaired water bodies, sum of number of pollutants across all impaired water bodies within buffered distances to populated blocks of census tracts | Pollution Burden (Environmental Effects Indicator) |
| Imp. Water Bodies Pctl | Impaired water bodies percentile | Pollution Burden (Environmental Effects Indicator) |
| Solid Waste | Sum of weighted solid waste sites and facilities (SWIS) within buffered distances to populated blocks of census tracts | Pollution Burden (Environmental Effects Indicator) |
| Solid Waste Pctl | Solid waste percentile | Pollution Burden (Environmental Effects Indicator) |
| Pollution Burden | Average of percentiles from the Pollution Burden indicators (with a half weighting for the Environmental Effects indicators) | |
| Pollution Burden Score | Pollution Burden variable scaled with a range of 0-10. (Used to calculate CES 3.0 Score) | |
| Pollution Burden Pctl | Pollution burden percentile | |
| Asthma | Age-adjusted rate of emergency department visits for asthma | Population Characteristics (Sensitive Populations) |
| Asthma Pctl | Asthma percentile | Population Characteristics (Sensitive Populations) |
| Low Birth Weight | Percent low birth weight | Population Characteristics (Sensitive Populations) |

| | | |
|---|---|---|
| Low Birth Weight Pctl | Low birth weight percentile | Population Characteristics (Sensitive Populations) |
| Cardiovascular Disease | Age-adjusted rate of emergency department visits for heart attacks per 10,000 | Population Characteristics (Sensitive Populations) |
| Cardiovascular Disease Pctl | Cardiovascular disease percentile | Population Characteristics (Sensitive Populations) |
| Education | Percent of population over 25 with less than a high school education | Population Characteristics (Socioeconomic Factors) |
| Education Pctl | Education percentile | Population Characteristics (Socioeconomic Factors) |
| Linguistic Isolation | Percent limited English speaking households | Population Characteristics (Socioeconomic Factors) |
| Linguistic Isolation Pctl | Linguistic isolation percentile | Population Characteristics (Socioeconomic Factors) |
| Poverty | Percent of population living below two times the federal poverty level | Population Characteristics (Socioeconomic Factors) |
| Poverty | Poverty percentile | Population Characteristics (Socioeconomic Factors) |
| Unemployment | Percent of the population over the age of 16 that is unemployed and eligible for the labor force | Population Characteristics (Socioeconomic Factors) |
| Unemployment Pctl | Unemployment percentile | Population Characteristics (Socioeconomic Factors) |
| Housing Burden | Percent housing burdened low income households | Population Characteristics (Socioeconomic Factors) |
| Housing Burden Pctl | Housing burden percentile | Population Characteristics (Socioeconomic Factors) |
| Pop. Char. | Average of percentiles from the Population Characteristics indicators | |
| Pop. Char. Score | Population Characteristics variable scaled with a range of 0-10. (Used to calculate CES 3.0 Score) | |
| Pop. Char. Score Pctl | Population characteristics percentile | |

## CalEnviroScreen 3.0: Description of Zeros and Missing Values

***8035 California Census Tracts are used in the CalEnviroScreen analysis***

| Indicator | Ozone | PM 2.5 | Diesel PM | Pesticides Use | Toxic Releases | Traffic | Drinking Water | Cleanup sites | Ground-water threats | Hazardous Waste | Impaired Water Bodies | Solid Waste |
|---|---|---|---|---|---|---|---|---|---|---|---|---|
| **# of Zeros** | 0 | 0 | 0 | 5147 | 17 | 0 | 0 | 2553 | 1993 | 2640 | 3512 | 3794 |
| **# of NAs** | 0 | 19 | 0 | 0 | 0 | 56 | 18 | 0 | 0 | 0 | 0 | 0 |

| Indicator | Asthma | LBW | CVD | Education | Linguistic isolation | Poverty | Unemployment | Housing Burden |
|---|---|---|---|---|---|---|---|---|
| **# of Zeros** | 14 | 10 | 14 | 13 | 292 | 1 | 1 | 0 |
| **# of NAs** | 0 | 222 | 0 | 96 | 242 | 79 | 155 | 157 |

**What do indicator raw values of zero and NA mean?**

**NA or missing raw values:**
When an indicator has a missing value ("NA"), it typically means no monitoring or reporting was conducted or no population was reported within that census tract. For example, ambient air quality measures are not available for all California census tracts because many places do not have an air monitor close enough to reliably estimate air quality in that community.
There are 11 out of 8035 census tracts that have zero population reported by the U.S. Census. These were assigned "NA" for all population characteristic indicators. In addition, census tracts with highly unreliable estimates for the educational attainment, linguistic isolation, poverty, and rent-adjusted income indicators were assigned "NA." These variables are derived from the household data rather than individual level data (see the report for more detail).
**Zero raw values:**
A value of zero, typically implies that monitoring or reporting was conducted, but no impacts were present. For many exposure and environmental effects indicators, this means that no facilities or sites were located within 1000 meters of a populated area of the census tract. For example, 2553 census tracts did not have a Cleanup site within 1000 meters of a populated area of the census tract. These census tracts were given a value zero. Similarly, a zero for a Population Characteristics indicator such as poverty, for example, means people live there but there are no residents under the poverty level.

**What do percentiles of zero and NA mean?**

**NA or missing percentiles values:**
Indicators that include missing values ("NA") are PM 2.5, Traffic, Drinking Water, Low Birth Weight and all socioeconomic factor indicators. In these cases, missing values were assigned no percentile (given an "NA") and did not contribute to their overall CalEnviroScreen score. For example, if a census tract was missing both and PM2.5 and Traffic the denominator of the exposure indicators was adjusted to five instead of seven indicators.
**Zero percentile values:**
Many census tracts for exposure and environmental effects indicators have a raw value of zero. We do not include these census tracts in the percentile calculation, which would give the false impression that an impact is present. For example, around 64% of census tracts have none of the select pesticides used. If these were used in the percentile calculation, a value of zero would correspond to the 63$^{rd}$ percentile. It is more appropriate to assign these places a percentile value of "0" corresponding to no impact. This means that for the pesticide indicator, 2888 (8035 minus 5147) census tracts make up the percentile range. Indicators with missing values ("NAs") are never included in the percentile calculation. The Education indicator has 7926 census tracts in the percentile calculation (8035 minus 13 (zeros values) minus 96 (missing values) = 7926).

**This page intentionally left blank**

| Census Tract | CES 3.0 Score | CES 3.0 Percentile | CES 3.0 Percentile Range | Total Population | California County | Age group from 2010 Census (%) | | | Race or ethnicity from 2010 Census (%) | | | | | |
|---|---|---|---|---|---|---|---|---|---|---|---|---|---|---|
| | | | | | | Children < 10 (%) | Pop 11-64 years (%) | Elderly > 65 (%) | Hispanic (%) | White (%) | African American (%) | Native American (%) | Asian American (%) | Other (%) |
| 6019001100 | 94.09 | 100.00 | 95-100% (highest scores) | 3174 | Fresno | 18.8 | 73.6 | 7.6 | 65.3 | 4.2 | 24.6 | 0.5 | 3.5 | 1.8 |
| 6071001600 | 90.68 | 99.99 | 95-100% (highest scores) | 6133 | San Bernardino | 19.7 | 76.1 | 4.2 | 91.1 | 5.8 | 0.7 | 0.3 | 1.4 | 0.7 |
| 6019000200 | 85.97 | 99.97 | 95-100% (highest scores) | 3167 | Fresno | 21.5 | 72.5 | 6 | 63.6 | 5.3 | 18.9 | 0.6 | 9.8 | 1.8 |
| 6077000801 | 82.49 | 99.96 | 95-100% (highest scores) | 6692 | San Joaquin | 18.7 | 74.5 | 6.8 | 57.4 | 6 | 12.5 | 0.3 | 20.9 | 2.8 |
| 6019001500 | 82.03 | 99.95 | 95-100% (highest scores) | 2206 | Fresno | 14.8 | 72.1 | 13.1 | 71.8 | 21.4 | 1.2 | 0.5 | 4.5 | 0.6 |
| 6037204920 | 80.73 | 99.94 | 95-100% (highest scores) | 2598 | Los Angeles | 15.3 | 74.5 | 10.2 | 98.1 | 1.2 | 0.1 | 0.1 | 0.2 | 0.3 |
| 6077000300 | 80.18 | 99.92 | 95-100% (highest scores) | 2396 | San Joaquin | 16.7 | 69.8 | 13.5 | 51.8 | 16.4 | 16.4 | 1.3 | 9.9 | 4.1 |
| 6019001000 | 80.13 | 99.91 | 95-100% (highest scores) | 4106 | Fresno | 21 | 71.3 | 7.7 | 52.7 | 2.7 | 28.7 | 0.4 | 14.3 | 1.2 |
| 6037206050 | 79.03 | 99.90 | 95-100% (highest scores) | 2146 | Los Angeles | 12.4 | 63.2 | 24.4 | 79.3 | 8.9 | 4.1 | 0.1 | 7.2 | 0.5 |
| 6019000400 | 78.53 | 99.89 | 95-100% (highest scores) | 6343 | Fresno | 18.3 | 75.8 | 5.9 | 78 | 9.1 | 5.8 | 0.8 | 5.3 | 0.9 |
| 6099002100 | 78.52 | 99.87 | 95-100% (highest scores) | 4165 | Stanislaus | 19.3 | 75.3 | 5.4 | 66.5 | 25.6 | 2.4 | 0.9 | 2.2 | 2.5 |
| 6029002500 | 78.41 | 99.86 | 95-100% (highest scores) | 9122 | Kern | 23.3 | 70.8 | 5.9 | 76.7 | 5.1 | 15.9 | 0.7 | 0.4 | 1.2 |
| 6019000600 | 78.41 | 99.85 | 95-100% (highest scores) | 6161 | Fresno | 21.4 | 71 | 7.6 | 70.8 | 15.2 | 6.8 | 0.7 | 4.4 | 2.2 |
| 6019001201 | 78.05 | 99.84 | 95-100% (highest scores) | 5936 | Fresno | 20.7 | 73.1 | 6.2 | 83.1 | 5.1 | 3.7 | 0.7 | 6.6 | 0.8 |
| 6037205120 | 78.04 | 99.82 | 95-100% (highest scores) | 3618 | Los Angeles | 17.8 | 75 | 7.2 | 96.5 | 0.8 | 1 | 0.1 | 1.1 | 0.4 |
| 6019000902 | 77.65 | 99.81 | 95-100% (highest scores) | 5252 | Fresno | 23.6 | 70.2 | 6.2 | 57.9 | 1.5 | 21.3 | 0.3 | 17.7 | 1.3 |
| 6037291220 | 77.50 | 99.80 | 95-100% (highest scores) | 3353 | Los Angeles | 14.8 | 74.7 | 10.5 | 65.1 | 4.5 | 11.5 | 0.1 | 17 | 1.7 |
| 6019001202 | 77.41 | 99.79 | 95-100% (highest scores) | 4756 | Fresno | 22.5 | 71.4 | 6.1 | 72.5 | 2.5 | 11.7 | 0.4 | 12.3 | 0.6 |
| 6019000800 | 77.40 | 99.77 | 95-100% (highest scores) | 964 | Fresno | 24.5 | 69.7 | 5.8 | 66.9 | 4 | 6.2 | 0.6 | 20.9 | 1.3 |
| 6019000300 | 76.71 | 99.76 | 95-100% (highest scores) | 3609 | Fresno | 18.5 | 70.1 | 11.4 | 62.8 | 3.4 | 25.7 | 0.9 | 5.8 | 1.4 |
| 6037239202 | 76.04 | 99.75 | 95-100% (highest scores) | 4724 | Los Angeles | 19.7 | 75.5 | 4.8 | 82.6 | 0.7 | 16.1 | 0 | 0 | 0.6 |
| 6037226002 | 76.04 | 99.74 | 95-100% (highest scores) | 1604 | Los Angeles | 6.5 | 86.6 | 6.9 | 49.8 | 22.7 | 18.3 | 0.4 | 6.7 | 2.2 |
| 6077000700 | 76.02 | 99.72 | 95-100% (highest scores) | 5269 | San Joaquin | 18.5 | 72.8 | 8.7 | 74.4 | 4 | 4.8 | 0.3 | 14.3 | 2.2 |
| 6019000901 | 75.86 | 99.71 | 95-100% (highest scores) | 3151 | Fresno | 25.5 | 68.7 | 5.8 | 54.4 | 3.6 | 21.9 | 0.1 | 18.5 | 1.5 |
| 6077000100 | 75.54 | 99.70 | 95-100% (highest scores) | 3863 | San Joaquin | 13 | 75 | 12 | 51.9 | 17 | 15.2 | 1 | 11.9 | 3.1 |
| 6099002302 | 75.19 | 99.68 | 95-100% (highest scores) | 4010 | Stanislaus | 19.2 | 73.9 | 6.9 | 76.1 | 18.4 | 1.5 | 0.6 | 2.3 | 1.1 |
| 6071004900 | 74.95 | 99.67 | 95-100% (highest scores) | 7590 | San Bernardino | 20.4 | 74.1 | 5.5 | 86.6 | 6.6 | 4.6 | 0.3 | 0.8 | 1 |
| 6037535400 | 74.46 | 99.66 | 95-100% (highest scores) | 3495 | Los Angeles | 19 | 76.4 | 4.6 | 86.4 | 1.1 | 11.9 | 0 | 0.1 | 0.5 |
| 6019000700 | 74.16 | 99.65 | 95-100% (highest scores) | 3921 | Fresno | 17 | 72.7 | 10.3 | 61.7 | 4.2 | 29 | 0.5 | 2.8 | 1.8 |
| 6065030300 | 74.06 | 99.63 | 95-100% (highest scores) | 4497 | Riverside | 9.9 | 81 | 9.1 | 41.4 | 36.8 | 16 | 0.8 | 2.1 | 2.9 |
| 6019007100 | 73.78 | 99.62 | 95-100% (highest scores) | 7904 | Fresno | 18.8 | 73.2 | 8 | 87.8 | 7.3 | 1.1 | 0.4 | 2.6 | 0.8 |
| 6037243100 | 73.54 | 99.61 | 95-100% (highest scores) | 5350 | Los Angeles | 22.4 | 72.1 | 5.5 | 64.7 | 1.8 | 31.8 | 0.2 | 0.4 | 1 |
| 6037543305 | 73.54 | 99.60 | 95-100% (highest scores) | 2666 | Los Angeles | 9.5 | 72.7 | 17.8 | 27.2 | 26.9 | 37.3 | 0.6 | 5.2 | 2.9 |
| 6071005701 | 73.28 | 99.58 | 95-100% (highest scores) | 2216 | San Bernardino | 14.2 | 61.3 | 24.5 | 59.3 | 19.2 | 11.9 | 1 | 6.7 | 1.9 |
| 6037204600 | 73.13 | 99.57 | 95-100% (highest scores) | 4101 | Los Angeles | 16.8 | 74 | 9.2 | 96.3 | 1.8 | 0.4 | 0.2 | 1.1 | 0.2 |
| 6037227010 | 72.68 | 99.56 | 95-100% (highest scores) | 4662 | Los Angeles | 19.2 | 76.3 | 4.5 | 92.1 | 0.6 | 7.1 | 0.1 | 0 | 0.2 |
| 6099002301 | 72.39 | 99.55 | 95-100% (highest scores) | 7841 | Stanislaus | 20.6 | 74.8 | 4.6 | 74.4 | 15.6 | 2.4 | 0.7 | 5 | 2 |
| 6019000100 | 71.95 | 99.53 | 95-100% (highest scores) | 2860 | Fresno | 0.3 | 92.9 | 6.8 | 55.7 | 21.7 | 16.4 | 0.8 | 4.6 | 0.7 |
| 6077001900 | 71.89 | 99.52 | 95-100% (highest scores) | 5592 | San Joaquin | 18.5 | 72.4 | 9.1 | 74.1 | 7.7 | 10.9 | 0.5 | 4.5 | 2.4 |
| 6037206032 | 71.56 | 99.51 | 95-100% (highest scores) | 5275 | Los Angeles | 15.4 | 71.6 | 13 | 80.3 | 2 | 1.2 | 0.2 | 15.5 | 0.7 |
| 6037226001 | 71.53 | 99.50 | 95-100% (highest scores) | 2068 | Los Angeles | 17.1 | 76.5 | 6.4 | 89.1 | 1.7 | 6.1 | 0.2 | 2.6 | 0.2 |
| 6037239501 | 71.36 | 99.48 | 95-100% (highest scores) | 3454 | Los Angeles | 19.3 | 74.1 | 6.6 | 74.8 | 0.7 | 24 | 0 | 0.1 | 0.3 |
| 6019002000 | 71.34 | 99.47 | 95-100% (highest scores) | 6369 | Fresno | 18.4 | 73.2 | 8.4 | 58.3 | 22.5 | 8.1 | 0.9 | 7.9 | 2.4 |
| 6077005119 | 71.30 | 99.46 | 95-100% (highest scores) | 6006 | San Joaquin | 19.3 | 75 | 5.7 | 29.8 | 22.5 | 10.1 | 0.3 | 33.1 | 4.3 |
| 6037203100 | 71.05 | 99.45 | 95-100% (highest scores) | 4839 | Los Angeles | 20.1 | 74 | 5.9 | 95.8 | 1 | 1.1 | 0.3 | 1.5 | 0.3 |
| 6037530700 | 71.03 | 99.43 | 95-100% (highest scores) | 2213 | Los Angeles | 16.5 | 76 | 7.5 | 95.2 | 2.1 | 0.8 | 0.2 | 1.5 | 0.2 |
| 6073005000 | 70.91 | 99.42 | 95-100% (highest scores) | 2227 | San Diego | 17.3 | 76.2 | 6.5 | 90.3 | 5.4 | 1.8 | 0.2 | 1.4 | 0.9 |
| 6037301601 | 70.91 | 99.41 | 95-100% (highest scores) | 6198 | Los Angeles | 8.7 | 75.8 | 15.5 | 18.9 | 66.8 | 1.2 | 0.1 | 8.3 | 4.7 |
| 6037185320 | 70.89 | 99.39 | 95-100% (highest scores) | 3081 | Los Angeles | 13.6 | 76 | 10.4 | 90 | 3.7 | 0.6 | 0.2 | 5 | 0.6 |
| 6037543202 | 70.82 | 99.38 | 95-100% (highest scores) | 4867 | Los Angeles | 19.4 | 75.1 | 5.5 | 73.6 | 0.9 | 23.5 | 0 | 1.1 | 0.8 |
| 6065030502 | 70.63 | 99.37 | 95-100% (highest scores) | 2220 | Riverside | 18.2 | 76.2 | 5.6 | 87.2 | 7.6 | 3.7 | 0.3 | 0.5 | 0.7 |
| 6071012500 | 70.61 | 99.36 | 95-100% (highest scores) | 4268 | San Bernardino | 19.2 | 72.6 | 8.2 | 87.7 | 6.7 | 3.3 | 0.4 | 0.8 | 1.1 |
| 6037531302 | 70.59 | 99.34 | 95-100% (highest scores) | 6709 | Los Angeles | 19.9 | 73.9 | 6.2 | 98.1 | 1.1 | 0.2 | 0.1 | 0.1 | 0.4 |
| 6019001301 | 70.56 | 99.33 | 95-100% (highest scores) | 5653 | Fresno | 18.6 | 74.2 | 7.2 | 84.9 | 5.9 | 2.5 | 0.6 | 5.2 | 0.8 |
| 6019002502 | 70.56 | 99.32 | 95-100% (highest scores) | 5431 | Fresno | 24.3 | 71 | 4.7 | 66.6 | 5.2 | 3.6 | 0.5 | 22.4 | 1.8 |
| 6037402801 | 70.39 | 99.31 | 95-100% (highest scores) | 5170 | Los Angeles | 21.5 | 75.1 | 3.4 | 92.5 | 2.9 | 1.8 | 0.1 | 2 | 0.6 |
| 6019001304 | 70.21 | 99.29 | 95-100% (highest scores) | 5796 | Fresno | 21.3 | 71.8 | 6.9 | 60.2 | 3.5 | 9 | 0.8 | 25.2 | 1.4 |
| 6077002201 | 70.16 | 99.28 | 95-100% (highest scores) | 2771 | San Joaquin | 19.5 | 71.8 | 8.7 | 67.1 | 2.9 | 24.5 | 0.3 | 2.8 | 2.4 |
| 6037532304 | 69.97 | 99.27 | 95-100% (highest scores) | 3987 | Los Angeles | 14.6 | 76.5 | 8.9 | 87.8 | 5.9 | 3.6 | 0.7 | 1.3 | 0.6 |
| 6019001303 | 69.96 | 99.26 | 95-100% (highest scores) | 2888 | Fresno | 20.9 | 74.6 | 4.5 | 64.4 | 3.9 | 4.3 | 1.2 | 25.7 | 0.6 |
| 6029002200 | 69.89 | 99.24 | 95-100% (highest scores) | 6537 | Kern | 23.8 | 71.4 | 4.8 | 75.8 | 3.3 | 19.2 | 0.3 | 0.3 | 1 |
| 6037205110 | 69.85 | 99.23 | 95-100% (highest scores) | 3766 | Los Angeles | 20.4 | 76.2 | 3.4 | 98.5 | 1.1 | 0.1 | 0.1 | 0.1 | 0.2 |
| 6037570502 | 69.77 | 99.22 | 95-100% (highest scores) | 6616 | Los Angeles | 17 | 76.9 | 6.1 | 54.8 | 11 | 13.9 | 0.3 | 17.7 | 2.3 |

| | | | | | | | | | | | | | | |
|---|---|---|---|---|---|---|---|---|---|---|---|---|---|---|
| 6037291210 | 69.62 | 99.21 | 95-100% (highest scores) | 4967 | Los Angeles | 14.7 | 75 | 10.3 | 62.6 | 5.6 | 13.5 | 0.1 | 16.5 | 1.6 |
| 6037219901 | 69.47 | 99.19 | 95-100% (highest scores) | 5234 | Los Angeles | 17.9 | 77.3 | 4.8 | 79.8 | 2.2 | 16 | 0.1 | 0.6 | 1.2 |
| 6037534202 | 69.37 | 99.18 | 95-100% (highest scores) | 5790 | Los Angeles | 19.2 | 77.3 | 3.5 | 95.6 | 3 | 0.7 | 0.1 | 0.3 | 0.2 |
| 6037540400 | 69.24 | 99.17 | 95-100% (highest scores) | 2384 | Los Angeles | 20.3 | 75.8 | 3.9 | 80.8 | 0.9 | 16.4 | 0.3 | 0.9 | 0.8 |
| 6065046700 | 69.15 | 99.16 | 95-100% (highest scores) | 4442 | Riverside | 18.3 | 64.8 | 16.9 | 55.6 | 24 | 14.6 | 0.2 | 3.2 | 2.4 |
| 6029002301 | 69.08 | 99.14 | 95-100% (highest scores) | 9743 | Kern | 19.6 | 73.1 | 7.3 | 85 | 9.4 | 3.4 | 0.5 | 0.9 | 0.9 |
| 6071002501 | 68.99 | 99.13 | 95-100% (highest scores) | 5840 | San Bernardino | 16.8 | 77.4 | 5.8 | 88.5 | 7.6 | 1.8 | 0.1 | 1.4 | 0.7 |
| 6019008502 | 68.98 | 99.12 | 95-100% (highest scores) | 7929 | Fresno | 21.3 | 74.1 | 4.6 | 97.5 | 1.5 | 0.1 | 0.1 | 0.5 | 0.2 |
| 6019000502 | 68.97 | 99.10 | 95-100% (highest scores) | 3606 | Fresno | 20.5 | 70.8 | 8.7 | 71.5 | 13.9 | 5.9 | 0.5 | 6.9 | 1.3 |
| 6037242100 | 68.88 | 99.09 | 95-100% (highest scores) | 2714 | Los Angeles | 24.5 | 72.1 | 3.4 | 66.6 | 0.4 | 31.4 | 0.1 | 0.4 | 1 |
| 6037203500 | 68.82 | 99.08 | 95-100% (highest scores) | 3064 | Los Angeles | 16.2 | 74.5 | 9.3 | 85.1 | 2.4 | 0.8 | 0.2 | 10.7 | 0.9 |
| 6037302401 | 68.65 | 99.07 | 95-100% (highest scores) | 5944 | Los Angeles | 9.8 | 75.5 | 14.7 | 37.3 | 41.2 | 1.9 | 0.1 | 17 | 2.5 |
| 6067005301 | 68.64 | 99.05 | 95-100% (highest scores) | 1823 | Sacramento | 10.6 | 85.5 | 3.9 | 20.1 | 33.1 | 35.1 | 2.1 | 4.1 | 5.5 |
| 6037204820 | 68.47 | 99.04 | 95-100% (highest scores) | 2274 | Los Angeles | 16.8 | 71.6 | 11.6 | 97.9 | 0.8 | 0 | 0.3 | 0.9 | 0.1 |
| 6037532302 | 68.30 | 99.03 | 95-100% (highest scores) | 4707 | Los Angeles | 16.2 | 74.1 | 9.7 | 95.8 | 2.5 | 0.7 | 0.3 | 0.5 | 0.3 |
| 6073004900 | 68.27 | 99.02 | 95-100% (highest scores) | 5028 | San Diego | 17.3 | 75.1 | 7.6 | 90.4 | 3.4 | 4.7 | 0.1 | 0.7 | 0.7 |
| 6037229420 | 68.25 | 99.00 | 95-100% (highest scores) | 4729 | Los Angeles | 19.7 | 76.6 | 3.7 | 87.4 | 0.3 | 11.4 | 0.1 | 0.1 | 0.6 |
| 6037541001 | 68.24 | 98.99 | 95-100% (highest scores) | 1164 | Los Angeles | 12.6 | 72.5 | 14.9 | 43.8 | 2.7 | 47.8 | 0.1 | 3.5 | 2.1 |
| 6099002200 | 68.22 | 98.98 | 95-100% (highest scores) | 6223 | Stanislaus | 19.7 | 73.5 | 6.8 | 67.5 | 18.3 | 4.2 | 0.7 | 7.5 | 1.9 |
| 6037534302 | 67.96 | 98.97 | 95-100% (highest scores) | 3673 | Los Angeles | 18.8 | 77.6 | 3.6 | 96.6 | 1.5 | 1.3 | 0.1 | 0.4 | 0.1 |
| 6073003902 | 67.79 | 98.95 | 95-100% (highest scores) | 4927 | San Diego | 18.8 | 75.8 | 5.4 | 88.7 | 2.9 | 6.3 | 0.2 | 1.1 | 0.6 |
| 6037239701 | 67.77 | 98.94 | 95-100% (highest scores) | 4261 | Los Angeles | 20.6 | 74.1 | 5.3 | 76.8 | 0.7 | 21.5 | 0.1 | 0.3 | 0.7 |
| 6077002300 | 67.75 | 98.93 | 95-100% (highest scores) | 5020 | San Joaquin | 19.6 | 71.3 | 9.1 | 78.7 | 3.3 | 6.9 | 0.3 | 9.1 | 1.7 |
| 6037570301 | 67.72 | 98.92 | 95-100% (highest scores) | 7330 | Los Angeles | 17.5 | 78 | 4.5 | 64.5 | 7.1 | 17.7 | 0.2 | 8.9 | 1.6 |
| 6071012400 | 67.63 | 98.90 | 95-100% (highest scores) | 3617 | San Bernardino | 17.1 | 75.1 | 7.8 | 80.7 | 8.9 | 6 | 0.2 | 3.5 | 0.7 |
| 6037128302 | 67.55 | 98.89 | 95-100% (highest scores) | 4688 | Los Angeles | 15 | 79.7 | 5.3 | 77.8 | 13 | 3.9 | 0.2 | 3.6 | 1.4 |
| 6037242700 | 67.52 | 98.88 | 95-100% (highest scores) | 5273 | Los Angeles | 20.1 | 74.6 | 5.3 | 72.3 | 0.4 | 25.7 | 0.1 | 0.4 | 1.1 |
| 6065031300 | 67.44 | 98.86 | 95-100% (highest scores) | 2651 | Riverside | 16.4 | 74.4 | 9.2 | 92.7 | 2.8 | 1.9 | 0.9 | 1.2 | 0.4 |
| 6071007000 | 67.44 | 98.85 | 95-100% (highest scores) | 7898 | San Bernardino | 20.2 | 73 | 6.8 | 87 | 6.7 | 3.9 | 0.2 | 1.1 | 1.1 |
| 6037533001 | 67.42 | 98.84 | 95-100% (highest scores) | 4527 | Los Angeles | 20.5 | 74.2 | 5.3 | 95 | 0.8 | 3.5 | 0.2 | 0.3 | 0.2 |
| 6037121222 | 67.39 | 98.83 | 95-100% (highest scores) | 5293 | Los Angeles | 19.2 | 75.9 | 4.9 | 85 | 6.5 | 3.1 | 0.1 | 4.4 | 0.9 |
| 6037532800 | 67.31 | 98.81 | 95-100% (highest scores) | 4409 | Los Angeles | 21.5 | 74.1 | 4.4 | 91.5 | 0.4 | 7.6 | 0 | 0.3 | 0.2 |
| 6037239601 | 67.30 | 98.80 | 95-100% (highest scores) | 3755 | Los Angeles | 21.9 | 74.2 | 3.9 | 82.2 | 0.3 | 16.4 | 0.2 | 0.2 | 0.6 |
| 6037575401 | 67.20 | 98.79 | 95-100% (highest scores) | 5155 | Los Angeles | 19.8 | 76.5 | 3.7 | 76.9 | 5.7 | 11.5 | 0.2 | 4.5 | 1.3 |
| 6077002401 | 67.08 | 98.78 | 95-100% (highest scores) | 5001 | San Joaquin | 17.1 | 73.4 | 9.5 | 63.5 | 2.8 | 6.8 | 0.1 | 25.1 | 1.6 |
| 6037534201 | 67.05 | 98.76 | 95-100% (highest scores) | 4439 | Los Angeles | 20 | 73.6 | 6.4 | 95.4 | 2.7 | 0.8 | 0.3 | 0.6 | 0.2 |
| 6037122410 | 66.93 | 98.75 | 95-100% (highest scores) | 3794 | Los Angeles | 17.2 | 75.2 | 7.6 | 83.2 | 7.6 | 4.6 | 0 | 3.3 | 1.2 |
| 6037239702 | 66.87 | 98.74 | 95-100% (highest scores) | 3927 | Los Angeles | 19.9 | 74.5 | 5.6 | 68.6 | 0.9 | 29 | 0.1 | 0 | 1.4 |
| 6037572800 | 66.79 | 98.73 | 95-100% (highest scores) | 839 | Los Angeles | 15.6 | 80.5 | 3.9 | 19 | 25.3 | 38.6 | 1.5 | 9.4 | 6.2 |
| 6073003601 | 66.76 | 98.71 | 95-100% (highest scores) | 3250 | San Diego | 19.5 | 75.1 | 5.4 | 89.6 | 2.9 | 5.5 | 0 | 1.5 | 0.5 |
| 6037228100 | 66.68 | 98.70 | 95-100% (highest scores) | 4916 | Los Angeles | 20.1 | 75.8 | 4.1 | 91.3 | 0.4 | 7.3 | 0.1 | 0.1 | 0.8 |
| 6037292000 | 66.67 | 98.69 | 95-100% (highest scores) | 6543 | Los Angeles | 17.5 | 76.4 | 6.1 | 59.7 | 11 | 13.2 | 0.1 | 14.2 | 1.8 |
| 6037434001 | 66.54 | 98.68 | 95-100% (highest scores) | 4395 | Los Angeles | 15.7 | 77 | 7.3 | 87.3 | 2.9 | 0.3 | 0.1 | 9.1 | 0.3 |
| 6037122122 | 66.51 | 98.66 | 95-100% (highest scores) | 2439 | Los Angeles | 15.9 | 77.4 | 6.7 | 80.3 | 12.6 | 4.4 | 0.3 | 1.7 | 0.6 |
| 6099001500 | 66.48 | 98.65 | 95-100% (highest scores) | 6551 | Stanislaus | 14.9 | 72 | 13.1 | 54.9 | 31 | 4.6 | 0.4 | 6.4 | 2.7 |
| 6037242600 | 66.48 | 98.64 | 95-100% (highest scores) | 4409 | Los Angeles | 27.2 | 70.1 | 2.7 | 59.9 | 0.9 | 38.2 | 0.1 | 0.2 | 0.7 |
| 6077000900 | 66.46 | 98.63 | 95-100% (highest scores) | 5859 | San Joaquin | 17.7 | 73.8 | 8.5 | 49.6 | 30.6 | 6.7 | 0.9 | 8.5 | 3.6 |
| 6037228900 | 66.42 | 98.61 | 95-100% (highest scores) | 3216 | Los Angeles | 20.7 | 75 | 4.3 | 86.1 | 0.5 | 9.8 | 0.2 | 2.9 | 0.5 |
| 6037433302 | 66.41 | 98.60 | 95-100% (highest scores) | 1595 | Los Angeles | 19.3 | 73.4 | 7.3 | 82.6 | 3.3 | 0.3 | 0.3 | 13.1 | 0.4 |
| 6099001400 | 66.39 | 98.59 | 95-100% (highest scores) | 6430 | Stanislaus | 14.7 | 71.7 | 13.6 | 32.2 | 52.3 | 3.9 | 0.8 | 6.6 | 4.2 |
| 6099002402 | 66.28 | 98.57 | 95-100% (highest scores) | 5559 | Stanislaus | 21.7 | 72.9 | 5.4 | 83.1 | 12.9 | 0.8 | 0.2 | 1.4 | 1.7 |
| 6071005600 | 66.14 | 98.56 | 95-100% (highest scores) | 7101 | San Bernardino | 21.2 | 74.7 | 4.1 | 73.8 | 8.5 | 13.4 | 0.1 | 2.9 | 1.2 |
| 6019003001 | 66.11 | 98.55 | 95-100% (highest scores) | 3175 | Fresno | 20 | 74.3 | 5.7 | 48.8 | 12.2 | 5.9 | 1.2 | 30 | 1.9 |
| 6037402304 | 66.06 | 98.54 | 95-100% (highest scores) | 3848 | Los Angeles | 20.6 | 75.4 | 4 | 90 | 3.8 | 2.7 | 0.3 | 2.8 | 0.5 |
| 6037122420 | 66.04 | 98.52 | 95-100% (highest scores) | 5050 | Los Angeles | 16.3 | 76.5 | 7.2 | 79.9 | 9.3 | 3.1 | 0.1 | 6.4 | 1.2 |
| 6037536103 | 66.03 | 98.51 | 95-100% (highest scores) | 5516 | Los Angeles | 15.4 | 77.1 | 7.5 | 94.6 | 3.7 | 0.5 | 0.3 | 0.6 | 0.2 |
| 6037199700 | 66.03 | 98.50 | 95-100% (highest scores) | 3411 | Los Angeles | 13.1 | 78.2 | 8.7 | 69.4 | 11 | 0.8 | 0.2 | 18 | 0.6 |
| 6019006802 | 66.01 | 98.49 | 95-100% (highest scores) | 4019 | Fresno | 18.6 | 71.9 | 9.5 | 87.2 | 10 | 0.1 | 0.2 | 2.2 | 0.2 |
| 6029002100 | 66.00 | 98.47 | 95-100% (highest scores) | 3852 | Kern | 20.7 | 72.9 | 6.4 | 83.4 | 4.8 | 9.7 | 1 | 0.3 | 0.9 |
| 6037219902 | 65.96 | 98.46 | 95-100% (highest scores) | 4113 | Los Angeles | 14 | 77.7 | 8.3 | 72.2 | 3.5 | 20.6 | 0.1 | 1.7 | 1.8 |
| 6037206300 | 65.94 | 98.45 | 95-100% (highest scores) | 7540 | Los Angeles | 2 | 89.1 | 8.9 | 24.9 | 16.7 | 52.8 | 1 | 2.3 | 2.2 |
| 6037123206 | 65.93 | 98.44 | 95-100% (highest scores) | 2945 | Los Angeles | 14.7 | 77.6 | 7.7 | 85 | 8.7 | 2.4 | 0.1 | 3.2 | 0.6 |
| 6077000600 | 65.82 | 98.42 | 95-100% (highest scores) | 2279 | San Joaquin | 19.9 | 74.7 | 5.4 | 74.6 | 6 | 5.5 | 0.7 | 11.5 | 1.8 |
| 6065030104 | 65.81 | 98.41 | 95-100% (highest scores) | 6922 | Riverside | 17.3 | 77 | 5.7 | 62.1 | 18.7 | 8.7 | 0.3 | 8.5 | 1.7 |
| 6071004004 | 65.79 | 98.40 | 95-100% (highest scores) | 5076 | San Bernardino | 16.9 | 75.9 | 7.2 | 71 | 20.6 | 3.3 | 0.3 | 3.5 | 1.3 |
| 6037540901 | 65.75 | 98.39 | 95-100% (highest scores) | 4994 | Los Angeles | 14.8 | 74.4 | 10.8 | 64.4 | 1.8 | 32.2 | 0.1 | 0.4 | 1.1 |

| | | | | | | | | | | | | | | |
|---|---|---|---|---|---|---|---|---|---|---|---|---|---|---|
| 6037532603 | 65.70 | 98.37 | 95-100% (highest scores) | 3319 | Los Angeles | 18.9 | 75.6 | 5.5 | 98 | 0.9 | 0.1 | 0.1 | 0.6 | 0.4 |
| 6029002400 | 65.67 | 98.36 | 95-100% (highest scores) | 7478 | Kern | 23.1 | 71.6 | 5.3 | 70.8 | 18.4 | 5.3 | 0.6 | 3.1 | 1.8 |
| 6065042505 | 65.65 | 98.35 | 95-100% (highest scores) | 3639 | Riverside | 23.1 | 72.3 | 4.6 | 80.1 | 8.9 | 6.8 | 0.2 | 2.4 | 1.6 |
| 6071002204 | 65.53 | 98.34 | 95-100% (highest scores) | 6139 | San Bernardino | 19.2 | 76.1 | 4.7 | 78.5 | 11.6 | 4.9 | 0.2 | 4.1 | 0.7 |
| 6037239502 | 65.46 | 98.32 | 95-100% (highest scores) | 3372 | Los Angeles | 18.8 | 75.8 | 5.4 | 76.3 | 0.2 | 22.3 | 0.2 | 0.1 | 0.8 |
| 6019003805 | 65.41 | 98.31 | 95-100% (highest scores) | 6852 | Fresno | 18.4 | 74.7 | 6.9 | 56.2 | 18.9 | 10.2 | 1 | 11 | 2.7 |
| 6037553601 | 65.37 | 98.30 | 95-100% (highest scores) | 4750 | Los Angeles | 18.1 | 77.1 | 4.8 | 75 | 4.6 | 15.8 | 0.1 | 3.2 | 1.2 |
| 6037402804 | 65.36 | 98.28 | 95-100% (highest scores) | 4085 | Los Angeles | 19.5 | 76.8 | 3.7 | 79.2 | 4.5 | 3.5 | 0.2 | 11.6 | 1.1 |
| 6019001800 | 65.35 | 98.27 | 95-100% (highest scores) | 4615 | Fresno | 15.2 | 72.3 | 12.5 | 60.6 | 32 | 1.1 | 0.7 | 4.3 | 1.2 |
| 6071001813 | 65.35 | 98.26 | 95-100% (highest scores) | 4576 | San Bernardino | 19.3 | 75.7 | 5 | 91.6 | 3.3 | 3 | 0 | 1.2 | 0.9 |
| 6037534301 | 65.29 | 98.25 | 95-100% (highest scores) | 4636 | Los Angeles | 18.5 | 76 | 5.5 | 95 | 2.7 | 1 | 0.1 | 0.6 | 0.6 |
| 6037206200 | 65.26 | 98.23 | 95-100% (highest scores) | 3386 | Los Angeles | 3.1 | 71.3 | 25.6 | 19.5 | 12.2 | 25.9 | 0.4 | 39.7 | 2.2 |
| 6037432801 | 65.18 | 98.22 | 95-100% (highest scores) | 2568 | Los Angeles | 10.9 | 61.8 | 27.3 | 59.3 | 3.3 | 0.1 | 0.4 | 36.8 | 0.2 |
| 6037601600 | 65.05 | 98.21 | 95-100% (highest scores) | 4375 | Los Angeles | 17.3 | 75.4 | 7.3 | 92.5 | 2.5 | 2.2 | 0 | 2.2 | 0.5 |
| 6037229410 | 65.00 | 98.20 | 95-100% (highest scores) | 3343 | Los Angeles | 19.5 | 75.5 | 5 | 83.6 | 1 | 14.4 | 0.1 | 0.4 | 0.5 |
| 6037601401 | 64.99 | 98.18 | 95-100% (highest scores) | 4683 | Los Angeles | 13.1 | 80.6 | 6.3 | 58.9 | 5.1 | 32.4 | 0.3 | 1.9 | 1.4 |
| 6037239602 | 64.92 | 98.17 | 95-100% (highest scores) | 3313 | Los Angeles | 19 | 76.4 | 4.6 | 77.1 | 0.7 | 20.6 | 0.4 | 0.1 | 1 |
| 6037127400 | 64.88 | 98.16 | 95-100% (highest scores) | 5818 | Los Angeles | 16.9 | 78.2 | 4.9 | 73.2 | 15.3 | 5 | 0.1 | 4.8 | 1.5 |
| 6037302302 | 64.86 | 98.15 | 95-100% (highest scores) | 4895 | Los Angeles | 10.1 | 76.5 | 13.4 | 34.4 | 44.6 | 1.7 | 0.3 | 16.9 | 2.2 |
| 6037228800 | 64.82 | 98.13 | 95-100% (highest scores) | 5575 | Los Angeles | 20.7 | 75 | 4.3 | 88.1 | 0.6 | 9.1 | 0 | 1.5 | 0.7 |
| 6071005500 | 64.69 | 98.12 | 95-100% (highest scores) | 8618 | San Bernardino | 23.8 | 72.5 | 3.7 | 73.6 | 7.8 | 14.9 | 0.3 | 1.4 | 2 |
| 6037533002 | 64.65 | 98.11 | 95-100% (highest scores) | 2822 | Los Angeles | 19.2 | 74.5 | 6.3 | 97.3 | 1.2 | 1 | 0.1 | 0.1 | 0.3 |
| 6037543100 | 64.64 | 98.10 | 95-100% (highest scores) | 6759 | Los Angeles | 15.1 | 73.5 | 11.4 | 49.6 | 0.7 | 47.9 | 0.2 | 0.6 | 1 |
| 6037575801 | 64.47 | 98.08 | 95-100% (highest scores) | 2446 | Los Angeles | 19.9 | 77.1 | 3 | 79.3 | 9.5 | 6.9 | 0.5 | 2.5 | 1.3 |
| 6077001500 | 64.46 | 98.07 | 95-100% (highest scores) | 8384 | San Joaquin | 19.6 | 72.9 | 7.5 | 58.8 | 21.8 | 5.6 | 1 | 10.3 | 2.6 |
| 6037532900 | 64.43 | 98.06 | 95-100% (highest scores) | 6681 | Los Angeles | 19.7 | 75.6 | 4.7 | 92.7 | 0.3 | 6.5 | 0.1 | 0.1 | 0.3 |
| 6029002302 | 64.38 | 98.05 | 95-100% (highest scores) | 3378 | Kern | 23.2 | 69.9 | 6.9 | 94 | 3 | 1.8 | 0.4 | 0.5 | 0.4 |
| 6037291130 | 64.33 | 98.03 | 95-100% (highest scores) | 3582 | Los Angeles | 14.5 | 74.6 | 10.9 | 64 | 4.8 | 18.6 | 0 | 11.1 | 1.5 |
| 6037553701 | 64.32 | 98.02 | 95-100% (highest scores) | 4176 | Los Angeles | 20 | 74.7 | 5.3 | 93 | 3.3 | 2.5 | 0.1 | 0.5 | 0.6 |
| 6037535101 | 64.30 | 98.01 | 95-100% (highest scores) | 7306 | Los Angeles | 18.3 | 75.8 | 5.9 | 82.7 | 0.5 | 16.2 | 0.1 | 0.1 | 0.5 |
| 6019002601 | 64.22 | 97.99 | 95-100% (highest scores) | 5821 | Fresno | 21.9 | 72.3 | 5.8 | 84.8 | 4.4 | 2.3 | 0.4 | 7 | 1 |
| 6071001309 | 64.22 | 97.98 | 95-100% (highest scores) | 4793 | San Bernardino | 17.3 | 75.7 | 7 | 78.5 | 11.2 | 5.8 | 0.1 | 3.1 | 1.4 |
| 6099001800 | 64.21 | 97.97 | 95-100% (highest scores) | 2196 | Stanislaus | 10.6 | 76.4 | 13 | 32.7 | 53.8 | 5.6 | 1.5 | 3 | 3.4 |
| 6037535200 | 64.19 | 97.96 | 95-100% (highest scores) | 5820 | Los Angeles | 19.6 | 75.4 | 5 | 80.6 | 0.6 | 17.9 | 0.2 | 0.2 | 0.5 |
| 6037203300 | 64.17 | 97.94 | 95-100% (highest scores) | 2607 | Los Angeles | 8.5 | 81.7 | 9.8 | 68.8 | 8.9 | 11 | 0.1 | 10.4 | 0.8 |
| 6037404703 | 64.09 | 97.93 | 95-100% (highest scores) | 3178 | Los Angeles | 18.3 | 74.8 | 6.9 | 88.6 | 2.7 | 0.8 | 0.2 | 7.3 | 0.4 |
| 6037242200 | 64.03 | 97.92 | 95-100% (highest scores) | 6554 | Los Angeles | 21.6 | 73.4 | 5 | 71.9 | 0.7 | 25.8 | 0.2 | 0.3 | 1 |
| 6037535603 | 64.01 | 97.91 | 95-100% (highest scores) | 3493 | Los Angeles | 18 | 77 | 5 | 96.1 | 2.1 | 1 | 0 | 0.7 | 0.1 |
| 6019001700 | 63.99 | 97.89 | 95-100% (highest scores) | 5701 | Fresno | 15.7 | 73 | 11.3 | 57.7 | 26.2 | 1.8 | 0.6 | 12.3 | 1.5 |
| 6037570202 | 63.99 | 97.88 | 95-100% (highest scores) | 6415 | Los Angeles | 16.2 | 78.2 | 5.6 | 62.5 | 8.2 | 16.8 | 0.2 | 10.2 | 2.1 |
| 6037541604 | 63.96 | 97.87 | 95-100% (highest scores) | 6207 | Los Angeles | 21.5 | 74.2 | 4.3 | 81.4 | 0.6 | 16.7 | 0.2 | 0.3 | 0.7 |
| 6037535300 | 63.92 | 97.86 | 95-100% (highest scores) | 6251 | Los Angeles | 18.3 | 75.8 | 5.9 | 91.6 | 1 | 7 | 0 | 0.1 | 0.3 |
| 6037123304 | 63.90 | 97.84 | 95-100% (highest scores) | 4687 | Los Angeles | 12.2 | 72.4 | 15.4 | 50.8 | 39.2 | 3.2 | 0.1 | 4.4 | 2.2 |
| 6037536102 | 63.90 | 97.83 | 95-100% (highest scores) | 3164 | Los Angeles | 12.2 | 72.2 | 15.6 | 74.1 | 17.8 | 1.8 | 0.2 | 5.3 | 0.8 |
| 6037237202 | 63.82 | 97.82 | 95-100% (highest scores) | 4388 | Los Angeles | 14.9 | 76.8 | 8.3 | 61.3 | 0.8 | 35.8 | 0.1 | 0.3 | 1.8 |
| 6065030400 | 63.80 | 97.81 | 95-100% (highest scores) | 6414 | Riverside | 18.7 | 73.4 | 7.9 | 78 | 7.2 | 11.5 | 0.4 | 1.5 | 1.4 |
| 6037542502 | 63.76 | 97.79 | 95-100% (highest scores) | 4284 | Los Angeles | 18.4 | 75.1 | 6.5 | 57.1 | 0.6 | 40.4 | 0.6 | 0.7 | 0.6 |
| 6037127104 | 63.75 | 97.78 | 95-100% (highest scores) | 3573 | Los Angeles | 13.7 | 77.8 | 8.5 | 52.5 | 32.4 | 4.6 | 0.2 | 8 | 2.4 |
| 6019002800 | 63.65 | 97.77 | 95-100% (highest scores) | 5205 | Fresno | 23.3 | 71.5 | 5.2 | 63.1 | 8 | 4.5 | 0.6 | 22.4 | 1.4 |
| 6037433901 | 63.58 | 97.76 | 95-100% (highest scores) | 5593 | Los Angeles | 18 | 77 | 5 | 76.7 | 2.3 | 0.5 | 0.1 | 19.8 | 0.7 |
| 6071004003 | 63.54 | 97.74 | 95-100% (highest scores) | 6178 | San Bernardino | 18.4 | 76.1 | 5.5 | 83.6 | 12.4 | 2 | 0.3 | 0.9 | 0.8 |
| 6037302505 | 63.53 | 97.73 | 95-100% (highest scores) | 3749 | Los Angeles | 11.8 | 75.8 | 12.4 | 43.5 | 38.8 | 1.5 | 0.1 | 13.3 | 2.7 |
| 6077002000 | 63.53 | 97.72 | 95-100% (highest scores) | 3977 | San Joaquin | 18.5 | 70.3 | 11.2 | 75.9 | 8.6 | 11.9 | 0.3 | 1.9 | 1.5 |
| 6037188100 | 63.51 | 97.70 | 95-100% (highest scores) | 4076 | Los Angeles | 10.9 | 78.2 | 10.9 | 55.8 | 27.3 | 2.3 | 0.1 | 12.8 | 1.7 |
| 6065040204 | 63.49 | 97.69 | 95-100% (highest scores) | 3716 | Riverside | 21.1 | 75.1 | 3.8 | 84.7 | 7.4 | 6.1 | 0.2 | 1 | 0.6 |
| 6037240500 | 63.49 | 97.68 | 95-100% (highest scores) | 5655 | Los Angeles | 19.3 | 75 | 5.7 | 62.4 | 0.6 | 35.6 | 0 | 0.2 | 1.1 |
| 6071004104 | 63.49 | 97.67 | 95-100% (highest scores) | 5257 | San Bernardino | 18.2 | 76 | 5.8 | 81.8 | 10.9 | 5.1 | 0.4 | 0.7 | 1.1 |
| 6037602509 | 63.43 | 97.65 | 95-100% (highest scores) | 4118 | Los Angeles | 17.8 | 76.7 | 5.5 | 63.8 | 4.1 | 20 | 0.2 | 10.3 | 1.7 |
| 6047001005 | 63.40 | 97.64 | 95-100% (highest scores) | 2406 | Merced | 18.2 | 73.2 | 8.6 | 51.9 | 30.5 | 8 | 0.7 | 6.2 | 2.8 |
| 6099003700 | 63.36 | 97.63 | 95-100% (highest scores) | 4796 | Stanislaus | 16.3 | 75.2 | 8.5 | 51.7 | 38.8 | 0.8 | 0.7 | 5.5 | 2.5 |
| 6077002402 | 63.36 | 97.62 | 95-100% (highest scores) | 2219 | San Joaquin | 18.4 | 72 | 9.6 | 69.8 | 4.5 | 10 | 0.2 | 13.4 | 2.1 |
| 6037239320 | 63.31 | 97.60 | 95-100% (highest scores) | 3444 | Los Angeles | 18.1 | 77.1 | 4.8 | 85.2 | 0.5 | 13.1 | 0.1 | 0.2 | 0.8 |
| 6037542601 | 63.25 | 97.59 | 95-100% (highest scores) | 3016 | Los Angeles | 21.7 | 73.1 | 5.2 | 85.1 | 0.6 | 13.7 | 0.1 | 0 | 0.4 |
| 6037122121 | 63.23 | 97.58 | 95-100% (highest scores) | 2833 | Los Angeles | 14 | 78.2 | 7.8 | 79.4 | 10 | 1.3 | 0 | 8.3 | 1 |
| 6037219800 | 63.22 | 97.57 | 95-100% (highest scores) | 3310 | Los Angeles | 15.6 | 78.8 | 5.6 | 74.3 | 1.5 | 21.5 | 0.2 | 1.1 | 1.4 |
| 6037541603 | 63.20 | 97.55 | 95-100% (highest scores) | 2983 | Los Angeles | 20.9 | 72.4 | 6.7 | 79.1 | 1.1 | 19 | 0 | 0.1 | 0.6 |

| | | | | | | | | | | | | | | |
|---|---|---|---|---|---|---|---|---|---|---|---|---|---|---|
| 6037402303 | 63.15 | 97.54 | 95-100% (highest scores) | 3996 | Los Angeles | 17.2 | 75.6 | 7.2 | 75.5 | 13.6 | 6 | 0.5 | 3.3 | 1.2 |
| 6065042209 | 63.05 | 97.53 | 95-100% (highest scores) | 4579 | Riverside | 10.5 | 83.9 | 5.6 | 40.4 | 24.3 | 12.9 | 0.5 | 18.6 | 3.3 |
| 6037433801 | 63.04 | 97.52 | 95-100% (highest scores) | 6197 | Los Angeles | 18.7 | 75.2 | 6.1 | 90.5 | 2.4 | 0.1 | 0.1 | 6.3 | 0.5 |
| 6037601502 | 63.03 | 97.50 | 95-100% (highest scores) | 3963 | Los Angeles | 18.7 | 76 | 5.3 | 94.4 | 1.9 | 1.9 | 0.1 | 1.4 | 0.3 |
| 6037121020 | 62.91 | 97.49 | 95-100% (highest scores) | 3741 | Los Angeles | 12.5 | 78.4 | 9.1 | 59.6 | 26.8 | 1.6 | 0.1 | 9.9 | 2 |
| 6037572301 | 62.87 | 97.48 | 95-100% (highest scores) | 3833 | Los Angeles | 16.3 | 76.2 | 7.5 | 58.8 | 4.1 | 8 | 0.1 | 26.8 | 2.2 |
| 6037204700 | 62.82 | 97.47 | 95-100% (highest scores) | 4972 | Los Angeles | 16.2 | 74.8 | 9 | 97.2 | 1.5 | 0.2 | 0 | 0.9 | 0.2 |
| 6037535606 | 62.70 | 97.45 | 95-100% (highest scores) | 1860 | Los Angeles | 20.2 | 74.3 | 5.5 | 98 | 1.2 | 0.3 | 0.1 | 0.1 | 0.3 |
| 6037239330 | 62.67 | 97.44 | 95-100% (highest scores) | 2879 | Los Angeles | 20.3 | 75.3 | 4.4 | 86.1 | 0.6 | 12.9 | 0.1 | 0 | 0.2 |
| 6019002400 | 62.67 | 97.43 | 95-100% (highest scores) | 4959 | Fresno | 20.8 | 72.9 | 6.3 | 67.5 | 9.2 | 4.5 | 1.2 | 16.4 | 1.3 |
| 6099000304 | 62.64 | 97.41 | 95-100% (highest scores) | 5003 | Stanislaus | 18.1 | 75.1 | 6.8 | 72.8 | 22.6 | 1.2 | 0.7 | 0.8 | 1.8 |
| 6037122000 | 62.60 | 97.40 | 95-100% (highest scores) | 5446 | Los Angeles | 10.1 | 76 | 13.9 | 36.5 | 41.5 | 1.2 | 0.4 | 18.2 | 2.3 |
| 6037534101 | 62.48 | 97.39 | 95-100% (highest scores) | 2295 | Los Angeles | 19.2 | 77.2 | 3.6 | 95.7 | 2.2 | 0.2 | 0.4 | 0.8 | 0.6 |
| 6077003802 | 62.45 | 97.38 | 95-100% (highest scores) | 6519 | San Joaquin | 17.7 | 76.7 | 5.6 | 39.2 | 14.2 | 18 | 0.2 | 23.8 | 4.5 |
| 6037602801 | 62.42 | 97.36 | 95-100% (highest scores) | 3819 | Los Angeles | 18.8 | 75.4 | 5.8 | 62.2 | 1.1 | 34.1 | 0.1 | 0.7 | 1.7 |
| 6099002501 | 62.39 | 97.35 | 95-100% (highest scores) | 7036 | Stanislaus | 18.2 | 77.4 | 4.4 | 68.6 | 18.7 | 2.8 | 0.3 | 8.2 | 1.4 |
| 6077003900 | 62.38 | 97.34 | 95-100% (highest scores) | 1749 | San Joaquin | 15.4 | 73.4 | 11.2 | 72.6 | 25.7 | 0.3 | 0.3 | 0.6 | 0.5 |
| 6019001410 | 62.37 | 97.33 | 95-100% (highest scores) | 9109 | Fresno | 18.4 | 74.1 | 7.5 | 51.8 | 12.5 | 5.2 | 0.4 | 28.2 | 1.9 |
| 6067000700 | 62.37 | 97.31 | 95-100% (highest scores) | 2806 | Sacramento | 0 | 85.2 | 14.8 | 21.6 | 33.2 | 24.5 | 1.6 | 13.7 | 5.4 |
| 6071002110 | 62.37 | 97.30 | 95-100% (highest scores) | 7020 | San Bernardino | 12.6 | 81.9 | 5.5 | 39.8 | 30.1 | 15.2 | 0.2 | 11.2 | 3.4 |
| 6037532303 | 62.34 | 97.29 | 95-100% (highest scores) | 4464 | Los Angeles | 13.8 | 73.5 | 12.7 | 94.5 | 2.7 | 0.3 | 0.2 | 1.8 | 0.4 |
| 6037123010 | 62.33 | 97.28 | 95-100% (highest scores) | 4580 | Los Angeles | 18.2 | 76.7 | 5.1 | 90.4 | 5.2 | 0.9 | 0.2 | 2.2 | 1 |
| 6037296210 | 62.31 | 97.26 | 95-100% (highest scores) | 3019 | Los Angeles | 18.6 | 74.7 | 6.7 | 83.2 | 6.3 | 7.1 | 0.3 | 1.4 | 1.7 |
| 6037124103 | 62.29 | 97.25 | 95-100% (highest scores) | 2030 | Los Angeles | 14.9 | 77.9 | 7.2 | 75 | 18.3 | 1.8 | 0.1 | 3.6 | 1.2 |
| 6071005400 | 62.28 | 97.24 | 95-100% (highest scores) | 6590 | San Bernardino | 19.1 | 73.5 | 7.4 | 66.3 | 12.4 | 17 | 0.5 | 1.6 | 2.2 |
| 6037104703 | 62.25 | 97.23 | 95-100% (highest scores) | 2397 | Los Angeles | 19.5 | 76.2 | 4.3 | 94.5 | 2.9 | 1.8 | 0 | 0.3 | 0.6 |
| 6037239310 | 62.24 | 97.21 | 95-100% (highest scores) | 3996 | Los Angeles | 20.7 | 74.1 | 5.2 | 80.5 | 0.6 | 17.4 | 0.3 | 0.3 | 1 |
| 6037575802 | 62.21 | 97.20 | 95-100% (highest scores) | 5167 | Los Angeles | 19.3 | 77.2 | 3.5 | 76.6 | 8.5 | 10.1 | 0.4 | 3.2 | 1.3 |
| 6037541002 | 62.20 | 97.19 | 95-100% (highest scores) | 3209 | Los Angeles | 11.2 | 72 | 16.8 | 32.2 | 12.9 | 49.1 | 0.3 | 2.6 | 2.9 |
| 6037229300 | 62.20 | 97.17 | 95-100% (highest scores) | 5498 | Los Angeles | 21.2 | 75.2 | 3.6 | 87.7 | 1 | 10.6 | 0 | 0.2 | 0.4 |
| 6037602600 | 62.19 | 97.16 | 95-100% (highest scores) | 7910 | Los Angeles | 10.8 | 72.8 | 16.4 | 16.7 | 3.1 | 74.3 | 0.2 | 3.6 | 2.2 |
| 6037570402 | 62.14 | 97.15 | 95-100% (highest scores) | 3496 | Los Angeles | 13.1 | 78.6 | 8.3 | 44.7 | 6.8 | 37.8 | 0.2 | 8.1 | 2.4 |
| 6037224010 | 62.14 | 97.14 | 95-100% (highest scores) | 2433 | Los Angeles | 13.6 | 77.6 | 8.8 | 71.3 | 7.7 | 14.1 | 0.4 | 5.4 | 1.1 |
| 6071001400 | 62.13 | 97.12 | 95-100% (highest scores) | 2923 | San Bernardino | 15.1 | 74.2 | 10.7 | 63.5 | 22.9 | 7.1 | 0.1 | 4.8 | 1.6 |
| 6031001100 | 62.11 | 97.11 | 95-100% (highest scores) | 6613 | Kings | 20.4 | 71.6 | 8 | 72.8 | 13.2 | 9.2 | 0.8 | 2.1 | 2 |
| 6037294620 | 62.11 | 97.10 | 95-100% (highest scores) | 4219 | Los Angeles | 16.1 | 75.1 | 8.8 | 95.5 | 1.5 | 1.7 | 0 | 0.9 | 0.4 |
| 6037294900 | 62.08 | 97.09 | 95-100% (highest scores) | 3265 | Los Angeles | 20.3 | 74.5 | 5.2 | 88.6 | 3.6 | 4.6 | 0.2 | 2.5 | 0.6 |
| 6071001501 | 62.04 | 97.07 | 95-100% (highest scores) | 4052 | San Bernardino | 19.5 | 76.5 | 4 | 89.3 | 7.8 | 1 | 0 | 1 | 0.9 |
| 6037294830 | 61.94 | 97.06 | 95-100% (highest scores) | 3707 | Los Angeles | 19.4 | 74.2 | 6.4 | 90.1 | 3.1 | 3.9 | 0.4 | 1.3 | 1.3 |
| 6099001700 | 61.93 | 97.05 | 95-100% (highest scores) | 2589 | Stanislaus | 18.8 | 74.5 | 6.7 | 65 | 15.9 | 6.2 | 0.9 | 10 | 2 |
| 6099001601 | 61.91 | 97.04 | 95-100% (highest scores) | 4803 | Stanislaus | 19.4 | 75 | 5.6 | 70.5 | 12.9 | 4 | 0.2 | 10.3 | 2 |
| 6071005800 | 61.90 | 97.02 | 95-100% (highest scores) | 3981 | San Bernardino | 24.1 | 71.7 | 4.2 | 67.1 | 7.1 | 20.3 | 0.6 | 2.8 | 2.1 |
| 6037541100 | 61.88 | 97.01 | 95-100% (highest scores) | 3321 | Los Angeles | 15.6 | 74.9 | 9.5 | 49.8 | 0.8 | 47.9 | 0.2 | 0.5 | 0.8 |
| 6037533806 | 61.85 | 97.00 | 95-100% (highest scores) | 4165 | Los Angeles | 19.3 | 76 | 4.7 | 96 | 2.9 | 0.5 | 0.3 | 0 | 0.2 |
| 6037542402 | 61.84 | 96.99 | 95-100% (highest scores) | 3152 | Los Angeles | 16.2 | 75.6 | 8.2 | 55.4 | 1.5 | 39.6 | 0 | 2 | 1.5 |
| 6077002701 | 61.84 | 96.97 | 95-100% (highest scores) | 6409 | San Joaquin | 18.7 | 72.6 | 8.7 | 66.8 | 25 | 1.8 | 0.5 | 3.5 | 2.4 |
| 6037208000 | 61.81 | 96.96 | 95-100% (highest scores) | 6893 | Los Angeles | 14.6 | 80.6 | 4.8 | 71.3 | 7.5 | 4.6 | 0.1 | 15.2 | 1.3 |
| 6037229100 | 61.66 | 96.95 | 95-100% (highest scores) | 4557 | Los Angeles | 20 | 75.9 | 4.1 | 89.8 | 0.6 | 9.2 | 0 | 0 | 0.5 |
| 6037301602 | 61.64 | 96.94 | 95-100% (highest scores) | 3908 | Los Angeles | 10.3 | 78.9 | 10.8 | 42.6 | 38.1 | 2.2 | 0.1 | 13.9 | 3 |
| 6037533901 | 61.59 | 96.92 | 95-100% (highest scores) | 6065 | Los Angeles | 17.5 | 78.1 | 4.4 | 96.4 | 2.2 | 0.3 | 0.2 | 0.5 | 0.4 |
| 6001409000 | 61.56 | 96.91 | 95-100% (highest scores) | 3552 | Alameda | 17.2 | 74.3 | 8.5 | 48.8 | 1.7 | 43.3 | 0.1 | 4.3 | 1.8 |
| 6037541400 | 61.50 | 96.90 | 95-100% (highest scores) | 7312 | Los Angeles | 20 | 74.6 | 5.4 | 79.6 | 0.8 | 18.6 | 0.1 | 0.4 | 0.5 |
| 6037534102 | 61.47 | 96.88 | 95-100% (highest scores) | 6263 | Los Angeles | 19.1 | 76.6 | 4.3 | 96.7 | 1.9 | 0.3 | 0.1 | 0.7 | 0.3 |
| 6037573201 | 61.46 | 96.87 | 95-100% (highest scores) | 4930 | Los Angeles | 17.6 | 76.2 | 6.2 | 60.5 | 4.6 | 14 | 0.1 | 18.8 | 1.9 |
| 6037531301 | 61.45 | 96.86 | 95-100% (highest scores) | 5601 | Los Angeles | 19.1 | 73.6 | 7.3 | 98.6 | 0.8 | 0.4 | 0 | 0.1 | 0.1 |
| 6037553702 | 61.44 | 96.85 | 95-100% (highest scores) | 4902 | Los Angeles | 18.1 | 76.2 | 5.7 | 91.6 | 1.8 | 4.7 | 0 | 1.7 | 0.2 |
| 6037536104 | 61.42 | 96.83 | 95-100% (highest scores) | 4052 | Los Angeles | 18.7 | 74.5 | 6.8 | 91.5 | 4.6 | 2.1 | 0.1 | 1.2 | 0.5 |
| 6037535001 | 61.39 | 96.82 | 95-100% (highest scores) | 4325 | Los Angeles | 19.8 | 75.1 | 5.1 | 88.4 | 0.8 | 10.1 | 0 | 0 | 0.6 |
| 6037543000 | 61.35 | 96.81 | 95-100% (highest scores) | 4345 | Los Angeles | 14.5 | 72.9 | 12.6 | 41.6 | 0.5 | 55.4 | 0.1 | 0.3 | 2.1 |
| 6019000501 | 61.30 | 96.80 | 95-100% (highest scores) | 2815 | Fresno | 24.4 | 70.4 | 5.2 | 79.5 | 5.7 | 6.2 | 0.4 | 7 | 1.1 |
| 6099003802 | 61.27 | 96.78 | 95-100% (highest scores) | 5860 | Stanislaus | 19.8 | 72.2 | 8 | 74.4 | 20.9 | 1.1 | 0.5 | 1.8 | 1.3 |
| 6037404802 | 61.25 | 96.77 | 95-100% (highest scores) | 4335 | Los Angeles | 16.1 | 76.9 | 7 | 81.5 | 3.5 | 1 | 0.3 | 13.1 | 0.5 |
| 6037542401 | 61.23 | 96.76 | 95-100% (highest scores) | 4912 | Los Angeles | 16.8 | 74.1 | 9.1 | 56.1 | 0.8 | 40 | 0.1 | 1.7 | 1.4 |
| 6037199000 | 61.19 | 96.75 | 95-100% (highest scores) | 5066 | Los Angeles | 14.7 | 75.3 | 10 | 61.2 | 2.6 | 0.8 | 0.1 | 34.8 | 0.5 |
| 6037187102 | 61.18 | 96.73 | 95-100% (highest scores) | 3254 | Los Angeles | 11 | 77.4 | 11.6 | 60 | 16 | 1.4 | 0.1 | 21.1 | 1.3 |
| 6037553801 | 61.13 | 96.72 | 95-100% (highest scores) | 4174 | Los Angeles | 20.4 | 73.9 | 5.7 | 75.2 | 3.9 | 16.8 | 0.1 | 2.8 | 1.3 |

| | | | | | | | | | | | | | | |
|---|---|---|---|---|---|---|---|---|---|---|---|---|---|---|
| 6071001504 | 61.09 | 96.71 | 95-100% (highest scores) | 5676 | San Bernardino | 19.4 | 74.8 | 5.8 | 69.7 | 8 | 11.3 | 0.2 | 9.5 | 1.3 |
| 6037232500 | 61.01 | 96.70 | 95-100% (highest scores) | 4619 | Los Angeles | 15.8 | 75.2 | 9 | 56.9 | 0.6 | 40.8 | 0.2 | 0.2 | 1.4 |
| 6037404702 | 60.99 | 96.68 | 95-100% (highest scores) | 5882 | Los Angeles | 15.3 | 78.4 | 6.3 | 75.8 | 3.2 | 1.2 | 0.1 | 18.8 | 0.8 |
| 6099000803 | 60.92 | 96.67 | 95-100% (highest scores) | 4789 | Stanislaus | 17.5 | 69.5 | 13 | 50.7 | 33.6 | 5.3 | 0.6 | 6.2 | 3.7 |
| 6037241001 | 60.89 | 96.66 | 95-100% (highest scores) | 4285 | Los Angeles | 18.8 | 76.1 | 5.1 | 61.7 | 0.9 | 35.6 | 0.3 | 0.5 | 1.1 |
| 6037402702 | 60.81 | 96.65 | 95-100% (highest scores) | 6313 | Los Angeles | 21.9 | 75 | 3.1 | 86 | 4.8 | 5.7 | 0.2 | 2.3 | 1 |
| 6037240200 | 60.81 | 96.63 | 95-100% (highest scores) | 5252 | Los Angeles | 19.2 | 75.3 | 5.5 | 70.2 | 1.1 | 27.5 | 0.2 | 0.2 | 0.8 |
| 6071001803 | 60.80 | 96.62 | 95-100% (highest scores) | 2985 | San Bernardino | 11.5 | 71.2 | 17.3 | 55.6 | 30.9 | 6.7 | 0.4 | 5.5 | 0.8 |
| 6037530902 | 60.65 | 96.61 | 95-100% (highest scores) | 4160 | Los Angeles | 17.4 | 69.8 | 12.8 | 95.7 | 1.3 | 0.2 | 0.1 | 2.5 | 0.2 |
| 6037602002 | 60.64 | 96.59 | 95-100% (highest scores) | 3195 | Los Angeles | 16.2 | 78.4 | 5.4 | 76.8 | 3.8 | 14.1 | 0.1 | 4.2 | 1.1 |
| 6071007200 | 60.58 | 96.58 | 95-100% (highest scores) | 6798 | San Bernardino | 16.4 | 73.9 | 9.7 | 49.9 | 17.5 | 6.6 | 0.3 | 23.2 | 2.6 |
| 6037433102 | 60.51 | 96.57 | 95-100% (highest scores) | 5085 | Los Angeles | 16.5 | 76.4 | 7.1 | 60.4 | 2.2 | 0.1 | 0.1 | 36.6 | 0.6 |
| 6037550000 | 60.50 | 96.56 | 95-100% (highest scores) | 1146 | Los Angeles | 6.6 | 86.2 | 7.2 | 33.6 | 32.7 | 13.5 | 0.3 | 16.5 | 3.3 |
| 6037540000 | 60.44 | 96.54 | 95-100% (highest scores) | 6973 | Los Angeles | 19.1 | 75.9 | 5 | 90.6 | 1.6 | 5.5 | 0 | 1.6 | 0.6 |
| 6019004404 | 60.38 | 96.53 | 95-100% (highest scores) | 3556 | Fresno | 17.5 | 76.4 | 6.1 | 59.2 | 19 | 5.7 | 1.1 | 12.8 | 2.3 |
| 6037220100 | 60.35 | 96.52 | 95-100% (highest scores) | 2334 | Los Angeles | 10.9 | 69.5 | 19.6 | 28.7 | 4.5 | 58.3 | 0 | 6.1 | 2.4 |
| 6037540700 | 60.24 | 96.51 | 95-100% (highest scores) | 3014 | Los Angeles | 18.8 | 76 | 5.2 | 61.3 | 0.6 | 36.7 | 0.2 | 0.2 | 1 |
| 6037404701 | 60.18 | 96.49 | 95-100% (highest scores) | 5873 | Los Angeles | 15.4 | 76.9 | 7.7 | 82.3 | 2.9 | 0.5 | 0.1 | 13.7 | 0.4 |
| 6037531602 | 60.12 | 96.48 | 95-100% (highest scores) | 4494 | Los Angeles | 17.6 | 73.7 | 8.7 | 98.5 | 1.1 | 0.2 | 0 | 0.1 | 0.2 |
| 6037204910 | 60.12 | 96.47 | 95-100% (highest scores) | 3105 | Los Angeles | 18.3 | 73.9 | 7.8 | 96.6 | 1.5 | 0.3 | 0.3 | 0.7 | 0.5 |
| 6037543400 | 60.10 | 96.46 | 95-100% (highest scores) | 4090 | Los Angeles | 13.2 | 73.7 | 13.1 | 56.2 | 5.9 | 17.2 | 0.2 | 18.2 | 2.3 |
| 6037239801 | 60.09 | 96.44 | 95-100% (highest scores) | 3412 | Los Angeles | 19.4 | 75.5 | 5.1 | 75.2 | 0.4 | 23.6 | 0.1 | 0.1 | 0.6 |
| 6037553802 | 60.08 | 96.43 | 95-100% (highest scores) | 6342 | Los Angeles | 16.7 | 73.8 | 9.5 | 71.7 | 9.2 | 13.1 | 0.5 | 4.5 | 0.9 |
| 6037530500 | 60.01 | 96.42 | 95-100% (highest scores) | 4567 | Los Angeles | 14.6 | 74.4 | 11 | 98.1 | 0.9 | 0.1 | 0.1 | 0.4 | 0.4 |
| 6019008501 | 59.95 | 96.41 | 95-100% (highest scores) | 4585 | Fresno | 21.4 | 71.5 | 7.1 | 93.7 | 3.9 | 0.1 | 0.2 | 1.7 | 0.5 |
| 6037408800 | 59.87 | 96.39 | 95-100% (highest scores) | 3738 | Los Angeles | 16.2 | 77.8 | 6 | 71 | 11.3 | 7 | 0.2 | 9.4 | 1.2 |
| 6001409100 | 59.87 | 96.38 | 95-100% (highest scores) | 2255 | Alameda | 17 | 73.5 | 9.5 | 51.8 | 1.6 | 41 | 0.1 | 3.7 | 1.8 |
| 6065030103 | 59.83 | 96.37 | 95-100% (highest scores) | 2105 | Riverside | 14.3 | 76.3 | 9.4 | 65 | 24.4 | 4 | 0.7 | 3.2 | 2.6 |
| 6065041410 | 59.81 | 96.36 | 95-100% (highest scores) | 3288 | Riverside | 19.6 | 75 | 5.4 | 94.1 | 4.5 | 0.2 | 0.4 | 0.5 | 0.2 |
| 6037297110 | 59.81 | 96.34 | 95-100% (highest scores) | 4679 | Los Angeles | 13.7 | 78.3 | 8 | 64.5 | 20.4 | 8.2 | 0.4 | 4.1 | 2.3 |
| 6019002702 | 59.80 | 96.33 | 95-100% (highest scores) | 5882 | Fresno | 22 | 73.4 | 4.6 | 80.7 | 4.1 | 3 | 0.3 | 11 | 1 |
| 6037530601 | 59.78 | 96.32 | 95-100% (highest scores) | 3431 | Los Angeles | 15.8 | 75.4 | 8.8 | 95 | 1.7 | 0.4 | 0.1 | 2.2 | 0.6 |
| 6029002000 | 59.77 | 96.30 | 95-100% (highest scores) | 7111 | Kern | 20.7 | 69 | 10.3 | 57.5 | 9.3 | 28.3 | 0.6 | 2.4 | 1.8 |
| 6037541500 | 59.74 | 96.29 | 95-100% (highest scores) | 5836 | Los Angeles | 19.8 | 75.5 | 4.7 | 85.9 | 0.4 | 12.7 | 0 | 0.6 | 0.3 |
| 6037572500 | 59.69 | 96.28 | 95-100% (highest scores) | 3365 | Los Angeles | 15.9 | 64.6 | 19.5 | 39.5 | 11.1 | 26.9 | 0.5 | 18.5 | 3.5 |
| 6037104310 | 59.68 | 96.27 | 95-100% (highest scores) | 4921 | Los Angeles | 18.2 | 74.9 | 6.9 | 94 | 1.6 | 3.9 | 0.1 | 0.1 | 0.3 |
| 6065042508 | 59.68 | 96.25 | 95-100% (highest scores) | 4888 | Riverside | 19.9 | 76.6 | 3.5 | 72.4 | 9.8 | 12.2 | 0.2 | 3.3 | 2.1 |
| 6037241120 | 59.67 | 96.24 | 95-100% (highest scores) | 4564 | Los Angeles | 19.4 | 75.5 | 5.1 | 65.1 | 0.7 | 32.3 | 0.4 | 0.4 | 1.2 |
| 6037242300 | 59.66 | 96.23 | 95-100% (highest scores) | 4586 | Los Angeles | 20.8 | 74.6 | 4.6 | 71.4 | 0.5 | 26.7 | 0.2 | 0.1 | 1 |
| 6001408800 | 59.65 | 96.22 | 95-100% (highest scores) | 5547 | Alameda | 19 | 73.9 | 7.1 | 45.9 | 2.1 | 41.4 | 0.2 | 7.8 | 2.7 |
| 6029006201 | 59.60 | 96.20 | 95-100% (highest scores) | 2877 | Kern | 18.6 | 72.3 | 9.1 | 69.3 | 26.9 | 0.9 | 0.6 | 1.3 | 0.9 |
| 6037122200 | 59.48 | 96.19 | 95-100% (highest scores) | 4141 | Los Angeles | 15.9 | 77.4 | 6.7 | 86.4 | 8.9 | 0.7 | 0.1 | 3.1 | 0.8 |
| 6037543801 | 59.43 | 96.18 | 95-100% (highest scores) | 5263 | Los Angeles | 11 | 73.6 | 15.4 | 45.4 | 10.9 | 4.8 | 0.3 | 35.5 | 3 |
| 6073003901 | 59.42 | 96.17 | 95-100% (highest scores) | 4241 | San Diego | 19.7 | 75.7 | 4.6 | 86.5 | 1.8 | 10 | 0.4 | 0.8 | 0.6 |
| 6029004604 | 59.32 | 96.15 | 95-100% (highest scores) | 15845 | Kern | 14.7 | 81.7 | 3.6 | 69.7 | 7.8 | 11 | 0.3 | 10.2 | 1 |
| 6029002600 | 59.30 | 96.14 | 95-100% (highest scores) | 3539 | Kern | 19.2 | 73.1 | 7.7 | 72.4 | 14.8 | 9.1 | 1.1 | 0.9 | 1.7 |
| 6037231720 | 59.28 | 96.13 | 95-100% (highest scores) | 4966 | Los Angeles | 17.3 | 74.8 | 7.9 | 78.1 | 1.2 | 17.2 | 0.1 | 2.2 | 1.3 |
| 6065030503 | 59.23 | 96.12 | 95-100% (highest scores) | 3812 | Riverside | 24.1 | 73.1 | 2.8 | 84.6 | 6.1 | 5.6 | 0.3 | 1.5 | 1.8 |
| 6077003700 | 59.22 | 96.10 | 95-100% (highest scores) | 3570 | San Joaquin | 16.5 | 71.1 | 12.4 | 63.4 | 28.6 | 1.7 | 0.6 | 4.2 | 1.5 |
| 6037191810 | 59.18 | 96.09 | 95-100% (highest scores) | 3498 | Los Angeles | 12.3 | 83.3 | 4.4 | 72.7 | 17.1 | 4.1 | 0.1 | 4.2 | 1.8 |
| 6037502500 | 59.17 | 96.08 | 95-100% (highest scores) | 4215 | Los Angeles | 15.7 | 72.5 | 11.8 | 88.8 | 7.8 | 0.9 | 0.2 | 1.5 | 0.7 |
| 6037542602 | 59.14 | 96.07 | 95-100% (highest scores) | 5496 | Los Angeles | 18.4 | 75.9 | 5.7 | 71.8 | 1.1 | 25.2 | 0.2 | 1 | 0.7 |
| 6019003400 | 59.13 | 96.05 | 95-100% (highest scores) | 4555 | Fresno | 15.6 | 71.5 | 12.9 | 50.5 | 23.4 | 4.3 | 0.7 | 19.6 | 1.6 |
| 6065040102 | 59.13 | 96.04 | 95-100% (highest scores) | 4630 | Riverside | 15.9 | 76.3 | 7.8 | 74 | 21.7 | 1.7 | 0.5 | 1.3 | 0.8 |
| 6037530801 | 59.13 | 96.03 | 95-100% (highest scores) | 6325 | Los Angeles | 18.6 | 74.6 | 6.8 | 96.4 | 1.6 | 0.5 | 0.1 | 1.1 | 0.3 |
| 6037227020 | 59.12 | 96.01 | 95-100% (highest scores) | 3599 | Los Angeles | 20.5 | 75.4 | 4.1 | 92.8 | 0.3 | 6.5 | 0 | 0.2 | 0.3 |
| 6037533902 | 59.01 | 96.00 | 95-100% (highest scores) | 4051 | Los Angeles | 16.5 | 78 | 5.5 | 96 | 2.4 | 0.2 | 0.3 | 0.8 | 0.3 |
| 6037530802 | 59.00 | 95.99 | 95-100% (highest scores) | 3668 | Los Angeles | 16.6 | 73.8 | 9.6 | 95 | 2 | 0.4 | 0.4 | 2 | 0.3 |
| 6047002201 | 58.98 | 95.98 | 95-100% (highest scores) | 6097 | Merced | 20.2 | 68.6 | 11.2 | 73.3 | 21.3 | 2.4 | 0.4 | 1.1 | 1.4 |
| 6037534502 | 58.94 | 95.96 | 95-100% (highest scores) | 4257 | Los Angeles | 15.4 | 77.4 | 7.2 | 96.3 | 2.6 | 0.2 | 0 | 0.4 | 0.5 |
| 6037294701 | 58.93 | 95.95 | 95-100% (highest scores) | 3019 | Los Angeles | 17.8 | 75.5 | 6.7 | 87.1 | 4.2 | 6.1 | 0.4 | 1.5 | 0.8 |
| 6037534900 | 58.85 | 95.94 | 95-100% (highest scores) | 6569 | Los Angeles | 18.1 | 75.8 | 6.1 | 98 | 0.7 | 0.6 | 0.1 | 0.2 | 0.4 |
| 6037195802 | 58.85 | 95.93 | 95-100% (highest scores) | 2881 | Los Angeles | 11.6 | 77.3 | 11.1 | 62.1 | 6.2 | 2.4 | 0.2 | 27.9 | 1.2 |
| 6037534405 | 58.80 | 95.91 | 95-100% (highest scores) | 4292 | Los Angeles | 19.5 | 75.2 | 5.3 | 96.3 | 1.8 | 0.6 | 0.2 | 0.6 | 0.4 |
| 6071007108 | 58.79 | 95.90 | 95-100% (highest scores) | 2202 | San Bernardino | 17.8 | 79.5 | 2.7 | 45.7 | 18.2 | 25.9 | 0.4 | 7 | 2.8 |
| 6037104401 | 58.76 | 95.89 | 95-100% (highest scores) | 3357 | Los Angeles | 17.5 | 73.9 | 8.6 | 96.8 | 2.1 | 0.1 | 0.4 | 0.6 | 0.1 |

| | | | | | | | | | | | | | | |
|---|---|---|---|---|---|---|---|---|---|---|---|---|---|---|
| 6037570403 | 58.76 | 95.88 | 95-100% (highest scores) | 4587 | Los Angeles | 20 | 75.3 | 4.7 | 76.8 | 2.5 | 15.3 | 0.1 | 4.4 | 0.9 |
| 6111004902 | 58.75 | 95.86 | 95-100% (highest scores) | 5091 | Ventura | 19.6 | 70.7 | 9.7 | 95.8 | 1.5 | 1.2 | 0.1 | 0.9 | 0.5 |
| 6037402501 | 58.73 | 95.85 | 95-100% (highest scores) | 5577 | Los Angeles | 20.9 | 74.8 | 4.3 | 91.2 | 2.9 | 2.7 | 0.5 | 1.9 | 0.7 |
| 6037570203 | 58.73 | 95.84 | 95-100% (highest scores) | 3973 | Los Angeles | 19.1 | 76.5 | 4.4 | 60.7 | 5.2 | 23.3 | 0.2 | 8.9 | 1.8 |
| 6037123204 | 58.69 | 95.83 | 95-100% (highest scores) | 3449 | Los Angeles | 17.4 | 77.5 | 5.1 | 77.6 | 13.5 | 3.9 | 0.1 | 3.5 | 1.4 |
| 6037229200 | 58.69 | 95.81 | 95-100% (highest scores) | 4394 | Los Angeles | 18.4 | 74.5 | 7.1 | 81.7 | 0.6 | 16.2 | 0.1 | 0.8 | 0.6 |
| 6037127220 | 58.66 | 95.80 | 95-100% (highest scores) | 4931 | Los Angeles | 14.1 | 75.3 | 10.6 | 63.8 | 19.2 | 4.8 | 0.2 | 10.5 | 1.5 |
| 6073005100 | 58.65 | 95.79 | 95-100% (highest scores) | 7140 | San Diego | 8.4 | 85.4 | 6.2 | 33.3 | 42 | 15.4 | 0.8 | 5.4 | 3.1 |
| 6037542106 | 58.64 | 95.78 | 95-100% (highest scores) | 3373 | Los Angeles | 21.3 | 73.8 | 4.9 | 85.2 | 1.4 | 12 | 0.1 | 0.8 | 0.5 |
| 6037123203 | 58.60 | 95.76 | 95-100% (highest scores) | 3765 | Los Angeles | 17.3 | 78.6 | 4.1 | 81.8 | 9.3 | 4 | 0.1 | 3.3 | 1.5 |
| 6037192700 | 58.57 | 95.75 | 95-100% (highest scores) | 3513 | Los Angeles | 11.4 | 80.8 | 7.8 | 59.4 | 9.9 | 5 | 0.3 | 23.9 | 1.5 |
| 6037239201 | 58.55 | 95.74 | 95-100% (highest scores) | 3562 | Los Angeles | 19.6 | 75.8 | 4.6 | 81.5 | 0.7 | 16.8 | 0.1 | 0.2 | 0.8 |
| 6037532700 | 58.53 | 95.72 | 95-100% (highest scores) | 2990 | Los Angeles | 21 | 74.2 | 4.8 | 97.3 | 0.6 | 1.9 | 0 | 0.1 | 0.1 |
| 6037232120 | 58.51 | 95.71 | 95-100% (highest scores) | 5263 | Los Angeles | 18.9 | 75.9 | 5.2 | 78.3 | 0.7 | 19.3 | 0.4 | 0.4 | 1 |
| 6037571701 | 58.46 | 95.70 | 95-100% (highest scores) | 6352 | Los Angeles | 17.5 | 76.1 | 6.4 | 57.8 | 9 | 14.2 | 0.3 | 16.3 | 2.4 |
| 6037218500 | 58.46 | 95.69 | 95-100% (highest scores) | 2869 | Los Angeles | 13.3 | 77.1 | 9.6 | 54.2 | 5.3 | 34.6 | 0.1 | 2.8 | 3 |
| 6071007604 | 58.44 | 95.67 | 95-100% (highest scores) | 4306 | San Bernardino | 15.2 | 74 | 10.8 | 48.4 | 32.2 | 8.5 | 0.6 | 7.8 | 2.6 |
| 6037541605 | 58.38 | 95.66 | 95-100% (highest scores) | 5323 | Los Angeles | 19 | 75.3 | 5.7 | 76.3 | 0.8 | 21.5 | 0.1 | 0.5 | 0.8 |
| 6037204810 | 58.38 | 95.65 | 95-100% (highest scores) | 4478 | Los Angeles | 16.3 | 75.8 | 7.9 | 97.6 | 1.3 | 0 | 0.1 | 0.5 | 0.4 |
| 6019002701 | 58.33 | 95.64 | 95-100% (highest scores) | 4673 | Fresno | 19.3 | 74.3 | 6.4 | 80.4 | 9.5 | 2.3 | 0.5 | 6.4 | 0.9 |
| 6037531504 | 58.31 | 95.62 | 95-100% (highest scores) | 4414 | Los Angeles | 17.3 | 74.1 | 8.6 | 97.3 | 1.8 | 0.2 | 0.4 | 0.2 | 0.2 |
| 6037502301 | 58.28 | 95.61 | 95-100% (highest scores) | 5461 | Los Angeles | 13.2 | 75.3 | 11.5 | 91.6 | 5.3 | 1.1 | 0.4 | 1.2 | 0.4 |
| 6099002004 | 58.28 | 95.60 | 95-100% (highest scores) | 6022 | Stanislaus | 17.6 | 72.9 | 9.5 | 41.6 | 42.1 | 6.1 | 0.5 | 5.4 | 4.3 |
| 6071004800 | 58.28 | 95.59 | 95-100% (highest scores) | 3282 | San Bernardino | 21 | 72.1 | 6.9 | 91.1 | 2.3 | 5 | 0.1 | 0.6 | 0.9 |
| 6037224020 | 58.27 | 95.57 | 95-100% (highest scores) | 2789 | Los Angeles | 16.6 | 78.1 | 5.3 | 83.7 | 4.8 | 8.4 | 0.1 | 1.8 | 1.2 |
| 6037535002 | 58.26 | 95.56 | 95-100% (highest scores) | 3681 | Los Angeles | 20.2 | 74.2 | 5.6 | 94.3 | 0.9 | 4.4 | 0 | 0.3 | 0.1 |
| 6037228720 | 58.25 | 95.55 | 95-100% (highest scores) | 4492 | Los Angeles | 20.1 | 75.9 | 4 | 87.7 | 0.5 | 10.9 | 0.1 | 0 | 0.8 |
| 6037541606 | 58.18 | 95.54 | 95-100% (highest scores) | 2506 | Los Angeles | 22.3 | 73.4 | 4.3 | 84 | 1 | 14.9 | 0 | 0 | 0.2 |
| 6037503000 | 58.16 | 95.52 | 95-100% (highest scores) | 6057 | Los Angeles | 17.2 | 77.4 | 5.4 | 91.8 | 5.5 | 0.4 | 0.1 | 1.9 | 0.3 |
| 6037536000 | 58.15 | 95.51 | 95-100% (highest scores) | 3720 | Los Angeles | 18.5 | 74.9 | 6.6 | 97 | 2.1 | 0.4 | 0.1 | 0.3 | 0.1 |
| 6037208302 | 58.14 | 95.50 | 95-100% (highest scores) | 4360 | Los Angeles | 14.3 | 76.7 | 9 | 75.3 | 4.2 | 7.4 | 0.1 | 11.2 | 1.7 |
| 6025011400 | 58.13 | 95.48 | 95-100% (highest scores) | 4580 | Imperial | 18.3 | 69.8 | 11.9 | 91.7 | 2.3 | 5.3 | 0.1 | 0.1 | 0.4 |
| 6037603001 | 58.13 | 95.47 | 95-100% (highest scores) | 7139 | Los Angeles | 14.1 | 73.9 | 12 | 45.1 | 5 | 27.4 | 0.2 | 20.2 | 2.1 |
| 6037602900 | 58.13 | 95.46 | 95-100% (highest scores) | 4427 | Los Angeles | 14.9 | 75.7 | 9.4 | 66.8 | 6.6 | 18.8 | 0.4 | 5.6 | 1.9 |
| 6059086407 | 58.12 | 95.45 | 95-100% (highest scores) | 6488 | Orange | 14.9 | 77.9 | 7.2 | 53.8 | 30.3 | 2.8 | 0.2 | 10.8 | 2.1 |
| 6077005131 | 58.10 | 95.43 | 95-100% (highest scores) | 4173 | San Joaquin | 12.3 | 75.8 | 11.9 | 38.2 | 51.1 | 4 | 0.9 | 3.6 | 2.3 |
| 6099003804 | 58.09 | 95.42 | 95-100% (highest scores) | 6450 | Stanislaus | 17.7 | 71 | 11.3 | 51.9 | 40 | 1.3 | 0.8 | 3.8 | 2.3 |
| 6037541700 | 58.08 | 95.41 | 95-100% (highest scores) | 6366 | Los Angeles | 16.6 | 76.6 | 6.8 | 82.8 | 1.4 | 14.7 | 0.1 | 0.8 | 0.2 |
| 6037219300 | 58.07 | 95.40 | 95-100% (highest scores) | 3700 | Los Angeles | 16.2 | 74.3 | 9.5 | 56 | 2.5 | 33.7 | 0.4 | 4.8 | 2.6 |
| 6037190801 | 58.06 | 95.38 | 95-100% (highest scores) | 2594 | Los Angeles | 5.7 | 76.1 | 18.2 | 46.3 | 36.4 | 6.7 | 0.2 | 8.1 | 2.4 |
| 6037206010 | 58.06 | 95.37 | 95-100% (highest scores) | 3127 | Los Angeles | 13.4 | 73.4 | 13.2 | 51.5 | 4 | 3.3 | 0.2 | 39.7 | 1.3 |
| 6037104320 | 58.03 | 95.36 | 95-100% (highest scores) | 5998 | Los Angeles | 17.7 | 74.2 | 8.1 | 91.1 | 1.1 | 5.8 | 0.2 | 1.4 | 0.4 |
| 6037408301 | 57.98 | 95.35 | 95-100% (highest scores) | 5427 | Los Angeles | 15.2 | 76 | 8.8 | 85.8 | 5.3 | 0.5 | 0 | 8.1 | 0.4 |
| 6037190510 | 57.97 | 95.33 | 95-100% (highest scores) | 4227 | Los Angeles | 8.9 | 83.8 | 7.3 | 39.3 | 32.9 | 7.4 | 0.1 | 17.5 | 2.8 |
| 6037402903 | 57.95 | 95.32 | 95-100% (highest scores) | 4138 | Los Angeles | 15.6 | 77.2 | 7.2 | 79.1 | 5 | 4.1 | 0.2 | 10.8 | 0.8 |
| 6037128303 | 57.94 | 95.31 | 95-100% (highest scores) | 3982 | Los Angeles | 17.7 | 78.9 | 3.4 | 85.4 | 7.3 | 2.7 | 0.3 | 3.4 | 1 |
| 6029000400 | 57.94 | 95.30 | 95-100% (highest scores) | 4319 | Kern | 17.4 | 73.5 | 9.1 | 21.6 | 72.4 | 1.4 | 1.1 | 0.4 | 3.1 |
| 6099002005 | 57.93 | 95.28 | 95-100% (highest scores) | 3631 | Stanislaus | 15.2 | 77.4 | 7.4 | 42.5 | 39.3 | 3.9 | 0.6 | 10.2 | 3.5 |
| 6037402406 | 57.86 | 95.27 | 95-100% (highest scores) | 4776 | Los Angeles | 17.1 | 77.9 | 5 | 82.8 | 5.5 | 5.5 | 0.1 | 5.2 | 0.9 |
| 6037533603 | 57.85 | 95.26 | 95-100% (highest scores) | 6617 | Los Angeles | 17.8 | 72.6 | 9.6 | 93.1 | 5.5 | 0.2 | 0.1 | 0.2 | 0.9 |
| 6107003400 | 57.84 | 95.25 | 95-100% (highest scores) | 7016 | Tulare | 16.8 | 70.5 | 12.7 | 57.1 | 34.1 | 0.2 | 0.9 | 6.3 | 1.4 |
| 6111009100 | 57.83 | 95.23 | 95-100% (highest scores) | 5279 | Ventura | 17.2 | 74.6 | 8.2 | 93 | 3.6 | 2.1 | 0.1 | 0.8 | 0.4 |
| 6019002602 | 57.81 | 95.22 | 95-100% (highest scores) | 3520 | Fresno | 17.7 | 74.3 | 8 | 75.7 | 17.2 | 2.4 | 0.8 | 2.6 | 1.3 |
| 6071006601 | 57.78 | 95.21 | 95-100% (highest scores) | 4564 | San Bernardino | 17.4 | 74.4 | 8.2 | 83.1 | 12.8 | 1.9 | 0.3 | 0.7 | 1.2 |
| 6037243000 | 57.76 | 95.19 | 95-100% (highest scores) | 6769 | Los Angeles | 20.3 | 74.3 | 5.4 | 79.4 | 1.2 | 18.6 | 0.2 | 0 | 0.6 |
| 6037228710 | 57.76 | 95.18 | 95-100% (highest scores) | 4235 | Los Angeles | 19.8 | 74.7 | 5.5 | 88.1 | 0.6 | 9.5 | 0 | 1.2 | 0.5 |
| 6099002604 | 57.76 | 95.17 | 95-100% (highest scores) | 4681 | Stanislaus | 20.6 | 71.9 | 7.5 | 66.6 | 24 | 2.5 | 0.8 | 4.1 | 1.9 |
| 6037433101 | 57.76 | 95.16 | 95-100% (highest scores) | 2281 | Los Angeles | 12.5 | 74.1 | 13.4 | 49.5 | 6.2 | 0.2 | 0.3 | 43.6 | 0.3 |
| 6029004800 | 57.75 | 95.14 | 95-100% (highest scores) | 9297 | Kern | 21.3 | 70.2 | 8.5 | 88.3 | 1.5 | 1.3 | 0.3 | 8 | 0.7 |
| 6037603102 | 57.73 | 95.13 | 95-100% (highest scores) | 4084 | Los Angeles | 12.1 | 71.1 | 16.8 | 45.1 | 6.5 | 11.8 | 0.1 | 34.6 | 2 |
| 6037533602 | 57.73 | 95.12 | 95-100% (highest scores) | 5420 | Los Angeles | 17.9 | 76.1 | 6 | 93.4 | 5.2 | 0.2 | 0.1 | 0.4 | 0.8 |
| 6037502902 | 57.70 | 95.11 | 95-100% (highest scores) | 4043 | Los Angeles | 15.3 | 77 | 7.7 | 86.6 | 8.2 | 1.6 | 0.1 | 2.9 | 0.6 |
| 6071004103 | 57.66 | 95.09 | 95-100% (highest scores) | 5634 | San Bernardino | 20.2 | 74.2 | 5.6 | 79.6 | 6.2 | 8.5 | 0.2 | 4.2 | 1.2 |
| 6071000301 | 57.64 | 95.08 | 95-100% (highest scores) | 8795 | San Bernardino | 20.5 | 74.6 | 4.9 | 77.9 | 5.3 | 5.4 | 0.3 | 10.1 | 1 |
| 6071003301 | 57.64 | 95.07 | 95-100% (highest scores) | 4841 | San Bernardino | 17.8 | 73.5 | 8.7 | 78.7 | 13.6 | 4.3 | 0.3 | 2.4 | 0.8 |
| 6019003809 | 57.61 | 95.06 | 95-100% (highest scores) | 4771 | Fresno | 17.3 | 77.6 | 5.1 | 49.7 | 23.3 | 12.2 | 0.8 | 11.3 | 2.6 |

| | | | | | | | | | | | | | | |
|---|---|---|---|---|---|---|---|---|---|---|---|---|---|---|
| 6037542200 | 57.60 | 95.04 | 95-100% (highest scores) | 6962 | Los Angeles | 18.9 | 74.7 | 6.4 | 75.1 | 1 | 21.8 | 0.1 | 1 | 1 |
| 6037502302 | 57.60 | 95.03 | 95-100% (highest scores) | 3000 | Los Angeles | 18.3 | 74.7 | 7 | 93.2 | 3.5 | 0.8 | 0.3 | 1.7 | 0.5 |
| 6039000502 | 57.58 | 95.02 | 95-100% (highest scores) | 10473 | Madera | 21.7 | 72.3 | 6 | 78.7 | 14.3 | 3.7 | 0.4 | 1.6 | 1.3 |
| 6019008302 | 57.57 | 95.01 | 95-100% (highest scores) | 6562 | Fresno | 19.3 | 75.4 | 5.3 | 96.2 | 2.8 | 0.2 | 0.3 | 0.3 | 0.3 |
| 6037240900 | 57.54 | 94.99 | 90-95% | 5620 | Los Angeles | 19.7 | 74.7 | 5.6 | 73.9 | 0.3 | 24.8 | 0.1 | 0.2 | 0.7 |
| 6037294120 | 57.54 | 94.98 | 90-95% | 2370 | Los Angeles | 17.1 | 76.7 | 6.2 | 91.7 | 1.4 | 5.3 | 0.2 | 0.7 | 0.8 |
| 6037241002 | 57.54 | 94.97 | 90-95% | 3606 | Los Angeles | 18.2 | 75.3 | 6.5 | 54.7 | 0.6 | 42.9 | 0 | 0.3 | 1.5 |
| 6099002401 | 57.52 | 94.96 | 90-95% | 3567 | Stanislaus | 19.9 | 75.6 | 4.5 | 81.1 | 10 | 3.2 | 0.1 | 4.1 | 1.5 |
| 6037241202 | 57.51 | 94.94 | 90-95% | 4943 | Los Angeles | 16.1 | 74.8 | 9.1 | 56 | 0.9 | 41 | 0.2 | 0.3 | 1.5 |
| 6037123020 | 57.47 | 94.93 | 90-95% | 3432 | Los Angeles | 15.1 | 77.8 | 7.1 | 88 | 6.4 | 0.6 | 0 | 4.3 | 0.8 |
| 6037120300 | 57.46 | 94.92 | 90-95% | 5531 | Los Angeles | 11.6 | 79.2 | 9.2 | 61.1 | 16.2 | 1.6 | 0.2 | 19.5 | 1.4 |
| 6071004201 | 57.46 | 94.90 | 90-95% | 6854 | San Bernardino | 20.7 | 71.7 | 7.6 | 60 | 3.2 | 29.7 | 0.3 | 5.3 | 1.5 |
| 6037207102 | 57.45 | 94.89 | 90-95% | 2553 | Los Angeles | 9.5 | 63.6 | 26.9 | 23.7 | 2.6 | 3.4 | 0.3 | 69.5 | 0.5 |
| 6037535604 | 57.41 | 94.88 | 90-95% | 4435 | Los Angeles | 18.8 | 75.7 | 5.5 | 97.7 | 1.2 | 0.8 | 0 | 0.2 | 0.1 |
| 6071006500 | 57.41 | 94.87 | 90-95% | 8386 | San Bernardino | 17.6 | 78.3 | 4.1 | 62.3 | 14.4 | 14.8 | 0.7 | 5.4 | 2.4 |
| 6037533105 | 57.40 | 94.85 | 90-95% | 2580 | Los Angeles | 17.7 | 77.3 | 5 | 98.2 | 1.1 | 0.2 | 0 | 0 | 0.4 |
| 6067005205 | 57.39 | 94.84 | 90-95% | 2109 | Sacramento | 12.5 | 74.6 | 12.9 | 21.1 | 46.7 | 13.5 | 1.1 | 11.6 | 6.1 |
| 6037120020 | 57.37 | 94.83 | 90-95% | 4057 | Los Angeles | 16.1 | 78.5 | 5.4 | 76.4 | 5 | 2.1 | 0.3 | 15.2 | 1.1 |
| 6099003100 | 57.36 | 94.82 | 90-95% | 4000 | Stanislaus | 15.5 | 74.3 | 10.2 | 50 | 45.2 | 1.1 | 0.7 | 1.3 | 1.7 |
| 6037402402 | 57.32 | 94.80 | 90-95% | 7076 | Los Angeles | 14 | 80.9 | 5.1 | 67.7 | 14.7 | 4.4 | 0.2 | 11.2 | 1.8 |
| 6037532001 | 57.31 | 94.79 | 90-95% | 3415 | Los Angeles | 13.5 | 71.6 | 14.9 | 93.8 | 4.8 | 0.2 | 0.1 | 0.9 | 0.2 |
| 6037405001 | 57.24 | 94.78 | 90-95% | 6170 | Los Angeles | 15 | 77.5 | 7.5 | 88.5 | 4.1 | 1 | 0.1 | 5.7 | 0.5 |
| 6037533805 | 57.24 | 94.77 | 90-95% | 3604 | Los Angeles | 17.2 | 76.3 | 6.5 | 96.2 | 2.9 | 0.3 | 0 | 0.3 | 0.2 |
| 6037534203 | 57.21 | 94.75 | 90-95% | 3204 | Los Angeles | 19.2 | 72.6 | 8.2 | 96.5 | 2.2 | 0.3 | 0.1 | 0.6 | 0.2 |
| 6047001301 | 57.20 | 94.74 | 90-95% | 3213 | Merced | 15.8 | 71.7 | 12.5 | 49.6 | 38.4 | 5.9 | 0.7 | 3.2 | 2.2 |
| 6037534803 | 57.16 | 94.73 | 90-95% | 4930 | Los Angeles | 17 | 74.8 | 8.2 | 97.6 | 1.7 | 0.2 | 0.2 | 0.2 | 0.2 |
| 6065042904 | 57.15 | 94.72 | 90-95% | 9352 | Riverside | 18.5 | 74.6 | 6.9 | 76.1 | 13.3 | 8 | 0.3 | 1.1 | 1.2 |
| 6037532606 | 57.12 | 94.70 | 90-95% | 4284 | Los Angeles | 16.3 | 75.3 | 8.4 | 96.5 | 1.8 | 0.8 | 0 | 0.6 | 0.2 |
| 6037533601 | 57.11 | 94.69 | 90-95% | 4484 | Los Angeles | 17.5 | 77.5 | 5 | 95.5 | 3.4 | 0.1 | 0.2 | 0.4 | 0.5 |
| 6037123205 | 57.08 | 94.68 | 90-95% | 2645 | Los Angeles | 16.7 | 78.6 | 4.7 | 82.9 | 10.8 | 2.3 | 0.1 | 2.7 | 1.2 |
| 6037209103 | 57.05 | 94.67 | 90-95% | 3216 | Los Angeles | 17.9 | 78.6 | 3.5 | 93.8 | 1.2 | 3.2 | 0.2 | 1.3 | 0.4 |
| 6013379000 | 57.04 | 94.65 | 90-95% | 6117 | Contra Costa | 17.9 | 72.9 | 9.2 | 52.8 | 2.3 | 40.2 | 0.3 | 2.5 | 1.9 |
| 6037291300 | 57.04 | 94.64 | 90-95% | 2601 | Los Angeles | 9.3 | 66.4 | 24.3 | 24.4 | 16.5 | 6.4 | 0.5 | 48.3 | 4.1 |
| 6037121900 | 56.98 | 94.63 | 90-95% | 4110 | Los Angeles | 12.7 | 78.6 | 8.7 | 78.8 | 13 | 0.9 | 0.5 | 5.7 | 1.1 |
| 6037540600 | 56.96 | 94.61 | 90-95% | 4271 | Los Angeles | 18.6 | 74.2 | 7.2 | 64.5 | 1 | 33 | 0.1 | 0.5 | 0.9 |
| 6107002901 | 56.96 | 94.60 | 90-95% | 3729 | Tulare | 20 | 71.1 | 8.9 | 72.1 | 17.7 | 7.2 | 0.4 | 1 | 1.6 |
| 6037186401 | 56.91 | 94.59 | 90-95% | 3452 | Los Angeles | 17.7 | 74.1 | 8.2 | 82.7 | 3.2 | 0.7 | 0 | 12.6 | 0.9 |
| 6037533103 | 56.90 | 94.58 | 90-95% | 3577 | Los Angeles | 20.6 | 75.3 | 4.1 | 98.3 | 1.3 | 0.1 | 0 | 0.1 | 0.2 |
| 6037432802 | 56.90 | 94.56 | 90-95% | 5821 | Los Angeles | 18.5 | 76.8 | 4.7 | 76.9 | 3 | 0.8 | 0 | 19.1 | 0.2 |
| 6013312000 | 56.88 | 94.55 | 90-95% | 2292 | Contra Costa | 15.2 | 72.5 | 12.3 | 38.3 | 10.5 | 39 | 0.4 | 8.5 | 3.2 |
| 6037191000 | 56.87 | 94.54 | 90-95% | 3228 | Los Angeles | 6.4 | 84 | 9.6 | 44.2 | 36.5 | 8.8 | 0.5 | 7.1 | 3 |
| 6071000904 | 56.82 | 94.53 | 90-95% | 3248 | San Bernardino | 16.4 | 77.6 | 6 | 60.1 | 26.4 | 5.2 | 0.2 | 6.2 | 1.8 |
| 6037226700 | 56.78 | 94.51 | 90-95% | 6170 | Los Angeles | 19.6 | 75.5 | 4.9 | 95.1 | 0.5 | 3.8 | 0 | 0.2 | 0.4 |
| 6065040101 | 56.78 | 94.50 | 90-95% | 4287 | Riverside | 16.7 | 76 | 7.3 | 73.6 | 13.9 | 9 | 0.3 | 1.4 | 1.8 |
| 6099001900 | 56.72 | 94.49 | 90-95% | 5257 | Stanislaus | 13 | 72.4 | 14.6 | 26.5 | 65.8 | 2.1 | 0.6 | 2 | 3.1 |
| 6037226410 | 56.69 | 94.48 | 90-95% | 3491 | Los Angeles | 19 | 75.7 | 5.3 | 95.3 | 0.5 | 2.7 | 0.1 | 1.2 | 0.2 |
| 6037226420 | 56.69 | 94.46 | 90-95% | 4906 | Los Angeles | 18.3 | 75.7 | 6 | 90.5 | 0.3 | 7.7 | 0 | 1.2 | 0.3 |
| 6037533202 | 56.68 | 94.45 | 90-95% | 2762 | Los Angeles | 15.9 | 77.1 | 7 | 97.6 | 1.8 | 0.1 | 0 | 0.3 | 0.2 |
| 6077001800 | 56.63 | 94.44 | 90-95% | 3939 | San Joaquin | 19.7 | 70.6 | 9.7 | 72.3 | 18.6 | 1.7 | 0.6 | 4.4 | 2.4 |
| 6065041600 | 56.63 | 94.43 | 90-95% | 6230 | Riverside | 21.4 | 73.3 | 5.3 | 84.6 | 10.3 | 2.2 | 0.4 | 1.4 | 1.1 |
| 6067002200 | 56.60 | 94.41 | 90-95% | 4004 | Sacramento | 19.5 | 70.4 | 10.1 | 18.5 | 32.4 | 25.4 | 0.5 | 16.6 | 6.7 |
| 6037240600 | 56.58 | 94.40 | 90-95% | 4932 | Los Angeles | 19.5 | 74.8 | 5.7 | 67.1 | 0.7 | 31.1 | 0.2 | 0.2 | 0.8 |
| 6037123303 | 56.56 | 94.39 | 90-95% | 3301 | Los Angeles | 13.3 | 78.2 | 8.5 | 60.2 | 26.5 | 3 | 0 | 7.8 | 2.5 |
| 6099002002 | 56.55 | 94.38 | 90-95% | 4527 | Stanislaus | 15.2 | 74.6 | 10.2 | 52.4 | 42.3 | 0.3 | 0.8 | 1.3 | 2.9 |
| 6037540902 | 56.55 | 94.36 | 90-95% | 4506 | Los Angeles | 13.4 | 73.3 | 13.3 | 37 | 1 | 60.4 | 0.2 | 0.2 | 1.2 |
| 6037541200 | 56.54 | 94.35 | 90-95% | 5662 | Los Angeles | 13.6 | 71.1 | 15.3 | 29.3 | 0.7 | 68.1 | 0.2 | 0.4 | 1.3 |
| 6019004205 | 56.53 | 94.34 | 90-95% | 5888 | Fresno | 18.8 | 72.1 | 9.1 | 49.2 | 28.7 | 12.7 | 0.7 | 6.2 | 2.4 |
| 6037402301 | 56.51 | 94.32 | 90-95% | 5454 | Los Angeles | 17.6 | 76.8 | 5.6 | 80.5 | 8 | 4.7 | 0.1 | 5.9 | 0.8 |
| 6037241400 | 56.47 | 94.31 | 90-95% | 3285 | Los Angeles | 19.2 | 74.9 | 5.9 | 62.7 | 0.5 | 34.9 | 0.1 | 0.5 | 1.4 |
| 6071001503 | 56.42 | 94.30 | 90-95% | 4195 | San Bernardino | 23 | 73.7 | 3.3 | 90.2 | 4.8 | 2.4 | 0.3 | 1.4 | 0.9 |
| 6037603302 | 56.40 | 94.29 | 90-95% | 3804 | Los Angeles | 11 | 71.6 | 17.4 | 33.9 | 10.6 | 5.8 | 0.2 | 46.5 | 3 |
| 6037127605 | 56.39 | 94.27 | 90-95% | 3549 | Los Angeles | 15.7 | 80.7 | 3.6 | 72.7 | 14.2 | 5.9 | 0.1 | 5.9 | 1.3 |
| 6037432700 | 56.38 | 94.26 | 90-95% | 5262 | Los Angeles | 14.6 | 76.4 | 9 | 77.3 | 3.1 | 0.2 | 0.2 | 18.9 | 0.3 |
| 6037433902 | 56.34 | 94.25 | 90-95% | 3780 | Los Angeles | 14.4 | 75.6 | 10 | 86.5 | 4.4 | 0.1 | 0.1 | 8.7 | 0.3 |
| 6037553602 | 56.33 | 94.24 | 90-95% | 4730 | Los Angeles | 17.1 | 78.3 | 4.6 | 70.1 | 4.2 | 20.7 | 0.1 | 3.9 | 1.1 |
| 6037218400 | 56.31 | 94.22 | 90-95% | 4714 | Los Angeles | 15.1 | 77.3 | 7.6 | 66 | 4.1 | 26.5 | 0.1 | 1.2 | 2.1 |

| | | | | | | | | | | | | | | | |
|---|---|---|---|---|---|---|---|---|---|---|---|---|---|---|---|
| 6037433501 | 56.31 | 94.21 | 90-95% | 1954 | Los Angeles | 17.6 | 74.8 | 7.6 | 87.9 | 4.1 | 0.1 | 0.1 | 7.3 | 0.6 |
| 6037228600 | 56.29 | 94.20 | 90-95% | 5049 | Los Angeles | 19.6 | 76.5 | 3.9 | 86.9 | 1.3 | 10.8 | 0 | 0.3 | 0.8 |
| 6037570602 | 56.26 | 94.19 | 90-95% | 6356 | Los Angeles | 14.8 | 78 | 7.2 | 45.8 | 11.2 | 11.5 | 0.2 | 28.9 | 2.3 |
| 6037543201 | 56.24 | 94.17 | 90-95% | 3607 | Los Angeles | 16.3 | 74.7 | 9 | 59 | 1 | 38 | 0 | 0.6 | 1.4 |
| 6019001407 | 56.23 | 94.16 | 90-95% | 4694 | Fresno | 22.6 | 73.7 | 3.7 | 59.3 | 8.7 | 16.2 | 0.3 | 13.7 | 1.8 |
| 6037531902 | 56.23 | 94.15 | 90-95% | 4077 | Los Angeles | 14.5 | 75 | 10.5 | 97.1 | 2.2 | 0.1 | 0.1 | 0.3 | 0.2 |
| 6037232700 | 56.20 | 94.14 | 90-95% | 5895 | Los Angeles | 16.4 | 77.2 | 6.4 | 73.6 | 0.7 | 24.2 | 0.1 | 0.5 | 1 |
| 6037291120 | 56.20 | 94.12 | 90-95% | 2210 | Los Angeles | 16.7 | 76.5 | 6.8 | 66.3 | 1.9 | 28.6 | 0 | 2.6 | 0.5 |
| 6037531702 | 56.18 | 94.11 | 90-95% | 4754 | Los Angeles | 18 | 73.6 | 8.4 | 96.8 | 1.9 | 0.4 | 0.1 | 0.4 | 0.4 |
| 6037542104 | 56.16 | 94.10 | 90-95% | 3524 | Los Angeles | 18.8 | 75.5 | 5.7 | 85.6 | 0.5 | 12.2 | 0 | 1 | 0.6 |
| 6077003803 | 56.15 | 94.09 | 90-95% | 5281 | San Joaquin | 12.9 | 78.9 | 8.2 | 48.7 | 26.3 | 11.6 | 0.6 | 10 | 2.8 |
| 6065041203 | 56.11 | 94.07 | 90-95% | 3545 | Riverside | 18.5 | 77.4 | 4.1 | 78 | 13.5 | 4.3 | 0.4 | 2.4 | 1.4 |
| 6037121802 | 56.11 | 94.06 | 90-95% | 3525 | Los Angeles | 13.3 | 78.6 | 8.1 | 67.7 | 17.3 | 5.6 | 0.2 | 8 | 1.2 |
| 6037434004 | 56.09 | 94.05 | 90-95% | 2796 | Los Angeles | 15.2 | 74.7 | 10.1 | 90.6 | 3.8 | 0.2 | 0.4 | 4.6 | 0.5 |
| 6037185203 | 56.09 | 94.03 | 90-95% | 3200 | Los Angeles | 15.1 | 76.3 | 8.6 | 84.8 | 7.4 | 1.3 | 0.1 | 5.8 | 0.7 |
| 6037532500 | 56.05 | 94.02 | 90-95% | 4078 | Los Angeles | 16.7 | 78.1 | 5.2 | 96.3 | 1.1 | 0.6 | 0 | 1.6 | 0.3 |
| 6037407002 | 56.04 | 94.01 | 90-95% | 3804 | Los Angeles | 15.7 | 74.4 | 9.9 | 87 | 2.9 | 1 | 0.1 | 8.5 | 0.5 |
| 6037239802 | 56.03 | 94.00 | 90-95% | 4902 | Los Angeles | 20.1 | 74.9 | 5 | 72 | 0.4 | 26.5 | 0.1 | 0.3 | 0.6 |
| 6037228210 | 56.02 | 93.98 | 90-95% | 3806 | Los Angeles | 17.7 | 75.5 | 6.8 | 84.3 | 1.7 | 10.9 | 0.1 | 2.8 | 0.3 |
| 6047001302 | 56.00 | 93.97 | 90-95% | 3264 | Merced | 16.2 | 72.8 | 11 | 49.7 | 34.5 | 5.7 | 0.9 | 6.5 | 2.6 |
| 6037575402 | 56.00 | 93.96 | 90-95% | 4065 | Los Angeles | 19.8 | 76.8 | 3.4 | 77 | 3.7 | 11.7 | 0.5 | 5.5 | 1.5 |
| 6037231710 | 55.98 | 93.95 | 90-95% | 4358 | Los Angeles | 19 | 77 | 4 | 79.1 | 0.5 | 18.8 | 0.3 | 0.3 | 1 |
| 6065042010 | 55.98 | 93.93 | 90-95% | 5887 | Riverside | 18.2 | 74.2 | 7.6 | 75.1 | 15.5 | 6.4 | 0.2 | 1.1 | 1.7 |
| 6037405102 | 55.97 | 93.92 | 90-95% | 5069 | Los Angeles | 15.8 | 75.4 | 8.8 | 78.4 | 4.2 | 1.2 | 0.1 | 15.3 | 0.7 |
| 6037203600 | 55.95 | 93.91 | 90-95% | 5394 | Los Angeles | 17.9 | 74.6 | 7.5 | 97.4 | 1.2 | 0.2 | 0.2 | 0.7 | 0.3 |
| 6037570204 | 55.93 | 93.90 | 90-95% | 4130 | Los Angeles | 15.7 | 73.7 | 10.6 | 53.6 | 15.2 | 16.1 | 0.4 | 13.4 | 1.2 |
| 6065040201 | 55.92 | 93.88 | 90-95% | 5897 | Riverside | 18.4 | 76.2 | 5.4 | 63.5 | 25.1 | 5.3 | 0.2 | 4.3 | 1.5 |
| 6037104822 | 55.92 | 93.87 | 90-95% | 2277 | Los Angeles | 17.1 | 73 | 9.9 | 87.7 | 3.3 | 1.1 | 0 | 7.1 | 0.7 |
| 6077005127 | 55.91 | 93.86 | 90-95% | 5510 | San Joaquin | 17.5 | 76.5 | 6 | 42.7 | 21.9 | 7.5 | 0.5 | 23.8 | 3.6 |
| 6037124104 | 55.89 | 93.85 | 90-95% | 2439 | Los Angeles | 13.1 | 78.1 | 8.8 | 60.3 | 27.1 | 6.7 | 0.2 | 3.5 | 2.2 |
| 6037302503 | 55.89 | 93.83 | 90-95% | 4330 | Los Angeles | 10 | 76.5 | 13.5 | 25.4 | 60 | 0.6 | 0 | 11.5 | 2.5 |
| 6059110500 | 55.88 | 93.82 | 90-95% | 8631 | Orange | 16.4 | 75.2 | 8.4 | 60.6 | 13.5 | 5.3 | 0.2 | 18.7 | 1.7 |
| 6071002401 | 55.88 | 93.81 | 90-95% | 8946 | San Bernardino | 18.5 | 76 | 5.5 | 88.6 | 7.8 | 1.2 | 0.1 | 1.6 | 0.6 |
| 6037408401 | 55.86 | 93.79 | 90-95% | 4289 | Los Angeles | 11.7 | 75.8 | 12.5 | 69.2 | 9.4 | 1.5 | 0.1 | 19 | 0.7 |
| 6019003807 | 55.86 | 93.78 | 90-95% | 3362 | Fresno | 17.6 | 72.5 | 9.9 | 53.1 | 25.9 | 7.3 | 0.7 | 11.5 | 1.5 |
| 6071004604 | 55.85 | 93.77 | 90-95% | 5177 | San Bernardino | 15.4 | 75 | 9.6 | 64.4 | 23.8 | 8.3 | 0.5 | 1.3 | 1.7 |
| 6065041101 | 55.84 | 93.76 | 90-95% | 5139 | Riverside | 24.8 | 72.6 | 2.6 | 85.8 | 7.6 | 3.5 | 0.9 | 1.2 | 1.1 |
| 6019006900 | 55.81 | 93.74 | 90-95% | 3170 | Fresno | 17.5 | 72 | 10.5 | 81.3 | 12.5 | 0.2 | 0.2 | 5.1 | 0.7 |
| 6037310501 | 55.81 | 93.73 | 90-95% | 3205 | Los Angeles | 12.3 | 80.8 | 6.9 | 57.7 | 27.8 | 2.7 | 0.2 | 9.2 | 2.3 |
| 6037237101 | 55.80 | 93.72 | 90-95% | 3705 | Los Angeles | 18.5 | 75.3 | 6.2 | 68.3 | 0.6 | 30 | 0.1 | 0.2 | 0.7 |
| 6071000303 | 55.79 | 93.71 | 90-95% | 7169 | San Bernardino | 17 | 77.4 | 5.6 | 82.3 | 10.9 | 1.6 | 0.1 | 4.5 | 0.6 |
| 6077005110 | 55.77 | 93.69 | 90-95% | 6488 | San Joaquin | 14.7 | 74.3 | 11 | 37.1 | 53.7 | 2.2 | 0.7 | 3 | 3.3 |
| 6037204410 | 55.73 | 93.68 | 90-95% | 2363 | Los Angeles | 16.8 | 76.2 | 7 | 93.6 | 1.8 | 0.2 | 0.3 | 3.5 | 0.7 |
| 6077005122 | 55.71 | 93.67 | 90-95% | 4829 | San Joaquin | 15.4 | 77.7 | 6.9 | 35.6 | 43.2 | 3.3 | 0.5 | 14.1 | 3.3 |
| 6059011601 | 55.69 | 93.66 | 90-95% | 7955 | Orange | 18.3 | 77.7 | 4 | 73.8 | 15 | 2.2 | 0.2 | 7.5 | 1.3 |
| 6037534406 | 55.68 | 93.64 | 90-95% | 4609 | Los Angeles | 19.1 | 76.1 | 4.8 | 97.5 | 1.3 | 0.5 | 0.2 | 0.2 | 0.3 |
| 6037237300 | 55.65 | 93.63 | 90-95% | 5262 | Los Angeles | 13.9 | 74.1 | 12 | 39.6 | 1 | 56.8 | 0.1 | 0.5 | 2 |
| 6037207301 | 55.65 | 93.62 | 90-95% | 4521 | Los Angeles | 1.8 | 83.7 | 14.5 | 20.8 | 37.2 | 20.2 | 0.9 | 15.9 | 4.9 |
| 6037531901 | 55.62 | 93.61 | 90-95% | 6529 | Los Angeles | 16 | 75.1 | 8.9 | 97.3 | 1.9 | 0.2 | 0.1 | 0.4 | 0.2 |
| 6037192620 | 55.62 | 93.59 | 90-95% | 3868 | Los Angeles | 12.5 | 81.6 | 5.9 | 68.6 | 5.5 | 2.6 | 0.3 | 21.5 | 1.5 |
| 6077001700 | 55.60 | 93.58 | 90-95% | 3998 | San Joaquin | 20.1 | 72.8 | 7.1 | 74.6 | 18 | 1.9 | 0.6 | 2.9 | 2 |
| 6071005300 | 55.59 | 93.57 | 90-95% | 5516 | San Bernardino | 18.2 | 75 | 6.8 | 67.1 | 17.4 | 11.8 | 0.5 | 1.6 | 1.6 |
| 6037199201 | 55.58 | 93.56 | 90-95% | 4089 | Los Angeles | 15.4 | 75.7 | 8.9 | 68.4 | 2.5 | 0.8 | 0.1 | 27.4 | 0.8 |
| 6037433504 | 55.55 | 93.54 | 90-95% | 4679 | Los Angeles | 17.3 | 75.8 | 6.9 | 79.5 | 2.7 | 0.2 | 0 | 16.9 | 0.6 |
| 6019006201 | 55.52 | 93.53 | 90-95% | 2608 | Fresno | 21.8 | 71.1 | 7.1 | 91.4 | 6.2 | 0 | 0.5 | 1.1 | 0.7 |
| 6037531101 | 55.51 | 93.52 | 90-95% | 5091 | Los Angeles | 17.8 | 73 | 9.2 | 97.6 | 1.6 | 0.1 | 0.1 | 0.4 | 0.3 |
| 6037602105 | 55.44 | 93.50 | 90-95% | 4273 | Los Angeles | 15.8 | 77.3 | 6.9 | 66.6 | 6.4 | 19.5 | 0.4 | 5.5 | 1.6 |
| 6071001001 | 55.35 | 93.49 | 90-95% | 4990 | San Bernardino | 15.9 | 76.7 | 7.4 | 66.8 | 19.2 | 6.4 | 0.3 | 5.7 | 1.6 |
| 6001409200 | 55.29 | 93.48 | 90-95% | 3152 | Alameda | 17.4 | 75 | 7.6 | 49.5 | 1.7 | 40.1 | 0.4 | 6.4 | 1.9 |
| 6037572900 | 55.29 | 93.47 | 90-95% | 5250 | Los Angeles | 17.9 | 75 | 7.1 | 70.2 | 2.7 | 8.6 | 0.1 | 16.6 | 1.7 |
| 6037208402 | 55.28 | 93.45 | 90-95% | 2775 | Los Angeles | 12.4 | 79 | 8.6 | 71.7 | 2.7 | 1.5 | 0.3 | 22.4 | 1.2 |
| 6019002100 | 55.26 | 93.44 | 90-95% | 5419 | Fresno | 14.6 | 74 | 11.4 | 56.2 | 33.1 | 4.9 | 1 | 2.9 | 1.9 |
| 6037132102 | 55.26 | 93.43 | 90-95% | 5310 | Los Angeles | 12.7 | 76.6 | 10.7 | 46.6 | 35 | 4.6 | 0.2 | 10.8 | 2.8 |
| 6037402902 | 55.18 | 93.42 | 90-95% | 6445 | Los Angeles | 18.3 | 73.9 | 7.8 | 78.6 | 6.1 | 4.5 | 0.2 | 9.8 | 0.8 |
| 6019001900 | 55.16 | 93.40 | 90-95% | 2914 | Fresno | 16.1 | 71.2 | 12.7 | 56.3 | 25.6 | 5.3 | 0.5 | 9 | 3.3 |
| 6077002100 | 55.14 | 93.39 | 90-95% | 5546 | San Joaquin | 20.1 | 72.9 | 7 | 65.4 | 5 | 15.6 | 0.2 | 11 | 2.8 |

| | | | | | | | | | | | | | | |
|---|---|---|---|---|---|---|---|---|---|---|---|---|---|---|
| 6047000201 | 55.14 | 93.38 | 90-95% | 3626 | Merced | 17.1 | 72.5 | 10.4 | 56.9 | 36 | 0.2 | 0.6 | 4.1 | 2.1 |
| 6047002100 | 55.12 | 93.37 | 90-95% | 3862 | Merced | 16.4 | 73.6 | 10 | 60 | 35.6 | 1.2 | 0.2 | 1.9 | 1 |
| 6037127102 | 55.09 | 93.35 | 90-95% | 4726 | Los Angeles | 15.4 | 78.6 | 6 | 61.9 | 21.7 | 5.7 | 0.1 | 8.7 | 1.9 |
| 6113010203 | 55.09 | 93.34 | 90-95% | 5397 | Yolo | 17.6 | 70.1 | 12.3 | 45.7 | 37.6 | 4.8 | 1.5 | 6.5 | 3.9 |
| 6037532605 | 55.07 | 93.33 | 90-95% | 3715 | Los Angeles | 16.9 | 72.3 | 10.8 | 96.1 | 1.3 | 1 | 0 | 1.3 | 0.3 |
| 6037232400 | 55.05 | 93.32 | 90-95% | 6957 | Los Angeles | 15 | 76.5 | 8.5 | 56.4 | 1.3 | 39.6 | 0.1 | 0.8 | 1.8 |
| 6071001809 | 55.03 | 93.30 | 90-95% | 4476 | San Bernardino | 15.6 | 78.8 | 5.6 | 73.1 | 19.1 | 4.3 | 0.2 | 2.3 | 1.1 |
| 6077005129 | 55.01 | 93.29 | 90-95% | 3582 | San Joaquin | 16.3 | 75.2 | 8.5 | 53.2 | 28.2 | 2.9 | 0.9 | 12.3 | 2.6 |
| 6019002300 | 54.99 | 93.28 | 90-95% | 3624 | Fresno | 15.6 | 78.1 | 6.3 | 57.5 | 27.6 | 6.6 | 1.2 | 4.9 | 2.3 |
| 6037408139 | 54.98 | 93.27 | 90-95% | 4482 | Los Angeles | 16.9 | 76.5 | 6.6 | 95 | 2.3 | 0 | 0.1 | 2.5 | 0.1 |
| 6047000902 | 54.97 | 93.25 | 90-95% | 8419 | Merced | 18.5 | 73.7 | 7.8 | 48.5 | 30.7 | 3.2 | 0.4 | 14.7 | 2.6 |
| 6037187200 | 54.95 | 93.24 | 90-95% | 3132 | Los Angeles | 12.4 | 78 | 9.6 | 76.3 | 8.9 | 1 | 0.1 | 12.2 | 1.5 |
| 6037209200 | 54.95 | 93.23 | 90-95% | 2785 | Los Angeles | 11.1 | 84.7 | 4.2 | 48.5 | 19.5 | 5.7 | 0.3 | 23.2 | 2.8 |
| 6067004502 | 54.94 | 93.21 | 90-95% | 4795 | Sacramento | 19.6 | 71.2 | 9.2 | 52.3 | 17 | 14.1 | 0.4 | 12.3 | 3.8 |
| 6065042507 | 54.89 | 93.20 | 90-95% | 5011 | Riverside | 15.5 | 77.4 | 7.1 | 58.8 | 14.8 | 17.3 | 0.4 | 6 | 2.7 |
| 6071007107 | 54.88 | 93.19 | 90-95% | 3302 | San Bernardino | 22.3 | 72.5 | 5.2 | 52.6 | 21.6 | 19.7 | 0.4 | 3.1 | 2.6 |
| 6037302002 | 54.88 | 93.18 | 90-95% | 3532 | Los Angeles | 7.5 | 74 | 18.5 | 15.3 | 62.6 | 2.3 | 0.2 | 15.6 | 4 |
| 6037535901 | 54.86 | 93.16 | 90-95% | 5757 | Los Angeles | 15.3 | 77.6 | 7.1 | 95.1 | 3.4 | 0.5 | 0.1 | 0.6 | 0.4 |
| 6037575101 | 54.84 | 93.15 | 90-95% | 4754 | Los Angeles | 17.6 | 78.1 | 4.3 | 50 | 9.6 | 15.5 | 0.3 | 21.8 | 2.8 |
| 6037228220 | 54.84 | 93.14 | 90-95% | 4389 | Los Angeles | 20.9 | 75.5 | 3.6 | 86.8 | 0.9 | 11.3 | 0 | 0.1 | 1 |
| 6037536200 | 54.84 | 93.13 | 90-95% | 7289 | Los Angeles | 15.1 | 77.1 | 7.8 | 87.3 | 8.5 | 1.1 | 0.2 | 2.2 | 0.7 |
| 6037121010 | 54.83 | 93.11 | 90-95% | 4989 | Los Angeles | 12.3 | 77.4 | 10.3 | 62.6 | 24.1 | 1 | 0.3 | 10.5 | 1.5 |
| 6037221401 | 54.81 | 93.10 | 90-95% | 3359 | Los Angeles | 11.8 | 63.5 | 24.7 | 42.5 | 8.8 | 42.4 | 0.3 | 3.8 | 2.2 |
| 6077002800 | 54.81 | 93.09 | 90-95% | 6052 | San Joaquin | 20.3 | 74.1 | 5.6 | 61.9 | 9.2 | 15.6 | 0.4 | 10.2 | 2.7 |
| 6037601700 | 54.80 | 93.08 | 90-95% | 5646 | Los Angeles | 16.9 | 78.7 | 4.4 | 91 | 1.7 | 4.7 | 0.1 | 1.9 | 0.6 |
| 6047001502 | 54.78 | 93.06 | 90-95% | 2822 | Merced | 19.8 | 72.5 | 7.7 | 82.8 | 5.1 | 4.7 | 0.1 | 6.1 | 1.2 |
| 6071004700 | 54.77 | 93.05 | 90-95% | 5791 | San Bernardino | 20.3 | 71.7 | 8 | 87.2 | 3.6 | 7.5 | 0.2 | 1.1 | 0.4 |
| 6019004701 | 54.74 | 93.04 | 90-95% | 6682 | Fresno | 18.7 | 68.8 | 12.5 | 49.1 | 28.3 | 14.5 | 0.6 | 4.9 | 2.7 |
| 6037204420 | 54.72 | 93.03 | 90-95% | 3138 | Los Angeles | 17.9 | 75.5 | 6.6 | 94.1 | 2.2 | 2.1 | 0.1 | 1.1 | 0.5 |
| 6037123410 | 54.71 | 93.01 | 90-95% | 4247 | Los Angeles | 13.5 | 76.4 | 10.1 | 57.2 | 31.8 | 2.9 | 0.1 | 6 | 2 |
| 6037294810 | 54.70 | 93.00 | 90-95% | 3991 | Los Angeles | 21.1 | 74.9 | 4 | 93.2 | 1.6 | 2.2 | 0.1 | 2 | 0.9 |
| 6037433700 | 54.69 | 92.99 | 90-95% | 3294 | Los Angeles | 15.3 | 73.8 | 10.9 | 86.8 | 4.2 | 0.3 | 0 | 8.3 | 0.5 |
| 6037552400 | 54.65 | 92.98 | 90-95% | 2794 | Los Angeles | 16 | 76.4 | 7.6 | 83.9 | 6.4 | 2.1 | 0.4 | 6.1 | 1 |
| 6037121210 | 54.65 | 92.96 | 90-95% | 3122 | Los Angeles | 12.9 | 75.4 | 11.7 | 70.7 | 11 | 1.1 | 0.3 | 16 | 1 |
| 6047001602 | 54.63 | 92.95 | 90-95% | 7243 | Merced | 22.2 | 73.2 | 4.6 | 63.3 | 7.6 | 6.2 | 0.2 | 21.4 | 1.3 |
| 6037302301 | 54.62 | 92.94 | 90-95% | 3790 | Los Angeles | 9.8 | 76.7 | 13.5 | 21.1 | 51.1 | 1.7 | 0.3 | 23.5 | 2.3 |
| 6071001104 | 54.61 | 92.92 | 90-95% | 5058 | San Bernardino | 13.4 | 71.9 | 14.7 | 60.3 | 32.6 | 2.4 | 0.2 | 3 | 1.5 |
| 6039000900 | 54.57 | 92.91 | 90-95% | 9612 | Madera | 22.8 | 72.8 | 4.4 | 91.3 | 3.5 | 3 | 0.6 | 1.1 | 0.5 |
| 6037540300 | 54.54 | 92.90 | 90-95% | 5267 | Los Angeles | 16.5 | 77.6 | 5.9 | 95.3 | 1.3 | 2.4 | 0.2 | 0.2 | 0.5 |
| 6037404600 | 54.52 | 92.89 | 90-95% | 1422 | Los Angeles | 12.9 | 76.5 | 10.6 | 90.6 | 6.1 | 0.4 | 0.1 | 2 | 0.8 |
| 6077002503 | 54.51 | 92.87 | 90-95% | 2560 | San Joaquin | 22.9 | 68.4 | 8.7 | 45.1 | 4.5 | 17.7 | 0.5 | 28.9 | 3.3 |
| 6071009400 | 54.51 | 92.86 | 90-95% | 3493 | San Bernardino | 18.9 | 73 | 8.1 | 44.9 | 26.5 | 20.2 | 1.1 | 2.4 | 5 |
| 6037602802 | 54.50 | 92.85 | 90-95% | 4304 | Los Angeles | 12.8 | 73.5 | 13.7 | 32.6 | 1.5 | 62 | 0.1 | 1.8 | 1.9 |
| 6037533501 | 54.49 | 92.84 | 90-95% | 3090 | Los Angeles | 16.5 | 77 | 6.5 | 97.9 | 1.4 | 0.3 | 0 | 0.1 | 0.2 |
| 6029001600 | 54.49 | 92.82 | 90-95% | 1390 | Kern | 13.4 | 69.8 | 16.8 | 40.9 | 37.2 | 11.2 | 2.4 | 5.5 | 2.8 |
| 6037575300 | 54.49 | 92.81 | 90-95% | 4947 | Los Angeles | 18.2 | 73.7 | 8.1 | 58.6 | 2.7 | 15.8 | 0.5 | 20 | 2.3 |
| 6059089003 | 54.46 | 92.80 | 90-95% | 4012 | Orange | 17.8 | 76.4 | 5.8 | 60 | 7.6 | 0.7 | 0.2 | 30.3 | 1.2 |
| 6037190520 | 54.46 | 92.79 | 90-95% | 3728 | Los Angeles | 9.1 | 77.4 | 13.5 | 37.8 | 42.7 | 2.5 | 0.1 | 14.4 | 2.5 |
| 6019002501 | 54.46 | 92.77 | 90-95% | 5098 | Fresno | 23.6 | 71.5 | 4.9 | 63.7 | 7.7 | 8.9 | 0.8 | 17.5 | 1.4 |
| 6037242000 | 54.46 | 92.76 | 90-95% | 3938 | Los Angeles | 20.8 | 73 | 6.2 | 65.2 | 0.7 | 33 | 0.2 | 0.4 | 0.6 |
| 6071001308 | 54.45 | 92.75 | 90-95% | 5100 | San Bernardino | 17.2 | 77.5 | 5.3 | 79.4 | 11.5 | 4.7 | 0.2 | 3.5 | 0.6 |
| 6071004101 | 54.41 | 92.74 | 90-95% | 5698 | San Bernardino | 18.9 | 75.9 | 5.2 | 80.1 | 10.6 | 6.2 | 0.2 | 1.9 | 1 |
| 6037296220 | 54.40 | 92.72 | 90-95% | 4307 | Los Angeles | 15.4 | 74.1 | 10.5 | 65.2 | 13 | 11.4 | 0.2 | 8.1 | 2.1 |
| 6037602700 | 54.38 | 92.71 | 90-95% | 3045 | Los Angeles | 9.3 | 72.8 | 17.9 | 14 | 2 | 79.8 | 0.2 | 2.2 | 1.7 |
| 6037294820 | 54.38 | 92.70 | 90-95% | 3579 | Los Angeles | 21 | 75.3 | 3.7 | 94.3 | 2.4 | 2 | 0.5 | 0.6 | 0.1 |
| 6037531102 | 54.37 | 92.69 | 90-95% | 3548 | Los Angeles | 19.1 | 71.3 | 9.6 | 98.2 | 0.6 | 0.7 | 0 | 0.3 | 0.1 |
| 6071001101 | 54.37 | 92.67 | 90-95% | 4092 | San Bernardino | 18.8 | 76.2 | 5 | 80.8 | 11.6 | 3.3 | 0.1 | 3.2 | 0.9 |
| 6037228420 | 54.35 | 92.66 | 90-95% | 3150 | Los Angeles | 20 | 76.7 | 3.3 | 88.3 | 0.4 | 10.5 | 0 | 0.1 | 0.7 |
| 6037127210 | 54.34 | 92.65 | 90-95% | 5531 | Los Angeles | 14.8 | 76.4 | 8.8 | 61.7 | 20 | 6.1 | 0.1 | 10.4 | 1.7 |
| 6037531503 | 54.32 | 92.63 | 90-95% | 3116 | Los Angeles | 17.3 | 75.8 | 6.9 | 98.1 | 1.5 | 0.1 | 0 | 0.1 | 0.2 |
| 6099001603 | 54.31 | 92.62 | 90-95% | 5706 | Stanislaus | 19 | 74.4 | 6.6 | 67.1 | 20.9 | 2.4 | 0.4 | 7.1 | 2.2 |
| 6037195720 | 54.30 | 92.61 | 90-95% | 2304 | Los Angeles | 10.8 | 81.1 | 8.1 | 72.4 | 17.1 | 1.2 | 0.2 | 7.5 | 1.6 |
| 6107000501 | 54.26 | 92.60 | 90-95% | 6712 | Tulare | 21.1 | 72.3 | 6.6 | 93.1 | 5.9 | 0.1 | 0.1 | 0.5 | 0.3 |
| 6037603005 | 54.26 | 92.58 | 90-95% | 5591 | Los Angeles | 15.5 | 77.8 | 6.7 | 46.3 | 4.8 | 32.4 | 0.1 | 13.8 | 2.5 |
| 6037201402 | 54.25 | 92.57 | 90-95% | 4311 | Los Angeles | 12 | 69.8 | 18.2 | 76.6 | 3.7 | 0.5 | 0.3 | 18.6 | 0.3 |
| 6065041001 | 54.19 | 92.56 | 90-95% | 2832 | Riverside | 18.7 | 76 | 5.3 | 77.4 | 16.1 | 3.4 | 0.4 | 1.9 | 0.9 |

| | | | | | | | | | | | | | | |
|---|---|---|---|---|---|---|---|---|---|---|---|---|---|---|
| 6019008301 | 54.18 | 92.55 | 90-95% | 5989 | Fresno | 21.2 | 74.6 | 4.2 | 96.5 | 2.3 | 0.3 | 0.2 | 0.5 | 0.2 |
| 6037190802 | 54.18 | 92.53 | 90-95% | 2784 | Los Angeles | 8.3 | 82.5 | 9.2 | 50.1 | 34.9 | 4.2 | 0.2 | 8.8 | 1.8 |
| 6071004202 | 54.15 | 92.52 | 90-95% | 5176 | San Bernardino | 17.6 | 71.6 | 10.8 | 67.5 | 4.6 | 23.9 | 0.5 | 2.3 | 1.2 |
| 6037540502 | 54.13 | 92.51 | 90-95% | 6552 | Los Angeles | 23.1 | 74.2 | 2.7 | 84.1 | 1.8 | 13 | 0.1 | 0.5 | 0.6 |
| 6037570404 | 54.04 | 92.50 | 90-95% | 3501 | Los Angeles | 17.2 | 77.5 | 5.3 | 66.6 | 3.6 | 22.7 | 0.7 | 5.2 | 1.3 |
| 6037236100 | 54.01 | 92.48 | 90-95% | 5265 | Los Angeles | 12.2 | 70.5 | 17.3 | 17.6 | 1.7 | 71.4 | 0.2 | 6.4 | 2.7 |
| 6037407701 | 54.00 | 92.47 | 90-95% | 5401 | Los Angeles | 16 | 74.6 | 9.4 | 86 | 2.3 | 1.2 | 0.1 | 9.7 | 0.7 |
| 6013365002 | 54.00 | 92.46 | 90-95% | 5462 | Contra Costa | 18.8 | 76 | 5.2 | 54 | 3.1 | 30.9 | 0.2 | 8.7 | 3.1 |
| 6037531502 | 54.00 | 92.45 | 90-95% | 3273 | Los Angeles | 19.4 | 74.1 | 6.5 | 98 | 1.2 | 0.1 | 0 | 0.2 | 0.5 |
| 6037433304 | 53.96 | 92.43 | 90-95% | 4726 | Los Angeles | 15.1 | 73.4 | 11.5 | 65.5 | 3.7 | 1.2 | 0.1 | 28.9 | 0.6 |
| 6077002202 | 53.96 | 92.42 | 90-95% | 5417 | San Joaquin | 22.6 | 71.1 | 6.3 | 69.6 | 3.2 | 11.4 | 0.3 | 13.7 | 1.9 |
| 6071006401 | 53.95 | 92.41 | 90-95% | 3343 | San Bernardino | 24.1 | 71.6 | 4.3 | 77.1 | 6.7 | 11.6 | 0.4 | 3.1 | 1.2 |
| 6037291110 | 53.94 | 92.40 | 90-95% | 3510 | Los Angeles | 17.2 | 74.5 | 8.3 | 42.1 | 0.8 | 54 | 0.1 | 0.7 | 2.4 |
| 6037434003 | 53.90 | 92.38 | 90-95% | 4273 | Los Angeles | 17.5 | 75.4 | 7.1 | 85.8 | 4.1 | 0.2 | 0.1 | 9.3 | 0.4 |
| 6037206031 | 53.90 | 92.37 | 90-95% | 2957 | Los Angeles | 3.8 | 91.7 | 4.5 | 12.2 | 38.2 | 7.1 | 0.3 | 37.8 | 4.3 |
| 6037533300 | 53.89 | 92.36 | 90-95% | 3558 | Los Angeles | 20.5 | 74.6 | 4.9 | 97.9 | 1.8 | 0.1 | 0 | 0 | 0.1 |
| 6037240700 | 53.89 | 92.34 | 90-95% | 6161 | Los Angeles | 18 | 74.4 | 7.6 | 62.9 | 0.4 | 35.5 | 0 | 0.3 | 0.9 |
| 6037199900 | 53.88 | 92.33 | 90-95% | 2683 | Los Angeles | 15.7 | 73.7 | 10.6 | 79.3 | 1.3 | 1 | 0 | 17.9 | 0.5 |
| 6037535702 | 53.86 | 92.32 | 90-95% | 5522 | Los Angeles | 16.9 | 77.1 | 6 | 96.4 | 2.4 | 0.4 | 0 | 0.4 | 0.4 |
| 6099002702 | 53.86 | 92.31 | 90-95% | 6940 | Stanislaus | 18.9 | 74.5 | 6.6 | 65.6 | 24.4 | 1.5 | 0.3 | 6.2 | 2.1 |
| 6067006900 | 53.84 | 92.29 | 90-95% | 4763 | Sacramento | 13.1 | 73.3 | 13.6 | 31.1 | 45.2 | 11.4 | 1.1 | 6.8 | 4.3 |
| 6037575803 | 53.83 | 92.28 | 90-95% | 2837 | Los Angeles | 13.9 | 68.3 | 17.8 | 55.5 | 15.9 | 15.2 | 0.2 | 11 | 2.3 |
| 6037123301 | 53.81 | 92.27 | 90-95% | 4559 | Los Angeles | 11.4 | 79.8 | 8.8 | 45.6 | 22.6 | 4.7 | 0.2 | 25 | 1.8 |
| 6037302504 | 53.80 | 92.26 | 90-95% | 4234 | Los Angeles | 9.8 | 78.2 | 12 | 32.9 | 50.8 | 0.8 | 0 | 12.6 | 2.9 |
| 6085503105 | 53.78 | 92.24 | 90-95% | 2484 | Santa Clara | 13.5 | 73.2 | 13.3 | 31.5 | 4.6 | 0.8 | 0.6 | 61.2 | 1.2 |
| 6037533703 | 53.76 | 92.23 | 90-95% | 4236 | Los Angeles | 19.4 | 75.4 | 5.2 | 98.1 | 1.3 | 0 | 0.1 | 0.3 | 0.1 |
| 6037209402 | 53.74 | 92.22 | 90-95% | 3728 | Los Angeles | 15.5 | 79.8 | 4.7 | 86.1 | 4.7 | 3.3 | 0.2 | 5.2 | 0.5 |
| 6037502802 | 53.72 | 92.21 | 90-95% | 1380 | Los Angeles | 10.3 | 55.7 | 34 | 65.8 | 13.5 | 8.6 | 0.4 | 11.1 | 0.7 |
| 6037228310 | 53.71 | 92.19 | 90-95% | 4449 | Los Angeles | 18.9 | 76.7 | 4.4 | 92.3 | 0.5 | 6.5 | 0 | 0.1 | 0.5 |
| 6037296600 | 53.70 | 92.18 | 90-95% | 5218 | Los Angeles | 14.8 | 76.3 | 8.9 | 70.8 | 18 | 5.9 | 0.4 | 3.2 | 1.7 |
| 6037231400 | 53.70 | 92.17 | 90-95% | 4688 | Los Angeles | 14.8 | 76.8 | 8.4 | 63.3 | 1.4 | 31.2 | 0.2 | 2.5 | 1.5 |
| 6037402102 | 53.64 | 92.16 | 90-95% | 4815 | Los Angeles | 15.6 | 76.3 | 8.1 | 65.4 | 11.2 | 15.4 | 0.1 | 6 | 1.9 |
| 6013377000 | 53.63 | 92.14 | 90-95% | 6962 | Contra Costa | 18.2 | 74.3 | 7.5 | 63.1 | 7 | 23 | 0.2 | 4.8 | 1.9 |
| 6037570501 | 53.62 | 92.13 | 90-95% | 7419 | Los Angeles | 15.5 | 78.3 | 6.2 | 55.3 | 11.7 | 16 | 0.2 | 14.4 | 2.5 |
| 6037402101 | 53.61 | 92.12 | 90-95% | 4623 | Los Angeles | 14.5 | 78.4 | 7.1 | 70.9 | 5.1 | 13.7 | 0.2 | 8.3 | 1.8 |
| 6037311801 | 53.60 | 92.10 | 90-95% | 3033 | Los Angeles | 10.8 | 81.1 | 8.1 | 43.6 | 40.9 | 4.1 | 0.1 | 8 | 3.2 |
| 6037195710 | 53.59 | 92.09 | 90-95% | 4328 | Los Angeles | 11.9 | 79.6 | 8.5 | 68.9 | 12.8 | 2.6 | 0.2 | 13.9 | 1.5 |
| 6037433305 | 53.58 | 92.08 | 90-95% | 4893 | Los Angeles | 18.7 | 75.2 | 6.1 | 77.1 | 2.8 | 0.6 | 0.1 | 19.1 | 0.3 |
| 6037603704 | 53.57 | 92.07 | 90-95% | 6348 | Los Angeles | 18.7 | 77.5 | 3.8 | 58 | 5.1 | 28.9 | 0.1 | 6.2 | 1.6 |
| 6037602508 | 53.55 | 92.05 | 90-95% | 7022 | Los Angeles | 17.2 | 76.9 | 5.9 | 52.5 | 5.3 | 34.8 | 0.1 | 5 | 2.2 |
| 6037534001 | 53.54 | 92.04 | 90-95% | 5613 | Los Angeles | 18.2 | 76.9 | 4.9 | 97 | 2.2 | 0.1 | 0.3 | 0.4 | 0.1 |
| 6037241300 | 53.51 | 92.03 | 90-95% | 2313 | Los Angeles | 17.5 | 72.9 | 9.6 | 51.7 | 1 | 45.1 | 0.1 | 0.4 | 1.8 |
| 6037573300 | 53.51 | 92.02 | 90-95% | 4323 | Los Angeles | 16.2 | 77.9 | 5.9 | 37 | 3.5 | 15.9 | 0.2 | 41.8 | 1.6 |
| 6071009117 | 53.50 | 92.00 | 90-95% | 8267 | San Bernardino | 15 | 78.9 | 6.1 | 56 | 25.2 | 14.2 | 0.3 | 1.6 | 2.6 |
| 6037121801 | 53.46 | 91.99 | 90-95% | 3942 | Los Angeles | 16.5 | 78.4 | 5.1 | 75.8 | 13.2 | 3.6 | 0.3 | 5.5 | 1.6 |
| 6099000602 | 53.45 | 91.98 | 90-95% | 2953 | Stanislaus | 13.6 | 77.3 | 9.1 | 41.8 | 43.1 | 4.1 | 0.3 | 7.5 | 3.2 |
| 6037232110 | 53.45 | 91.97 | 90-95% | 3191 | Los Angeles | 16.7 | 76.7 | 6.6 | 70.7 | 0.5 | 27.2 | 0 | 0.1 | 1.4 |
| 6047002401 | 53.44 | 91.95 | 90-95% | 1756 | Merced | 14.8 | 73.5 | 11.7 | 49.3 | 46.6 | 1 | 0.3 | 0.9 | 1.9 |
| 6099000510 | 53.43 | 91.94 | 90-95% | 8480 | Stanislaus | 16.7 | 76.6 | 6.7 | 51 | 39.3 | 2.7 | 0.3 | 4 | 2.7 |
| 6037570603 | 53.43 | 91.93 | 90-95% | 4435 | Los Angeles | 19.8 | 73.5 | 6.7 | 23.6 | 9.7 | 54.8 | 0.2 | 8.5 | 3.3 |
| 6065046500 | 53.41 | 91.92 | 90-95% | 9277 | Riverside | 4.1 | 95.4 | 0.5 | 27.6 | 18.8 | 8.3 | 0.2 | 41.2 | 4 |
| 6037302202 | 53.41 | 91.90 | 90-95% | 5254 | Los Angeles | 9.8 | 75.9 | 14.3 | 23.8 | 59.7 | 1 | 0 | 12.1 | 3.4 |
| 6037404801 | 53.41 | 91.89 | 90-95% | 7305 | Los Angeles | 15.7 | 75 | 9.3 | 76.6 | 4.1 | 0.7 | 0 | 17.9 | 0.6 |
| 6037551800 | 53.40 | 91.88 | 90-95% | 7533 | Los Angeles | 13.9 | 77.4 | 8.7 | 64.8 | 17.4 | 7.3 | 0.3 | 8.8 | 1.4 |
| 6037224420 | 53.36 | 91.87 | 90-95% | 2369 | Los Angeles | 13.2 | 78.3 | 8.5 | 82.8 | 5.3 | 6.8 | 0.3 | 4.3 | 0.6 |
| 6037535102 | 53.36 | 91.85 | 90-95% | 4517 | Los Angeles | 19 | 75 | 6 | 81.4 | 0.3 | 17.5 | 0.2 | 0.2 | 0.5 |
| 6037502004 | 53.34 | 91.84 | 90-95% | 4359 | Los Angeles | 16.6 | 77 | 6.4 | 89.1 | 7.6 | 0.5 | 0 | 2.4 | 0.3 |
| 6037231100 | 53.31 | 91.83 | 90-95% | 3350 | Los Angeles | 13.5 | 81.3 | 5.2 | 72.4 | 4 | 20.1 | 0.8 | 1.4 | 1.2 |
| 6037197500 | 53.27 | 91.81 | 90-95% | 3889 | Los Angeles | 9.7 | 82 | 8.3 | 57.9 | 24.7 | 1.7 | 0.2 | 13.7 | 1.9 |
| 6065042902 | 53.27 | 91.80 | 90-95% | 4930 | Riverside | 16 | 73.4 | 10.6 | 65.5 | 26.8 | 4.7 | 0.3 | 1.2 | 1.4 |
| 6037533701 | 53.27 | 91.79 | 90-95% | 3934 | Los Angeles | 19.5 | 74.5 | 6 | 96.8 | 2.4 | 0.3 | 0 | 0.3 | 0.3 |
| 6037576301 | 53.26 | 91.78 | 90-95% | 4176 | Los Angeles | 14.3 | 77 | 8.7 | 51.2 | 14.7 | 19.7 | 0.2 | 11.6 | 2.6 |
| 6019002905 | 53.26 | 91.76 | 90-95% | 2889 | Fresno | 20.2 | 72.2 | 7.6 | 57.1 | 17.2 | 9 | 1 | 13.5 | 2.2 |
| 6037218210 | 53.23 | 91.75 | 90-95% | 4457 | Los Angeles | 15 | 76.2 | 8.8 | 71.4 | 3.2 | 22.5 | 0 | 1 | 1.8 |
| 6029001902 | 53.21 | 91.74 | 90-95% | 4679 | Kern | 18 | 76 | 6 | 51.5 | 34.2 | 9.1 | 0.8 | 1.9 | 2.5 |
| 6037204200 | 53.19 | 91.73 | 90-95% | 3303 | Los Angeles | 17.5 | 75.1 | 7.4 | 94 | 1.5 | 0.5 | 0 | 3.5 | 0.5 |

| | | | | | | | | | | | | | | | |
|---|---|---|---|---|---|---|---|---|---|---|---|---|---|---|---|
| 6037237201 | 53.19 | 91.71 | 90-95% | 3506 | Los Angeles | 16.2 | 77 | 6.8 | 74.6 | 0.9 | 22.8 | 0.1 | 0.3 | 1.2 |
| 6037530602 | 53.19 | 91.70 | 90-95% | 1590 | Los Angeles | 14.9 | 74.8 | 10.3 | 92.1 | 2.5 | 0.8 | 0.7 | 3.6 | 0.3 |
| 6037502100 | 53.18 | 91.69 | 90-95% | 5110 | Los Angeles | 12.9 | 69.9 | 17.2 | 81 | 14.7 | 1 | 0.2 | 2.4 | 0.8 |
| 6037533402 | 53.16 | 91.68 | 90-95% | 4105 | Los Angeles | 17.3 | 76.3 | 6.4 | 98.1 | 1.3 | 0.1 | 0.2 | 0.1 | 0.2 |
| 6037405101 | 53.15 | 91.66 | 90-95% | 5304 | Los Angeles | 15 | 76 | 9 | 81.1 | 4.5 | 0.8 | 0.1 | 13 | 0.4 |
| 6037301502 | 53.14 | 91.65 | 90-95% | 6908 | Los Angeles | 8.6 | 77 | 14.4 | 8.6 | 77.7 | 1.1 | 0 | 7.6 | 4.9 |
| 6025012200 | 53.14 | 91.64 | 90-95% | 7804 | Imperial | 15.3 | 74.7 | 10 | 98.1 | 1.1 | 0.1 | 0 | 0.5 | 0.1 |
| 6071002402 | 53.11 | 91.63 | 90-95% | 8434 | San Bernardino | 20 | 76.2 | 3.8 | 88 | 6.7 | 3.5 | 0.1 | 0.9 | 0.8 |
| 6037219010 | 53.11 | 91.61 | 90-95% | 2814 | Los Angeles | 15.2 | 75.3 | 9.5 | 65.7 | 2.6 | 26.9 | 0 | 2.8 | 2.1 |
| 6029004402 | 53.09 | 91.60 | 90-95% | 5437 | Kern | 22.7 | 70.9 | 6.4 | 91.9 | 3.8 | 3.2 | 0.2 | 0.4 | 0.5 |
| 6065042901 | 53.04 | 91.59 | 90-95% | 7385 | Riverside | 18 | 73.5 | 8.5 | 74.4 | 16.6 | 5.9 | 0.2 | 1.3 | 1.5 |
| 6037576302 | 53.03 | 91.58 | 90-95% | 4101 | Los Angeles | 17.5 | 78.6 | 3.9 | 59.4 | 7.8 | 16.6 | 0.1 | 14.1 | 2.1 |
| 6037552302 | 53.02 | 91.56 | 90-95% | 3648 | Los Angeles | 12.7 | 68.7 | 18.6 | 60.6 | 18.7 | 5.4 | 0.2 | 13.4 | 1.7 |
| 6037542000 | 53.02 | 91.55 | 90-95% | 5732 | Los Angeles | 18.1 | 75.1 | 6.8 | 71.1 | 0.9 | 25.6 | 0.6 | 1.1 | 0.7 |
| 6037207103 | 53.01 | 91.54 | 90-95% | 2077 | Los Angeles | 9 | 70.2 | 20.8 | 10.4 | 2.1 | 0.8 | 0.2 | 86 | 0.5 |
| 6037231500 | 53.01 | 91.52 | 90-95% | 4752 | Los Angeles | 12.8 | 75 | 12.2 | 54 | 1.2 | 40.7 | 0.1 | 2.4 | 1.6 |
| 6037575901 | 52.97 | 91.51 | 90-95% | 3454 | Los Angeles | 16.5 | 79.1 | 4.4 | 51.2 | 15.6 | 22.3 | 0.5 | 7.3 | 3.1 |
| 6037190901 | 52.96 | 91.50 | 90-95% | 4742 | Los Angeles | 12.5 | 81.6 | 5.9 | 76.1 | 14 | 3.6 | 0.1 | 5 | 1.1 |
| 6099003803 | 52.95 | 91.49 | 90-95% | 3004 | Stanislaus | 17.7 | 75.9 | 6.4 | 64.2 | 24.1 | 0.7 | 0.2 | 8.8 | 1.9 |
| 6037121101 | 52.91 | 91.47 | 90-95% | 2932 | Los Angeles | 14.4 | 78.2 | 7.4 | 69.6 | 17.2 | 2 | 0.2 | 9.8 | 1.3 |
| 6059086802 | 52.85 | 91.46 | 90-95% | 5913 | Orange | 14.8 | 77.4 | 7.8 | 55 | 19 | 2.8 | 0.2 | 21.5 | 1.6 |
| 6037191620 | 52.82 | 91.45 | 90-95% | 2789 | Los Angeles | 11.2 | 66.6 | 22.2 | 60.3 | 20.2 | 3.6 | 0.3 | 14.2 | 1.4 |
| 6037124204 | 52.82 | 91.44 | 90-95% | 3071 | Los Angeles | 12.8 | 82.4 | 4.8 | 63.9 | 23.2 | 4.7 | 0.3 | 5.7 | 2.3 |
| 6037228500 | 52.80 | 91.42 | 90-95% | 5220 | Los Angeles | 21.1 | 75.1 | 3.8 | 89.2 | 0.6 | 9.4 | 0 | 0.1 | 0.7 |
| 6037533702 | 52.80 | 91.41 | 90-95% | 3585 | Los Angeles | 18.8 | 76.5 | 4.7 | 97.2 | 2 | 0.2 | 0 | 0.6 | 0.1 |
| 6037231600 | 52.79 | 91.40 | 90-95% | 7110 | Los Angeles | 15.3 | 76.5 | 8.2 | 65.7 | 1.5 | 29.7 | 0.1 | 1.4 | 1.6 |
| 6037201700 | 52.79 | 91.39 | 90-95% | 5093 | Los Angeles | 11 | 80.7 | 8.3 | 65.1 | 7.9 | 6.7 | 0.4 | 17.9 | 1.9 |
| 6047001601 | 52.79 | 91.37 | 90-95% | 4498 | Merced | 23.8 | 72.6 | 3.6 | 79 | 6 | 6.4 | 0.3 | 7.3 | 1 |
| 6019006602 | 52.78 | 91.36 | 90-95% | 5597 | Fresno | 19 | 70.7 | 10.3 | 87.6 | 9.1 | 0.1 | 0.3 | 2.2 | 0.6 |
| 6071001812 | 52.72 | 91.35 | 90-95% | 4321 | San Bernardino | 18.9 | 73.1 | 8 | 85.2 | 5.7 | 3.6 | 0.2 | 3.8 | 1.5 |
| 6037211122 | 52.70 | 91.34 | 90-95% | 3075 | Los Angeles | 10.9 | 83.7 | 5.4 | 47 | 10.1 | 6.9 | 0.5 | 34 | 1.5 |
| 6037407200 | 52.69 | 91.32 | 90-95% | 7315 | Los Angeles | 15 | 75.4 | 9.6 | 89.1 | 4.9 | 1.2 | 0.1 | 4.2 | 0.4 |
| 6029003000 | 52.69 | 91.31 | 90-95% | 7374 | Kern | 20.6 | 72.7 | 6.7 | 72.9 | 14.9 | 8.6 | 0.7 | 1.5 | 1.4 |
| 6037543306 | 52.69 | 91.30 | 90-95% | 7214 | Los Angeles | 11.4 | 74.4 | 14.2 | 32.3 | 7.7 | 20.2 | 0.3 | 36.9 | 2.6 |
| 6037211320 | 52.69 | 91.29 | 90-95% | 3184 | Los Angeles | 12 | 81.4 | 6.6 | 60.6 | 8.4 | 4.6 | 0.1 | 24.9 | 1.3 |
| 6037218300 | 52.68 | 91.27 | 90-95% | 5520 | Los Angeles | 12.2 | 78 | 9.8 | 52.8 | 6.8 | 33.7 | 0.2 | 3.4 | 3.1 |
| 6037301701 | 52.67 | 91.26 | 90-95% | 2849 | Los Angeles | 8.1 | 74 | 17.9 | 21.7 | 56.2 | 1.2 | 0.4 | 16.4 | 4.1 |
| 6107004200 | 52.66 | 91.25 | 90-95% | 6529 | Tulare | 22.5 | 71.8 | 5.7 | 80.4 | 15.6 | 2.5 | 0.2 | 0.7 | 0.6 |
| 6037600502 | 52.62 | 91.23 | 90-95% | 2355 | Los Angeles | 12.7 | 76 | 11.3 | 49.5 | 1.9 | 45.6 | 0.3 | 1.5 | 1.2 |
| 6099000805 | 52.59 | 91.22 | 90-95% | 6188 | Stanislaus | 15.6 | 73.3 | 11.1 | 39.4 | 45.2 | 4 | 0.7 | 6.8 | 3.9 |
| 6107000302 | 52.59 | 91.21 | 90-95% | 3427 | Tulare | 20.1 | 73.3 | 6.6 | 83.6 | 14.7 | 0 | 0.6 | 0.5 | 0.6 |
| 6037531000 | 52.58 | 91.20 | 90-95% | 5629 | Los Angeles | 17.3 | 74.1 | 8.6 | 97.4 | 1.3 | 0.3 | 0.2 | 0.7 | 0.2 |
| 6059087405 | 52.58 | 91.18 | 90-95% | 5912 | Orange | 21.3 | 74.3 | 4.4 | 85.5 | 8.4 | 0.9 | 0.2 | 4.1 | 0.9 |
| 6037296500 | 52.54 | 91.17 | 90-95% | 3910 | Los Angeles | 15.5 | 75.3 | 9.2 | 72.8 | 13.2 | 9.1 | 0.2 | 3.5 | 1.1 |
| 6001407300 | 52.54 | 91.16 | 90-95% | 2598 | Alameda | 14.4 | 79.7 | 5.9 | 63.1 | 13.2 | 12.7 | 0.1 | 9.2 | 1.8 |
| 6037432601 | 52.53 | 91.15 | 90-95% | 6564 | Los Angeles | 14.1 | 76.4 | 9.5 | 60 | 5.1 | 0.5 | 0.1 | 33.5 | 0.8 |
| 6059001202 | 52.52 | 91.13 | 90-95% | 3586 | Orange | 18 | 74.1 | 7.9 | 80 | 14.6 | 1.1 | 0 | 3.6 | 0.8 |
| 6077000402 | 52.48 | 91.12 | 90-95% | 4582 | San Joaquin | 18 | 71.9 | 10.1 | 47.6 | 25.4 | 16.8 | 0.8 | 5.5 | 3.9 |
| 6037534501 | 52.47 | 91.11 | 90-95% | 5201 | Los Angeles | 15.9 | 76.5 | 7.6 | 96.8 | 2.2 | 0.2 | 0.1 | 0.3 | 0.4 |
| 6067004501 | 52.47 | 91.10 | 90-95% | 3529 | Sacramento | 19.5 | 74.1 | 6.4 | 48.6 | 8.3 | 7.3 | 0.5 | 32.7 | 2.6 |
| 6037540203 | 52.38 | 91.08 | 90-95% | 5594 | Los Angeles | 20.3 | 75.2 | 4.5 | 89.5 | 1.6 | 7.9 | 0.1 | 0.6 | 0.4 |
| 6059074003 | 52.37 | 91.07 | 90-95% | 3137 | Orange | 14.7 | 80.7 | 4.6 | 76.1 | 11.9 | 1.2 | 0.1 | 9.8 | 0.9 |
| 6037533403 | 52.33 | 91.06 | 90-95% | 2973 | Los Angeles | 15.6 | 75 | 9.4 | 95.9 | 2.5 | 0.6 | 0.2 | 0.7 | 0.1 |
| 6037199400 | 52.32 | 91.05 | 90-95% | 4668 | Los Angeles | 14 | 76.4 | 9.6 | 76.5 | 3.9 | 0.7 | 0.1 | 18 | 0.9 |
| 6037433200 | 52.29 | 91.03 | 90-95% | 6163 | Los Angeles | 14.7 | 75 | 10.3 | 70.4 | 4.7 | 0.4 | 0.1 | 24 | 0.4 |
| 6037542900 | 52.28 | 91.02 | 90-95% | 3285 | Los Angeles | 18.3 | 73.6 | 8.1 | 76.3 | 0.9 | 20.5 | 0.1 | 1.2 | 1.1 |
| 6067005002 | 52.27 | 91.01 | 90-95% | 6284 | Sacramento | 17 | 68.3 | 14.7 | 30.7 | 21.3 | 21.5 | 0.7 | 21.1 | 4.7 |
| 6037402405 | 52.26 | 91.00 | 90-95% | 3006 | Los Angeles | 15.9 | 76 | 8.1 | 83 | 2.8 | 11.9 | 0.1 | 1.5 | 0.7 |
| 6037541300 | 52.26 | 90.98 | 90-95% | 6044 | Los Angeles | 17.6 | 74.2 | 8.2 | 58.6 | 0.8 | 38.8 | 0.2 | 0.5 | 1.1 |
| 6037573003 | 52.24 | 90.97 | 90-95% | 1802 | Los Angeles | 13.5 | 78.7 | 7.8 | 46.6 | 18.7 | 14.8 | 0.4 | 16.9 | 2.6 |
| 6037228410 | 52.20 | 90.96 | 90-95% | 3320 | Los Angeles | 19.6 | 76.7 | 3.7 | 91.9 | 1 | 6.1 | 0 | 0.1 | 0.9 |
| 6071001307 | 52.20 | 90.94 | 90-95% | 4163 | San Bernardino | 15.5 | 76.8 | 7.7 | 78 | 14.2 | 2.1 | 0.4 | 4 | 1.2 |
| 6059086502 | 52.18 | 90.93 | 90-95% | 6551 | Orange | 20 | 75.8 | 4.2 | 92.3 | 4.2 | 0.5 | 0.2 | 2 | 0.6 |
| 6019005202 | 52.17 | 90.92 | 90-95% | 3619 | Fresno | 18.6 | 73.5 | 7.9 | 50.9 | 19.3 | 7 | 1 | 19.8 | 2 |
| 6037535607 | 52.15 | 90.91 | 90-95% | 4775 | Los Angeles | 17 | 77.6 | 5.4 | 97.5 | 1.5 | 0.7 | 0 | 0.2 | 0.1 |
| 6047002000 | 52.13 | 90.89 | 90-95% | 7835 | Merced | 15.4 | 71.3 | 13.3 | 51.2 | 45.1 | 0.7 | 0.2 | 1.3 | 1.5 |

| | | | | | | | | | | | | | | | |
|---|---|---|---|---|---|---|---|---|---|---|---|---|---|---|---|
| 6071004302 | 52.11 | 90.88 | 90-95% | 4413 | San Bernardino | 17.3 | 69.4 | 13.3 | 76.9 | 7.8 | 12.6 | 0.4 | 1.2 | 1.1 |
| 6037191720 | 52.10 | 90.87 | 90-95% | 3770 | Los Angeles | 12.6 | 79.3 | 8.1 | 73.3 | 13.4 | 3.2 | 0 | 9.2 | 1.1 |
| 6037186403 | 52.09 | 90.86 | 90-95% | 2899 | Los Angeles | 13 | 75.7 | 11.3 | 71.7 | 6.2 | 1 | 0.1 | 20.1 | 0.9 |
| 6037132101 | 52.08 | 90.84 | 90-95% | 4259 | Los Angeles | 14.2 | 77.9 | 7.9 | 50.4 | 31.5 | 6.6 | 0.1 | 8.6 | 2.7 |
| 6037540501 | 52.07 | 90.83 | 90-95% | 6943 | Los Angeles | 13.6 | 82.2 | 4.2 | 75.3 | 6.2 | 16.9 | 0 | 0.7 | 0.9 |
| 6065045303 | 52.07 | 90.82 | 90-95% | 3035 | Riverside | 21.8 | 72 | 6.2 | 94 | 4 | 1.1 | 0 | 0.7 | 0.2 |
| 6067007301 | 52.07 | 90.81 | 90-95% | 4644 | Sacramento | 17.8 | 74.3 | 7.9 | 25.2 | 51.7 | 12.5 | 1.1 | 3.8 | 5.8 |
| 6037240800 | 52.05 | 90.79 | 90-95% | 4377 | Los Angeles | 18.2 | 76.5 | 5.3 | 63.4 | 0.8 | 34 | 0.3 | 0.4 | 1 |
| 6065042620 | 52.05 | 90.78 | 90-95% | 10463 | Riverside | 19.1 | 76 | 4.9 | 65.3 | 13.5 | 12.2 | 0.2 | 6 | 2.8 |
| 6037222002 | 52.03 | 90.77 | 90-95% | 4655 | Los Angeles | 14.6 | 78.1 | 7.3 | 65.3 | 3 | 29.1 | 0 | 0.6 | 2 |
| 6037204300 | 52.02 | 90.76 | 90-95% | 4787 | Los Angeles | 15.1 | 72.8 | 12.1 | 94.9 | 1.6 | 0.2 | 0.2 | 2.7 | 0.4 |
| 6067004702 | 52.01 | 90.74 | 90-95% | 4945 | Sacramento | 19.4 | 72.1 | 8.5 | 39.9 | 16.9 | 18.4 | 0.6 | 19.7 | 4.4 |
| 6037209102 | 52.00 | 90.73 | 90-95% | 5267 | Los Angeles | 14.6 | 77.6 | 7.8 | 76.4 | 3.1 | 5.8 | 0.2 | 13.6 | 0.9 |
| 6037124201 | 51.93 | 90.72 | 90-95% | 3506 | Los Angeles | 11.5 | 78.1 | 10.4 | 57.9 | 30.6 | 2.4 | 0.1 | 6.9 | 2.1 |
| 6037301702 | 51.93 | 90.71 | 90-95% | 5556 | Los Angeles | 8.8 | 77.3 | 13.9 | 17.6 | 63.5 | 0.8 | 0.3 | 13.8 | 4.1 |
| 6037191201 | 51.90 | 90.69 | 90-95% | 4591 | Los Angeles | 6.2 | 77.2 | 16.6 | 29.9 | 50.5 | 3.2 | 0.3 | 13.2 | 2.9 |
| 6037199800 | 51.89 | 90.68 | 90-95% | 5631 | Los Angeles | 13.7 | 75.8 | 10.5 | 61.8 | 1.5 | 0.2 | 0.2 | 36 | 0.3 |
| 6037240010 | 51.88 | 90.67 | 90-95% | 3673 | Los Angeles | 19.8 | 74.7 | 5.5 | 75.4 | 0.8 | 22.9 | 0.2 | 0.3 | 0.5 |
| 6025011500 | 51.87 | 90.65 | 90-95% | 6232 | Imperial | 14.9 | 73.2 | 11.9 | 88.1 | 7.5 | 2.1 | 0.4 | 1.1 | 0.8 |
| 6037533804 | 51.84 | 90.64 | 90-95% | 4543 | Los Angeles | 17.4 | 76.4 | 6.2 | 94.8 | 3.7 | 0.1 | 0.4 | 0.5 | 0.5 |
| 6037543903 | 51.84 | 90.63 | 90-95% | 3804 | Los Angeles | 12.2 | 73.8 | 14 | 43.1 | 8 | 5 | 0 | 41.4 | 2.5 |
| 6037433306 | 51.80 | 90.62 | 90-95% | 3333 | Los Angeles | 16.1 | 75.3 | 8.6 | 66 | 2.3 | 0.7 | 0.1 | 30.3 | 0.7 |
| 6037602103 | 51.78 | 90.60 | 90-95% | 6992 | Los Angeles | 15.7 | 75.7 | 8.6 | 68.3 | 4.8 | 19.7 | 0.3 | 4.7 | 2.2 |
| 6071000201 | 51.78 | 90.59 | 90-95% | 4195 | San Bernardino | 15.5 | 76.3 | 8.2 | 68.5 | 16.6 | 5.9 | 0.1 | 7.5 | 1.4 |
| 6037197700 | 51.77 | 90.58 | 90-95% | 5103 | Los Angeles | 9.8 | 80.1 | 10.1 | 30.1 | 9.6 | 2.3 | 0.2 | 56 | 1.7 |
| 6037553902 | 51.76 | 90.57 | 90-95% | 5809 | Los Angeles | 17.3 | 77.1 | 5.6 | 76.7 | 8.7 | 8.9 | 0.2 | 4.6 | 0.9 |
| 6037310703 | 51.73 | 90.55 | 90-95% | 5114 | Los Angeles | 9.6 | 79 | 11.4 | 17.9 | 66.4 | 2 | 0.1 | 8.8 | 4.8 |
| 6037240020 | 51.73 | 90.54 | 90-95% | 5055 | Los Angeles | 19.6 | 73.3 | 7.1 | 70.9 | 0.5 | 27.6 | 0 | 0.2 | 0.7 |
| 6037502700 | 51.71 | 90.53 | 90-95% | 6956 | Los Angeles | 12.7 | 74.5 | 12.8 | 87 | 7.8 | 1.4 | 0.5 | 2.6 | 0.7 |
| 6019002903 | 51.70 | 90.52 | 90-95% | 4329 | Fresno | 20.9 | 68.7 | 10.4 | 62 | 10.1 | 8.2 | 0.3 | 18 | 1.4 |
| 6037219020 | 51.69 | 90.50 | 90-95% | 4798 | Los Angeles | 15.3 | 75.1 | 9.6 | 64.7 | 2.8 | 27.7 | 0.3 | 2.6 | 1.9 |
| 6065041704 | 51.65 | 90.49 | 90-95% | 3908 | Riverside | 20.6 | 75.1 | 4.3 | 89.1 | 7.2 | 0.6 | 0.3 | 2 | 0.7 |
| 6037125320 | 51.63 | 90.48 | 90-95% | 4843 | Los Angeles | 8.3 | 82.9 | 8.8 | 36.4 | 38.5 | 10 | 0.2 | 10.8 | 4.3 |
| 6037602104 | 51.62 | 90.47 | 90-95% | 5416 | Los Angeles | 16.3 | 77.5 | 6.2 | 63.4 | 3.9 | 25.3 | 0.3 | 5 | 2 |
| 6019003003 | 51.60 | 90.45 | 90-95% | 4154 | Fresno | 19.4 | 70.5 | 10.1 | 49.8 | 18.2 | 8 | 0.5 | 21.1 | 2.4 |
| 6067006400 | 51.58 | 90.44 | 90-95% | 5347 | Sacramento | 16.4 | 75.3 | 8.3 | 28.9 | 40.5 | 13.5 | 1.1 | 11.8 | 4.4 |
| 6075023103 | 51.58 | 90.43 | 90-95% | 3725 | San Francisco | 21.4 | 73 | 5.6 | 16.2 | 3.5 | 55.8 | 0.3 | 18.1 | 6.1 |
| 6037540102 | 51.57 | 90.41 | 90-95% | 6972 | Los Angeles | 16.6 | 77.5 | 5.9 | 85.4 | 1.5 | 11.7 | 0.1 | 0.7 | 0.6 |
| 6037573202 | 51.56 | 90.40 | 90-95% | 6230 | Los Angeles | 16.7 | 78.2 | 5.1 | 58 | 3.2 | 17 | 0.2 | 20.1 | 1.5 |
| 6037575201 | 51.55 | 90.39 | 90-95% | 4667 | Los Angeles | 16.6 | 77.2 | 6.2 | 48.9 | 3.1 | 17.8 | 0.1 | 27.8 | 2.1 |
| 6037554301 | 51.53 | 90.38 | 90-95% | 3554 | Los Angeles | 16.4 | 78.1 | 5.5 | 62 | 11.4 | 18.1 | 0.1 | 6.6 | 1.9 |
| 6037231900 | 51.50 | 90.36 | 90-95% | 5968 | Los Angeles | 19.3 | 75.7 | 5 | 83.7 | 0.7 | 14.8 | 0.1 | 0.3 | 0.5 |
| 6037532604 | 51.48 | 90.35 | 90-95% | 2806 | Los Angeles | 19 | 77.2 | 3.8 | 96.7 | 1.5 | 0.7 | 0 | 0.9 | 0.2 |
| 6037127920 | 51.47 | 90.34 | 90-95% | 4100 | Los Angeles | 14 | 77.4 | 8.6 | 54.6 | 33.8 | 2.8 | 0.1 | 6.2 | 2.6 |
| 6037553504 | 51.47 | 90.33 | 90-95% | 5368 | Los Angeles | 17 | 77.6 | 5.4 | 81.4 | 3.9 | 9.1 | 0.1 | 4.9 | 0.6 |
| 6037533201 | 51.46 | 90.31 | 90-95% | 2805 | Los Angeles | 16.6 | 77.5 | 5.9 | 98.2 | 1.1 | 0.4 | 0.1 | 0.1 | 0.1 |
| 6001409500 | 51.44 | 90.30 | 90-95% | 3122 | Alameda | 18.9 | 75.2 | 5.9 | 67.8 | 2.3 | 24.4 | 0.4 | 3.6 | 1.6 |
| 6071000825 | 51.44 | 90.29 | 90-95% | 3905 | San Bernardino | 17 | 78.9 | 4.1 | 56.4 | 22 | 12.2 | 0.2 | 7.3 | 1.9 |
| 6019006501 | 51.43 | 90.28 | 90-95% | 6662 | Fresno | 24 | 70.7 | 5.3 | 91.2 | 6.2 | 0.2 | 0.3 | 1.3 | 0.8 |
| 6073003603 | 51.41 | 90.26 | 90-95% | 4228 | San Diego | 18.3 | 74.3 | 7.4 | 88.2 | 3.2 | 4.3 | 0.1 | 3.1 | 1.1 |
| 6037127103 | 51.40 | 90.25 | 90-95% | 2939 | Los Angeles | 14.9 | 79.9 | 5.2 | 61.7 | 25.9 | 5.2 | 0 | 5.2 | 2 |
| 6071006301 | 51.39 | 90.24 | 90-95% | 5324 | San Bernardino | 15.6 | 68.5 | 15.9 | 60.6 | 23.8 | 11.9 | 0.8 | 1.8 | 1.2 |
| 6037502200 | 51.39 | 90.23 | 90-95% | 6585 | Los Angeles | 13.4 | 75.4 | 11.2 | 86.3 | 10.5 | 0.7 | 0.2 | 1.5 | 0.8 |
| 6037120030 | 51.35 | 90.21 | 90-95% | 2675 | Los Angeles | 20.2 | 76.5 | 3.3 | 92.8 | 2.7 | 0.3 | 0 | 3.8 | 0.3 |
| 6019001600 | 51.33 | 90.20 | 90-95% | 5099 | Fresno | 15.4 | 72.2 | 12.4 | 65.7 | 23.5 | 0.8 | 0.5 | 8.1 | 1.5 |
| 6071001310 | 51.32 | 90.19 | 90-95% | 5814 | San Bernardino | 15.3 | 75 | 9.7 | 75.4 | 18.8 | 2.4 | 0.3 | 2.1 | 1 |
| 6037240402 | 51.31 | 90.18 | 90-95% | 3854 | Los Angeles | 16.8 | 74.9 | 8.3 | 57.2 | 1.1 | 38.8 | 0.3 | 0.3 | 2.2 |
| 6019007004 | 51.29 | 90.16 | 90-95% | 5520 | Fresno | 16.7 | 69.1 | 14.2 | 63 | 28.3 | 0.7 | 0.4 | 6 | 1.6 |
| 6037224600 | 51.28 | 90.15 | 90-95% | 3425 | Los Angeles | 18.3 | 74.7 | 7 | 86.4 | 2.5 | 8.8 | 0 | 1.2 | 1.1 |
| 6037575902 | 51.28 | 90.14 | 90-95% | 4762 | Los Angeles | 9.3 | 80.5 | 10.2 | 37.3 | 29.4 | 19.9 | 0.4 | 8.9 | 4.2 |
| 6071009500 | 51.28 | 90.12 | 90-95% | 7094 | San Bernardino | 17.8 | 72.2 | 10 | 44.9 | 34.1 | 13.9 | 1.3 | 2 | 3.8 |
| 6065048800 | 51.24 | 90.11 | 90-95% | 4512 | Riverside | 17.7 | 77.6 | 4.7 | 59.9 | 10.8 | 19.1 | 0.1 | 7.7 | 2.4 |
| 6071007603 | 51.24 | 90.10 | 90-95% | 4605 | San Bernardino | 17.4 | 71.5 | 11.1 | 53.4 | 20.2 | 17.3 | 0.5 | 6.7 | 1.9 |
| 6037191120 | 51.24 | 90.09 | 90-95% | 4135 | Los Angeles | 9.4 | 78.4 | 12.2 | 53.7 | 29.8 | 3.8 | 0.1 | 9.8 | 2.7 |
| 6113010102 | 51.23 | 90.07 | 90-95% | 7702 | Yolo | 15.6 | 73 | 11.4 | 42.9 | 44.2 | 2.3 | 0.6 | 6.3 | 3.7 |
| 6065031601 | 51.22 | 90.06 | 90-95% | 4390 | Riverside | 18.5 | 73.7 | 7.8 | 65.1 | 23.2 | 4.3 | 0.8 | 4.9 | 1.8 |

| | | | | | | | | | | | | | | | |
|---|---|---|---|---|---|---|---|---|---|---|---|---|---|---|---|
| 6037125310 | 51.22 | 90.05 | 90-95% | 4750 | Los Angeles | 11.1 | 81.8 | 7.1 | 47.5 | 36.3 | 8 | 0.2 | 5.2 | 2.8 |
| 6107004102 | 51.20 | 90.04 | 90-95% | 2028 | Tulare | 19.2 | 68 | 12.8 | 65.3 | 28.8 | 0.4 | 0.7 | 3.3 | 1.4 |
| 6047000505 | 51.19 | 90.02 | 90-95% | 6156 | Merced | 18.7 | 72.4 | 8.9 | 61.6 | 27.3 | 1.3 | 0.3 | 7.9 | 1.6 |
| 6037542103 | 51.19 | 90.01 | 90-95% | 4114 | Los Angeles | 19.7 | 75.5 | 4.8 | 83.5 | 0.8 | 14.4 | 0 | 0.8 | 0.5 |
| 6037240300 | 51.18 | 90.00 | 85-90% | 5691 | Los Angeles | 19.1 | 75.5 | 5.4 | 70.1 | 1.7 | 26.4 | 0.2 | 0.2 | 1.2 |
| 6071000203 | 51.17 | 89.99 | 85-90% | 4474 | San Bernardino | 13.6 | 76.5 | 9.9 | 65.4 | 18.6 | 4.1 | 0.2 | 10 | 1.5 |
| 6037218120 | 51.17 | 89.97 | 85-90% | 4530 | Los Angeles | 13.9 | 77.6 | 8.5 | 69 | 2.3 | 11.1 | 0.2 | 15.5 | 2 |
| 6037220000 | 51.17 | 89.96 | 85-90% | 5345 | Los Angeles | 13.3 | 76.7 | 10 | 49.5 | 2.5 | 42.9 | 0.2 | 2.4 | 2.5 |
| 6037482402 | 51.16 | 89.95 | 85-90% | 6971 | Los Angeles | 10.6 | 74.5 | 14.9 | 35.5 | 4.6 | 0.2 | 0.1 | 58.6 | 1 |
| 6037104810 | 51.15 | 89.94 | 85-90% | 5328 | Los Angeles | 16.5 | 76 | 7.5 | 93.8 | 3 | 0.5 | 0.1 | 2.3 | 0.4 |
| 6077000500 | 51.15 | 89.92 | 85-90% | 2749 | San Joaquin | 19.5 | 74.6 | 5.9 | 73.8 | 11.3 | 7.3 | 1.1 | 5.1 | 1.5 |
| 6037201501 | 51.12 | 89.91 | 85-90% | 5306 | Los Angeles | 14.4 | 75 | 10.6 | 85.4 | 4 | 0.7 | 0.3 | 9 | 0.6 |
| 6065040501 | 51.11 | 89.90 | 85-90% | 6878 | Riverside | 16.7 | 76.2 | 7.1 | 68.3 | 27.3 | 1.4 | 0.2 | 1.6 | 1.1 |
| 6067007413 | 51.10 | 89.89 | 85-90% | 5932 | Sacramento | 16.7 | 72.5 | 10.8 | 25.6 | 52.2 | 11 | 1.1 | 5.6 | 4.5 |
| 6099002504 | 51.10 | 89.87 | 85-90% | 4422 | Stanislaus | 15.4 | 77.6 | 7 | 59 | 29.6 | 2.7 | 0.8 | 4.9 | 2.9 |
| 6019003202 | 51.10 | 89.86 | 85-90% | 5265 | Fresno | 20.4 | 71.7 | 7.9 | 52 | 20.2 | 9.1 | 0.5 | 16.2 | 2.1 |
| 6071007305 | 51.09 | 89.85 | 85-90% | 4060 | San Bernardino | 16.3 | 74.2 | 9.5 | 33.8 | 26.4 | 9.5 | 0.3 | 26.6 | 3.4 |
| 6037224200 | 51.09 | 89.83 | 85-90% | 2392 | Los Angeles | 14.3 | 77.1 | 8.6 | 94.1 | 1.8 | 1.7 | 0 | 1.9 | 0.4 |
| 6037228320 | 51.08 | 89.82 | 85-90% | 3219 | Los Angeles | 19.8 | 76.2 | 4 | 89.2 | 0.3 | 10 | 0.1 | 0 | 0.3 |
| 6107000900 | 51.07 | 89.81 | 85-90% | 8171 | Tulare | 16.5 | 76.4 | 7.1 | 71.1 | 23.5 | 1.7 | 0.6 | 1.6 | 1.4 |
| 6037573002 | 51.06 | 89.80 | 85-90% | 3990 | Los Angeles | 20.6 | 76.1 | 3.3 | 71.4 | 3.3 | 16.6 | 0.4 | 7 | 1.3 |
| 6037294610 | 51.01 | 89.78 | 85-90% | 4065 | Los Angeles | 17.1 | 73.3 | 9.6 | 92.3 | 4.1 | 1.1 | 0.2 | 1.6 | 0.6 |
| 6037311802 | 50.99 | 89.77 | 85-90% | 3813 | Los Angeles | 10.9 | 82.8 | 6.3 | 48.7 | 31 | 4.5 | 0.6 | 12.4 | 2.9 |
| 6067001101 | 50.98 | 89.76 | 85-90% | 2047 | Sacramento | 3.1 | 88.5 | 8.4 | 16.1 | 61.3 | 8.9 | 0.5 | 9.1 | 4.1 |
| 6075980600 | 50.95 | 89.75 | 85-90% | 467 | San Francisco | 12.7 | 78.9 | 8.4 | 12.8 | 8.8 | 57 | 0 | 18.2 | 3.2 |
| 6029004102 | 50.93 | 89.73 | 85-90% | 5451 | Kern | 23.6 | 70.7 | 5.7 | 89.5 | 9 | 0.5 | 0.6 | 0.1 | 0.4 |
| 6037402904 | 50.92 | 89.72 | 85-90% | 3603 | Los Angeles | 15.4 | 76.7 | 7.9 | 86.8 | 7.7 | 1.9 | 0.4 | 2.3 | 0.9 |
| 6039000201 | 50.88 | 89.71 | 85-90% | 9049 | Madera | 3.4 | 94 | 2.6 | 38.8 | 28.9 | 23.9 | 1.7 | 0.9 | 5.8 |
| 6037128400 | 50.87 | 89.70 | 85-90% | 4114 | Los Angeles | 13 | 77.2 | 9.8 | 36.2 | 50.5 | 4.1 | 0.3 | 6.1 | 2.9 |
| 6073004000 | 50.87 | 89.68 | 85-90% | 5160 | San Diego | 20 | 74.4 | 5.6 | 86.3 | 2.8 | 8.7 | 0.2 | 1.1 | 0.9 |
| 6059001304 | 50.86 | 89.67 | 85-90% | 3803 | Orange | 16.5 | 70.4 | 13.1 | 75.7 | 19.5 | 0.9 | 0.1 | 2.8 | 1 |
| 6037531701 | 50.85 | 89.66 | 85-90% | 5718 | Los Angeles | 17.6 | 74.7 | 7.7 | 97.8 | 1.5 | 0.1 | 0.2 | 0.1 | 0.2 |
| 6037542105 | 50.85 | 89.65 | 85-90% | 5200 | Los Angeles | 20 | 74.9 | 5.1 | 80.6 | 1.1 | 16.9 | 0.2 | 0.4 | 0.7 |
| 6037408501 | 50.84 | 89.63 | 85-90% | 3314 | Los Angeles | 13.9 | 75.2 | 10.9 | 77.2 | 6.4 | 0.8 | 0.1 | 14.3 | 1.2 |
| 6019003701 | 50.80 | 89.62 | 85-90% | 3314 | Fresno | 17.7 | 73.5 | 8.8 | 62.8 | 22.9 | 5.8 | 0.7 | 6.1 | 1.8 |
| 6077005109 | 50.79 | 89.61 | 85-90% | 4016 | San Joaquin | 16.2 | 71.8 | 12 | 46.3 | 45 | 2 | 1 | 2.5 | 3.2 |
| 6037600303 | 50.76 | 89.60 | 85-90% | 3664 | Los Angeles | 18.6 | 75.8 | 5.6 | 50.1 | 0.7 | 46.6 | 0.1 | 0.5 | 2 |
| 6037210010 | 50.75 | 89.58 | 85-90% | 3520 | Los Angeles | 15.3 | 73.1 | 11.6 | 81 | 2.5 | 3 | 0 | 12.9 | 0.7 |
| 6037232800 | 50.73 | 89.57 | 85-90% | 3823 | Los Angeles | 17.5 | 77.7 | 4.8 | 80.5 | 0.7 | 17.1 | 0.3 | 0.4 | 1 |
| 6037601501 | 50.70 | 89.56 | 85-90% | 3890 | Los Angeles | 18.5 | 76.6 | 4.9 | 89.9 | 1.9 | 6.5 | 0.1 | 1.1 | 0.4 |
| 6037122120 | 50.69 | 89.54 | 85-90% | 5000 | Los Angeles | 16 | 76.3 | 7.7 | 86.1 | 7.3 | 0.7 | 0.2 | 4.9 | 0.8 |
| 6085512602 | 50.69 | 89.53 | 85-90% | 2997 | Santa Clara | 14.9 | 74.6 | 10.5 | 55.5 | 37.5 | 0.2 | 0.5 | 4.5 | 1.8 |
| 6019001411 | 50.68 | 89.52 | 85-90% | 5276 | Fresno | 20.4 | 74 | 5.6 | 41.8 | 27.6 | 7.1 | 0.4 | 20.9 | 2.4 |
| 6099002503 | 50.63 | 89.51 | 85-90% | 4368 | Stanislaus | 18.6 | 74.2 | 7.2 | 57.9 | 34.2 | 1.6 | 0.9 | 3.3 | 2.1 |
| 6037192610 | 50.62 | 89.49 | 85-90% | 4389 | Los Angeles | 12.7 | 79.8 | 7.5 | 74.1 | 8.1 | 2.4 | 0.3 | 13.6 | 1.6 |
| 6037433401 | 50.61 | 89.48 | 85-90% | 3371 | Los Angeles | 17.5 | 75.1 | 7.4 | 74.4 | 2.3 | 0.1 | 0.1 | 22.7 | 0.4 |
| 6037600304 | 50.61 | 89.47 | 85-90% | 3424 | Los Angeles | 19.7 | 75.7 | 4.6 | 58 | 1.5 | 38.8 | 0.1 | 0.2 | 1.4 |
| 6065042300 | 50.58 | 89.46 | 85-90% | 6782 | Riverside | 16.9 | 75.5 | 7.6 | 64.1 | 25.7 | 4.9 | 0.3 | 3.3 | 1.7 |
| 6037601402 | 50.57 | 89.44 | 85-90% | 5059 | Los Angeles | 13.8 | 78.9 | 7.3 | 88.2 | 4.2 | 5.3 | 0.2 | 1.5 | 0.7 |
| 6037575102 | 50.56 | 89.43 | 85-90% | 4510 | Los Angeles | 18.1 | 77.1 | 4.8 | 58.5 | 5.8 | 9.5 | 0.3 | 24 | 2 |
| 6065042510 | 50.56 | 89.42 | 85-90% | 5048 | Riverside | 17.3 | 77.5 | 5.2 | 65.8 | 12.6 | 14.3 | 0.2 | 5.5 | 1.5 |
| 6111002905 | 50.56 | 89.41 | 85-90% | 5478 | Ventura | 12.3 | 76.3 | 11.4 | 55.5 | 25.1 | 5.4 | 0.3 | 11.3 | 2.5 |
| 6037191500 | 50.55 | 89.39 | 85-90% | 5551 | Los Angeles | 13 | 77.8 | 9.2 | 60.7 | 17 | 1.4 | 0.2 | 19 | 1.7 |
| 6099000301 | 50.55 | 89.38 | 85-90% | 1987 | Stanislaus | 15.4 | 70.1 | 14.5 | 60.9 | 35.4 | 0.7 | 1.1 | 0.6 | 1.4 |
| 6047002302 | 50.53 | 89.37 | 85-90% | 13709 | Merced | 18.7 | 73.9 | 7.4 | 66.5 | 23.3 | 3.7 | 0.4 | 3.9 | 2.2 |
| 6037123103 | 50.52 | 89.36 | 85-90% | 4165 | Los Angeles | 14.8 | 77.9 | 7.3 | 62.1 | 25.4 | 2.8 | 0.1 | 7.4 | 2.3 |
| 6037405201 | 50.50 | 89.34 | 85-90% | 5205 | Los Angeles | 14.9 | 77.5 | 7.6 | 80.1 | 6.6 | 1.3 | 0.1 | 11.3 | 0.7 |
| 6037232200 | 50.49 | 89.33 | 85-90% | 3119 | Los Angeles | 15 | 76.9 | 8.1 | 62 | 1.4 | 34.9 | 0.1 | 0.2 | 1.4 |
| 6107004300 | 50.48 | 89.32 | 85-90% | 7682 | Tulare | 22.5 | 72.1 | 5.4 | 89.2 | 6.4 | 0.6 | 0.2 | 3.3 | 0.4 |
| 6037408630 | 50.47 | 89.31 | 85-90% | 2319 | Los Angeles | 14.7 | 75.5 | 9.8 | 73.3 | 9.1 | 0.4 | 0.6 | 15.1 | 1.5 |
| 6067000600 | 50.46 | 89.29 | 85-90% | 1122 | Sacramento | 6.4 | 85 | 8.6 | 24.9 | 48.3 | 16.4 | 1.1 | 3.7 | 5.6 |
| 6065040502 | 50.46 | 89.28 | 85-90% | 6202 | Riverside | 18.7 | 75.6 | 5.7 | 76.9 | 17.6 | 2.4 | 0.4 | 1.5 | 1.2 |
| 6037123510 | 50.45 | 89.27 | 85-90% | 4753 | Los Angeles | 13 | 74.1 | 12.9 | 49.9 | 37.1 | 2.8 | 0.1 | 7.8 | 2.2 |
| 6037553502 | 50.44 | 89.25 | 85-90% | 4183 | Los Angeles | 15.9 | 76.1 | 8 | 76.4 | 5.7 | 12.5 | 0.1 | 2.8 | 2.4 |
| 6037530101 | 50.44 | 89.24 | 85-90% | 5400 | Los Angeles | 13.9 | 72 | 14.1 | 85.5 | 9.1 | 0.6 | 0.1 | 3.8 | 0.9 |
| 6067005001 | 50.44 | 89.23 | 85-90% | 8107 | Sacramento | 16 | 72.3 | 11.7 | 30.4 | 17.9 | 15.6 | 0.6 | 32 | 3.5 |

| | | | | | | | | | | | | | | |
|---|---|---|---|---|---|---|---|---|---|---|---|---|---|---|
| 6037532002 | 50.39 | 89.22 | 85-90% | 3151 | Los Angeles | 16.2 | 72.1 | 11.7 | 91.3 | 5 | 0.2 | 0.1 | 3.1 | 0.4 |
| 6075023200 | 50.36 | 89.20 | 85-90% | 4582 | San Francisco | 13.4 | 76.5 | 10.1 | 38.8 | 4.5 | 38.9 | 0.3 | 14.8 | 2.6 |
| 6019005100 | 50.34 | 89.19 | 85-90% | 5723 | Fresno | 16.8 | 72.4 | 10.8 | 47.8 | 28.2 | 10.5 | 0.8 | 10 | 2.7 |
| 6037221810 | 50.33 | 89.18 | 85-90% | 2773 | Los Angeles | 9.4 | 82.3 | 8.3 | 51.1 | 18.4 | 8.3 | 0.2 | 18.8 | 3.2 |
| 6037601211 | 50.32 | 89.17 | 85-90% | 2823 | Los Angeles | 12.6 | 73.7 | 13.7 | 42.4 | 3 | 50.2 | 0.1 | 2.2 | 2.2 |
| 6037123420 | 50.30 | 89.15 | 85-90% | 4638 | Los Angeles | 15 | 76.9 | 8.1 | 56.9 | 32.8 | 2 | 0.2 | 6.2 | 1.9 |
| 6037433601 | 50.29 | 89.14 | 85-90% | 4923 | Los Angeles | 11.7 | 73.9 | 14.4 | 31.5 | 4 | 0.3 | 0.1 | 63.6 | 0.5 |
| 6001406000 | 50.28 | 89.13 | 85-90% | 3450 | Alameda | 9.4 | 76.8 | 13.8 | 21.3 | 16.7 | 12.1 | 0.3 | 46.8 | 2.8 |
| 6059086702 | 50.28 | 89.12 | 85-90% | 7094 | Orange | 17.2 | 77.7 | 5.1 | 67 | 14.7 | 4.3 | 0.1 | 12.2 | 1.8 |
| 6025011300 | 50.27 | 89.10 | 85-90% | 10460 | Imperial | 17.9 | 74.2 | 7.9 | 92.9 | 5.6 | 0.5 | 0.2 | 0.6 | 0.3 |
| 6037203200 | 50.27 | 89.09 | 85-90% | 4844 | Los Angeles | 18.8 | 73.7 | 7.5 | 97 | 1.1 | 0.4 | 0.1 | 0.9 | 0.5 |
| 6037104404 | 50.26 | 89.08 | 85-90% | 3236 | Los Angeles | 16.6 | 76 | 7.4 | 96.2 | 1.8 | 1 | 0.2 | 0.5 | 0.4 |
| 6047002402 | 50.24 | 89.07 | 85-90% | 7505 | Merced | 16.7 | 73.3 | 10 | 65.3 | 27.4 | 4.6 | 0.4 | 1 | 1.3 |
| 6071002704 | 50.24 | 89.05 | 85-90% | 10787 | San Bernardino | 16.5 | 78.1 | 5.4 | 45 | 20.3 | 16.4 | 0.2 | 15.1 | 3 |
| 6031001601 | 50.24 | 89.04 | 85-90% | 4516 | Kings | 20.3 | 72.5 | 7.2 | 75.2 | 14.2 | 0.6 | 7.9 | 0.8 | 1.2 |
| 6013382000 | 50.24 | 89.03 | 85-90% | 6964 | Contra Costa | 15.6 | 73.1 | 11.3 | 25.4 | 8.8 | 53.2 | 0.3 | 8.7 | 3.6 |
| 6059074405 | 50.23 | 89.02 | 85-90% | 5820 | Orange | 22.3 | 74 | 3.7 | 90.9 | 5.9 | 0.6 | 0.1 | 2.1 | 0.5 |
| 6029000200 | 50.22 | 89.00 | 85-90% | 7644 | Kern | 16.4 | 75.7 | 7.9 | 21.6 | 73.1 | 0.4 | 1.5 | 0.4 | 3 |
| 6037185310 | 50.22 | 88.99 | 85-90% | 3061 | Los Angeles | 15.1 | 75.1 | 9.8 | 90 | 3 | 0.5 | 0.3 | 5.9 | 0.4 |
| 6065030501 | 50.18 | 88.98 | 85-90% | 5095 | Riverside | 16.9 | 74.3 | 8.8 | 63.4 | 10.5 | 16 | 0.5 | 7.5 | 2.1 |
| 6037218900 | 50.16 | 88.96 | 85-90% | 5464 | Los Angeles | 15.1 | 76.9 | 8 | 50 | 5.1 | 39.2 | 0.2 | 3 | 2.5 |
| 6067004802 | 50.15 | 88.95 | 85-90% | 4485 | Sacramento | 17.1 | 73 | 9.9 | 34.6 | 21.6 | 15 | 0.7 | 24.7 | 3.4 |
| 6037542800 | 50.13 | 88.94 | 85-90% | 3123 | Los Angeles | 14 | 74.3 | 11.7 | 40.7 | 0.7 | 55.7 | 0.2 | 0.3 | 2.3 |
| 6077001600 | 50.09 | 88.93 | 85-90% | 2383 | San Joaquin | 22.6 | 70.1 | 7.3 | 73 | 17.6 | 2 | 1.1 | 3.9 | 2.3 |
| 6037207302 | 50.09 | 88.91 | 85-90% | 3791 | Los Angeles | 1.6 | 91.6 | 6.8 | 18.4 | 47.4 | 19 | 1 | 9.2 | 5 |
| 6037237402 | 50.08 | 88.90 | 85-90% | 3526 | Los Angeles | 13.3 | 75 | 11.7 | 59.8 | 0.6 | 38.5 | 0.2 | 0 | 0.9 |
| 6037501400 | 50.07 | 88.89 | 85-90% | 3978 | Los Angeles | 15.8 | 77.6 | 6.6 | 84.4 | 12.1 | 0.9 | 0.5 | 1.6 | 0.6 |
| 6037502601 | 50.05 | 88.88 | 85-90% | 7145 | Los Angeles | 13 | 75.5 | 11.5 | 91.3 | 6.2 | 0.4 | 0.1 | 1.5 | 0.5 |
| 6085500100 | 50.03 | 88.86 | 85-90% | 6339 | Santa Clara | 14.8 | 77.5 | 7.7 | 57.9 | 16.9 | 2.1 | 0.4 | 20.6 | 2.2 |
| 6071006204 | 50.03 | 88.85 | 85-90% | 4495 | San Bernardino | 23.4 | 70.9 | 5.7 | 53.5 | 16.8 | 24.4 | 0.2 | 1.8 | 3.2 |
| 6037432500 | 50.03 | 88.84 | 85-90% | 8210 | Los Angeles | 12.5 | 74.2 | 13.3 | 55.6 | 12.4 | 0.8 | 0.1 | 30.5 | 0.7 |
| 6065042511 | 50.03 | 88.83 | 85-90% | 3308 | Riverside | 18.6 | 75.5 | 5.9 | 64.4 | 14.3 | 15.8 | 0.2 | 3.2 | 2.2 |
| 6037573100 | 49.99 | 88.81 | 85-90% | 7165 | Los Angeles | 15.7 | 77.4 | 6.9 | 48.1 | 10.5 | 22.6 | 0.4 | 16 | 2.4 |
| 6077005302 | 49.99 | 88.80 | 85-90% | 6507 | San Joaquin | 16.3 | 72.9 | 10.8 | 51.4 | 36.6 | 4.6 | 0.5 | 4.1 | 2.8 |
| 6077003113 | 49.95 | 88.79 | 85-90% | 6256 | San Joaquin | 16.6 | 75.3 | 8.1 | 35.6 | 25.3 | 15.4 | 0.5 | 18.9 | 4.2 |
| 6099001604 | 49.95 | 88.78 | 85-90% | 3861 | Stanislaus | 22.5 | 71.9 | 5.6 | 73.3 | 10.3 | 4.9 | 0.2 | 8.5 | 2.8 |
| 6037238320 | 49.94 | 88.76 | 85-90% | 3787 | Los Angeles | 20.3 | 74.2 | 5.5 | 67.4 | 1.2 | 29.3 | 0.2 | 0.1 | 1.8 |
| 6071001305 | 49.94 | 88.75 | 85-90% | 5348 | San Bernardino | 20 | 74 | 6 | 83.1 | 10.8 | 2.5 | 0.4 | 2.8 | 0.5 |
| 6019005408 | 49.92 | 88.74 | 85-90% | 1276 | Fresno | 2.1 | 97.6 | 0.3 | 21.9 | 58.6 | 8.3 | 0.4 | 7.4 | 3.4 |
| 6037576401 | 49.89 | 88.72 | 85-90% | 4779 | Los Angeles | 18.2 | 77.2 | 4.6 | 67.7 | 5.9 | 10.7 | 0.2 | 13.9 | 1.7 |
| 6037407801 | 49.89 | 88.71 | 85-90% | 5074 | Los Angeles | 13.8 | 76.1 | 10.1 | 76.9 | 6.1 | 1.4 | 0.3 | 14.6 | 0.7 |
| 6037543905 | 49.87 | 88.70 | 85-90% | 4510 | Los Angeles | 16 | 76.6 | 7.4 | 76.3 | 3.4 | 9.7 | 0.2 | 9.3 | 1.2 |
| 6067004602 | 49.86 | 88.69 | 85-90% | 5067 | Sacramento | 19.4 | 72.8 | 7.8 | 54.1 | 20.5 | 10.7 | 0.6 | 10.9 | 3.2 |
| 6013368002 | 49.85 | 88.67 | 85-90% | 3404 | Contra Costa | 18.3 | 76.6 | 5.1 | 70.6 | 8.1 | 8.2 | 0.1 | 10.3 | 2.8 |
| 6019003702 | 49.83 | 88.66 | 85-90% | 4933 | Fresno | 18.8 | 70.9 | 10.3 | 52 | 23.8 | 7.3 | 0.6 | 14.4 | 1.8 |
| 6099004000 | 49.82 | 88.65 | 85-90% | 3822 | Stanislaus | 14.2 | 71.5 | 14.3 | 29.4 | 65.1 | 0.9 | 0.3 | 2.5 | 1.9 |
| 6037543501 | 49.82 | 88.64 | 85-90% | 6805 | Los Angeles | 11 | 74.3 | 14.7 | 32.3 | 9.2 | 7.9 | 0.2 | 47.5 | 2.9 |
| 6065040203 | 49.75 | 88.62 | 85-90% | 3626 | Riverside | 21.3 | 73.8 | 4.9 | 85.9 | 10 | 2.3 | 0.1 | 1.1 | 0.6 |
| 6065042512 | 49.74 | 88.61 | 85-90% | 3200 | Riverside | 20.9 | 74.8 | 4.3 | 70.6 | 9.8 | 13.7 | 0.2 | 3.3 | 2.5 |
| 6059086601 | 49.72 | 88.60 | 85-90% | 9584 | Orange | 20.3 | 73.9 | 5.8 | 82.6 | 8.2 | 2.2 | 0.1 | 5.6 | 1.3 |
| 6019007003 | 49.72 | 88.59 | 85-90% | 7750 | Fresno | 16.5 | 73.8 | 9.7 | 74.7 | 16.6 | 0.6 | 0.4 | 6.4 | 1.3 |
| 6037238310 | 49.71 | 88.57 | 85-90% | 4821 | Los Angeles | 22.2 | 74.1 | 3.7 | 70.8 | 1 | 26.7 | 0.2 | 0.2 | 1.1 |
| 6071001002 | 49.69 | 88.56 | 85-90% | 5530 | San Bernardino | 19.6 | 75.7 | 4.7 | 84.5 | 9.9 | 3.2 | 0.1 | 1.5 | 0.8 |
| 6073003502 | 49.67 | 88.55 | 85-90% | 4946 | San Diego | 19.1 | 74 | 6.9 | 84 | 2.1 | 11.8 | 0.2 | 0.6 | 1.3 |
| 6037534804 | 49.67 | 88.54 | 85-90% | 3878 | Los Angeles | 16.5 | 76.6 | 6.9 | 98.2 | 1 | 0.1 | 0.2 | 0.2 | 0.4 |
| 6037501803 | 49.67 | 88.52 | 85-90% | 4705 | Los Angeles | 17.4 | 76.9 | 5.7 | 86.5 | 9.9 | 1 | 0.5 | 1.1 | 1 |
| 6065042506 | 49.65 | 88.51 | 85-90% | 9483 | Riverside | 19.3 | 76.7 | 4 | 50 | 14 | 21.3 | 0.3 | 10.8 | 3.6 |
| 6029003112 | 49.64 | 88.50 | 85-90% | 5116 | Kern | 17.8 | 73.1 | 9.1 | 47.4 | 32.5 | 10.7 | 0.5 | 5.9 | 3 |
| 6071000207 | 49.63 | 88.49 | 85-90% | 4635 | San Bernardino | 15 | 76.8 | 8.2 | 76.2 | 13 | 3.4 | 0.3 | 6.4 | 0.8 |
| 6037540800 | 49.61 | 88.47 | 85-90% | 5042 | Los Angeles | 14.6 | 74.6 | 10.8 | 41 | 0.6 | 56.3 | 0.2 | 0.3 | 1.6 |
| 6037570100 | 49.59 | 88.46 | 85-90% | 2837 | Los Angeles | 10.9 | 77.1 | 12 | 31.4 | 24.3 | 20.1 | 0.1 | 21.1 | 2.9 |
| 6077002702 | 49.56 | 88.45 | 85-90% | 4239 | San Joaquin | 19.3 | 73.9 | 6.8 | 72.2 | 21.1 | 0.9 | 0.7 | 2.8 | 2.3 |
| 6107000201 | 49.56 | 88.43 | 85-90% | 9406 | Tulare | 20.4 | 72.4 | 7.2 | 87.3 | 3.4 | 0.1 | 0.2 | 8.3 | 0.7 |
| 6047001003 | 49.56 | 88.42 | 85-90% | 4061 | Merced | 20.3 | 72.4 | 7.3 | 49.1 | 22.6 | 11.9 | 0.2 | 12.8 | 3.4 |
| 6037208301 | 49.55 | 88.41 | 85-90% | 2201 | Los Angeles | 17.4 | 80.2 | 2.4 | 94.7 | 1.8 | 0.3 | 0.4 | 2.6 | 0.2 |
| 6019004703 | 49.54 | 88.40 | 85-90% | 4218 | Fresno | 18.2 | 71.3 | 10.5 | 60.2 | 23.7 | 7.8 | 0.7 | 5.7 | 1.8 |

| | | | | | | | | | | | | | | | |
|---|---|---|---|---|---|---|---|---|---|---|---|---|---|---|---|
| 6037531604 | 49.53 | 88.38 | 85-90% | 3580 | Los Angeles | 16.5 | 74.6 | 8.9 | 97.8 | 1.8 | 0.1 | 0.1 | 0 | 0.1 |
| 6037191710 | 49.51 | 88.37 | 85-90% | 3231 | Los Angeles | 11 | 79.1 | 9.9 | 67.1 | 19.1 | 2.5 | 0 | 9.8 | 1.5 |
| 6099000909 | 49.51 | 88.36 | 85-90% | 4402 | Stanislaus | 13.8 | 69.7 | 16.5 | 26.7 | 62.2 | 3.1 | 0.8 | 4 | 3.2 |
| 6037533803 | 49.48 | 88.35 | 85-90% | 6309 | Los Angeles | 17.7 | 74.4 | 7.9 | 89.3 | 7.3 | 0.4 | 0.2 | 2.1 | 0.7 |
| 6037576402 | 49.47 | 88.33 | 85-90% | 5181 | Los Angeles | 19.3 | 76.5 | 4.2 | 67.1 | 5.9 | 10 | 0.1 | 15.6 | 1.3 |
| 6001402200 | 49.46 | 88.32 | 85-90% | 2385 | Alameda | 13.1 | 78.2 | 8.7 | 30.2 | 16.3 | 36.4 | 0.3 | 11.4 | 5.4 |
| 6073012502 | 49.43 | 88.31 | 85-90% | 4466 | San Diego | 16.1 | 77.6 | 6.3 | 78.7 | 9.6 | 4.5 | 0.3 | 5.2 | 1.7 |
| 6037552602 | 49.42 | 88.30 | 85-90% | 4191 | Los Angeles | 13.7 | 74.9 | 11.4 | 49.9 | 8.9 | 5.4 | 0.1 | 33.7 | 1.8 |
| 6037213310 | 49.41 | 88.28 | 85-90% | 3477 | Los Angeles | 13.6 | 78.3 | 8.1 | 67.1 | 1.5 | 1.2 | 0 | 29.7 | 0.5 |
| 6065041002 | 49.41 | 88.27 | 85-90% | 3312 | Riverside | 17 | 76.9 | 6.1 | 73.1 | 19.5 | 2.8 | 0.3 | 2.6 | 1.7 |
| 6037570304 | 49.41 | 88.26 | 85-90% | 5171 | Los Angeles | 19.8 | 75.8 | 4.4 | 63.4 | 7.3 | 18.4 | 0.3 | 8.4 | 2.3 |
| 6037551101 | 49.41 | 88.25 | 85-90% | 3926 | Los Angeles | 16.8 | 77.7 | 5.5 | 76.1 | 10.7 | 5.3 | 0.2 | 6.5 | 1.2 |
| 6037432202 | 49.40 | 88.23 | 85-90% | 4252 | Los Angeles | 10.5 | 75.4 | 14.1 | 33.5 | 8.6 | 0.6 | 0.2 | 56 | 1.2 |
| 6037236202 | 49.40 | 88.22 | 85-90% | 6192 | Los Angeles | 17.9 | 75.6 | 6.5 | 47.4 | 1.1 | 48.4 | 0.2 | 0.4 | 2.4 |
| 6037404901 | 49.40 | 88.21 | 85-90% | 5658 | Los Angeles | 15.3 | 76.6 | 8.1 | 80.7 | 3.1 | 0.6 | 0.1 | 15.1 | 0.4 |
| 6037237500 | 49.38 | 88.20 | 85-90% | 2675 | Los Angeles | 17.1 | 76.4 | 6.5 | 74.2 | 1.2 | 23.3 | 0.2 | 0 | 1.1 |
| 6065031401 | 49.38 | 88.18 | 85-90% | 6702 | Riverside | 16.2 | 76.2 | 7.6 | 53.7 | 35.2 | 6.4 | 0.5 | 1.7 | 2.6 |
| 6037232600 | 49.36 | 88.17 | 85-90% | 6288 | Los Angeles | 14.6 | 77.4 | 8 | 69.5 | 0.6 | 27.7 | 0.1 | 0.1 | 2 |
| 6071001312 | 49.35 | 88.16 | 85-90% | 4645 | San Bernardino | 15 | 77.5 | 7.5 | 54.8 | 21.4 | 11.2 | 0.2 | 10.7 | 1.8 |
| 6037573004 | 49.35 | 88.14 | 85-90% | 5153 | Los Angeles | 20.2 | 75.9 | 3.9 | 61.8 | 8.3 | 21.5 | 0.3 | 6.3 | 1.9 |
| 6037402600 | 49.32 | 88.13 | 85-90% | 7453 | Los Angeles | 16.2 | 74.6 | 9.2 | 66.6 | 21.4 | 5.2 | 0.3 | 4.9 | 1.5 |
| 6037433307 | 49.31 | 88.12 | 85-90% | 3421 | Los Angeles | 17.1 | 76.6 | 6.3 | 65.4 | 3 | 0.3 | 0.1 | 30.2 | 0.9 |
| 6099002602 | 49.29 | 88.11 | 85-90% | 4561 | Stanislaus | 18.6 | 73.4 | 8 | 53.6 | 37.4 | 3.4 | 0.5 | 2.6 | 2.5 |
| 6065042515 | 49.27 | 88.09 | 85-90% | 3803 | Riverside | 23.9 | 71.1 | 5 | 70.8 | 9.3 | 15.4 | 0.6 | 2.5 | 1.5 |
| 6077001300 | 49.26 | 88.08 | 85-90% | 4903 | San Joaquin | 14.4 | 72 | 13.6 | 44.2 | 41.4 | 5.3 | 1.3 | 3.8 | 4.1 |
| 6037104704 | 49.25 | 88.07 | 85-90% | 4219 | Los Angeles | 18.1 | 75.8 | 6.1 | 76.7 | 5.5 | 13.1 | 0.2 | 3.7 | 0.7 |
| 6019003900 | 49.25 | 88.06 | 85-90% | 5804 | Fresno | 18.7 | 71.8 | 9.5 | 69.1 | 28.1 | 0.3 | 0.4 | 1.5 | 0.7 |
| 6077004404 | 49.24 | 88.04 | 85-90% | 3670 | San Joaquin | 21.2 | 73.5 | 5.3 | 69.2 | 16.9 | 0.6 | 0.2 | 11.5 | 1.7 |
| 6037224410 | 49.23 | 88.03 | 85-90% | 3140 | Los Angeles | 9 | 83.5 | 7.5 | 58.3 | 12.4 | 4.1 | 0 | 23.6 | 1.5 |
| 6001409400 | 49.22 | 88.02 | 85-90% | 4306 | Alameda | 18.9 | 75.6 | 5.5 | 67.1 | 2.3 | 23.4 | 0.1 | 5.7 | 1.4 |
| 6037128210 | 49.18 | 88.01 | 85-90% | 4822 | Los Angeles | 16.9 | 79.2 | 3.9 | 79.1 | 11.1 | 4.4 | 0.2 | 3.8 | 1.4 |
| 6037533203 | 49.17 | 87.99 | 85-90% | 1827 | Los Angeles | 19 | 75.6 | 5.4 | 93.5 | 2.5 | 0.1 | 0.2 | 2.8 | 0.8 |
| 6037191610 | 49.13 | 87.98 | 85-90% | 4502 | Los Angeles | 13.3 | 80.5 | 6.2 | 75.1 | 10.5 | 1.5 | 0 | 11.4 | 1.4 |
| 6099003603 | 49.13 | 87.97 | 85-90% | 3952 | Stanislaus | 16.1 | 72.3 | 11.6 | 41.6 | 55.4 | 0.1 | 0.3 | 0.8 | 1.8 |
| 6037405202 | 49.11 | 87.96 | 85-90% | 5227 | Los Angeles | 17.5 | 73.7 | 8.8 | 81.4 | 4.3 | 0.6 | 0 | 12.9 | 0.7 |
| 6075017902 | 49.09 | 87.94 | 85-90% | 2880 | San Francisco | 9.4 | 89.6 | 1 | 23 | 27.2 | 23.5 | 0.6 | 18.8 | 7 |
| 6047002202 | 49.08 | 87.93 | 85-90% | 9923 | Merced | 18.9 | 74.3 | 6.8 | 69.3 | 23.8 | 2.9 | 0.4 | 2.1 | 1.5 |
| 6025011900 | 49.08 | 87.92 | 85-90% | 10966 | Imperial | 17.9 | 72.4 | 9.7 | 96.6 | 2.2 | 0.1 | 0 | 0.9 | 0.2 |
| 6037433402 | 49.07 | 87.91 | 85-90% | 4776 | Los Angeles | 18.2 | 75.5 | 6.3 | 77.8 | 2.2 | 0.1 | 0 | 19.5 | 0.5 |
| 6037234901 | 49.07 | 87.89 | 85-90% | 2999 | Los Angeles | 16.3 | 74.6 | 9.1 | 45.3 | 0.7 | 51.8 | 0 | 0.4 | 1.7 |
| 6037533503 | 49.05 | 87.88 | 85-90% | 1920 | Los Angeles | 16.4 | 76.8 | 6.8 | 97.6 | 1.7 | 0.1 | 0.3 | 0.2 | 0.3 |
| 6037554403 | 49.00 | 87.87 | 85-90% | 5483 | Los Angeles | 17.3 | 76.4 | 6.3 | 49.5 | 13.6 | 22 | 0.3 | 12.2 | 2.4 |
| 6037219700 | 48.99 | 87.85 | 85-90% | 4306 | Los Angeles | 12.6 | 78.8 | 8.6 | 63.7 | 3.1 | 29.7 | 0.5 | 1.2 | 1.8 |
| 6037237710 | 48.98 | 87.84 | 85-90% | 3887 | Los Angeles | 19.4 | 76 | 4.6 | 72.1 | 1 | 25.2 | 0.3 | 0.5 | 0.9 |
| 6037209300 | 48.97 | 87.83 | 85-90% | 5021 | Los Angeles | 13 | 83.4 | 3.6 | 67.4 | 14.1 | 6.4 | 0.4 | 10 | 1.7 |
| 6071003609 | 48.94 | 87.82 | 85-90% | 4871 | San Bernardino | 18.4 | 74.5 | 7.1 | 74.4 | 12.7 | 9.2 | 0.2 | 1.6 | 1.8 |
| 6067004701 | 48.89 | 87.80 | 85-90% | 3303 | Sacramento | 19.8 | 69.6 | 10.6 | 40.2 | 15.5 | 18.1 | 0.6 | 21.6 | 4 |
| 6065030101 | 48.89 | 87.79 | 85-90% | 1226 | Riverside | 17.2 | 78.2 | 4.6 | 66.4 | 16 | 5.3 | 0.1 | 10.8 | 1.4 |
| 6037572600 | 48.88 | 87.78 | 85-90% | 5370 | Los Angeles | 13.1 | 76.2 | 10.7 | 45.2 | 4.4 | 10.9 | 0.1 | 36.9 | 2.5 |
| 6037127803 | 48.88 | 87.77 | 85-90% | 4037 | Los Angeles | 15 | 72.4 | 12.6 | 65.2 | 21.2 | 3.6 | 0.1 | 7.8 | 2.1 |
| 6037603702 | 48.86 | 87.75 | 85-90% | 5087 | Los Angeles | 12.6 | 73.8 | 13.6 | 33 | 34.6 | 5.1 | 0.2 | 23.5 | 3.5 |
| 6013376000 | 48.86 | 87.74 | 85-90% | 5962 | Contra Costa | 17.9 | 75 | 7.1 | 56 | 3.3 | 31.6 | 0.2 | 6.8 | 2.1 |
| 6037530301 | 48.85 | 87.73 | 85-90% | 2168 | Los Angeles | 13.9 | 74.8 | 11.3 | 97 | 1.8 | 0 | 0 | 1 | 0.2 |
| 6037552301 | 48.84 | 87.72 | 85-90% | 4900 | Los Angeles | 13.4 | 77.9 | 8.7 | 65 | 11.1 | 6.7 | 0.4 | 15.3 | 1.6 |
| 6037109500 | 48.84 | 87.70 | 85-90% | 4303 | Los Angeles | 15.2 | 74.9 | 9.9 | 92.6 | 3.1 | 0.9 | 0.1 | 2.4 | 0.8 |
| 6037603200 | 48.83 | 87.69 | 85-90% | 2777 | Los Angeles | 9 | 69.1 | 21.9 | 27.2 | 14.9 | 8 | 0.3 | 46.9 | 2.8 |
| 6037104701 | 48.83 | 87.68 | 85-90% | 4208 | Los Angeles | 21.2 | 73.3 | 5.5 | 95.5 | 0.9 | 2.9 | 0.1 | 0.3 | 0.5 |
| 6037232300 | 48.81 | 87.67 | 85-90% | 3926 | Los Angeles | 14.6 | 75.8 | 9.6 | 64.5 | 0.7 | 33 | 0.2 | 0.2 | 1.4 |
| 6065042800 | 48.80 | 87.65 | 85-90% | 9260 | Riverside | 22.9 | 72 | 5.1 | 77 | 8.8 | 10.6 | 0.4 | 1.6 | 1.6 |
| 6037500403 | 48.80 | 87.64 | 85-90% | 4023 | Los Angeles | 13.1 | 72.6 | 14.3 | 89.4 | 5.1 | 0.5 | 0.2 | 4.4 | 0.3 |
| 6071003505 | 48.78 | 87.63 | 85-90% | 5969 | San Bernardino | 22.7 | 74.1 | 3.2 | 73.8 | 6 | 16.9 | 0.1 | 2.1 | 1 |
| 6059087803 | 48.78 | 87.62 | 85-90% | 5658 | Orange | 18.5 | 74.9 | 6.6 | 67.6 | 8.2 | 2.5 | 0.1 | 20.4 | 1.2 |
| 6065041703 | 48.73 | 87.60 | 85-90% | 5695 | Riverside | 20.3 | 73.4 | 6.3 | 78.6 | 12.1 | 4.1 | 0.2 | 3.8 | 1.3 |
| 6031001300 | 48.73 | 87.59 | 85-90% | 3761 | Kings | 21.8 | 70.5 | 7.7 | 79.6 | 12.2 | 5.7 | 0.6 | 0.8 | 1.2 |
| 6071009300 | 48.72 | 87.58 | 85-90% | 1257 | San Bernardino | 13.8 | 72.3 | 13.9 | 40.3 | 49.7 | 3.8 | 0.6 | 2.5 | 3 |
| 6073016202 | 48.71 | 87.56 | 85-90% | 3337 | San Diego | 14.9 | 80.6 | 4.5 | 33.5 | 42.5 | 13.1 | 0.6 | 6 | 4.4 |

| | | | | | | | | | | | | | | |
|---|---|---|---|---|---|---|---|---|---|---|---|---|---|---|
| 6037224700 | 48.70 | 87.55 | 85-90% | 4856 | Los Angeles | 1.3 | 97.5 | 1.2 | 13.3 | 55 | 4.9 | 0.1 | 22.5 | 4.2 |
| 6073021900 | 48.70 | 87.54 | 85-90% | 6816 | San Diego | 4.3 | 93.2 | 2.5 | 36.8 | 37.4 | 13 | 0.8 | 8.7 | 3.3 |
| 6037208801 | 48.69 | 87.53 | 85-90% | 2995 | Los Angeles | 12.5 | 72.6 | 14.9 | 59.9 | 6.8 | 5.8 | 0.1 | 26.4 | 0.9 |
| 6037208502 | 48.68 | 87.51 | 85-90% | 3571 | Los Angeles | 13.3 | 78.2 | 8.5 | 72.1 | 5.2 | 3.3 | 0 | 18.1 | 1.3 |
| 6037433802 | 48.67 | 87.50 | 85-90% | 2780 | Los Angeles | 13 | 73.4 | 13.6 | 81.9 | 4.5 | 0.1 | 0.1 | 12.8 | 0.7 |
| 6037433602 | 48.66 | 87.49 | 85-90% | 2803 | Los Angeles | 11.7 | 72.6 | 15.7 | 36.7 | 4.2 | 0.1 | 0 | 58.3 | 0.6 |
| 6037552100 | 48.66 | 87.48 | 85-90% | 5891 | Los Angeles | 12.8 | 68.2 | 19 | 64.9 | 13.9 | 3.2 | 0.2 | 16.7 | 1.1 |
| 6019002200 | 48.64 | 87.46 | 85-90% | 3594 | Fresno | 13.4 | 78.7 | 7.9 | 51.3 | 38.8 | 4.2 | 1.2 | 2.3 | 2.3 |
| 6067000500 | 48.64 | 87.45 | 85-90% | 3159 | Sacramento | 6.2 | 87.6 | 6.2 | 26.8 | 56.5 | 5.2 | 1.4 | 5.8 | 4.3 |
| 6067009201 | 48.64 | 87.44 | 85-90% | 2293 | Sacramento | 12 | 69.2 | 18.8 | 19.8 | 51.3 | 6.9 | 1.4 | 16.5 | 4.1 |
| 6037104821 | 48.63 | 87.43 | 85-90% | 3514 | Los Angeles | 17.1 | 76.7 | 6.2 | 93 | 3.4 | 1.1 | 0.2 | 1.8 | 0.5 |
| 6029004500 | 48.63 | 87.41 | 85-90% | 3937 | Kern | 24.6 | 71.8 | 3.6 | 93.3 | 5.5 | 0.1 | 0.1 | 0.9 | 0.1 |
| 6037405002 | 48.61 | 87.40 | 85-90% | 3197 | Los Angeles | 16.1 | 77.6 | 6.3 | 88.5 | 3.6 | 0.3 | 0 | 7 | 0.6 |
| 6029003202 | 48.59 | 87.39 | 85-90% | 15579 | Kern | 19.8 | 74.8 | 5.4 | 71.1 | 17.4 | 4.2 | 0.5 | 5.1 | 1.7 |
| 6037213202 | 48.58 | 87.38 | 85-90% | 3873 | Los Angeles | 13.6 | 77.8 | 8.6 | 63.4 | 1.6 | 3.6 | 0.1 | 30.7 | 0.7 |
| 6037576200 | 48.56 | 87.36 | 85-90% | 6158 | Los Angeles | 11.8 | 80.2 | 8 | 46.5 | 24.4 | 19.8 | 0.7 | 5.7 | 2.9 |
| 6037221500 | 48.53 | 87.35 | 85-90% | 3507 | Los Angeles | 14.2 | 75.7 | 10.1 | 68.2 | 1.8 | 22.4 | 0.2 | 4 | 3.5 |
| 6037402502 | 48.52 | 87.34 | 85-90% | 7225 | Los Angeles | 18.5 | 73.5 | 8 | 80.6 | 3.8 | 3.4 | 0.3 | 10.9 | 1 |
| 6085504318 | 48.52 | 87.33 | 85-90% | 5265 | Santa Clara | 13.7 | 79 | 7.3 | 25.4 | 17.7 | 2.6 | 0.3 | 52.2 | 1.8 |
| 6037534404 | 48.52 | 87.31 | 85-90% | 3647 | Los Angeles | 18.4 | 75.9 | 5.7 | 94 | 3.1 | 1.2 | 0.3 | 0.7 | 0.6 |
| 6013310000 | 48.52 | 87.30 | 85-90% | 5641 | Contra Costa | 18.4 | 75.9 | 5.7 | 53.7 | 14.2 | 17.9 | 0.4 | 9.7 | 4.1 |
| 6037236203 | 48.48 | 87.29 | 85-90% | 3417 | Los Angeles | 16.1 | 75.1 | 8.8 | 28.2 | 0.9 | 66.7 | 0.3 | 1.2 | 2.7 |
| 6067005502 | 48.48 | 87.27 | 85-90% | 5477 | Sacramento | 17.6 | 75 | 7.4 | 48.7 | 29.2 | 10.4 | 1 | 6.7 | 4 |
| 6037191820 | 48.47 | 87.26 | 85-90% | 2647 | Los Angeles | 9 | 83.4 | 7.6 | 52.8 | 29.8 | 4.2 | 0.2 | 10.4 | 2.7 |
| 6037408140 | 48.47 | 87.25 | 85-90% | 3835 | Los Angeles | 15.4 | 77.3 | 7.3 | 90 | 3.2 | 0.7 | 0.1 | 5.4 | 0.5 |
| 6019004802 | 48.47 | 87.24 | 85-90% | 4599 | Fresno | 20.5 | 71 | 8.5 | 57.5 | 23.2 | 12.9 | 1.1 | 3.3 | 1.9 |
| 6037553901 | 48.47 | 87.22 | 85-90% | 6896 | Los Angeles | 14.1 | 78.3 | 7.6 | 78.4 | 7.9 | 7 | 0.2 | 5.5 | 1 |
| 6067002100 | 48.47 | 87.21 | 85-90% | 2377 | Sacramento | 9.9 | 80.9 | 9.2 | 24.9 | 35.4 | 4.7 | 0.8 | 28.6 | 5.7 |
| 6037552200 | 48.46 | 87.20 | 85-90% | 6835 | Los Angeles | 18.9 | 75.8 | 5.3 | 78.8 | 7.1 | 5.2 | 0.4 | 7.6 | 1 |
| 6025010400 | 48.43 | 87.19 | 85-90% | 7162 | Imperial | 20.1 | 70.9 | 9 | 94.1 | 3.6 | 1.4 | 0.2 | 0.2 | 0.5 |
| 6019003500 | 48.41 | 87.17 | 85-90% | 5674 | Fresno | 14.9 | 77.5 | 7.6 | 51.3 | 33.3 | 5.7 | 0.8 | 5.7 | 3.1 |
| 6037535501 | 48.41 | 87.16 | 85-90% | 3866 | Los Angeles | 19.7 | 74.4 | 5.9 | 96.7 | 1.9 | 0.8 | 0.1 | 0.4 | 0.1 |
| 6037231220 | 48.41 | 87.15 | 85-90% | 3824 | Los Angeles | 16.5 | 76.1 | 7.4 | 72.7 | 1.3 | 21.6 | 0.4 | 2.7 | 1.4 |
| 6037543802 | 48.39 | 87.14 | 85-90% | 7126 | Los Angeles | 11.8 | 73.2 | 15 | 33.1 | 7.2 | 8.2 | 0.1 | 48.5 | 2.9 |
| 6037237401 | 48.37 | 87.12 | 85-90% | 3616 | Los Angeles | 14.4 | 77.7 | 7.9 | 65.4 | 0.9 | 32.4 | 0 | 0.2 | 1 |
| 6071001702 | 48.35 | 87.11 | 85-90% | 4827 | San Bernardino | 14.1 | 75.1 | 10.8 | 57.1 | 30.4 | 5.5 | 0.3 | 5.2 | 1.4 |
| 6037572700 | 48.35 | 87.10 | 85-90% | 5499 | Los Angeles | 13.4 | 74.3 | 12.3 | 37.8 | 3.7 | 9.4 | 0.2 | 45.6 | 3.2 |
| 6037407302 | 48.34 | 87.09 | 85-90% | 3501 | Los Angeles | 13.5 | 75.6 | 10.9 | 89.7 | 4.3 | 0.8 | 0.2 | 4.7 | 0.3 |
| 6037121221 | 48.34 | 87.07 | 85-90% | 2365 | Los Angeles | 13.4 | 77.7 | 8.9 | 83.3 | 7.7 | 1.2 | 0.2 | 6.3 | 1.4 |
| 6107000502 | 48.32 | 87.06 | 85-90% | 3405 | Tulare | 19.9 | 71.4 | 8.7 | 87.1 | 10.3 | 0.1 | 0.2 | 1.6 | 0.7 |
| 6071001706 | 48.32 | 87.05 | 85-90% | 6231 | San Bernardino | 17.8 | 77.3 | 4.9 | 74.8 | 11.7 | 7.2 | 0.1 | 4.3 | 1.9 |
| 6107000401 | 48.30 | 87.03 | 85-90% | 5193 | Tulare | 19.5 | 73.6 | 6.9 | 81.3 | 13.7 | 0.2 | 0.3 | 3.4 | 1 |
| 6065040503 | 48.29 | 87.02 | 85-90% | 3876 | Riverside | 9.5 | 65.7 | 24.8 | 51.1 | 33.2 | 10.5 | 0.3 | 3.2 | 1.8 |
| 6071003102 | 48.29 | 87.01 | 85-90% | 5466 | San Bernardino | 22.2 | 74.1 | 3.7 | 86.8 | 7.3 | 3.4 | 0.2 | 2 | 0.4 |
| 6013311000 | 48.28 | 87.00 | 85-90% | 5001 | Contra Costa | 17.3 | 75.4 | 7.3 | 52.4 | 11.4 | 18.4 | 0.7 | 13.7 | 3.5 |
| 6047001901 | 48.26 | 86.98 | 85-90% | 5739 | Merced | 18.4 | 72.8 | 8.8 | 88.7 | 9.3 | 0.4 | 0.1 | 1.3 | 0.3 |
| 6047001700 | 48.25 | 86.97 | 85-90% | 6335 | Merced | 21.1 | 70.3 | 8.6 | 52.7 | 30.3 | 4.5 | 0.5 | 9.4 | 2.4 |
| 6075023400 | 48.25 | 86.96 | 85-90% | 3660 | San Francisco | 16.2 | 74.2 | 9.6 | 33.5 | 3.5 | 33 | 0.2 | 25.2 | 4.8 |
| 6065041408 | 48.21 | 86.95 | 85-90% | 4017 | Riverside | 18.1 | 76.8 | 5.1 | 51.5 | 27.8 | 10.8 | 0.5 | 5.3 | 4.2 |
| 6059011602 | 48.19 | 86.93 | 85-90% | 5237 | Orange | 15.5 | 72.7 | 11.8 | 78.9 | 14.8 | 1.7 | 0.1 | 3.8 | 0.7 |
| 6019008200 | 48.18 | 86.92 | 85-90% | 6978 | Fresno | 22.1 | 72 | 5.9 | 91.3 | 7.1 | 0.1 | 0.2 | 0.9 | 0.4 |
| 6071004301 | 48.17 | 86.91 | 85-90% | 4677 | San Bernardino | 17 | 73.3 | 9.7 | 68 | 6.5 | 21.9 | 0.2 | 2.3 | 1.2 |
| 6037221302 | 48.15 | 86.90 | 85-90% | 4403 | Los Angeles | 14.3 | 78.8 | 6.9 | 67 | 4.8 | 18.4 | 0.2 | 8.1 | 1.6 |
| 6095250701 | 48.15 | 86.88 | 85-90% | 2962 | Solano | 14.4 | 73.8 | 11.8 | 35.9 | 19.3 | 30.3 | 0.7 | 10.4 | 3.4 |
| 6037120400 | 48.14 | 86.87 | 85-90% | 6272 | Los Angeles | 13 | 76.3 | 10.7 | 56.7 | 17.7 | 2.8 | 0.2 | 20.6 | 2 |
| 6067002000 | 48.12 | 86.86 | 85-90% | 2376 | Sacramento | 5.5 | 81.2 | 13.3 | 16.8 | 39.1 | 3.4 | 1.2 | 34.8 | 4.7 |
| 6029004301 | 48.12 | 86.85 | 85-90% | 7416 | Kern | 22.2 | 72.9 | 4.9 | 84.7 | 11.4 | 2.3 | 0.2 | 0.7 | 0.7 |
| 6081611900 | 48.11 | 86.83 | 85-90% | 10325 | San Mateo | 17.1 | 75.8 | 7.1 | 56.9 | 6.8 | 19.8 | 0.1 | 13.3 | 3.1 |
| 6037302201 | 48.11 | 86.82 | 85-90% | 3856 | Los Angeles | 7.2 | 69.7 | 23.1 | 14.5 | 68.8 | 1 | 0 | 12 | 3.7 |
| 6037408202 | 48.10 | 86.81 | 85-90% | 2037 | Los Angeles | 15.6 | 76.3 | 8.1 | 86.3 | 5.4 | 0.2 | 0.2 | 7.1 | 0.7 |
| 6037234700 | 48.10 | 86.80 | 85-90% | 3888 | Los Angeles | 12.9 | 74.6 | 12.5 | 38.3 | 1.1 | 57.6 | 0.4 | 0.6 | 2 |
| 6037533502 | 48.10 | 86.78 | 85-90% | 2143 | Los Angeles | 16.5 | 78 | 5.5 | 98.4 | 1.1 | 0.2 | 0.1 | 0.2 | 0 |
| 6025011100 | 48.09 | 86.77 | 85-90% | 3685 | Imperial | 15.8 | 72.6 | 11.6 | 66.7 | 27.1 | 2.3 | 0.1 | 1.6 | 2.1 |
| 6037530302 | 48.05 | 86.76 | 85-90% | 6556 | Los Angeles | 14.8 | 74.5 | 10.7 | 96.3 | 2.1 | 0.1 | 0.1 | 1.1 | 0.3 |
| 6037191410 | 48.04 | 86.74 | 85-90% | 5092 | Los Angeles | 12.5 | 77.1 | 10.4 | 73.1 | 6 | 3.6 | 0.1 | 15.8 | 1.4 |
| 6037121600 | 48.03 | 86.73 | 85-90% | 3005 | Los Angeles | 10 | 75.3 | 14.7 | 36.1 | 36.8 | 1.8 | 0.1 | 22.4 | 2.8 |

| | | | | | | | | | | | | | | | |
|---|---|---|---|---|---|---|---|---|---|---|---|---|---|---|---|
| 6071006302 | 48.01 | 86.72 | 85-90% | 8815 | San Bernardino | 20 | 73.2 | 6.8 | 68.4 | 15.7 | 9.7 | 0.4 | 4 | 1.8 |
| 6073004700 | 47.99 | 86.71 | 85-90% | 1858 | San Diego | 11.9 | 78.8 | 9.3 | 70.5 | 19.5 | 6.2 | 0.4 | 1.3 | 2.2 |
| 6037603400 | 47.98 | 86.69 | 85-90% | 4367 | Los Angeles | 13.1 | 73 | 13.9 | 42.9 | 12.6 | 13.7 | 0.1 | 27.8 | 2.9 |
| 6001408900 | 47.97 | 86.68 | 85-90% | 3414 | Alameda | 18.1 | 72.8 | 9.1 | 59.4 | 2 | 31.9 | 0.4 | 4.2 | 2.1 |
| 6037504101 | 47.96 | 86.67 | 85-90% | 5126 | Los Angeles | 12.2 | 74.4 | 13.4 | 67.9 | 19.8 | 1.5 | 0.3 | 9.3 | 1.2 |
| 6025012100 | 47.95 | 86.66 | 85-90% | 6937 | Imperial | 14.3 | 68.6 | 17.1 | 96.6 | 2.1 | 0.2 | 0.2 | 0.7 | 0.2 |
| 6037551900 | 47.95 | 86.64 | 85-90% | 5344 | Los Angeles | 13.1 | 75.8 | 11.1 | 65.8 | 16.2 | 6.6 | 0.3 | 10.1 | 1.1 |
| 6059110606 | 47.90 | 86.63 | 85-90% | 4590 | Orange | 17.8 | 77.2 | 5 | 59 | 10.7 | 4.3 | 0.1 | 24.2 | 1.8 |
| 6019007500 | 47.90 | 86.62 | 85-90% | 5287 | Fresno | 16.9 | 73.1 | 10 | 62.9 | 27.6 | 0.3 | 0.2 | 7.6 | 1.4 |
| 6037213401 | 47.87 | 86.61 | 85-90% | 4951 | Los Angeles | 14 | 80 | 6 | 76.7 | 1.6 | 1 | 0.1 | 19.9 | 0.7 |
| 6037603900 | 47.83 | 86.59 | 85-90% | 7527 | Los Angeles | 14.6 | 76.8 | 8.6 | 61.9 | 17.4 | 8 | 0.4 | 9.9 | 2.4 |
| 6037238000 | 47.82 | 86.58 | 85-90% | 5864 | Los Angeles | 12.8 | 72.1 | 15.1 | 19.9 | 0.7 | 76.7 | 0.2 | 0.4 | 2 |
| 6037532200 | 47.82 | 86.57 | 85-90% | 6836 | Los Angeles | 18.4 | 74.5 | 7.1 | 92.7 | 3.8 | 1.7 | 0.1 | 1.4 | 0.2 |
| 6115040400 | 47.81 | 86.56 | 85-90% | 5538 | Yuba | 19.6 | 72.7 | 7.7 | 34.7 | 45.3 | 2.6 | 2.6 | 10.3 | 4.5 |
| 6019006604 | 47.79 | 86.54 | 85-90% | 7959 | Fresno | 19.6 | 74.5 | 5.9 | 88.5 | 8.3 | 0.2 | 0.1 | 2.3 | 0.7 |
| 6037241110 | 47.77 | 86.53 | 85-90% | 3074 | Los Angeles | 19.5 | 75.4 | 5.1 | 70.1 | 0.6 | 28.2 | 0 | 0.1 | 1 |
| 6037195804 | 47.77 | 86.52 | 85-90% | 2643 | Los Angeles | 9.1 | 79.4 | 11.5 | 53.5 | 24 | 2.3 | 0.1 | 17.9 | 2.3 |
| 6077003313 | 47.76 | 86.51 | 85-90% | 2926 | San Joaquin | 20.5 | 69.9 | 9.6 | 41 | 12.4 | 17.2 | 0.9 | 25.2 | 3.3 |
| 6029000101 | 47.74 | 86.49 | 85-90% | 12240 | Kern | 17.8 | 74.6 | 7.6 | 19.1 | 74.2 | 0.8 | 1 | 2.7 | 2.2 |
| 6059074300 | 47.71 | 86.48 | 85-90% | 4392 | Orange | 18.3 | 76 | 5.7 | 96 | 2.6 | 0.1 | 0.1 | 1 | 0.2 |
| 6037221304 | 47.69 | 86.47 | 85-90% | 3319 | Los Angeles | 14.5 | 76.6 | 8.9 | 54.1 | 3.2 | 22.7 | 0.2 | 18.5 | 1.3 |
| 6037532101 | 47.66 | 86.45 | 85-90% | 6663 | Los Angeles | 17.7 | 76.2 | 6.1 | 93.5 | 3.5 | 0.4 | 0.4 | 2 | 0.2 |
| 6037237600 | 47.66 | 86.44 | 85-90% | 4259 | Los Angeles | 18.7 | 73.1 | 8.2 | 75.5 | 0.8 | 21.9 | 0.1 | 0.4 | 1.2 |
| 6039000800 | 47.65 | 86.43 | 85-90% | 7027 | Madera | 20.7 | 71.7 | 7.6 | 81.2 | 14.1 | 2.2 | 0.7 | 0.8 | 1 |
| 6059089004 | 47.63 | 86.42 | 85-90% | 7011 | Orange | 16.3 | 73.7 | 10 | 62.3 | 7.2 | 0.7 | 0.1 | 28.8 | 0.9 |
| 6073011602 | 47.62 | 86.40 | 85-90% | 3228 | San Diego | 14.7 | 74.9 | 10.4 | 78.4 | 8.4 | 3.8 | 0.2 | 8 | 1.1 |
| 6065042513 | 47.62 | 86.39 | 85-90% | 3379 | Riverside | 14.9 | 77.5 | 7.6 | 63.5 | 17.6 | 10.2 | 0.1 | 6.2 | 2.4 |
| 6037601302 | 47.60 | 86.38 | 85-90% | 6856 | Los Angeles | 14.8 | 79.4 | 5.8 | 25.8 | 3.6 | 65.7 | 0.2 | 1.4 | 3.3 |
| 6071006700 | 47.60 | 86.37 | 85-90% | 4486 | San Bernardino | 17.9 | 74.4 | 7.7 | 88.5 | 7.7 | 1.8 | 0.1 | 0.8 | 1.1 |
| 6037294421 | 47.60 | 86.35 | 85-90% | 2950 | Los Angeles | 16.6 | 75.1 | 8.3 | 70.9 | 8.7 | 6.6 | 0.1 | 12 | 1.6 |
| 6077002504 | 47.59 | 86.34 | 85-90% | 3982 | San Joaquin | 17.7 | 75.6 | 6.7 | 49.1 | 7.4 | 12.5 | 0.1 | 27.8 | 3.2 |
| 6037104610 | 47.59 | 86.33 | 85-90% | 3672 | Los Angeles | 18.5 | 74.4 | 7.1 | 97.3 | 1.4 | 0.4 | 0.2 | 0.5 | 0.3 |
| 6037481500 | 47.58 | 86.32 | 85-90% | 4361 | Los Angeles | 8.6 | 68.6 | 22.8 | 18.8 | 8.6 | 0.4 | 0 | 70.9 | 1.2 |
| 6037190401 | 47.57 | 86.30 | 85-90% | 3135 | Los Angeles | 5.1 | 83.4 | 11.5 | 21.6 | 59.4 | 4.3 | 0.4 | 10.8 | 3.6 |
| 6037218702 | 47.57 | 86.29 | 85-90% | 2176 | Los Angeles | 15 | 76.2 | 8.8 | 53.8 | 3.4 | 37.7 | 0.1 | 2.7 | 2.3 |
| 6037406702 | 47.56 | 86.28 | 85-90% | 5823 | Los Angeles | 13.5 | 75.5 | 11 | 61.2 | 13.7 | 4 | 0.3 | 19.1 | 1.7 |
| 6019007300 | 47.54 | 86.27 | 85-90% | 4869 | Fresno | 16.1 | 72.2 | 11.7 | 55.9 | 30 | 0.6 | 0.4 | 11.1 | 2.1 |
| 6001401800 | 47.54 | 86.25 | 85-90% | 1703 | Alameda | 15.3 | 77.9 | 6.8 | 19.3 | 15 | 57.4 | 0.3 | 3.3 | 4.6 |
| 6037208903 | 47.53 | 86.24 | 85-90% | 4019 | Los Angeles | 14.4 | 78.3 | 7.3 | 82.8 | 5.3 | 6.9 | 0.1 | 3.6 | 1.4 |
| 6029003121 | 47.52 | 86.23 | 85-90% | 8264 | Kern | 20.3 | 72.6 | 7.1 | 65.5 | 17.1 | 11.4 | 0.4 | 3.5 | 2.1 |
| 6019007002 | 47.50 | 86.22 | 85-90% | 4514 | Fresno | 16.9 | 73.3 | 9.8 | 80.7 | 16.3 | 0.4 | 0.8 | 0.9 | 0.9 |
| 6037294510 | 47.49 | 86.20 | 85-90% | 4214 | Los Angeles | 17.8 | 76.5 | 5.7 | 92.9 | 3.8 | 1.1 | 0.1 | 1.5 | 0.5 |
| 6037222600 | 47.48 | 86.19 | 85-90% | 5631 | Los Angeles | 12.5 | 81.2 | 6.3 | 54.5 | 7.7 | 24.1 | 0.1 | 10.6 | 3 |
| 6037127804 | 47.48 | 86.18 | 85-90% | 3933 | Los Angeles | 13.2 | 79.3 | 7.5 | 50.9 | 28 | 6.8 | 0.3 | 11.5 | 2.4 |
| 6037270300 | 47.47 | 86.16 | 85-90% | 2364 | Los Angeles | 11.3 | 75.5 | 13.2 | 34.9 | 14.9 | 38.2 | 0.3 | 7.4 | 4.1 |
| 6031000800 | 47.47 | 86.15 | 85-90% | 4858 | Kings | 17.4 | 70.5 | 12.1 | 54.1 | 35.9 | 4.9 | 0.6 | 2.3 | 2.2 |
| 6037128601 | 47.46 | 86.14 | 85-90% | 4288 | Los Angeles | 12.9 | 79.4 | 7.7 | 48.6 | 40.4 | 4.5 | 0.2 | 3.6 | 2.8 |
| 6073003602 | 47.45 | 86.13 | 85-90% | 3079 | San Diego | 18.3 | 75.7 | 6 | 84.4 | 3.1 | 8.8 | 0.2 | 2.7 | 0.8 |
| 6065040402 | 47.45 | 86.11 | 85-90% | 4224 | Riverside | 16.2 | 74.8 | 9 | 64.8 | 31.5 | 1 | 0.2 | 1 | 1.5 |
| 6071003200 | 47.45 | 86.10 | 85-90% | 8005 | San Bernardino | 17.5 | 74.4 | 8.1 | 73.8 | 20.3 | 3.5 | 0.2 | 1.2 | 1 |
| 6071002502 | 47.44 | 86.09 | 85-90% | 8051 | San Bernardino | 17.7 | 76 | 6.3 | 85.8 | 9 | 2.7 | 0.3 | 1.8 | 0.5 |
| 6077003405 | 47.44 | 86.08 | 85-90% | 4214 | San Joaquin | 18.2 | 73 | 8.8 | 31 | 10.5 | 7.9 | 0.1 | 47.2 | 3.2 |
| 6037500402 | 47.44 | 86.06 | 85-90% | 4910 | Los Angeles | 15.8 | 75.5 | 8.7 | 95.5 | 2.4 | 0.2 | 0.1 | 1.4 | 0.5 |
| 6029005003 | 47.43 | 86.05 | 85-90% | 3543 | Kern | 21.2 | 70.2 | 8.6 | 80.6 | 6.7 | 0.8 | 0.3 | 10.5 | 1.1 |
| 6037542700 | 47.43 | 86.04 | 85-90% | 5720 | Los Angeles | 17.7 | 76.2 | 6.1 | 72.2 | 0.7 | 26 | 0.1 | 0.4 | 0.5 |
| 6037127910 | 47.43 | 86.03 | 85-90% | 4769 | Los Angeles | 14.7 | 77 | 8.3 | 67.1 | 20.2 | 5 | 0 | 5.3 | 2.4 |
| 6077004502 | 47.42 | 86.01 | 85-90% | 4450 | San Joaquin | 24.2 | 71.1 | 4.7 | 79.5 | 13.4 | 0.3 | 0.6 | 4.9 | 1.4 |
| 6037203720 | 47.40 | 86.00 | 85-90% | 4001 | Los Angeles | 18.1 | 74.3 | 7.6 | 96.7 | 1 | 0.7 | 0 | 1 | 0.6 |
| 6107003300 | 47.40 | 85.99 | 85-90% | 7837 | Tulare | 19.4 | 71.2 | 9.4 | 66 | 30.9 | 0.3 | 0.6 | 1.1 | 1.2 |
| 6031001003 | 47.40 | 85.98 | 85-90% | 5699 | Kings | 19.1 | 74.8 | 6.1 | 66.2 | 22.7 | 4.8 | 0.6 | 3.1 | 2.6 |
| 6037221601 | 47.38 | 85.96 | 85-90% | 3403 | Los Angeles | 14.1 | 78.7 | 7.2 | 81.3 | 3.4 | 9.8 | 0.3 | 3.9 | 1.3 |
| 6085512603 | 47.37 | 85.95 | 85-90% | 3954 | Santa Clara | 20.1 | 75.1 | 4.8 | 86.1 | 9.6 | 0.9 | 0.4 | 1.9 | 1 |
| 6019002904 | 47.37 | 85.94 | 85-90% | 2897 | Fresno | 16.2 | 72.9 | 10.9 | 59.2 | 16.2 | 4.3 | 0.4 | 19.1 | 0.8 |
| 6037221820 | 47.37 | 85.93 | 85-90% | 3095 | Los Angeles | 2.9 | 93.2 | 3.9 | 17.2 | 31 | 6.7 | 0 | 40.5 | 4.6 |
| 6037530400 | 47.36 | 85.91 | 85-90% | 3683 | Los Angeles | 13.8 | 69.6 | 16.6 | 76.6 | 2.9 | 1.2 | 0.4 | 18.2 | 0.7 |
| 6037602403 | 47.36 | 85.90 | 85-90% | 5230 | Los Angeles | 15.7 | 77.4 | 6.9 | 59.7 | 8.5 | 20.8 | 0.2 | 8.6 | 2.1 |

| | | | | | | | | | | | | | | | |
|---|---|---|---|---|---|---|---|---|---|---|---|---|---|---|---|
| 6099003300 | 47.34 | 85.89 | 85-90% | 5077 | Stanislaus | 16.1 | 74.4 | 9.5 | 59.9 | 32.9 | 2.3 | 0.5 | 2.4 | 2 |
| 6037119001 | 47.33 | 85.87 | 85-90% | 4038 | Los Angeles | 12.2 | 78.2 | 9.6 | 70.5 | 9.7 | 0.8 | 0.2 | 16.9 | 2 |
| 6037213320 | 47.33 | 85.86 | 85-90% | 2481 | Los Angeles | 9.6 | 74.7 | 15.7 | 64 | 1.9 | 3.1 | 0 | 29.8 | 1.1 |
| 6071007109 | 47.32 | 85.85 | 85-90% | 6064 | San Bernardino | 16 | 74.7 | 9.3 | 38.6 | 33.3 | 17.9 | 0.4 | 6.1 | 3.7 |
| 6037297120 | 47.32 | 85.84 | 85-90% | 3315 | Los Angeles | 16.3 | 75.7 | 8 | 69.5 | 18.4 | 5.5 | 0.4 | 4.5 | 1.8 |
| 6107003100 | 47.32 | 85.82 | 85-90% | 3591 | Tulare | 19.9 | 72.2 | 7.9 | 64.1 | 32.4 | 1.3 | 0.8 | 0.3 | 1.2 |
| 6001406100 | 47.31 | 85.81 | 85-90% | 4381 | Alameda | 14.5 | 78.6 | 6.9 | 57.7 | 16.3 | 10.5 | 0.7 | 12.6 | 2.2 |
| 6037231300 | 47.29 | 85.80 | 85-90% | 5348 | Los Angeles | 15.7 | 76.8 | 7.5 | 64 | 1.6 | 30.2 | 0.3 | 1.2 | 2.6 |
| 6071004001 | 47.26 | 85.79 | 85-90% | 4763 | San Bernardino | 17.3 | 75.9 | 6.8 | 82.5 | 12.7 | 2.5 | 0.5 | 1.2 | 0.7 |
| 6099000302 | 47.26 | 85.77 | 85-90% | 2641 | Stanislaus | 16.6 | 70.6 | 12.8 | 47.1 | 46.3 | 2.1 | 0.7 | 1.7 | 2 |
| 6037190700 | 47.23 | 85.76 | 85-90% | 3379 | Los Angeles | 4.1 | 83.9 | 12 | 34.3 | 47.1 | 9 | 0.4 | 6.5 | 2.8 |
| 6037576901 | 47.22 | 85.75 | 85-90% | 6092 | Los Angeles | 17.1 | 78.7 | 4.2 | 55.9 | 11 | 12.7 | 0.2 | 17.5 | 2.7 |
| 6037123901 | 47.20 | 85.74 | 85-90% | 4500 | Los Angeles | 12.6 | 78.9 | 8.5 | 54.7 | 33.3 | 4.2 | 0.2 | 5.4 | 2.1 |
| 6037241201 | 47.18 | 85.72 | 85-90% | 2898 | Los Angeles | 16.6 | 74.8 | 8.6 | 51.8 | 0.7 | 46.3 | 0.1 | 0.2 | 0.9 |
| 6075023102 | 47.15 | 85.71 | 85-90% | 3478 | San Francisco | 15.5 | 74.9 | 9.6 | 16.2 | 4.9 | 61 | 0.4 | 13.7 | 3.8 |
| 6071002301 | 47.14 | 85.70 | 85-90% | 9721 | San Bernardino | 17.2 | 77 | 5.8 | 72.9 | 11.3 | 8.5 | 0.3 | 5.8 | 1.2 |
| 6059087403 | 47.12 | 85.69 | 85-90% | 3186 | Orange | 18.4 | 77.6 | 4 | 86.7 | 7.2 | 1.2 | 0.2 | 4 | 0.7 |
| 6037602505 | 47.12 | 85.67 | 85-90% | 4072 | Los Angeles | 19.2 | 76.9 | 3.9 | 52.8 | 5.2 | 35.4 | 0.2 | 4.5 | 1.9 |
| 6065940400 | 47.10 | 85.66 | 85-90% | 6504 | Riverside | 20.4 | 75.7 | 3.9 | 96.6 | 2.3 | 0.4 | 0.3 | 0.1 | 0.3 |
| 6037404402 | 47.09 | 85.65 | 85-90% | 5107 | Los Angeles | 15.3 | 76.4 | 8.3 | 78.9 | 10.9 | 0.7 | 0.4 | 8.4 | 0.7 |
| 6085503601 | 47.09 | 85.64 | 85-90% | 2992 | Santa Clara | 16.2 | 74.3 | 9.5 | 54.4 | 26.3 | 1.4 | 0.2 | 15.3 | 2.4 |
| 6037530004 | 47.08 | 85.62 | 85-90% | 3695 | Los Angeles | 11.7 | 72.9 | 15.4 | 73.2 | 14.7 | 0.5 | 0.2 | 10.6 | 0.8 |
| 6029000300 | 47.07 | 85.61 | 85-90% | 4217 | Kern | 16.8 | 71.2 | 12 | 21.1 | 73.5 | 0.5 | 1.8 | 0.7 | 2.5 |
| 6071002206 | 47.07 | 85.60 | 85-90% | 6656 | San Bernardino | 14.1 | 80.6 | 5.3 | 55.3 | 26.3 | 7.9 | 0.3 | 7.6 | 2.6 |
| 6025011600 | 47.06 | 85.58 | 85-90% | 6310 | Imperial | 15.9 | 73.5 | 10.6 | 84.9 | 11.8 | 1.6 | 0.2 | 0.7 | 0.9 |
| 6037551102 | 47.06 | 85.57 | 85-90% | 5503 | Los Angeles | 18.6 | 77.5 | 3.9 | 79 | 8.3 | 7.4 | 0.3 | 3.8 | 1.1 |
| 6029001300 | 47.05 | 85.56 | 85-90% | 7559 | Kern | 23.7 | 71.6 | 4.7 | 83.1 | 8 | 6.5 | 1.3 | 0.2 | 0.9 |
| 6059074403 | 47.04 | 85.55 | 85-90% | 5688 | Orange | 24.7 | 72.6 | 2.7 | 94.6 | 2.3 | 0.2 | 0.1 | 2.4 | 0.4 |
| 6037218800 | 47.02 | 85.53 | 85-90% | 2658 | Los Angeles | 14 | 77.2 | 8.8 | 62.3 | 2.7 | 25.1 | 0.2 | 8.2 | 1.5 |
| 6037430101 | 46.99 | 85.52 | 85-90% | 4887 | Los Angeles | 10.4 | 66.4 | 23.2 | 50.1 | 24.5 | 8.5 | 0.5 | 13.9 | 2.5 |
| 6071003506 | 46.99 | 85.51 | 85-90% | 4802 | San Bernardino | 18.8 | 75 | 6.2 | 67.5 | 8.9 | 19.6 | 0.2 | 2.1 | 1.7 |
| 6037542501 | 46.95 | 85.50 | 85-90% | 4307 | Los Angeles | 18.3 | 75.8 | 5.9 | 40.7 | 0.7 | 51.6 | 0.1 | 5.6 | 1.3 |
| 6007001300 | 46.95 | 85.48 | 85-90% | 4169 | Butte | 14.6 | 78.9 | 6.5 | 30.8 | 51.5 | 2.2 | 2.8 | 9.1 | 3.7 |
| 6077005114 | 46.95 | 85.47 | 85-90% | 7721 | San Joaquin | 17.1 | 77.8 | 5.1 | 34.4 | 40.9 | 6.3 | 0.2 | 14.3 | 4 |
| 6037216900 | 46.94 | 85.46 | 85-90% | 5060 | Los Angeles | 8.5 | 76 | 15.5 | 19.7 | 35 | 34.2 | 0.3 | 6.1 | 4.7 |
| 6039001000 | 46.94 | 85.45 | 85-90% | 5319 | Madera | 13 | 72.2 | 14.8 | 53.8 | 41 | 1 | 0.5 | 2.6 | 1.3 |
| 6099003904 | 46.92 | 85.43 | 85-90% | 4374 | Stanislaus | 14.5 | 71.4 | 14.1 | 40.2 | 54.5 | 1 | 0.4 | 1.7 | 2.1 |
| 6037535605 | 46.92 | 85.42 | 85-90% | 4153 | Los Angeles | 17.8 | 74.6 | 7.6 | 96.2 | 1.8 | 0.6 | 0 | 1 | 0.4 |
| 6037404401 | 46.92 | 85.41 | 85-90% | 3979 | Los Angeles | 17.4 | 75 | 7.6 | 85.3 | 9.7 | 0.7 | 0.3 | 3.4 | 0.6 |
| 6001401400 | 46.92 | 85.40 | 85-90% | 4314 | Alameda | 12.5 | 79.6 | 7.9 | 21.1 | 15.2 | 48.4 | 0.6 | 10 | 4.6 |
| 6037231800 | 46.92 | 85.38 | 85-90% | 5303 | Los Angeles | 18.4 | 77.7 | 3.9 | 86.9 | 1.1 | 11.1 | 0.1 | 0.1 | 0.7 |
| 6071005200 | 46.92 | 85.37 | 85-90% | 4141 | San Bernardino | 16.3 | 74.3 | 9.4 | 54.9 | 29.7 | 9.4 | 0.6 | 2.2 | 3 |
| 6029004000 | 46.91 | 85.36 | 85-90% | 7704 | Kern | 18.8 | 76.5 | 4.7 | 83 | 13.5 | 1.4 | 0.5 | 1 | 0.6 |
| 6071006402 | 46.90 | 85.34 | 85-90% | 4951 | San Bernardino | 21.1 | 74 | 4.9 | 64.4 | 10.2 | 17.7 | 0.5 | 5.3 | 1.8 |
| 6071003302 | 46.89 | 85.33 | 85-90% | 6037 | San Bernardino | 18.6 | 73.5 | 7.9 | 73.2 | 19.2 | 5.1 | 0.4 | 0.8 | 1.3 |
| 6037550300 | 46.87 | 85.32 | 85-90% | 7727 | Los Angeles | 13.6 | 76.7 | 9.7 | 70.4 | 16 | 3.4 | 0.3 | 8.6 | 1.3 |
| 6037980010 | 46.87 | 85.31 | 85-90% | 164 | Los Angeles | 5.5 | 71.9 | 22.6 | 14 | 28.7 | 0.6 | 0 | 56.1 | 0.6 |
| 6065031704 | 46.87 | 85.29 | 85-90% | 5284 | Riverside | 13.4 | 74.8 | 11.8 | 52.5 | 34.4 | 5.8 | 0.5 | 5.4 | 1.4 |
| 6019005608 | 46.86 | 85.28 | 85-90% | 3064 | Fresno | 12.2 | 63.6 | 24.2 | 25.8 | 63.3 | 2.1 | 1.5 | 3.9 | 3.4 |
| 6019003302 | 46.86 | 85.27 | 85-90% | 4749 | Fresno | 18 | 73.3 | 8.7 | 67.6 | 20 | 4.8 | 0.5 | 5.2 | 2 |
| 6037190902 | 46.85 | 85.26 | 85-90% | 3960 | Los Angeles | 10.1 | 81.3 | 8.6 | 60.7 | 27.8 | 3.1 | 0 | 6.5 | 1.8 |
| 6037209401 | 46.85 | 85.24 | 85-90% | 3914 | Los Angeles | 14.2 | 72.9 | 12.9 | 73.1 | 4.8 | 4.5 | 0.2 | 16.3 | 1.1 |
| 6077005126 | 46.85 | 85.23 | 85-90% | 4131 | San Joaquin | 16.3 | 71.3 | 12.4 | 40.7 | 45.8 | 3.4 | 0.8 | 5.4 | 3.9 |
| 6029004200 | 46.83 | 85.22 | 85-90% | 1320 | Kern | 19 | 71.3 | 9.7 | 67 | 30 | 0.4 | 1.1 | 0.3 | 1.2 |
| 6073003501 | 46.82 | 85.21 | 85-90% | 4255 | San Diego | 19.2 | 75.3 | 5.5 | 84.3 | 2.6 | 10.2 | 0.2 | 1.6 | 1.1 |
| 6037127711 | 46.80 | 85.19 | 85-90% | 3356 | Los Angeles | 14.1 | 77.8 | 8.1 | 55.2 | 31.6 | 4.4 | 0.3 | 6.4 | 2.1 |
| 6073015901 | 46.78 | 85.18 | 85-90% | 3450 | San Diego | 18.3 | 76.8 | 4.9 | 48.8 | 31.2 | 9.9 | 0.2 | 4.6 | 5.4 |
| 6037231210 | 46.77 | 85.17 | 85-90% | 3688 | Los Angeles | 16 | 78.5 | 5.5 | 71.2 | 2.1 | 23.8 | 0.1 | 1.6 | 1.2 |
| 6047001501 | 46.76 | 85.16 | 85-90% | 2693 | Merced | 17.7 | 74.8 | 7.5 | 58.3 | 18.8 | 3.2 | 0.5 | 16.9 | 2.3 |
| 6065043401 | 46.75 | 85.14 | 85-90% | 5791 | Riverside | 17.9 | 73.4 | 8.7 | 52.9 | 35.8 | 6.8 | 0.8 | 1 | 2.8 |
| 6037132002 | 46.74 | 85.13 | 85-90% | 3299 | Los Angeles | 12 | 76.5 | 11.5 | 39.6 | 47.5 | 2.6 | 0.3 | 7.7 | 2.4 |
| 6037234300 | 46.73 | 85.12 | 85-90% | 4098 | Los Angeles | 9.6 | 75.2 | 15.2 | 6.2 | 1 | 89 | 0.2 | 0.9 | 2.7 |
| 6065042405 | 46.69 | 85.11 | 85-90% | 4997 | Riverside | 22.6 | 74.1 | 3.3 | 48.7 | 14.5 | 30.8 | 0.5 | 2.7 | 2.7 |
| 6085503122 | 46.69 | 85.09 | 85-90% | 3449 | Santa Clara | 14.4 | 77.8 | 7.8 | 31.1 | 14.4 | 6 | 0.2 | 46.4 | 1.9 |
| 6037407102 | 46.69 | 85.08 | 85-90% | 5445 | Los Angeles | 14.3 | 76.7 | 9 | 86.8 | 4 | 0.4 | 0.2 | 7.9 | 0.6 |
| 6071006203 | 46.69 | 85.07 | 85-90% | 4771 | San Bernardino | 22.9 | 70 | 7.1 | 53 | 16.5 | 24.7 | 0.5 | 2.7 | 2.6 |

| | | | | | | | | | | | | | | | |
|---|---|---|---|---|---|---|---|---|---|---|---|---|---|---|---|
| 6099001100 | 46.68 | 85.05 | 85-90% | 3899 | Stanislaus | 13.4 | 70.8 | 15.8 | 28.6 | 57.8 | 4.8 | 0.8 | 3.8 | 4.1 |
| 6029002900 | 46.68 | 85.04 | 85-90% | 7449 | Kern | 18.7 | 70.8 | 10.5 | 59.1 | 24.2 | 10.8 | 0.6 | 3.2 | 2 |
| 6071008002 | 46.66 | 85.03 | 85-90% | 7256 | San Bernardino | 17.1 | 74.9 | 8 | 65.8 | 16.8 | 10.6 | 0.4 | 4 | 2.4 |
| 6065042516 | 46.65 | 85.02 | 85-90% | 4177 | Riverside | 21.4 | 72.6 | 6 | 67.2 | 10.5 | 15.1 | 0.4 | 4.3 | 2.4 |
| 6037433403 | 46.64 | 85.00 | 85-90% | 4675 | Los Angeles | 17.5 | 77.2 | 5.3 | 82.7 | 2.4 | 0.2 | 0.1 | 14.4 | 0.2 |
| 6001403000 | 46.63 | 84.99 | 80-85% | 2788 | Alameda | 4.4 | 51.4 | 44.2 | 1.3 | 4.2 | 4.4 | 0.1 | 88.3 | 1.6 |
| 6037544001 | 46.63 | 84.98 | 80-85% | 4791 | Los Angeles | 15.1 | 76.6 | 8.3 | 69.2 | 7.1 | 7.3 | 0.1 | 14.8 | 1.6 |
| 6071001103 | 46.63 | 84.97 | 80-85% | 3997 | San Bernardino | 13.2 | 73.6 | 13.2 | 54 | 39 | 3.1 | 0.3 | 1.9 | 1.8 |
| 6071003000 | 46.62 | 84.95 | 80-85% | 3120 | San Bernardino | 14.4 | 71.4 | 14.2 | 73.8 | 15.4 | 6.6 | 0.3 | 2.1 | 1.7 |
| 6065042514 | 46.62 | 84.94 | 80-85% | 3165 | Riverside | 20.2 | 74.3 | 5.5 | 60.4 | 14.7 | 16.5 | 0.2 | 5.1 | 3.1 |
| 6037554302 | 46.62 | 84.93 | 80-85% | 3916 | Los Angeles | 16.5 | 78.1 | 5.4 | 53.8 | 11.6 | 19.5 | 0.3 | 12.8 | 2 |
| 6037310601 | 46.61 | 84.92 | 80-85% | 5716 | Los Angeles | 11.3 | 78.7 | 10 | 32.3 | 43.5 | 3.1 | 0.1 | 17.2 | 3.8 |
| 6037531201 | 46.60 | 84.90 | 80-85% | 5335 | Los Angeles | 18.4 | 74.5 | 7.1 | 97.8 | 1.4 | 0.1 | 0.1 | 0.2 | 0.3 |
| 6037191301 | 46.58 | 84.89 | 80-85% | 2327 | Los Angeles | 9.9 | 76.4 | 13.7 | 56.7 | 17.7 | 4 | 0.1 | 20.2 | 1.3 |
| 6037133000 | 46.56 | 84.88 | 80-85% | 4449 | Los Angeles | 12.9 | 76.3 | 10.8 | 55.9 | 27.3 | 3.1 | 0.1 | 11.5 | 2 |
| 6077005123 | 46.54 | 84.87 | 80-85% | 4493 | San Joaquin | 15.3 | 78.1 | 6.6 | 35.6 | 45.8 | 5.4 | 0.4 | 9 | 3.9 |
| 6013305000 | 46.53 | 84.85 | 80-85% | 6620 | Contra Costa | 16.8 | 75.6 | 7.6 | 45.6 | 33.7 | 12.9 | 0.6 | 2.7 | 4.4 |
| 6037270100 | 46.49 | 84.84 | 80-85% | 4412 | Los Angeles | 6.2 | 88.5 | 5.3 | 20.6 | 40.1 | 10.7 | 0.2 | 23.4 | 4.9 |
| 6067006702 | 46.49 | 84.83 | 80-85% | 7560 | Sacramento | 20.5 | 73 | 6.5 | 30.8 | 14.9 | 19.7 | 0.4 | 29.7 | 4.6 |
| 6107000202 | 46.49 | 84.82 | 80-85% | 2663 | Tulare | 18.1 | 73.6 | 8.3 | 81.5 | 13.7 | 0.2 | 0.4 | 3.2 | 1 |
| 6037501001 | 46.47 | 84.80 | 80-85% | 3248 | Los Angeles | 16.6 | 75.4 | 8 | 92.9 | 4.5 | 0.6 | 0.7 | 0.8 | 0.5 |
| 6013380000 | 46.47 | 84.79 | 80-85% | 5706 | Contra Costa | 12.8 | 79.3 | 7.9 | 22.9 | 28 | 28 | 0.2 | 16.4 | 4.6 |
| 6037403000 | 46.47 | 84.78 | 80-85% | 6835 | Los Angeles | 16.4 | 75.5 | 8.1 | 81.5 | 4.2 | 6.4 | 0.1 | 7.1 | 0.7 |
| 6037238200 | 46.47 | 84.76 | 80-85% | 5267 | Los Angeles | 13 | 71.8 | 15.2 | 21.8 | 1 | 74.1 | 0.3 | 0.9 | 1.9 |
| 6037208720 | 46.47 | 84.75 | 80-85% | 4179 | Los Angeles | 14.8 | 78.6 | 6.6 | 81.6 | 5 | 3 | 0.1 | 9.4 | 0.9 |
| 6065030900 | 46.46 | 84.74 | 80-85% | 3308 | Riverside | 15.4 | 77.9 | 6.7 | 65.2 | 23.9 | 5.2 | 0.3 | 3.3 | 2.1 |
| 6037600100 | 46.44 | 84.73 | 80-85% | 6657 | Los Angeles | 18.4 | 74.4 | 7.2 | 55.1 | 0.9 | 42.1 | 0.2 | 0.3 | 1.5 |
| 6077005202 | 46.40 | 84.71 | 80-85% | 6765 | San Joaquin | 15.8 | 75.5 | 8.7 | 25.8 | 49.4 | 6.1 | 0.3 | 13.3 | 5.1 |
| 6037191420 | 46.40 | 84.70 | 80-85% | 3365 | Los Angeles | 13.4 | 81.3 | 5.3 | 70 | 8.7 | 1.4 | 0 | 18.5 | 1.4 |
| 6037570303 | 46.38 | 84.69 | 80-85% | 4247 | Los Angeles | 18.2 | 77 | 4.8 | 62.8 | 8.5 | 15.2 | 0.3 | 11.4 | 1.8 |
| 6019003201 | 46.37 | 84.68 | 80-85% | 4398 | Fresno | 17.2 | 72.2 | 10.6 | 53.2 | 23.5 | 5.8 | 0.6 | 15.1 | 1.8 |
| 6037302104 | 46.32 | 84.66 | 80-85% | 3917 | Los Angeles | 9.4 | 78.7 | 11.9 | 25.7 | 39.4 | 2.6 | 0.2 | 28.3 | 3.8 |
| 6019001408 | 46.32 | 84.65 | 80-85% | 2504 | Fresno | 4.5 | 51.3 | 44.2 | 37.5 | 46.3 | 7.1 | 0.6 | 7.1 | 1.4 |
| 6071007110 | 46.27 | 84.64 | 80-85% | 4831 | San Bernardino | 14.2 | 77.7 | 8.1 | 39.3 | 25.3 | 8 | 0.2 | 22.9 | 4.3 |
| 6071004510 | 46.26 | 84.63 | 80-85% | 5178 | San Bernardino | 11.2 | 86.6 | 2.2 | 39.5 | 25.8 | 22.7 | 0.4 | 8.3 | 3.3 |
| 6013375000 | 46.26 | 84.61 | 80-85% | 4389 | Contra Costa | 19.7 | 75.2 | 5.1 | 78.6 | 3.6 | 12.6 | 0.1 | 3.7 | 1.4 |
| 6037502401 | 46.25 | 84.60 | 80-85% | 4747 | Los Angeles | 12.4 | 74.8 | 12.8 | 90.9 | 4.7 | 1.1 | 0.3 | 2.6 | 0.4 |
| 6073005300 | 46.24 | 84.59 | 80-85% | 6667 | San Diego | 1.5 | 85.9 | 12.6 | 33.1 | 46.8 | 9.1 | 0.5 | 7.6 | 2.9 |
| 6071003510 | 46.24 | 84.58 | 80-85% | 4512 | San Bernardino | 23.6 | 72.8 | 3.6 | 66.5 | 6.1 | 23.4 | 0.2 | 1.5 | 2.3 |
| 6001401700 | 46.23 | 84.56 | 80-85% | 2667 | Alameda | 12.3 | 83.2 | 4.5 | 25.6 | 25.9 | 33.1 | 0.4 | 10.3 | 4.6 |
| 6037433503 | 46.22 | 84.55 | 80-85% | 3108 | Los Angeles | 16.2 | 77 | 6.8 | 78.2 | 2.3 | 0.2 | 0 | 19.1 | 0.2 |
| 6037237720 | 46.22 | 84.54 | 80-85% | 3153 | Los Angeles | 21.5 | 74.5 | 4 | 75.3 | 0.5 | 22.5 | 0.1 | 0.2 | 1.5 |
| 6037221110 | 46.22 | 84.53 | 80-85% | 3565 | Los Angeles | 16.4 | 76.5 | 7.1 | 88.6 | 2.4 | 1.2 | 0.2 | 7.1 | 0.4 |
| 6073005700 | 46.21 | 84.51 | 80-85% | 1948 | San Diego | 2.7 | 82.7 | 14.6 | 17.7 | 58.9 | 12.6 | 0.9 | 6.6 | 3.3 |
| 6037234501 | 46.21 | 84.50 | 80-85% | 2728 | Los Angeles | 12.2 | 75.1 | 12.7 | 35.6 | 1.6 | 57.8 | 0.2 | 1.1 | 3.6 |
| 6037432901 | 46.20 | 84.49 | 80-85% | 4464 | Los Angeles | 11.2 | 76.9 | 11.9 | 29.6 | 5.1 | 0.4 | 0 | 64.2 | 0.6 |
| 6019003808 | 46.19 | 84.47 | 80-85% | 5082 | Fresno | 18 | 74.6 | 7.4 | 50.4 | 21.4 | 7.1 | 0.6 | 18.6 | 1.8 |
| 6071001810 | 46.19 | 84.46 | 80-85% | 4497 | San Bernardino | 16.4 | 78.4 | 5.2 | 79.2 | 10.7 | 4.8 | 0.2 | 4 | 1.2 |
| 6019004207 | 46.17 | 84.45 | 80-85% | 8115 | Fresno | 19.1 | 75 | 5.9 | 47.3 | 22.3 | 8.2 | 0.7 | 19.2 | 2.4 |
| 6059099601 | 46.16 | 84.44 | 80-85% | 7016 | Orange | 13.6 | 74.6 | 11.8 | 37.8 | 18.2 | 1.1 | 0.1 | 40.9 | 2 |
| 6025010200 | 46.15 | 84.42 | 80-85% | 2640 | Imperial | 18.8 | 69.6 | 11.6 | 83.8 | 14.2 | 0.6 | 0.2 | 0.5 | 0.7 |
| 6037121102 | 46.14 | 84.41 | 80-85% | 2721 | Los Angeles | 13.1 | 76 | 10.9 | 57.8 | 34 | 0.9 | 0.1 | 5.7 | 1.4 |
| 6037701801 | 46.13 | 84.40 | 80-85% | 5867 | Los Angeles | 7.2 | 81.8 | 11 | 37.2 | 35.9 | 8.7 | 0.4 | 14.3 | 3.5 |
| 6029000600 | 46.12 | 84.39 | 80-85% | 6931 | Kern | 21.5 | 67.6 | 10.9 | 46.9 | 30 | 16.8 | 1.2 | 2 | 3.1 |
| 6037197420 | 46.10 | 84.37 | 80-85% | 3509 | Los Angeles | 9.7 | 81.1 | 9.2 | 60.1 | 23.4 | 1.7 | 0.3 | 12.4 | 2.1 |
| 6037555001 | 46.10 | 84.36 | 80-85% | 5411 | Los Angeles | 13.3 | 76.9 | 9.8 | 46.1 | 17.7 | 8.5 | 0.5 | 25.2 | 2.1 |
| 6037553200 | 46.08 | 84.35 | 80-85% | 7055 | Los Angeles | 13 | 76 | 11 | 56.3 | 22.9 | 7.5 | 0.6 | 10.6 | 2.1 |
| 6071003700 | 46.06 | 84.34 | 80-85% | 3903 | San Bernardino | 18.9 | 70.8 | 10.3 | 71.9 | 10.4 | 15 | 0.4 | 1.1 | 1.2 |
| 6037602003 | 46.05 | 84.32 | 80-85% | 5124 | Los Angeles | 18.7 | 75.3 | 6 | 80.5 | 1.8 | 14.6 | 0.2 | 1.3 | 1.5 |
| 6019004002 | 46.04 | 84.31 | 80-85% | 7129 | Fresno | 19.3 | 72.4 | 8.3 | 75.4 | 13.3 | 0.2 | 0.3 | 9.4 | 1.5 |
| 6037407802 | 46.04 | 84.30 | 80-85% | 3635 | Los Angeles | 13.7 | 77.6 | 8.7 | 79.8 | 8 | 2.4 | 0.2 | 8.6 | 1 |
| 6059074406 | 46.04 | 84.29 | 80-85% | 3797 | Orange | 17.2 | 78.3 | 4.5 | 87.8 | 7.9 | 1.3 | 0.2 | 2 | 0.8 |
| 6099003201 | 46.03 | 84.27 | 80-85% | 5055 | Stanislaus | 16.9 | 74.8 | 8.3 | 73.9 | 21.4 | 1.5 | 0.3 | 1.5 | 1.3 |
| 6037402706 | 46.03 | 84.26 | 80-85% | 3945 | Los Angeles | 13.8 | 78.2 | 8 | 73.4 | 11.2 | 8.2 | 0.2 | 5.9 | 1.1 |
| 6037533401 | 46.01 | 84.25 | 80-85% | 5004 | Los Angeles | 17.7 | 76.2 | 6.1 | 97.7 | 1.6 | 0.1 | 0.1 | 0.1 | 0.4 |
| 6037502602 | 45.99 | 84.24 | 80-85% | 4321 | Los Angeles | 14.7 | 75 | 10.3 | 86.7 | 8.1 | 1 | 0.2 | 3.2 | 0.9 |

| | | | | | | | | | | | | | | | |
|---|---|---|---|---|---|---|---|---|---|---|---|---|---|---|---|
| 6037234902 | 45.99 | 84.22 | 80-85% | 4005 | Los Angeles | 15.9 | 75.5 | 8.6 | 44 | 1.8 | 51.4 | 0.1 | 0.3 | 2.4 |
| 6073003301 | 45.97 | 84.21 | 80-85% | 3337 | San Diego | 17.1 | 75.9 | 7 | 66.1 | 1.9 | 26.6 | 0 | 3.9 | 1.4 |
| 6037575202 | 45.96 | 84.20 | 80-85% | 4916 | Los Angeles | 19.2 | 75.9 | 4.9 | 61 | 2.8 | 6.8 | 0.1 | 28 | 1.4 |
| 6029002812 | 45.93 | 84.18 | 80-85% | 5215 | Kern | 19.1 | 73.5 | 7.4 | 47.2 | 34.5 | 13 | 1 | 1.8 | 2.6 |
| 6019004216 | 45.93 | 84.17 | 80-85% | 2629 | Fresno | 15.6 | 75.6 | 8.8 | 36.7 | 40.7 | 4.7 | 0.9 | 14.1 | 2.9 |
| 6059087102 | 45.93 | 84.16 | 80-85% | 5816 | Orange | 18.4 | 77.8 | 3.8 | 60.7 | 16 | 3.6 | 0.2 | 17.8 | 1.7 |
| 6073004800 | 45.91 | 84.15 | 80-85% | 4115 | San Diego | 17.4 | 77.1 | 5.5 | 88.5 | 5 | 4.1 | 0.1 | 1.1 | 1.3 |
| 6059011720 | 45.89 | 84.13 | 80-85% | 7329 | Orange | 22.3 | 74.6 | 3.1 | 91 | 4.5 | 1.2 | 0.3 | 2.6 | 0.5 |
| 6085501600 | 45.89 | 84.12 | 80-85% | 6854 | Santa Clara | 11.9 | 84.4 | 3.7 | 49.4 | 24.7 | 4.7 | 0.3 | 18.2 | 2.7 |
| 6037294302 | 45.88 | 84.11 | 80-85% | 4754 | Los Angeles | 17.1 | 75.9 | 7 | 87.9 | 6 | 1.9 | 0.1 | 3.1 | 1 |
| 6029003700 | 45.85 | 84.10 | 80-85% | 3953 | Kern | 20.1 | 72.8 | 7.1 | 62.5 | 33.5 | 1.4 | 0.7 | 0.8 | 1.1 |
| 6059086404 | 45.84 | 84.08 | 80-85% | 6546 | Orange | 15.4 | 77.8 | 6.8 | 76.9 | 10.1 | 0.7 | 0.3 | 11 | 0.9 |
| 6037217200 | 45.82 | 84.07 | 80-85% | 3905 | Los Angeles | 11.1 | 79 | 9.9 | 40.9 | 17.3 | 29.5 | 0.1 | 8.3 | 3.9 |
| 6037211202 | 45.82 | 84.06 | 80-85% | 2645 | Los Angeles | 12.9 | 80.3 | 6.8 | 69.6 | 7.8 | 2.9 | 0.1 | 17.7 | 2 |
| 6037320300 | 45.79 | 84.05 | 80-85% | 6948 | Los Angeles | 15.3 | 74.2 | 10.5 | 96.4 | 2 | 0.4 | 0.3 | 0.6 | 0.3 |
| 6107001701 | 45.79 | 84.03 | 80-85% | 6117 | Tulare | 18.6 | 73.8 | 7.6 | 52 | 40.6 | 2.4 | 1.1 | 2.1 | 1.8 |
| 6037500600 | 45.78 | 84.02 | 80-85% | 5688 | Los Angeles | 15.6 | 72.8 | 11.6 | 95 | 3.2 | 0.2 | 0.1 | 1.1 | 0.4 |
| 6019006700 | 45.77 | 84.01 | 80-85% | 6304 | Fresno | 16.6 | 69.3 | 14.1 | 60.1 | 33.9 | 0.1 | 0.3 | 4 | 1.6 |
| 6065041813 | 45.76 | 84.00 | 80-85% | 6698 | Riverside | 15.5 | 72.9 | 11.6 | 65.9 | 27.4 | 3.2 | 0.4 | 2.1 | 1 |
| 6037186404 | 45.76 | 83.98 | 80-85% | 2471 | Los Angeles | 13.6 | 78.5 | 7.9 | 77.9 | 7.1 | 0.6 | 0.2 | 13.5 | 0.8 |
| 6037236204 | 45.76 | 83.97 | 80-85% | 3203 | Los Angeles | 18.6 | 73.8 | 7.6 | 42.4 | 1.2 | 53.8 | 0.2 | 0.4 | 2 |
| 6077003403 | 45.76 | 83.96 | 80-85% | 4586 | San Joaquin | 15.9 | 76.7 | 7.4 | 30.2 | 12.2 | 12.5 | 0.4 | 41.1 | 3.6 |
| 6037208802 | 45.74 | 83.95 | 80-85% | 2906 | Los Angeles | 10.6 | 78.1 | 11.3 | 59.8 | 13.8 | 5.6 | 0.2 | 19.2 | 1.4 |
| 6065041412 | 45.71 | 83.93 | 80-85% | 4415 | Riverside | 12.9 | 72.5 | 14.6 | 51 | 30.4 | 4.6 | 0.1 | 11.8 | 2.1 |
| 6019004504 | 45.71 | 83.92 | 80-85% | 4762 | Fresno | 12.3 | 70.1 | 17.6 | 36.8 | 49.2 | 5.6 | 0.5 | 5.6 | 2.4 |
| 6037302103 | 45.70 | 83.91 | 80-85% | 5504 | Los Angeles | 8.3 | 77.3 | 14.4 | 22.1 | 55.1 | 0.9 | 0 | 18.3 | 3.7 |
| 6071003503 | 45.70 | 83.89 | 80-85% | 5489 | San Bernardino | 15.9 | 79 | 5.1 | 66 | 9.7 | 18 | 0.2 | 3.9 | 2.2 |
| 6067009007 | 45.68 | 83.88 | 80-85% | 2818 | Sacramento | 16.9 | 77 | 6.1 | 26.3 | 36.1 | 20.2 | 0.8 | 10.8 | 5.9 |
| 6037189201 | 45.68 | 83.87 | 80-85% | 3293 | Los Angeles | 4.6 | 84.2 | 11.2 | 14.3 | 68.9 | 3.6 | 0.1 | 10.1 | 3.1 |
| 6019003004 | 45.67 | 83.86 | 80-85% | 2301 | Fresno | 14.8 | 72.6 | 12.6 | 49.5 | 28.6 | 5.3 | 1.3 | 12.6 | 2.8 |
| 6037572302 | 45.67 | 83.84 | 80-85% | 3483 | Los Angeles | 14.9 | 76.1 | 9 | 53.9 | 3.7 | 12.2 | 0.1 | 27.7 | 2.3 |
| 6037601002 | 45.67 | 83.83 | 80-85% | 5311 | Los Angeles | 14.6 | 78 | 7.4 | 43.1 | 2.1 | 49.6 | 0.2 | 3.4 | 1.7 |
| 6037123104 | 45.66 | 83.82 | 80-85% | 4596 | Los Angeles | 12.9 | 77.4 | 9.7 | 63.6 | 24.6 | 3.5 | 0.3 | 5.4 | 2.5 |
| 6065045604 | 45.66 | 83.81 | 80-85% | 13694 | Riverside | 22.9 | 73 | 4.1 | 97.4 | 1.7 | 0.2 | 0.1 | 0.3 | 0.2 |
| 6029004901 | 45.66 | 83.79 | 80-85% | 5733 | Kern | 21.2 | 72 | 6.8 | 76.6 | 4.8 | 1.2 | 0.1 | 15.8 | 1.5 |
| 6039000202 | 45.63 | 83.78 | 80-85% | 6109 | Madera | 17.2 | 73.9 | 8.9 | 41.2 | 47.9 | 2.8 | 0.7 | 5.1 | 2.4 |
| 6071007601 | 45.58 | 83.77 | 80-85% | 7277 | San Bernardino | 22.2 | 73 | 4.8 | 66.2 | 12.3 | 13 | 0.4 | 5.4 | 2.5 |
| 6037408138 | 45.56 | 83.76 | 80-85% | 5936 | Los Angeles | 16.5 | 75.2 | 8.3 | 88.1 | 6 | 1.1 | 0.1 | 4 | 0.7 |
| 6037501504 | 45.55 | 83.74 | 80-85% | 3592 | Los Angeles | 13.1 | 69 | 17.9 | 69 | 21 | 1.4 | 0.3 | 6.8 | 1.4 |
| 6019008401 | 45.55 | 83.73 | 80-85% | 7991 | Fresno | 19 | 74.4 | 6.6 | 90.5 | 8.2 | 0.4 | 0.3 | 0.5 | 0.3 |
| 6037235202 | 45.55 | 83.72 | 80-85% | 4557 | Los Angeles | 14.3 | 74.7 | 11 | 31.5 | 1.4 | 64.6 | 0.2 | 0.6 | 1.8 |
| 6067005101 | 45.54 | 83.71 | 80-85% | 4454 | Sacramento | 16.4 | 74.1 | 9.5 | 28.3 | 25.6 | 12.5 | 0.5 | 27.9 | 5.3 |
| 6037222001 | 45.54 | 83.69 | 80-85% | 3237 | Los Angeles | 12.7 | 78.5 | 8.8 | 63.8 | 4 | 26.8 | 0.3 | 2 | 3.1 |
| 6037500404 | 45.52 | 83.68 | 80-85% | 4795 | Los Angeles | 13.7 | 73.5 | 12.8 | 88.6 | 4.2 | 0.4 | 0.1 | 6.1 | 0.6 |
| 6037533107 | 45.52 | 83.67 | 80-85% | 3645 | Los Angeles | 17.1 | 76.5 | 6.4 | 97.2 | 2.2 | 0.1 | 0.1 | 0.3 | 0.1 |
| 6059001404 | 45.51 | 83.65 | 80-85% | 3972 | Orange | 17.1 | 75.9 | 7 | 76.8 | 17.4 | 0.9 | 0.3 | 3.5 | 1.1 |
| 6073013205 | 45.50 | 83.64 | 80-85% | 2381 | San Diego | 17 | 75.3 | 7.7 | 85.7 | 8.1 | 2.9 | 0.1 | 2.3 | 1 |
| 6037197300 | 45.50 | 83.63 | 80-85% | 3909 | Los Angeles | 8.1 | 82.4 | 9.5 | 44.4 | 33.1 | 1.5 | 0.2 | 18.3 | 2.6 |
| 6019007600 | 45.49 | 83.62 | 80-85% | 4806 | Fresno | 18.8 | 71.8 | 9.4 | 69.3 | 23.6 | 0.9 | 0.3 | 4.7 | 1.2 |
| 6001432400 | 45.48 | 83.60 | 80-85% | 5814 | Alameda | 13.8 | 76.3 | 9.9 | 37.4 | 23.9 | 8 | 0.4 | 26.5 | 3.7 |
| 6037199202 | 45.48 | 83.59 | 80-85% | 3031 | Los Angeles | 13.8 | 76.4 | 9.8 | 79.2 | 7.7 | 2 | 0.1 | 9.9 | 1.1 |
| 6037301802 | 45.47 | 83.58 | 80-85% | 3578 | Los Angeles | 9.6 | 75.3 | 15.1 | 16.2 | 61.5 | 1 | 0 | 17 | 4.3 |
| 6047000601 | 45.47 | 83.57 | 80-85% | 5438 | Merced | 16.8 | 73.6 | 9.6 | 56.1 | 36 | 2.7 | 0.4 | 2.6 | 2.2 |
| 6071000205 | 45.46 | 83.55 | 80-85% | 4736 | San Bernardino | 12.8 | 74.5 | 12.7 | 65.2 | 21.6 | 4.9 | 0.2 | 6 | 2.1 |
| 6037120010 | 45.46 | 83.54 | 80-85% | 2844 | Los Angeles | 14.6 | 78.8 | 6.6 | 77.9 | 7.7 | 2.1 | 0.1 | 10.1 | 2.2 |
| 6037601900 | 45.45 | 83.53 | 80-85% | 5685 | Los Angeles | 19.1 | 76.6 | 4.3 | 82.4 | 1.3 | 13.9 | 0.1 | 1.2 | 1.1 |
| 6065041500 | 45.44 | 83.52 | 80-85% | 2053 | Riverside | 18.8 | 73.8 | 7.4 | 87.3 | 7.2 | 2.3 | 0.5 | 1.9 | 0.8 |
| 6065041201 | 45.42 | 83.50 | 80-85% | 4299 | Riverside | 14.4 | 75.7 | 9.9 | 67 | 22.2 | 3.7 | 0.3 | 5.8 | 1 |
| 6099000303 | 45.41 | 83.49 | 80-85% | 5883 | Stanislaus | 16.3 | 76 | 7.7 | 53.9 | 39.4 | 1.8 | 0.5 | 2.4 | 2 |
| 6073011700 | 45.40 | 83.48 | 80-85% | 6773 | San Diego | 13.8 | 70.3 | 15.9 | 61.6 | 7.4 | 2.4 | 0.2 | 26.1 | 2.3 |
| 6065041409 | 45.38 | 83.47 | 80-85% | 14898 | Riverside | 15.6 | 77.8 | 6.6 | 32.2 | 42.1 | 6.9 | 0.2 | 15.7 | 2.9 |
| 6071003606 | 45.37 | 83.45 | 80-85% | 5109 | San Bernardino | 16.7 | 76.2 | 7.1 | 78.6 | 14.7 | 3.5 | 0.2 | 1.6 | 1.3 |
| 6037501804 | 45.37 | 83.44 | 80-85% | 2131 | Los Angeles | 15.1 | 77 | 7.9 | 79.3 | 16.8 | 0.7 | 0.2 | 2.3 | 0.8 |
| 6065040403 | 45.36 | 83.43 | 80-85% | 5801 | Riverside | 15.2 | 78.4 | 6.4 | 72.6 | 23.9 | 1 | 0.3 | 1.2 | 1 |
| 6037570601 | 45.35 | 83.42 | 80-85% | 5421 | Los Angeles | 16.4 | 78.1 | 5.5 | 57.3 | 8.6 | 17.9 | 0.1 | 14 | 2.1 |
| 6037224320 | 45.35 | 83.40 | 80-85% | 3224 | Los Angeles | 16.1 | 75.3 | 8.6 | 92 | 1.4 | 3.9 | 0.1 | 2.6 | 0.1 |

| | | | | | | | | | | | | | | |
|---|---|---|---|---|---|---|---|---|---|---|---|---|---|---|
| 6037204120 | 45.34 | 83.39 | 80-85% | 2650 | Los Angeles | 16.9 | 74.6 | 8.5 | 97.7 | 0.9 | 0.1 | 0.2 | 0.9 | 0.2 |
| 6037554002 | 45.33 | 83.38 | 80-85% | 5659 | Los Angeles | 15.4 | 77.2 | 7.4 | 58.3 | 16.9 | 9.7 | 0.1 | 13.4 | 1.6 |
| 6019005607 | 45.33 | 83.36 | 80-85% | 3993 | Fresno | 13.9 | 72.6 | 13.5 | 31 | 54.5 | 3.7 | 1.1 | 6.7 | 3 |
| 6107001100 | 45.33 | 83.35 | 80-85% | 6983 | Tulare | 22.3 | 71.9 | 5.8 | 74.9 | 14.3 | 1.9 | 0.5 | 6.8 | 1.6 |
| 6037127606 | 45.33 | 83.34 | 80-85% | 3164 | Los Angeles | 15.1 | 77.9 | 7 | 60.8 | 24.2 | 5.3 | 0.3 | 7.1 | 2.2 |
| 6037104403 | 45.32 | 83.33 | 80-85% | 3282 | Los Angeles | 15.8 | 75.3 | 8.9 | 96.3 | 1.8 | 0.5 | 0.1 | 0.9 | 0.4 |
| 6019005000 | 45.30 | 83.31 | 80-85% | 3917 | Fresno | 13.5 | 72.4 | 14.1 | 40.8 | 42.3 | 4.4 | 0.7 | 8.9 | 3 |
| 6037240401 | 45.29 | 83.30 | 80-85% | 5383 | Los Angeles | 20.8 | 74.5 | 4.7 | 71.2 | 0.6 | 26.5 | 0.1 | 0.4 | 1.2 |
| 6065031602 | 45.29 | 83.29 | 80-85% | 5314 | Riverside | 16.2 | 74.1 | 9.7 | 59.3 | 27.9 | 6 | 1 | 3.4 | 2.4 |
| 6037104103 | 45.29 | 83.28 | 80-85% | 4085 | Los Angeles | 14.6 | 77.2 | 8.2 | 71.4 | 7.5 | 12.6 | 0.1 | 6.9 | 1.5 |
| 6111004715 | 45.27 | 83.26 | 80-85% | 5020 | Ventura | 16.4 | 75.3 | 8.3 | 73.6 | 12.4 | 3 | 0.2 | 9 | 1.9 |
| 6037554203 | 45.27 | 83.25 | 80-85% | 3689 | Los Angeles | 14.3 | 76.2 | 9.5 | 51.5 | 25 | 10.8 | 0.5 | 10.8 | 1.4 |
| 6059011721 | 45.26 | 83.24 | 80-85% | 5023 | Orange | 17.2 | 77.8 | 5 | 71.1 | 19.1 | 2 | 0.2 | 5.8 | 1.9 |
| 6019005305 | 45.26 | 83.23 | 80-85% | 3635 | Fresno | 17.2 | 72 | 10.8 | 41.1 | 34.1 | 7.1 | 1.4 | 13.4 | 2.9 |
| 6059086306 | 45.25 | 83.21 | 80-85% | 3658 | Orange | 12.9 | 76.3 | 10.8 | 48.6 | 32.7 | 2.6 | 0.2 | 13.8 | 2.1 |
| 6037572100 | 45.22 | 83.20 | 80-85% | 1045 | Los Angeles | 11.3 | 78.1 | 10.6 | 29.3 | 18.8 | 13.7 | 0.5 | 34.3 | 3.5 |
| 6085503110 | 45.22 | 83.19 | 80-85% | 4618 | Santa Clara | 20.9 | 73.2 | 5.9 | 64 | 2.2 | 2 | 0.3 | 30.5 | 0.9 |
| 6059074602 | 45.22 | 83.18 | 80-85% | 9156 | Orange | 19.9 | 75.7 | 4.4 | 96.3 | 2.5 | 0.3 | 0.1 | 0.6 | 0.1 |
| 6059086402 | 45.22 | 83.16 | 80-85% | 5651 | Orange | 15.1 | 76.5 | 8.4 | 68.8 | 20.2 | 1.2 | 0.2 | 8.1 | 1.5 |
| 6047001002 | 45.22 | 83.15 | 80-85% | 13467 | Merced | 15.4 | 76.9 | 7.7 | 35.1 | 36.3 | 5.2 | 0.4 | 19.7 | 3.3 |
| 6059089001 | 45.21 | 83.14 | 80-85% | 7154 | Orange | 13.7 | 76.9 | 9.4 | 44.1 | 5.2 | 0.3 | 0.1 | 49.1 | 1.3 |
| 6037402403 | 45.20 | 83.13 | 80-85% | 5381 | Los Angeles | 11.4 | 81.4 | 7.2 | 59.4 | 21.1 | 5.6 | 0.1 | 10.8 | 3 |
| 6029001400 | 45.20 | 83.11 | 80-85% | 7766 | Kern | 22.2 | 70.4 | 7.4 | 79.4 | 13.4 | 4.4 | 1 | 0.5 | 1.4 |
| 6077003110 | 45.19 | 83.10 | 80-85% | 3708 | San Joaquin | 15.6 | 73 | 11.4 | 36 | 36.9 | 12.7 | 0.3 | 9.1 | 4.9 |
| 6037407602 | 45.19 | 83.09 | 80-85% | 4008 | Los Angeles | 15.5 | 75.5 | 9 | 84.8 | 6.3 | 0.9 | 0.2 | 7.3 | 0.5 |
| 6037602004 | 45.18 | 83.07 | 80-85% | 4126 | Los Angeles | 16.4 | 77.3 | 6.3 | 73.2 | 0.8 | 23.6 | 0 | 1.7 | 0.7 |
| 6029003103 | 45.17 | 83.06 | 80-85% | 3979 | Kern | 18.4 | 74.9 | 6.7 | 76.7 | 18.5 | 2.3 | 0.8 | 0.9 | 0.8 |
| 6037600902 | 45.15 | 83.05 | 80-85% | 6613 | Los Angeles | 14.8 | 76.9 | 8.3 | 41.8 | 2.7 | 52.6 | 0.2 | 0.8 | 1.9 |
| 6095250801 | 45.15 | 83.04 | 80-85% | 3917 | Solano | 10.5 | 78.9 | 10.6 | 13.1 | 33.6 | 30.1 | 0.3 | 17.5 | 5.4 |
| 6071003509 | 45.15 | 83.02 | 80-85% | 4827 | San Bernardino | 18.7 | 74.4 | 6.9 | 79 | 12.7 | 5.9 | 0.1 | 1.4 | 1 |
| 6067009318 | 45.14 | 83.01 | 80-85% | 2620 | Sacramento | 14.9 | 77.1 | 8 | 23.1 | 16.7 | 12 | 0.3 | 43.3 | 4.7 |
| 6037211310 | 45.10 | 83.00 | 80-85% | 3846 | Los Angeles | 14 | 80.8 | 5.2 | 74.8 | 6.6 | 2.9 | 0.1 | 14.3 | 1.5 |
| 6037550100 | 45.10 | 82.99 | 80-85% | 7518 | Los Angeles | 13.8 | 76.4 | 9.8 | 77.2 | 11.5 | 2.4 | 0.1 | 8 | 0.8 |
| 6037213201 | 45.10 | 82.97 | 80-85% | 4198 | Los Angeles | 13.2 | 76.8 | 10 | 50.4 | 2.7 | 2.9 | 0.1 | 42.9 | 1 |
| 6019005301 | 45.09 | 82.96 | 80-85% | 5740 | Fresno | 14.8 | 74 | 11.2 | 44.5 | 33.4 | 5.3 | 0.6 | 14 | 2.2 |
| 6029004101 | 45.08 | 82.95 | 80-85% | 4917 | Kern | 18.7 | 70.2 | 11.1 | 64.4 | 32.7 | 0.4 | 0.3 | 0.9 | 1.2 |
| 6019004704 | 45.08 | 82.94 | 80-85% | 5212 | Fresno | 21.9 | 71.8 | 6.3 | 62.7 | 18.5 | 11 | 0.6 | 5 | 2.2 |
| 6037237102 | 45.07 | 82.92 | 80-85% | 3254 | Los Angeles | 18.3 | 74.3 | 7.4 | 73.8 | 0.8 | 23.6 | 0 | 0.6 | 1.3 |
| 6037432201 | 45.06 | 82.91 | 80-85% | 4342 | Los Angeles | 10.1 | 72.2 | 17.7 | 23.5 | 11.1 | 0.6 | 0.2 | 63.8 | 0.9 |
| 6037601100 | 45.06 | 82.90 | 80-85% | 6533 | Los Angeles | 16.4 | 74.9 | 8.7 | 58.5 | 2.8 | 33.2 | 0.3 | 3.4 | 1.7 |
| 6037234600 | 45.05 | 82.89 | 80-85% | 5024 | Los Angeles | 11.7 | 75.9 | 12.4 | 31.5 | 1.6 | 63.4 | 0.1 | 0.9 | 2.5 |
| 6067004801 | 45.03 | 82.87 | 80-85% | 5899 | Sacramento | 15.1 | 72.8 | 12.1 | 20.4 | 11.3 | 15.8 | 0.3 | 48 | 4.2 |
| 6047000301 | 45.03 | 82.86 | 80-85% | 4790 | Merced | 18.4 | 75.3 | 6.3 | 71.3 | 9.6 | 0.5 | 0.2 | 16.7 | 1.6 |
| 6099003805 | 45.02 | 82.85 | 80-85% | 2667 | Stanislaus | 18.1 | 76.6 | 5.3 | 41.5 | 44.8 | 1.2 | 0.5 | 8.9 | 3.2 |
| 6031001002 | 45.02 | 82.84 | 80-85% | 4424 | Kings | 20.3 | 69.6 | 10.1 | 68.8 | 20.8 | 5.2 | 0.6 | 2.9 | 1.7 |
| 6037218600 | 45.00 | 82.82 | 80-85% | 3142 | Los Angeles | 14.2 | 76.3 | 9.5 | 52.7 | 5.9 | 36.2 | 0.2 | 2.2 | 2.8 |
| 6037554204 | 44.99 | 82.81 | 80-85% | 4391 | Los Angeles | 16 | 72.5 | 11.5 | 58 | 14.9 | 15.6 | 0.4 | 8.7 | 2.4 |
| 6087110400 | 44.98 | 82.80 | 80-85% | 7976 | Santa Cruz | 21 | 75.2 | 3.8 | 82.2 | 11.7 | 0.6 | 0.2 | 4.5 | 0.9 |
| 6099002802 | 44.96 | 82.78 | 80-85% | 6310 | Stanislaus | 15 | 74.2 | 10.8 | 37.8 | 57.2 | 0.5 | 0.8 | 1.6 | 2.2 |
| 6037601801 | 44.96 | 82.77 | 80-85% | 3789 | Los Angeles | 17.6 | 78 | 4.4 | 90.3 | 1.8 | 4.8 | 0.2 | 2 | 1 |
| 6019006100 | 44.95 | 82.76 | 80-85% | 7536 | Fresno | 18.4 | 72.9 | 8.7 | 79.4 | 13.4 | 0.8 | 0.5 | 5 | 0.9 |
| 6037119340 | 44.93 | 82.75 | 80-85% | 3884 | Los Angeles | 22.5 | 75.4 | 2.1 | 94.1 | 2.2 | 2 | 0 | 1.3 | 0.4 |
| 6019006502 | 44.93 | 82.73 | 80-85% | 4159 | Fresno | 21.7 | 71.1 | 7.2 | 89.4 | 8.3 | 0.4 | 0.5 | 1 | 0.4 |
| 6037106648 | 44.93 | 82.72 | 80-85% | 3890 | Los Angeles | 18.1 | 74.6 | 7.3 | 89.4 | 5.5 | 2.2 | 0.2 | 1.4 | 1.2 |
| 6107001004 | 44.92 | 82.71 | 80-85% | 8235 | Tulare | 21 | 72.6 | 6.4 | 77.6 | 7.3 | 1.2 | 0.4 | 12.3 | 1.2 |
| 6037600400 | 44.92 | 82.70 | 80-85% | 3986 | Los Angeles | 12.4 | 72.5 | 15.1 | 12.8 | 1.7 | 81.9 | 0.1 | 0.8 | 2.7 |
| 6037127806 | 44.92 | 82.68 | 80-85% | 3447 | Los Angeles | 12.9 | 80.5 | 6.6 | 60.8 | 23.5 | 5.8 | 0.3 | 7.9 | 1.8 |
| 6001433200 | 44.90 | 82.67 | 80-85% | 6897 | Alameda | 10.9 | 74 | 15.1 | 22.9 | 24.1 | 15.5 | 0.2 | 33.8 | 3.5 |
| 6037195600 | 44.88 | 82.66 | 80-85% | 3340 | Los Angeles | 10.3 | 80.6 | 9.1 | 55.7 | 24.9 | 2.6 | 0.1 | 14.2 | 2.5 |
| 6037534002 | 44.88 | 82.65 | 80-85% | 4352 | Los Angeles | 16.7 | 75.6 | 7.7 | 91.4 | 5.7 | 1.5 | 0.3 | 0.9 | 0.3 |
| 6107003200 | 44.87 | 82.63 | 80-85% | 6446 | Tulare | 22.1 | 72.5 | 5.4 | 80.3 | 18.6 | 0.1 | 0.3 | 0.3 | 0.5 |
| 6037209520 | 44.86 | 82.62 | 80-85% | 2791 | Los Angeles | 14.1 | 80.2 | 5.7 | 83.8 | 1.7 | 2.5 | 0.3 | 11.2 | 0.4 |
| 6037269700 | 44.84 | 82.61 | 80-85% | 4085 | Los Angeles | 12 | 79.2 | 8.8 | 36.1 | 35.6 | 12.6 | 0.2 | 11.3 | 4.3 |
| 6001409300 | 44.83 | 82.60 | 80-85% | 5229 | Alameda | 17 | 74.2 | 8.8 | 60.1 | 2.8 | 31.4 | 0.2 | 3.5 | 1.9 |
| 6019005403 | 44.83 | 82.58 | 80-85% | 4171 | Fresno | 15.2 | 80.9 | 3.9 | 36 | 31 | 15.4 | 0.8 | 14.1 | 2.7 |
| 6065030200 | 44.83 | 82.57 | 80-85% | 4633 | Riverside | 12.4 | 77.9 | 9.7 | 34.1 | 53.2 | 6.2 | 0.6 | 2.5 | 3.4 |

| | | | | | | | | | | | | | | |
|---|---|---|---|---|---|---|---|---|---|---|---|---|---|---|
| 6037543322 | 44.82 | 82.56 | 80-85% | 6611 | Los Angeles | 9.9 | 71.5 | 18.6 | 9.6 | 3.1 | 76 | 0.1 | 8 | 3.2 |
| 6053010101 | 44.80 | 82.55 | 80-85% | 4518 | Monterey | 19.7 | 74.8 | 5.5 | 87.9 | 8.9 | 0.3 | 0.3 | 1.8 | 0.8 |
| 6037602507 | 44.78 | 82.53 | 80-85% | 4156 | Los Angeles | 15.5 | 78 | 6.5 | 36.5 | 5.4 | 49 | 0.2 | 6.5 | 2.4 |
| 6047001401 | 44.77 | 82.52 | 80-85% | 3953 | Merced | 17.3 | 74 | 8.7 | 49.7 | 35.7 | 4.7 | 1.1 | 5.7 | 3.1 |
| 6071000605 | 44.76 | 82.51 | 80-85% | 5274 | San Bernardino | 17.6 | 73.5 | 8.9 | 90.4 | 6.9 | 0.5 | 0.1 | 1.7 | 0.4 |
| 6037552601 | 44.75 | 82.49 | 80-85% | 5720 | Los Angeles | 16.2 | 76.6 | 7.2 | 92 | 3.6 | 0.6 | 0.4 | 2.8 | 0.6 |
| 6037203900 | 44.73 | 82.48 | 80-85% | 2944 | Los Angeles | 16.2 | 74.8 | 9 | 97.3 | 1.2 | 0.4 | 0.1 | 0.7 | 0.2 |
| 6037407001 | 44.73 | 82.47 | 80-85% | 5905 | Los Angeles | 15.5 | 74.6 | 9.9 | 88.3 | 4.1 | 1.1 | 0.1 | 5.9 | 0.4 |
| 6065044000 | 44.73 | 82.46 | 80-85% | 2109 | Riverside | 17.6 | 75.7 | 6.7 | 64.2 | 27.5 | 2.1 | 1.4 | 2.5 | 2.3 |
| 6037190100 | 44.72 | 82.44 | 80-85% | 4481 | Los Angeles | 3.1 | 90.8 | 6.1 | 18.2 | 62.6 | 6.8 | 0.3 | 8.7 | 3.3 |
| 6037575103 | 44.70 | 82.43 | 80-85% | 5119 | Los Angeles | 14.6 | 80.4 | 5 | 43.3 | 20.4 | 19.9 | 0.5 | 12 | 3.9 |
| 6037541802 | 44.69 | 82.42 | 80-85% | 5431 | Los Angeles | 18.4 | 76 | 5.6 | 87.9 | 1.2 | 9.7 | 0.2 | 0.4 | 0.6 |
| 6037269601 | 44.69 | 82.41 | 80-85% | 3413 | Los Angeles | 14.9 | 79.9 | 5.2 | 64.2 | 8.8 | 20.6 | 0.2 | 3.1 | 3 |
| 6001401500 | 44.68 | 82.39 | 80-85% | 2630 | Alameda | 9.2 | 83.8 | 7 | 15.4 | 20 | 52.9 | 0.1 | 7.6 | 3.9 |
| 6039000503 | 44.68 | 82.38 | 80-85% | 8539 | Madera | 17 | 73.6 | 9.4 | 57.1 | 31.7 | 3 | 0.5 | 5.8 | 1.9 |
| 6037221710 | 44.67 | 82.37 | 80-85% | 2621 | Los Angeles | 10.9 | 77.9 | 11.2 | 76.5 | 6 | 7.5 | 0 | 9 | 1 |
| 6029003113 | 44.67 | 82.36 | 80-85% | 4784 | Kern | 18.6 | 69.7 | 11.7 | 59.5 | 22.4 | 10.1 | 0.3 | 5.7 | 2 |
| 6037191110 | 44.62 | 82.34 | 80-85% | 3338 | Los Angeles | 6.8 | 75.7 | 17.5 | 36.6 | 47.5 | 3.1 | 0.2 | 10.1 | 2.6 |
| 6067003204 | 44.59 | 82.33 | 80-85% | 5456 | Sacramento | 17.2 | 74.1 | 8.7 | 37.5 | 10.3 | 8.4 | 0.6 | 39.9 | 3.2 |
| 6071004403 | 44.58 | 82.32 | 80-85% | 5647 | San Bernardino | 17.8 | 76.8 | 5.4 | 77.7 | 9.8 | 7.9 | 0.3 | 2.8 | 1.5 |
| 6029005204 | 44.56 | 82.31 | 80-85% | 6158 | Kern | 9.9 | 67 | 23.1 | 10.1 | 83.1 | 0.2 | 2.1 | 0.7 | 3.7 |
| 6065031502 | 44.54 | 82.29 | 80-85% | 8020 | Riverside | 15.6 | 72.2 | 12.2 | 52.4 | 36.6 | 5.3 | 0.4 | 3.3 | 2 |
| 6085504602 | 44.52 | 82.28 | 80-85% | 2144 | Santa Clara | 13.9 | 76.8 | 9.3 | 61.1 | 17.6 | 2.1 | 0.4 | 16.7 | 2.1 |
| 6085503214 | 44.50 | 82.27 | 80-85% | 7253 | Santa Clara | 16.6 | 72.7 | 10.7 | 35.4 | 6.1 | 1.5 | 0.1 | 55.5 | 1.3 |
| 6071007303 | 44.50 | 82.26 | 80-85% | 4828 | San Bernardino | 13.2 | 77.5 | 9.3 | 30.5 | 30.7 | 11.9 | 0.2 | 22.9 | 3.7 |
| 6037222500 | 44.50 | 82.24 | 80-85% | 4963 | Los Angeles | 14.8 | 77.9 | 7.3 | 71.7 | 1.5 | 23.2 | 0.3 | 1.8 | 1.6 |
| 6071003612 | 44.48 | 82.23 | 80-85% | 4256 | San Bernardino | 17.3 | 74.6 | 8.1 | 68 | 12.4 | 11.8 | 0.3 | 5.9 | 1.7 |
| 6047000304 | 44.47 | 82.22 | 80-85% | 9116 | Merced | 17.8 | 74.5 | 7.7 | 72.9 | 8.8 | 0.4 | 0.3 | 16.3 | 1.2 |
| 6107001302 | 44.44 | 82.20 | 80-85% | 8037 | Tulare | 18.6 | 72.5 | 8.9 | 52 | 37.1 | 2.2 | 0.6 | 5.9 | 2.2 |
| 6037294410 | 44.43 | 82.19 | 80-85% | 4579 | Los Angeles | 16.5 | 75.4 | 8.1 | 40.9 | 13.5 | 23.9 | 0.1 | 18.4 | 3.1 |
| 6037554105 | 44.42 | 82.18 | 80-85% | 4569 | Los Angeles | 19.4 | 74.1 | 6.5 | 54.7 | 13.3 | 19.9 | 0.1 | 10 | 2 |
| 6013366002 | 44.39 | 82.17 | 80-85% | 6093 | Contra Costa | 17.9 | 76.1 | 6 | 61 | 8.2 | 13.7 | 0.3 | 14.3 | 2.5 |
| 6037407702 | 44.38 | 82.15 | 80-85% | 6497 | Los Angeles | 13.9 | 76.2 | 9.9 | 77.9 | 6.7 | 2 | 0.2 | 12.7 | 0.6 |
| 6019005204 | 44.37 | 82.14 | 80-85% | 4105 | Fresno | 16.6 | 73.1 | 10.3 | 44.3 | 31.6 | 6.1 | 1 | 13.8 | 3.1 |
| 6001403300 | 44.37 | 82.13 | 80-85% | 4054 | Alameda | 7 | 80.2 | 12.8 | 6 | 25.4 | 11.2 | 0.2 | 54 | 3.2 |
| 6037535902 | 44.36 | 82.12 | 80-85% | 6519 | Los Angeles | 14.9 | 76.6 | 8.5 | 94.9 | 3.8 | 0.2 | 0.1 | 0.8 | 0.2 |
| 6065040303 | 44.36 | 82.10 | 80-85% | 3243 | Riverside | 17.4 | 75.3 | 7.3 | 71.4 | 20.4 | 2.6 | 0.2 | 4.1 | 1.4 |
| 6095250900 | 44.36 | 82.09 | 80-85% | 2798 | Solano | 14.4 | 65.4 | 20.2 | 19.1 | 20.8 | 36.2 | 0.8 | 17.8 | 5.4 |
| 6025010102 | 44.35 | 82.08 | 80-85% | 5007 | Imperial | 17.3 | 71.8 | 10.9 | 78.8 | 14.9 | 2.8 | 0.9 | 1.2 | 1.5 |
| 6019007700 | 44.34 | 82.07 | 80-85% | 5599 | Fresno | 19.4 | 72.3 | 8.3 | 69.9 | 26.1 | 1.6 | 0.5 | 0.7 | 1.3 |
| 6059074502 | 44.33 | 82.05 | 80-85% | 5674 | Orange | 17.6 | 76.5 | 5.9 | 91.7 | 2.5 | 0.2 | 0.1 | 5.2 | 0.2 |
| 6107004101 | 44.29 | 82.04 | 80-85% | 9670 | Tulare | 23.3 | 71.8 | 4.9 | 83.8 | 11.1 | 0.6 | 0.9 | 2.5 | 1.1 |
| 6101050302 | 44.28 | 82.03 | 80-85% | 6071 | Sutter | 19.1 | 72.3 | 8.6 | 55.9 | 33 | 1.6 | 1 | 5.6 | 2.9 |
| 6071009116 | 44.28 | 82.02 | 80-85% | 6717 | San Bernardino | 25.2 | 70.2 | 4.6 | 57.3 | 17.2 | 21 | 0.4 | 1.1 | 2.9 |
| 6067007001 | 44.27 | 82.00 | 80-85% | 3842 | Sacramento | 19.4 | 72.7 | 7.9 | 56.7 | 24.4 | 5.3 | 1.1 | 8.8 | 3.7 |
| 6073011601 | 44.26 | 81.99 | 80-85% | 5891 | San Diego | 16.7 | 77.1 | 6.2 | 82.5 | 4.9 | 2.2 | 0.3 | 9.1 | 1 |
| 6071001808 | 44.25 | 81.98 | 80-85% | 4413 | San Bernardino | 14.1 | 80.8 | 5.1 | 63 | 23.7 | 8 | 0.1 | 3.6 | 1.5 |
| 6115040100 | 44.25 | 81.96 | 80-85% | 4615 | Yuba | 11.9 | 77.9 | 10.2 | 26.1 | 57.8 | 4.6 | 2.3 | 5 | 4.2 |
| 6037235201 | 44.25 | 81.95 | 80-85% | 2781 | Los Angeles | 12.9 | 73.8 | 13.3 | 31.1 | 1.2 | 63.2 | 0.4 | 0.5 | 3.7 |
| 6047000504 | 44.24 | 81.94 | 80-85% | 6129 | Merced | 21.6 | 72.3 | 6.1 | 73.4 | 19.1 | 1.2 | 0.2 | 4.7 | 1.4 |
| 6037601802 | 44.23 | 81.93 | 80-85% | 4658 | Los Angeles | 18 | 77 | 5 | 94.8 | 2.1 | 1.7 | 0.1 | 0.8 | 0.5 |
| 6037551700 | 44.20 | 81.91 | 80-85% | 6547 | Los Angeles | 15.6 | 76.1 | 8.3 | 79.1 | 11.4 | 4.1 | 0.2 | 3.9 | 1.2 |
| 6075061200 | 44.19 | 81.90 | 80-85% | 4089 | San Francisco | 12.5 | 77 | 10.5 | 36.7 | 7.6 | 31.3 | 0.4 | 21.4 | 2.5 |
| 6037296901 | 44.19 | 81.89 | 80-85% | 4127 | Los Angeles | 14.8 | 77.7 | 7.5 | 60.4 | 24.4 | 6.4 | 0.3 | 5.1 | 3.4 |
| 6037550800 | 44.19 | 81.88 | 80-85% | 7170 | Los Angeles | 12.1 | 75.2 | 12.7 | 67.9 | 23.7 | 2.2 | 0.2 | 5.2 | 0.9 |
| 6071002803 | 44.19 | 81.86 | 80-85% | 3982 | San Bernardino | 20.8 | 74.4 | 4.8 | 82.3 | 9 | 6.5 | 0.1 | 1.4 | 0.8 |
| 6037500500 | 44.18 | 81.85 | 80-85% | 2950 | Los Angeles | 13.2 | 73.1 | 13.7 | 89 | 5.6 | 0.9 | 0.1 | 4.3 | 0.2 |
| 6037115403 | 44.18 | 81.84 | 80-85% | 3188 | Los Angeles | 14.6 | 77.7 | 7.7 | 57.4 | 21.6 | 4 | 0.1 | 14.8 | 2.2 |
| 6099003400 | 44.18 | 81.83 | 80-85% | 1601 | Stanislaus | 13.4 | 73.5 | 13.1 | 60.3 | 37.3 | 0.9 | 0.4 | 0.5 | 0.6 |
| 6029002813 | 44.17 | 81.81 | 80-85% | 4161 | Kern | 16.7 | 75.2 | 8.1 | 44.1 | 32.4 | 14.6 | 0.3 | 5.9 | 2.7 |
| 6037128220 | 44.17 | 81.80 | 80-85% | 3011 | Los Angeles | 12.5 | 79.3 | 8.2 | 44.5 | 44.9 | 4.1 | 0.1 | 4.5 | 1.8 |
| 6037139303 | 44.17 | 81.79 | 80-85% | 4186 | Los Angeles | 10.8 | 76.4 | 12.8 | 26.8 | 53.8 | 6.5 | 0.4 | 7.3 | 5.4 |
| 6059011403 | 44.16 | 81.78 | 80-85% | 5565 | Orange | 13.3 | 76.6 | 10.1 | 47.9 | 38.6 | 1.9 | 0.3 | 9.1 | 2.2 |
| 6031000300 | 44.16 | 81.76 | 80-85% | 7446 | Kings | 25.1 | 74.7 | 0.2 | 19.5 | 56.8 | 9 | 0.6 | 7.9 | 6.3 |
| 6029002700 | 44.15 | 81.75 | 80-85% | 5370 | Kern | 17.3 | 74 | 8.7 | 59.3 | 30.5 | 5.2 | 0.7 | 1.9 | 2.3 |
| 6037209810 | 44.13 | 81.74 | 80-85% | 2472 | Los Angeles | 12.2 | 70.5 | 17.3 | 71.9 | 7.4 | 8.5 | 0.1 | 11.2 | 0.8 |

| | | | | | | | | | | | | | | |
|---|---|---|---|---|---|---|---|---|---|---|---|---|---|---|
| 6037572201 | 44.11 | 81.73 | 80-85% | 6197 | Los Angeles | 11.2 | 73 | 15.8 | 30.5 | 17.6 | 16.9 | 0.2 | 31.3 | 3.5 |
| 6077004403 | 44.11 | 81.71 | 80-85% | 4230 | San Joaquin | 22.3 | 72.6 | 5.1 | 68.8 | 15.1 | 0.4 | 0.2 | 14.2 | 1.3 |
| 6037209104 | 44.10 | 81.70 | 80-85% | 2434 | Los Angeles | 16.1 | 77.9 | 6 | 84.6 | 4.6 | 4.7 | 0.1 | 5.1 | 0.9 |
| 6081612000 | 44.09 | 81.69 | 80-85% | 7327 | San Mateo | 17.8 | 76.2 | 6 | 72.8 | 3.2 | 13 | 0.1 | 9 | 2 |
| 6099003002 | 44.08 | 81.67 | 80-85% | 6818 | Stanislaus | 17.7 | 73.3 | 9 | 56.4 | 36.9 | 0.8 | 0.5 | 3.3 | 2 |
| 6025010300 | 44.08 | 81.66 | 80-85% | 933 | Imperial | 10.8 | 73.7 | 15.5 | 55.4 | 42.1 | 0.2 | 0.6 | 1.2 | 0.4 |
| 6065045706 | 44.08 | 81.65 | 80-85% | 4821 | Riverside | 21.8 | 72.4 | 5.8 | 98.4 | 0.9 | 0.3 | 0 | 0.2 | 0.1 |
| 6059088101 | 44.07 | 81.64 | 80-85% | 2078 | Orange | 14 | 78.6 | 7.4 | 40.4 | 38.1 | 2 | 0.3 | 16.5 | 2.7 |
| 6099001300 | 44.07 | 81.62 | 80-85% | 5778 | Stanislaus | 11.6 | 73.6 | 14.8 | 18.2 | 74.3 | 1.8 | 0.6 | 2.3 | 2.7 |
| 6037208902 | 44.05 | 81.61 | 80-85% | 2339 | Los Angeles | 16.5 | 78 | 5.5 | 91.3 | 2.9 | 0.7 | 0.3 | 4.3 | 0.6 |
| 6037405203 | 44.04 | 81.60 | 80-85% | 3484 | Los Angeles | 14.7 | 75.9 | 9.4 | 70 | 6.4 | 1 | 0.3 | 21.4 | 0.9 |
| 6037208401 | 44.01 | 81.59 | 80-85% | 3770 | Los Angeles | 17.1 | 71.8 | 11.1 | 78.8 | 3.5 | 1.6 | 0.1 | 15.3 | 0.8 |
| 6037131701 | 43.97 | 81.57 | 80-85% | 4541 | Los Angeles | 12.5 | 77.7 | 9.8 | 38.1 | 30.8 | 6.6 | 0.2 | 21.1 | 3.3 |
| 6037131010 | 43.96 | 81.56 | 80-85% | 6409 | Los Angeles | 14.6 | 78.2 | 7.2 | 55.7 | 21.2 | 4.2 | 0.1 | 15.4 | 3.3 |
| 6001402500 | 43.96 | 81.55 | 80-85% | 1784 | Alameda | 19.5 | 74.2 | 6.3 | 4.5 | 8.1 | 66.8 | 0.4 | 16.5 | 3.6 |
| 6047002500 | 43.95 | 81.54 | 80-85% | 2328 | Merced | 13.2 | 73.4 | 13.4 | 33 | 58.1 | 0.6 | 0.9 | 6.1 | 1.4 |
| 6037234800 | 43.95 | 81.52 | 80-85% | 3426 | Los Angeles | 13.5 | 74.4 | 12.1 | 42.5 | 1.3 | 52.8 | 0.1 | 0.5 | 2.9 |
| 6037221602 | 43.94 | 81.51 | 80-85% | 2816 | Los Angeles | 16.1 | 76.8 | 7.1 | 90.5 | 1.7 | 4.1 | 0 | 2.9 | 0.7 |
| 6107003700 | 43.94 | 81.50 | 80-85% | 5931 | Tulare | 19.1 | 70.7 | 10.2 | 58.8 | 34.1 | 0.7 | 1 | 2.9 | 2.4 |
| 6019007802 | 43.94 | 81.49 | 80-85% | 5269 | Fresno | 22.6 | 73.1 | 4.3 | 96.2 | 1.9 | 0.6 | 0.2 | 0.3 | 0.9 |
| 6037106510 | 43.94 | 81.47 | 80-85% | 5108 | Los Angeles | 13.2 | 79.4 | 7.4 | 63.8 | 20.1 | 6.8 | 0.3 | 7.4 | 1.6 |
| 6067006201 | 43.92 | 81.46 | 80-85% | 6290 | Sacramento | 15.3 | 73.6 | 11.1 | 27.7 | 47.6 | 14 | 0.8 | 5 | 4.8 |
| 6037124203 | 43.91 | 81.45 | 80-85% | 2748 | Los Angeles | 14.5 | 79.7 | 5.8 | 75.7 | 16.2 | 2.4 | 0.4 | 3.8 | 1.5 |
| 6013368001 | 43.89 | 81.44 | 80-85% | 5327 | Contra Costa | 18 | 76.8 | 5.2 | 78.4 | 5.6 | 8.1 | 0.2 | 6.6 | 1 |
| 6077005305 | 43.89 | 81.42 | 80-85% | 6495 | San Joaquin | 15.1 | 74.1 | 10.8 | 42.7 | 37.3 | 6.4 | 0.3 | 9.5 | 3.8 |
| 6037104108 | 43.88 | 81.41 | 80-85% | 5256 | Los Angeles | 17.2 | 74.4 | 8.4 | 79.3 | 4.8 | 11.1 | 0.1 | 3.5 | 1.2 |
| 6037530901 | 43.88 | 81.40 | 80-85% | 4080 | Los Angeles | 19.1 | 73.8 | 7.1 | 98.6 | 0.4 | 0.1 | 0 | 0.5 | 0.4 |
| 6037127805 | 43.88 | 81.38 | 80-85% | 3768 | Los Angeles | 12.3 | 71.9 | 15.8 | 60.4 | 27.7 | 4.3 | 0.2 | 6 | 1.5 |
| 6029000507 | 43.88 | 81.37 | 80-85% | 3598 | Kern | 14.9 | 72.1 | 13 | 23.3 | 69.1 | 1.3 | 1.1 | 3.7 | 1.6 |
| 6037190201 | 43.87 | 81.36 | 80-85% | 2870 | Los Angeles | 5 | 83.9 | 11.1 | 34.4 | 47.9 | 9 | 0.6 | 5.4 | 2.7 |
| 6065042519 | 43.85 | 81.35 | 80-85% | 1706 | Riverside | 18.9 | 75.4 | 5.7 | 63.7 | 11.1 | 18.9 | 0.4 | 3.5 | 2.5 |
| 6067006202 | 43.84 | 81.33 | 80-85% | 3599 | Sacramento | 14.8 | 75.1 | 10.1 | 33.2 | 41.7 | 14 | 0.7 | 6.4 | 4 |
| 6059087805 | 43.83 | 81.32 | 80-85% | 6952 | Orange | 16.6 | 76.4 | 7 | 59.1 | 18.4 | 3.2 | 0.1 | 17.6 | 1.6 |
| 6037553100 | 43.81 | 81.31 | 80-85% | 6298 | Los Angeles | 13.7 | 76.2 | 10.1 | 44.6 | 24.3 | 15.2 | 0.3 | 12.6 | 2.9 |
| 6059074004 | 43.80 | 81.30 | 80-85% | 7444 | Orange | 13.1 | 78.9 | 8 | 58.6 | 19.5 | 2.5 | 0.1 | 17.1 | 2.2 |
| 6037185202 | 43.79 | 81.28 | 80-85% | 3712 | Los Angeles | 12.4 | 77.1 | 10.5 | 64 | 23.9 | 3 | 0.2 | 6.8 | 2 |
| 6071009800 | 43.79 | 81.27 | 80-85% | 5017 | San Bernardino | 19.5 | 72.8 | 7.7 | 63.1 | 20.4 | 11.3 | 0.8 | 1.7 | 2.7 |
| 6037531800 | 43.79 | 81.26 | 80-85% | 5066 | Los Angeles | 16.7 | 75.9 | 7.4 | 96.8 | 2.3 | 0.2 | 0.2 | 0.3 | 0.1 |
| 6037301801 | 43.77 | 81.25 | 80-85% | 4079 | Los Angeles | 9.3 | 75.7 | 15 | 18.9 | 52 | 2.4 | 0.2 | 21.6 | 4.9 |
| 6071002105 | 43.76 | 81.23 | 80-85% | 5036 | San Bernardino | 13.9 | 75.1 | 11 | 50.1 | 32.2 | 7 | 0.1 | 8.7 | 1.9 |
| 6107001602 | 43.76 | 81.22 | 80-85% | 5745 | Tulare | 17.6 | 74 | 8.4 | 72.1 | 24.2 | 0.2 | 1 | 1 | 1.5 |
| 6065040301 | 43.76 | 81.21 | 80-85% | 7857 | Riverside | 17.3 | 72.5 | 10.2 | 75.5 | 18.1 | 3.3 | 0.5 | 1.6 | 1 |
| 6047001503 | 43.76 | 81.20 | 80-85% | 4438 | Merced | 22.6 | 70 | 7.4 | 75.8 | 5.9 | 5.2 | 0.2 | 11.9 | 1 |
| 6037555211 | 43.76 | 81.18 | 80-85% | 5818 | Los Angeles | 17.1 | 75.7 | 7.2 | 89 | 4.4 | 0.8 | 0.4 | 5 | 0.3 |
| 6001410500 | 43.75 | 81.17 | 80-85% | 2193 | Alameda | 15.8 | 76.4 | 7.8 | 9.1 | 7.1 | 62 | 0 | 17.1 | 4.7 |
| 6001432501 | 43.73 | 81.16 | 80-85% | 4839 | Alameda | 13.3 | 74.4 | 12.3 | 36.4 | 19.9 | 5.7 | 0.3 | 35 | 2.6 |
| 6111003201 | 43.71 | 81.15 | 80-85% | 4577 | Ventura | 20 | 74.5 | 5.5 | 97.1 | 1.8 | 0.7 | 0.1 | 0 | 0.3 |
| 6037117405 | 43.70 | 81.13 | 80-85% | 3442 | Los Angeles | 23.1 | 74.9 | 2 | 90.6 | 3.3 | 3.6 | 0.1 | 1.6 | 0.8 |
| 6113010204 | 43.69 | 81.12 | 80-85% | 4922 | Yolo | 13.1 | 69.5 | 17.4 | 35.2 | 51.1 | 2.2 | 1.6 | 5.4 | 4.4 |
| 6037106604 | 43.68 | 81.11 | 80-85% | 5020 | Los Angeles | 16.6 | 75.2 | 8.2 | 85.4 | 8 | 2.1 | 0.4 | 3.6 | 0.5 |
| 6107004500 | 43.66 | 81.09 | 80-85% | 6628 | Tulare | 19.1 | 72 | 8.9 | 72.7 | 23.9 | 0.2 | 0.5 | 1.8 | 0.8 |
| 6037533104 | 43.65 | 81.08 | 80-85% | 4356 | Los Angeles | 19.2 | 72.7 | 8.1 | 97.9 | 1.1 | 0.6 | 0 | 0.3 | 0.2 |
| 6037134520 | 43.63 | 81.07 | 80-85% | 5453 | Los Angeles | 16.2 | 76.5 | 7.3 | 72.8 | 14.6 | 2.8 | 0.2 | 7.7 | 2 |
| 6037600302 | 43.61 | 81.06 | 80-85% | 3317 | Los Angeles | 11.7 | 73.7 | 14.6 | 27.1 | 0.8 | 69.2 | 0.2 | 0.3 | 2.4 |
| 6071006604 | 43.60 | 81.04 | 80-85% | 4278 | San Bernardino | 18.6 | 73.3 | 8.1 | 84.8 | 5.6 | 5.8 | 0.1 | 2.9 | 0.8 |
| 6029003114 | 43.60 | 81.03 | 80-85% | 7654 | Kern | 17 | 75.2 | 7.8 | 47.4 | 37.5 | 8.5 | 0.5 | 4 | 2 |
| 6037531202 | 43.60 | 81.02 | 80-85% | 4747 | Los Angeles | 17.9 | 75.9 | 6.2 | 99 | 0.5 | 0.1 | 0 | 0.2 | 0.1 |
| 6037554101 | 43.60 | 81.01 | 80-85% | 3799 | Los Angeles | 18 | 77.9 | 4.1 | 69.6 | 11.2 | 9.1 | 0.3 | 8.3 | 1.5 |
| 6071001704 | 43.59 | 80.99 | 80-85% | 5056 | San Bernardino | 13.9 | 79.3 | 6.8 | 65.8 | 19.3 | 5.9 | 0.2 | 7.1 | 1.7 |
| 6037540101 | 43.57 | 80.98 | 80-85% | 6483 | Los Angeles | 15.8 | 77.5 | 6.7 | 89.4 | 1.9 | 7.5 | 0.2 | 0.7 | 0.3 |
| 6037293202 | 43.57 | 80.97 | 80-85% | 6742 | Los Angeles | 17.5 | 77.6 | 4.9 | 69.7 | 6.7 | 6.3 | 0.2 | 15.2 | 1.9 |
| 6099003908 | 43.56 | 80.96 | 80-85% | 2226 | Stanislaus | 15.4 | 70.4 | 14.2 | 40.1 | 50.9 | 1.8 | 0.3 | 2.7 | 4.3 |
| 6053000900 | 43.56 | 80.94 | 80-85% | 5746 | Monterey | 20.7 | 73.5 | 5.8 | 93.1 | 3.9 | 0.5 | 0.1 | 1.6 | 0.8 |
| 6065043405 | 43.56 | 80.93 | 80-85% | 4217 | Riverside | 13.6 | 59.4 | 27 | 37.4 | 51.1 | 6.7 | 1.1 | 1.4 | 2.4 |
| 6085501102 | 43.54 | 80.92 | 80-85% | 4477 | Santa Clara | 13.4 | 76.4 | 10.2 | 64.6 | 20 | 2.1 | 0.2 | 11.1 | 2 |
| 6037208610 | 43.54 | 80.91 | 80-85% | 4195 | Los Angeles | 11.7 | 79.5 | 8.8 | 47.2 | 3.8 | 3.2 | 0.2 | 43.6 | 2 |

| | | | | | | | | | | | | | | |
|---|---|---|---|---|---|---|---|---|---|---|---|---|---|---|
| 6081602300 | 43.53 | 80.89 | 80-85% | 3753 | San Mateo | 12.5 | 77.1 | 10.4 | 45.4 | 19.5 | 1.5 | 0.2 | 30.3 | 3.2 |
| 6071000208 | 43.53 | 80.88 | 80-85% | 4124 | San Bernardino | 14.1 | 75.6 | 10.3 | 71.5 | 18.6 | 3.4 | 0.2 | 5.1 | 1.2 |
| 6047000901 | 43.51 | 80.87 | 80-85% | 3970 | Merced | 14.9 | 77.4 | 7.7 | 53.2 | 39.9 | 3 | 0.2 | 2 | 1.7 |
| 6037530203 | 43.48 | 80.86 | 80-85% | 3238 | Los Angeles | 12.8 | 76.3 | 10.9 | 79.7 | 7.2 | 0.4 | 0.3 | 11.5 | 0.8 |
| 6013358000 | 43.46 | 80.84 | 80-85% | 5298 | Contra Costa | 14.2 | 74.7 | 11.1 | 24.6 | 39.8 | 17 | 0.4 | 13 | 5.2 |
| 6037191901 | 43.44 | 80.83 | 80-85% | 3355 | Los Angeles | 5.4 | 88.6 | 6 | 26.5 | 53.2 | 6.7 | 0.2 | 9.4 | 4 |
| 6047000203 | 43.44 | 80.82 | 80-85% | 9272 | Merced | 19.4 | 74.9 | 5.7 | 72.4 | 20.6 | 0.9 | 0.3 | 4.4 | 1.4 |
| 6037554405 | 43.44 | 80.80 | 80-85% | 3040 | Los Angeles | 13.2 | 74.7 | 12.1 | 36 | 23.2 | 22.3 | 0.7 | 16.2 | 1.6 |
| 6029001102 | 43.42 | 80.79 | 80-85% | 6682 | Kern | 21.5 | 72.2 | 6.3 | 83.9 | 11.4 | 2.8 | 0.6 | 0.5 | 0.9 |
| 6037197600 | 43.42 | 80.78 | 80-85% | 2376 | Los Angeles | 11.1 | 80.5 | 8.4 | 55 | 20.4 | 2 | 0.2 | 21 | 1.4 |
| 6037533106 | 43.42 | 80.77 | 80-85% | 1743 | Los Angeles | 16.7 | 75.9 | 7.4 | 96.8 | 2.2 | 0.1 | 0 | 0.8 | 0 |
| 6037119002 | 43.41 | 80.75 | 80-85% | 7210 | Los Angeles | 14.2 | 77.3 | 8.5 | 86.5 | 5.3 | 0.5 | 0.1 | 6.8 | 0.8 |
| 6059011502 | 43.40 | 80.74 | 80-85% | 4101 | Orange | 11.8 | 80.2 | 8 | 45 | 35.5 | 1.9 | 0.2 | 15.3 | 2.2 |
| 6037555102 | 43.40 | 80.73 | 80-85% | 6526 | Los Angeles | 14.4 | 77.1 | 8.5 | 49 | 9.9 | 10.3 | 0.3 | 28.4 | 2.1 |
| 6071002804 | 43.40 | 80.72 | 80-85% | 5417 | San Bernardino | 24.8 | 72.5 | 2.7 | 85.5 | 4.2 | 8.3 | 0.1 | 1 | 0.8 |
| 6059110603 | 43.39 | 80.70 | 80-85% | 8540 | Orange | 15.8 | 79 | 5.2 | 57.4 | 12.9 | 4.4 | 0.2 | 23.9 | 1.2 |
| 6071001806 | 43.39 | 80.69 | 80-85% | 4760 | San Bernardino | 13.3 | 80.4 | 6.3 | 59.4 | 24.6 | 7 | 0.2 | 7.8 | 1.1 |
| 6071012002 | 43.38 | 80.68 | 80-85% | 5366 | San Bernardino | 16.9 | 70.4 | 12.7 | 45.8 | 33.8 | 11.9 | 1.4 | 3.9 | 3.2 |
| 6013381000 | 43.38 | 80.67 | 80-85% | 6097 | Contra Costa | 16.2 | 74.3 | 9.5 | 42.6 | 4.8 | 44.1 | 0.3 | 5 | 3.2 |
| 6037603500 | 43.37 | 80.65 | 80-85% | 3074 | Los Angeles | 11.2 | 76.1 | 12.7 | 40.8 | 19.4 | 10.3 | 0.4 | 26.2 | 3 |
| 6037534403 | 43.37 | 80.64 | 80-85% | 2948 | Los Angeles | 16.4 | 77.6 | 6 | 96.5 | 2.5 | 0.2 | 0.1 | 0.4 | 0.2 |
| 6077003409 | 43.36 | 80.63 | 80-85% | 4450 | San Joaquin | 15.6 | 77.4 | 7 | 33.2 | 12.7 | 10.9 | 0.2 | 39.5 | 3.6 |
| 6037576001 | 43.36 | 80.62 | 80-85% | 4969 | Los Angeles | 4.1 | 85.4 | 10.5 | 18.4 | 48.3 | 13 | 0.4 | 15.4 | 4.6 |
| 6007003700 | 43.36 | 80.60 | 80-85% | 4505 | Butte | 12.9 | 71.5 | 15.6 | 11.1 | 67.9 | 0.9 | 4 | 12.4 | 3.7 |
| 6067009316 | 43.36 | 80.59 | 80-85% | 4605 | Sacramento | 15.5 | 78 | 6.5 | 19.6 | 22 | 14 | 0.2 | 38.8 | 5.3 |
| 6073003403 | 43.34 | 80.58 | 80-85% | 4283 | San Diego | 17.7 | 75.1 | 7.2 | 75.3 | 3.5 | 11.3 | 0.2 | 8.3 | 1.5 |
| 6107003902 | 43.32 | 80.57 | 80-85% | 5847 | Tulare | 19.7 | 70.9 | 9.4 | 60 | 34.2 | 0.5 | 0.9 | 3 | 1.5 |
| 6059086501 | 43.32 | 80.55 | 80-85% | 4848 | Orange | 16.7 | 77.4 | 5.9 | 83.7 | 12.4 | 0.6 | 0.1 | 2 | 1.2 |
| 6037128102 | 43.31 | 80.54 | 80-85% | 4795 | Los Angeles | 14.7 | 80 | 5.3 | 68.1 | 18.2 | 5.8 | 0.2 | 6.1 | 1.6 |
| 6071000901 | 43.31 | 80.53 | 80-85% | 4600 | San Bernardino | 12 | 71.9 | 16.1 | 47 | 38.8 | 6 | 0.3 | 5.5 | 2.4 |
| 6037294520 | 43.31 | 80.51 | 80-85% | 3564 | Los Angeles | 19 | 75.8 | 5.2 | 94.7 | 2.7 | 1 | 0.2 | 1.1 | 0.3 |
| 6059063605 | 43.30 | 80.50 | 80-85% | 5672 | Orange | 18.3 | 77.8 | 3.9 | 75.4 | 19.7 | 1 | 0.2 | 1.9 | 1.9 |
| 6099001200 | 43.28 | 80.49 | 80-85% | 3623 | Stanislaus | 13.3 | 78.1 | 8.6 | 23.4 | 66.8 | 2.7 | 0.7 | 1.9 | 4.4 |
| 6037543502 | 43.27 | 80.48 | 80-85% | 4560 | Los Angeles | 13 | 76.5 | 10.5 | 50.1 | 18.9 | 3.6 | 0.4 | 23.8 | 3.2 |
| 6037132700 | 43.24 | 80.46 | 80-85% | 4912 | Los Angeles | 14.2 | 76.7 | 9.1 | 60 | 29.1 | 2.6 | 0.1 | 6 | 2.1 |
| 6001438203 | 43.22 | 80.45 | 80-85% | 3920 | Alameda | 10.1 | 74.7 | 15.2 | 25 | 18.9 | 6.5 | 0.3 | 44.6 | 4.8 |
| 6037191203 | 43.21 | 80.44 | 80-85% | 2922 | Los Angeles | 9.2 | 79.2 | 11.6 | 45.1 | 27.4 | 4.4 | 0.2 | 20.6 | 2.2 |
| 6019006300 | 43.21 | 80.43 | 80-85% | 7254 | Fresno | 14.8 | 72.9 | 12.3 | 54.3 | 38.8 | 0.4 | 0.8 | 3.7 | 1.8 |
| 6037461600 | 43.20 | 80.41 | 80-85% | 5826 | Los Angeles | 15.5 | 75.6 | 8.9 | 59.9 | 8.2 | 22 | 0.2 | 7.9 | 1.8 |
| 6037573402 | 43.19 | 80.40 | 80-85% | 6430 | Los Angeles | 14.9 | 77.7 | 7.4 | 36.2 | 25.2 | 14 | 0.2 | 20.4 | 3.9 |
| 6071002107 | 43.19 | 80.39 | 80-85% | 4970 | San Bernardino | 13.8 | 79.9 | 6.3 | 52.5 | 30.2 | 8.7 | 0.3 | 5.9 | 2.4 |
| 6037117303 | 43.19 | 80.38 | 80-85% | 3512 | Los Angeles | 11 | 75.7 | 13.3 | 39.2 | 39.8 | 3 | 0.1 | 16 | 1.8 |
| 6065042404 | 43.18 | 80.36 | 80-85% | 2038 | Riverside | 17 | 76.1 | 6.9 | 57.7 | 16.9 | 18 | 0.1 | 3.8 | 3.5 |
| 6019007202 | 43.18 | 80.35 | 80-85% | 5109 | Fresno | 17.2 | 70.4 | 12.4 | 55.5 | 39.7 | 0.5 | 0.5 | 2 | 2 |
| 6029001000 | 43.17 | 80.34 | 80-85% | 9186 | Kern | 19.6 | 73.7 | 6.7 | 67.2 | 27.9 | 1.2 | 0.9 | 1.3 | 1.4 |
| 6065031701 | 43.17 | 80.33 | 80-85% | 2943 | Riverside | 14.6 | 74 | 11.4 | 52.7 | 32.5 | 7.5 | 0.1 | 5.4 | 1.8 |
| 6059086406 | 43.16 | 80.31 | 80-85% | 4330 | Orange | 15.9 | 76.3 | 7.8 | 59.5 | 25.1 | 1.8 | 0.3 | 11.4 | 1.9 |
| 6029001700 | 43.16 | 80.30 | 80-85% | 4287 | Kern | 12.5 | 74.4 | 13.1 | 24.4 | 66.4 | 3.6 | 0.7 | 1.9 | 3 |
| 6037601212 | 43.15 | 80.29 | 80-85% | 6511 | Los Angeles | 16.3 | 78.2 | 5.5 | 66.5 | 2.6 | 28.6 | 0.2 | 0.9 | 1.2 |
| 6067009008 | 43.14 | 80.27 | 80-85% | 4928 | Sacramento | 16.5 | 73.8 | 9.7 | 26.5 | 50.7 | 9.2 | 0.8 | 8 | 4.8 |
| 6037554404 | 43.13 | 80.26 | 80-85% | 4447 | Los Angeles | 15.2 | 78.4 | 6.4 | 49.1 | 17.7 | 16.5 | 0.3 | 13.4 | 2.9 |
| 6065043006 | 43.11 | 80.25 | 80-85% | 4703 | Riverside | 17.7 | 76.1 | 6.2 | 63 | 27.3 | 4.6 | 0.7 | 2.5 | 2 |
| 6019002906 | 43.05 | 80.24 | 80-85% | 5520 | Fresno | 19.8 | 72.7 | 7.5 | 51.2 | 15.1 | 7 | 0.5 | 24.6 | 1.5 |
| 6029001500 | 43.04 | 80.22 | 80-85% | 3147 | Kern | 18.6 | 73.6 | 7.8 | 74.9 | 12.3 | 10.5 | 0.5 | 0.7 | 1 |
| 6081610201 | 42.97 | 80.21 | 80-85% | 5764 | San Mateo | 17.8 | 74.5 | 7.7 | 74.4 | 12.1 | 2.5 | 0.4 | 8.3 | 2.2 |
| 6059087404 | 42.95 | 80.20 | 80-85% | 3591 | Orange | 19.6 | 76.7 | 3.7 | 89.1 | 6.2 | 0.7 | 0.3 | 3 | 0.8 |
| 6037302506 | 42.95 | 80.19 | 80-85% | 3534 | Los Angeles | 9.9 | 75 | 15.1 | 29.3 | 53.9 | 2.2 | 0 | 11.1 | 3.5 |
| 6059001801 | 42.93 | 80.17 | 80-85% | 5544 | Orange | 17.8 | 76.5 | 5.7 | 58.7 | 20.6 | 4.3 | 0.3 | 14.3 | 1.8 |
| 6037191204 | 42.93 | 80.16 | 80-85% | 2124 | Los Angeles | 10.1 | 77.8 | 12.1 | 45.9 | 33 | 2.4 | 0.1 | 16.3 | 2.3 |
| 6037408302 | 42.93 | 80.15 | 80-85% | 4036 | Los Angeles | 15.1 | 73 | 11.9 | 79.4 | 8.9 | 0.6 | 0.2 | 9.8 | 1 |
| 6037222200 | 42.92 | 80.14 | 80-85% | 3965 | Los Angeles | 12.9 | 78.8 | 8.3 | 64.9 | 5.7 | 23.6 | 0.1 | 3.5 | 2.2 |
| 6037221900 | 42.92 | 80.12 | 80-85% | 3664 | Los Angeles | 4.4 | 88.1 | 7.5 | 28.8 | 26.6 | 8.1 | 0 | 31.8 | 4.6 |
| 6059089106 | 42.92 | 80.11 | 80-85% | 3973 | Orange | 14.8 | 74.6 | 10.6 | 67.5 | 9 | 0.6 | 0.1 | 22 | 0.8 |
| 6071003804 | 42.89 | 80.10 | 80-85% | 4578 | San Bernardino | 15.3 | 74.6 | 10.1 | 59.9 | 11 | 24.3 | 0.2 | 3.1 | 1.6 |
| 6037186301 | 42.89 | 80.09 | 80-85% | 2999 | Los Angeles | 16.5 | 76.6 | 6.9 | 73.5 | 12.6 | 2.5 | 0 | 10 | 1.3 |
| 6037192520 | 42.89 | 80.07 | 80-85% | 5067 | Los Angeles | 14.1 | 79.5 | 6.4 | 75.5 | 4.8 | 1.1 | 0.1 | 17.5 | 1 |

| | | | | | | | | | | | | | | | |
|---|---|---|---|---|---|---|---|---|---|---|---|---|---|---|---|
| 6037192510 | 42.89 | 80.06 | 80-85% | 3670 | Los Angeles | 12.2 | 78.3 | 9.5 | 50.4 | 4.8 | 1 | 0.2 | 42.4 | 1.2 |
| 6029006304 | 42.89 | 80.05 | 80-85% | 3895 | Kern | 20.5 | 73.5 | 6 | 92 | 6.4 | 0.3 | 0.2 | 0.6 | 0.5 |
| 6059074200 | 42.88 | 80.04 | 80-85% | 9450 | Orange | 17.6 | 77.4 | 5 | 95.2 | 2.8 | 0.1 | 0.1 | 1.4 | 0.4 |
| 6085503602 | 42.87 | 80.02 | 80-85% | 4741 | Santa Clara | 17.5 | 72.3 | 10.2 | 59.6 | 7.7 | 2.6 | 0.1 | 28.6 | 1.5 |
| 6037552900 | 42.86 | 80.01 | 80-85% | 6881 | Los Angeles | 14.2 | 76.1 | 9.7 | 61 | 14.6 | 5 | 0.2 | 17.3 | 1.9 |
| 6065031002 | 42.86 | 80.00 | 75-80% | 4559 | Riverside | 17.9 | 75.5 | 6.6 | 70.3 | 21.5 | 4.1 | 0.2 | 2.5 | 1.4 |
| 6085501401 | 42.85 | 79.98 | 75-80% | 3295 | Santa Clara | 19.5 | 73.5 | 7 | 75.5 | 10.6 | 2.7 | 0.4 | 9.3 | 1.6 |
| 6077005130 | 42.85 | 79.97 | 75-80% | 3186 | San Joaquin | 16 | 76.8 | 7.2 | 54.4 | 31.3 | 2.8 | 0.8 | 8.7 | 2 |
| 6029003400 | 42.85 | 79.96 | 75-80% | 4318 | Kern | 18.2 | 73.5 | 8.3 | 45.8 | 50.3 | 0.3 | 0.3 | 1.4 | 1.8 |
| 6075017801 | 42.84 | 79.95 | 75-80% | 3499 | San Francisco | 1.8 | 40.6 | 57.6 | 4 | 25.6 | 3.2 | 0.1 | 64.6 | 2.5 |
| 6029003206 | 42.83 | 79.93 | 75-80% | 12112 | Kern | 19.8 | 75.3 | 4.9 | 53.2 | 24.1 | 6.2 | 0.2 | 14 | 2.3 |
| 6077003601 | 42.82 | 79.92 | 75-80% | 3453 | San Joaquin | 10.7 | 69.5 | 19.8 | 31.5 | 59.5 | 0.9 | 0.8 | 5 | 2.2 |
| 6037404902 | 42.80 | 79.91 | 75-80% | 3973 | Los Angeles | 15 | 76.6 | 8.4 | 71.9 | 5.2 | 0.4 | 0.1 | 22 | 0.6 |
| 6029002815 | 42.79 | 79.90 | 75-80% | 4282 | Kern | 19.3 | 72.9 | 7.8 | 46 | 31.9 | 15 | 0.7 | 3.6 | 2.8 |
| 6065042706 | 42.77 | 79.88 | 75-80% | 8393 | Riverside | 20.2 | 76 | 3.8 | 74.2 | 7.4 | 12.9 | 0.3 | 2.9 | 2.3 |
| 6001402400 | 42.77 | 79.87 | 75-80% | 2351 | Alameda | 12.1 | 71.4 | 16.5 | 9.4 | 12.6 | 57.8 | 0.5 | 14.2 | 5.5 |
| 6085512310 | 42.75 | 79.86 | 75-80% | 3791 | Santa Clara | 18.1 | 74.3 | 7.6 | 48.7 | 32.9 | 2.3 | 0.3 | 12.5 | 3.3 |
| 6037601303 | 42.74 | 79.85 | 75-80% | 4879 | Los Angeles | 14.3 | 77.8 | 7.9 | 34.3 | 2.6 | 58.5 | 0.4 | 1.5 | 2.7 |
| 6019005804 | 42.73 | 79.83 | 75-80% | 6626 | Fresno | 15.2 | 76.3 | 8.5 | 35.9 | 44.7 | 2.7 | 0.8 | 13.4 | 2.5 |
| 6071002602 | 42.71 | 79.82 | 75-80% | 7639 | San Bernardino | 16.9 | 79.2 | 3.9 | 76 | 11.2 | 7.2 | 0.3 | 4 | 1.3 |
| 6037554001 | 42.70 | 79.81 | 75-80% | 4171 | Los Angeles | 13.8 | 77.4 | 8.8 | 56 | 23.5 | 6 | 0.2 | 12.3 | 1.9 |
| 6111004704 | 42.68 | 79.80 | 75-80% | 1469 | Ventura | 17.5 | 74.5 | 8 | 82.3 | 13.7 | 1.2 | 0.1 | 1.3 | 1.4 |
| 6037134720 | 42.68 | 79.78 | 75-80% | 4594 | Los Angeles | 12.8 | 78.8 | 8.4 | 45 | 27.8 | 6.3 | 0.1 | 17.5 | 3.4 |
| 6067006300 | 42.68 | 79.77 | 75-80% | 4592 | Sacramento | 14.7 | 77 | 8.3 | 33.6 | 43.4 | 8.8 | 1.2 | 8.5 | 4.3 |
| 6099002006 | 42.67 | 79.76 | 75-80% | 4458 | Stanislaus | 13.7 | 80.8 | 5.5 | 38.9 | 41.6 | 4.6 | 0.6 | 10.3 | 3.9 |
| 6037602506 | 42.65 | 79.75 | 75-80% | 4329 | Los Angeles | 15.4 | 80.3 | 4.3 | 35.9 | 4.4 | 49.2 | 0.1 | 7.9 | 2.4 |
| 6113010101 | 42.65 | 79.73 | 75-80% | 6645 | Yolo | 14.3 | 74.4 | 11.3 | 41.3 | 38.5 | 5.8 | 1.4 | 9.3 | 3.8 |
| 6037297201 | 42.65 | 79.72 | 75-80% | 3475 | Los Angeles | 14.9 | 76.9 | 8.2 | 55.5 | 28.5 | 7.3 | 0.5 | 4.7 | 3.5 |
| 6037212203 | 42.64 | 79.71 | 75-80% | 2679 | Los Angeles | 12.8 | 74.2 | 13 | 77.6 | 2 | 2.6 | 0.1 | 17.2 | 0.6 |
| 6073011801 | 42.63 | 79.69 | 75-80% | 3961 | San Diego | 14.9 | 76.9 | 8.2 | 77.3 | 8.2 | 2.2 | 0.2 | 11.1 | 1 |
| 6037221220 | 42.62 | 79.68 | 75-80% | 3378 | Los Angeles | 14.4 | 77.4 | 8.2 | 88.4 | 2.3 | 2.1 | 0.1 | 6.5 | 0.7 |
| 6071003101 | 42.62 | 79.67 | 75-80% | 5040 | San Bernardino | 19.2 | 75.4 | 5.4 | 83.3 | 9.9 | 3.4 | 0.3 | 2.2 | 1 |
| 6037120108 | 42.62 | 79.66 | 75-80% | 4838 | Los Angeles | 18 | 75.8 | 6.2 | 82.2 | 6.2 | 3.8 | 0.3 | 6.6 | 0.9 |
| 6071007407 | 42.58 | 79.64 | 75-80% | 2940 | San Bernardino | 20.8 | 74.6 | 4.6 | 52.4 | 12.4 | 25.6 | 1 | 6.1 | 2.4 |
| 6019003301 | 42.58 | 79.63 | 75-80% | 3507 | Fresno | 15.6 | 69.3 | 15.1 | 56.6 | 27.8 | 4.8 | 1.5 | 8.3 | 1.1 |
| 6037120103 | 42.58 | 79.62 | 75-80% | 3287 | Los Angeles | 22.5 | 75.6 | 1.9 | 91.9 | 2.3 | 2.9 | 0 | 2.3 | 0.6 |
| 6031000200 | 42.55 | 79.61 | 75-80% | 2271 | Kings | 13.4 | 74.1 | 12.5 | 34.5 | 60.9 | 1.6 | 0.4 | 1 | 1.7 |
| 6019006202 | 42.55 | 79.59 | 75-80% | 6807 | Fresno | 18.7 | 73.1 | 8.2 | 89.5 | 7.8 | 0.2 | 0.3 | 1.6 | 0.6 |
| 6071008001 | 42.55 | 79.58 | 75-80% | 6513 | San Bernardino | 14.8 | 74.5 | 10.7 | 54.2 | 25.6 | 4.7 | 0.3 | 13.2 | 2.1 |
| 6059075002 | 42.54 | 79.57 | 75-80% | 8605 | Orange | 19 | 72.1 | 8.9 | 86.1 | 6.1 | 1.3 | 0.1 | 5.9 | 0.5 |
| 6037208620 | 42.53 | 79.56 | 75-80% | 4660 | Los Angeles | 12.1 | 79.5 | 8.4 | 52.5 | 4.1 | 5.7 | 0.3 | 35.2 | 2.2 |
| 6077005133 | 42.52 | 79.54 | 75-80% | 4249 | San Joaquin | 14.5 | 75.6 | 9.9 | 46 | 45.4 | 2.3 | 0.7 | 2.7 | 3 |
| 6019005410 | 42.51 | 79.53 | 75-80% | 3298 | Fresno | 14.5 | 72.8 | 12.7 | 39.5 | 40.2 | 6.1 | 0.6 | 11.2 | 2.4 |
| 6071000603 | 42.50 | 79.52 | 75-80% | 5576 | San Bernardino | 14.9 | 77.3 | 7.8 | 60 | 27.5 | 4.2 | 0.4 | 6.2 | 1.6 |
| 6059074108 | 42.48 | 79.51 | 75-80% | 5226 | Orange | 16.6 | 76.9 | 6.5 | 88.5 | 3.8 | 0.5 | 0.1 | 6.6 | 0.6 |
| 6037576403 | 42.47 | 79.49 | 75-80% | 5033 | Los Angeles | 17.7 | 78.5 | 3.8 | 53.5 | 7.4 | 17.2 | 0.6 | 18.9 | 2.4 |
| 6037407900 | 42.46 | 79.48 | 75-80% | 6296 | Los Angeles | 13.3 | 76.9 | 9.8 | 67.7 | 7 | 3 | 0.1 | 20.9 | 1.3 |
| 6037124105 | 42.45 | 79.47 | 75-80% | 2658 | Los Angeles | 14.6 | 79.4 | 6 | 60.3 | 29.2 | 4.1 | 0.1 | 4.2 | 2.1 |
| 6037503104 | 42.43 | 79.46 | 75-80% | 2719 | Los Angeles | 18.7 | 74.6 | 6.7 | 88.6 | 7.9 | 0.1 | 0.1 | 2.3 | 1 |
| 6037117404 | 42.40 | 79.44 | 75-80% | 4279 | Los Angeles | 9.4 | 78.2 | 12.4 | 39 | 36.5 | 4.9 | 0.1 | 16.9 | 2.6 |
| 6019005203 | 42.40 | 79.43 | 75-80% | 4519 | Fresno | 17.4 | 72.6 | 10 | 51.7 | 27 | 9.3 | 0.8 | 9.3 | 1.9 |
| 6037551401 | 42.38 | 79.42 | 75-80% | 4290 | Los Angeles | 14.2 | 77 | 8.8 | 73.4 | 16 | 3.2 | 0.2 | 6.1 | 1.1 |
| 6029001201 | 42.37 | 79.40 | 75-80% | 2895 | Kern | 19.1 | 74.4 | 6.5 | 82.2 | 11.3 | 4.2 | 1.4 | 0.3 | 0.5 |
| 6077005135 | 42.37 | 79.39 | 75-80% | 5139 | San Joaquin | 13.6 | 70 | 16.4 | 28.8 | 56.6 | 2.4 | 0.4 | 7.9 | 3.9 |
| 6037134904 | 42.35 | 79.38 | 75-80% | 4338 | Los Angeles | 14.1 | 76.1 | 9.8 | 54.5 | 29.5 | 4.1 | 0.2 | 9.4 | 2.3 |
| 6013314103 | 42.34 | 79.37 | 75-80% | 5546 | Contra Costa | 17.9 | 76.9 | 5.2 | 54.5 | 14.3 | 14.9 | 0.4 | 13 | 2.9 |
| 6037602504 | 42.33 | 79.35 | 75-80% | 4407 | Los Angeles | 16.8 | 79.1 | 4.1 | 44.1 | 5 | 38.5 | 0.2 | 9.6 | 2.5 |
| 6047000801 | 42.33 | 79.34 | 75-80% | 4444 | Merced | 15.8 | 71.4 | 12.8 | 48.6 | 36.9 | 5.5 | 0.2 | 6 | 2.7 |
| 6099000601 | 42.32 | 79.33 | 75-80% | 4647 | Stanislaus | 13.1 | 78.2 | 8.7 | 35.2 | 52.4 | 3.2 | 0.4 | 6.3 | 2.6 |
| 6115040302 | 42.32 | 79.32 | 75-80% | 2143 | Yuba | 22.2 | 71.5 | 6.3 | 49.6 | 36.4 | 2 | 0.8 | 8.1 | 3 |
| 6037603004 | 42.32 | 79.30 | 75-80% | 1512 | Los Angeles | 10.8 | 72.9 | 16.3 | 28.4 | 6.3 | 19.8 | 0 | 43.3 | 2.2 |
| 6073012501 | 42.30 | 79.29 | 75-80% | 3858 | San Diego | 14.4 | 70.6 | 15 | 70.7 | 13.8 | 5.2 | 0.5 | 7.5 | 2.3 |
| 6037209403 | 42.30 | 79.28 | 75-80% | 3600 | Los Angeles | 13.6 | 68.6 | 17.8 | 70.6 | 4.8 | 5.1 | 0.1 | 18.7 | 0.7 |
| 6037127520 | 42.30 | 79.27 | 75-80% | 4045 | Los Angeles | 19.8 | 77.6 | 2.6 | 82 | 6.2 | 3 | 0.1 | 6.5 | 2.1 |
| 6071000824 | 42.29 | 79.25 | 75-80% | 5092 | San Bernardino | 15.6 | 74.4 | 10 | 47.1 | 34.4 | 10.6 | 0.3 | 5.1 | 2.5 |
| 6067006101 | 42.29 | 79.24 | 75-80% | 4608 | Sacramento | 11.8 | 75.4 | 12.8 | 19.2 | 60.7 | 9.3 | 0.8 | 5.3 | 4.7 |

| | | | | | | | | | | | | | | |
|---|---|---|---|---|---|---|---|---|---|---|---|---|---|---|
| 6037535503 | 42.28 | 79.23 | 75-80% | 2497 | Los Angeles | 17.9 | 74.9 | 7.2 | 97.7 | 1.4 | 0.1 | 0.2 | 0.5 | 0.1 |
| 6037221120 | 42.28 | 79.22 | 75-80% | 3373 | Los Angeles | 16.2 | 77.6 | 6.2 | 93.6 | 2.1 | 1.6 | 0.1 | 1.8 | 0.8 |
| 6037406800 | 42.28 | 79.20 | 75-80% | 4926 | Los Angeles | 12.6 | 74.3 | 13.1 | 55.2 | 15.2 | 2.8 | 0.3 | 24.9 | 1.7 |
| 6029006500 | 42.27 | 79.19 | 75-80% | 5152 | Kern | 5.5 | 85.3 | 9.2 | 59 | 34.4 | 1.6 | 0.5 | 2.3 | 2.2 |
| 6067007007 | 42.27 | 79.18 | 75-80% | 5356 | Sacramento | 15.7 | 73.3 | 11 | 54.1 | 25.7 | 9.6 | 0.4 | 7 | 3.1 |
| 6029002816 | 42.26 | 79.17 | 75-80% | 5465 | Kern | 18.1 | 74.7 | 7.2 | 48 | 36.7 | 9.2 | 1.1 | 2.9 | 2.1 |
| 6037402803 | 42.26 | 79.15 | 75-80% | 3436 | Los Angeles | 19.9 | 75.4 | 4.7 | 88.2 | 4.6 | 3.7 | 0.1 | 2.9 | 0.6 |
| 6077001000 | 42.25 | 79.14 | 75-80% | 4915 | San Joaquin | 13.8 | 68.5 | 17.7 | 35.9 | 46.4 | 7.7 | 0.2 | 5.9 | 3.8 |
| 6071000903 | 42.24 | 79.13 | 75-80% | 4338 | San Bernardino | 16.9 | 75.3 | 7.8 | 60.2 | 23 | 8.8 | 0.4 | 5.9 | 1.7 |
| 6029001202 | 42.23 | 79.11 | 75-80% | 6264 | Kern | 25.6 | 71.1 | 3.3 | 83.9 | 6.6 | 7.3 | 0.7 | 0.5 | 0.9 |
| 6013320001 | 42.22 | 79.10 | 75-80% | 3615 | Contra Costa | 14.3 | 76.6 | 9.1 | 33.3 | 52.8 | 2.6 | 0.7 | 5.9 | 4.8 |
| 6037212800 | 42.22 | 79.09 | 75-80% | 4273 | Los Angeles | 12.1 | 76.3 | 11.6 | 53.1 | 8.1 | 8.8 | 0.1 | 28.1 | 1.8 |
| 6037237800 | 42.21 | 79.08 | 75-80% | 4371 | Los Angeles | 14.3 | 75.4 | 10.3 | 47.7 | 0.8 | 49.5 | 0.1 | 0.8 | 1.1 |
| 6071001906 | 42.21 | 79.06 | 75-80% | 7060 | San Bernardino | 14 | 81.2 | 4.8 | 49.5 | 24 | 11.9 | 0.3 | 11.8 | 2.6 |
| 6059099802 | 42.20 | 79.05 | 75-80% | 5111 | Orange | 12.3 | 68.2 | 19.5 | 29.3 | 19.6 | 0.9 | 0.1 | 48.8 | 1.3 |
| 6037238100 | 42.19 | 79.04 | 75-80% | 4626 | Los Angeles | 12.5 | 74 | 13.5 | 23 | 1 | 73.4 | 0.2 | 0.6 | 2 |
| 6037120104 | 42.17 | 79.03 | 75-80% | 2310 | Los Angeles | 16.7 | 78.3 | 5 | 69.2 | 8 | 5.5 | 0.1 | 15.5 | 1.7 |
| 6037237900 | 42.16 | 79.01 | 75-80% | 3621 | Los Angeles | 12.5 | 72.2 | 15.3 | 20.5 | 1.2 | 74.6 | 0.1 | 0.7 | 3 |
| 6039000506 | 42.16 | 79.00 | 75-80% | 6438 | Madera | 17.3 | 74 | 8.7 | 67.9 | 26.5 | 2.2 | 0.6 | 1.1 | 1.8 |
| 6067004601 | 42.16 | 78.99 | 75-80% | 7614 | Sacramento | 18.8 | 73.4 | 7.8 | 49.8 | 18.3 | 10.5 | 0.7 | 17.5 | 3.2 |
| 6107002800 | 42.15 | 78.98 | 75-80% | 3395 | Tulare | 24.5 | 69 | 6.5 | 83.9 | 14.3 | 0.3 | 0.3 | 0.7 | 0.4 |
| 6037530005 | 42.14 | 78.96 | 75-80% | 4346 | Los Angeles | 7.6 | 66.7 | 25.7 | 35.7 | 10.9 | 0.5 | 0.1 | 51.3 | 1.4 |
| 6029006202 | 42.13 | 78.95 | 75-80% | 6401 | Kern | 22.9 | 74 | 3.1 | 90.6 | 6.1 | 0.8 | 0.1 | 1.5 | 0.9 |
| 6107003901 | 42.12 | 78.94 | 75-80% | 7184 | Tulare | 20.2 | 73.6 | 6.2 | 74.9 | 21 | 0.4 | 1.1 | 1.2 | 1.4 |
| 6037481604 | 42.11 | 78.93 | 75-80% | 3942 | Los Angeles | 9.4 | 79.6 | 11 | 28.2 | 7.8 | 1.4 | 0.1 | 61.4 | 1.1 |
| 6037604100 | 42.10 | 78.91 | 75-80% | 7058 | Los Angeles | 15 | 77.9 | 7.1 | 64.2 | 16.5 | 7 | 0.4 | 9.1 | 2.9 |
| 6013314104 | 42.09 | 78.90 | 75-80% | 7118 | Contra Costa | 17.7 | 74.4 | 7.9 | 51.4 | 20.3 | 15.5 | 0.4 | 9.5 | 2.9 |
| 6029000504 | 42.08 | 78.89 | 75-80% | 4086 | Kern | 13.3 | 69.1 | 17.6 | 20.2 | 70.7 | 3.5 | 1.6 | 1.8 | 2.1 |
| 6037211201 | 42.08 | 78.88 | 75-80% | 2645 | Los Angeles | 13.6 | 80.2 | 6.2 | 74 | 7.5 | 3.3 | 0.2 | 13.7 | 1.4 |
| 6107001200 | 42.07 | 78.86 | 75-80% | 1337 | Tulare | 14.9 | 68.6 | 16.5 | 51.5 | 40.2 | 2.5 | 1.1 | 2.3 | 2.4 |
| 6047000701 | 42.07 | 78.85 | 75-80% | 3191 | Merced | 19.6 | 69.7 | 10.7 | 63.4 | 29.6 | 3 | 0.5 | 2.3 | 1.1 |
| 6037224310 | 42.05 | 78.84 | 75-80% | 2025 | Los Angeles | 16.3 | 77 | 6.7 | 89.4 | 4.3 | 1.6 | 0 | 3.9 | 0.7 |
| 6001437101 | 42.05 | 78.82 | 75-80% | 6448 | Alameda | 13.6 | 74.9 | 11.5 | 22.5 | 13.3 | 6.1 | 0.1 | 53.2 | 4.8 |
| 6107002202 | 42.04 | 78.81 | 75-80% | 5542 | Tulare | 22.4 | 71.1 | 6.5 | 77.4 | 15.4 | 4.6 | 0.4 | 0.7 | 1.5 |
| 6065040607 | 42.04 | 78.80 | 75-80% | 9317 | Riverside | 18.5 | 76.5 | 5 | 47.9 | 26.8 | 9.3 | 0.2 | 13.3 | 2.5 |
| 6037550201 | 42.03 | 78.79 | 75-80% | 2941 | Los Angeles | 15.5 | 76.1 | 8.4 | 81.3 | 9.6 | 2.3 | 0.2 | 5.6 | 1 |
| 6059074801 | 42.01 | 78.77 | 75-80% | 5499 | Orange | 17.1 | 76.6 | 6.3 | 93.2 | 1.2 | 2.7 | 0.3 | 2.3 | 0.3 |
| 6037277200 | 42.00 | 78.76 | 75-80% | 2490 | Los Angeles | 12.7 | 82.3 | 5 | 30.8 | 20.5 | 32.2 | 0.2 | 10.3 | 6 |
| 6075012502 | 42.00 | 78.75 | 75-80% | 3821 | San Francisco | 3.6 | 69.6 | 26.8 | 21.1 | 20 | 13.9 | 0.6 | 41.1 | 3.3 |
| 6001444601 | 41.99 | 78.74 | 75-80% | 4761 | Alameda | 12.5 | 74.6 | 12.9 | 26.3 | 35.1 | 4.1 | 0.4 | 30.2 | 3.8 |
| 6037120106 | 41.99 | 78.72 | 75-80% | 4417 | Los Angeles | 19.3 | 75.2 | 5.5 | 77.6 | 4.7 | 2.1 | 0.1 | 14.2 | 1.3 |
| 6037221303 | 41.98 | 78.71 | 75-80% | 2551 | Los Angeles | 14.7 | 78.4 | 6.9 | 76.8 | 3.4 | 7.6 | 0.5 | 11.1 | 0.6 |
| 6037432602 | 41.97 | 78.70 | 75-80% | 4554 | Los Angeles | 13 | 76.8 | 10.2 | 53.9 | 6.6 | 0.4 | 0.2 | 38.3 | 0.7 |
| 6029004702 | 41.96 | 78.69 | 75-80% | 4051 | Kern | 21.5 | 71.6 | 6.9 | 96.1 | 2.5 | 0.2 | 0.1 | 0.6 | 0.6 |
| 6085503113 | 41.93 | 78.67 | 75-80% | 4760 | Santa Clara | 17.8 | 75.9 | 6.3 | 79.7 | 10.9 | 1.7 | 0.6 | 5.6 | 1.6 |
| 6075017601 | 41.93 | 78.66 | 75-80% | 7630 | San Francisco | 5.6 | 85.1 | 9.3 | 13.6 | 31.6 | 12.9 | 1 | 36.4 | 4.5 |
| 6037405302 | 41.93 | 78.65 | 75-80% | 5351 | Los Angeles | 12.9 | 77.1 | 10 | 65.2 | 16.7 | 2 | 0.5 | 13.7 | 2 |
| 6065043517 | 41.93 | 78.64 | 75-80% | 6815 | Riverside | 20.2 | 75.1 | 4.7 | 53.8 | 26.8 | 9.6 | 1 | 5.8 | 3.1 |
| 6077003308 | 41.88 | 78.62 | 75-80% | 1590 | San Joaquin | 16.9 | 73.7 | 9.4 | 44.5 | 25.1 | 13 | 0.8 | 12.6 | 4 |
| 6037481603 | 41.88 | 78.61 | 75-80% | 3802 | Los Angeles | 9.4 | 78.9 | 11.7 | 24 | 5 | 1 | 0 | 69 | 0.9 |
| 6107003001 | 41.87 | 78.60 | 75-80% | 4652 | Tulare | 21.1 | 72 | 6.9 | 82 | 12.9 | 2.6 | 0.3 | 0.9 | 1.1 |
| 6037404201 | 41.86 | 78.58 | 75-80% | 3711 | Los Angeles | 17 | 77.6 | 5.4 | 76.6 | 13.1 | 3.4 | 0.1 | 5.6 | 1.2 |
| 6059086602 | 41.85 | 78.57 | 75-80% | 6131 | Orange | 16.1 | 75.4 | 8.5 | 65.3 | 17.7 | 2.8 | 0.2 | 12.7 | 1.4 |
| 6039000602 | 41.84 | 78.56 | 75-80% | 5161 | Madera | 20 | 71.9 | 8.1 | 88.6 | 9.4 | 0.8 | 0.5 | 0.2 | 0.5 |
| 6065046200 | 41.83 | 78.55 | 75-80% | 3341 | Riverside | 17.1 | 71.8 | 11.1 | 63.9 | 18.7 | 14 | 0.5 | 0.9 | 2 |
| 6059001402 | 41.82 | 78.53 | 75-80% | 5185 | Orange | 14.7 | 75.2 | 10.1 | 58 | 34.4 | 0.7 | 0.4 | 4.7 | 1.7 |
| 6001401000 | 41.81 | 78.52 | 75-80% | 5678 | Alameda | 11.2 | 80.8 | 8 | 14.2 | 22.3 | 50.2 | 0.4 | 7.6 | 5.4 |
| 6037535803 | 41.81 | 78.51 | 75-80% | 4458 | Los Angeles | 17.3 | 76.9 | 5.8 | 96.3 | 2.2 | 0.4 | 0.2 | 0.4 | 0.7 |
| 6037302003 | 41.80 | 78.50 | 75-80% | 3578 | Los Angeles | 8.2 | 75 | 16.8 | 12.5 | 70.8 | 1.1 | 0.1 | 12.5 | 3 |
| 6019003102 | 41.79 | 78.48 | 75-80% | 7048 | Fresno | 17.3 | 74.9 | 7.8 | 40.8 | 41.3 | 5.3 | 1.1 | 8.7 | 2.7 |
| 6111002300 | 41.78 | 78.47 | 75-80% | 7430 | Ventura | 18.1 | 77 | 4.9 | 70.7 | 24.2 | 1.4 | 0.5 | 1.6 | 1.6 |
| 6001407200 | 41.76 | 78.46 | 75-80% | 6746 | Alameda | 16.2 | 75.1 | 8.7 | 74.8 | 6.4 | 6.7 | 0.6 | 10.5 | 1 |
| 6037500700 | 41.74 | 78.45 | 75-80% | 6496 | Los Angeles | 12.3 | 73.4 | 14.3 | 91.9 | 5.6 | 0.7 | 0.2 | 1.2 | 0.4 |
| 6037603802 | 41.74 | 78.43 | 75-80% | 4153 | Los Angeles | 14.4 | 78.3 | 7.3 | 60.3 | 12.9 | 7.6 | 0.2 | 16.6 | 2.3 |
| 6067003700 | 41.73 | 78.42 | 75-80% | 4219 | Sacramento | 19.1 | 74 | 6.9 | 50.1 | 10.8 | 19 | 0.7 | 15.8 | 3.6 |
| 6037541801 | 41.68 | 78.41 | 75-80% | 4903 | Los Angeles | 18.8 | 76.8 | 4.4 | 81.1 | 1.7 | 14 | 0.1 | 1.9 | 1.2 |

| | | | | | | | | | | | | | | | |
|---|---|---|---|---|---|---|---|---|---|---|---|---|---|---|---|
| 6073004100 | 41.67 | 78.40 | 75-80% | 6546 | San Diego | 12.3 | 82.9 | 4.8 | 58 | 29 | 6.9 | 0.4 | 3.2 | 2.5 |
| 6037602200 | 41.63 | 78.38 | 75-80% | 7314 | Los Angeles | 13.6 | 78.5 | 7.9 | 50.2 | 26.5 | 10 | 0.2 | 10.3 | 2.8 |
| 6039000603 | 41.62 | 78.37 | 75-80% | 5585 | Madera | 24.7 | 70.4 | 4.9 | 89.5 | 5.8 | 3.1 | 0.3 | 0.7 | 0.6 |
| 6037402200 | 41.61 | 78.36 | 75-80% | 6584 | Los Angeles | 12.1 | 72.5 | 15.4 | 52.5 | 27.5 | 11.6 | 0.1 | 6.3 | 1.9 |
| 6071002902 | 41.59 | 78.35 | 75-80% | 6584 | San Bernardino | 17.3 | 73.3 | 9.4 | 75.9 | 15.3 | 5.9 | 0.3 | 1.8 | 0.8 |
| 6037554104 | 41.59 | 78.33 | 75-80% | 2600 | Los Angeles | 17.1 | 75.6 | 7.3 | 55.3 | 16 | 14.3 | 0.2 | 12.5 | 1.7 |
| 6029003304 | 41.58 | 78.32 | 75-80% | 5248 | Kern | 5.6 | 87.9 | 6.5 | 43.8 | 47 | 6.2 | 0.4 | 0.6 | 2 |
| 6099000202 | 41.57 | 78.31 | 75-80% | 6593 | Stanislaus | 18.2 | 73.2 | 8.6 | 29.9 | 62.9 | 1.1 | 0.4 | 3.3 | 2.4 |
| 6065042520 | 41.57 | 78.29 | 75-80% | 4669 | Riverside | 17.9 | 73.1 | 9 | 69.5 | 12.3 | 10.7 | 0.3 | 4.9 | 2.3 |
| 6071003900 | 41.57 | 78.28 | 75-80% | 5484 | San Bernardino | 17.7 | 74.1 | 8.2 | 81.3 | 11.9 | 4.8 | 0.3 | 0.9 | 0.7 |
| 6037530102 | 41.56 | 78.27 | 75-80% | 5116 | Los Angeles | 10.9 | 68.7 | 20.4 | 79.7 | 12.6 | 0.3 | 0.2 | 6.5 | 0.8 |
| 6071000826 | 41.56 | 78.26 | 75-80% | 4075 | San Bernardino | 14.8 | 76.3 | 8.9 | 49.9 | 34.8 | 7.2 | 0.3 | 5.7 | 2.2 |
| 6037189101 | 41.56 | 78.24 | 75-80% | 2743 | Los Angeles | 5.7 | 82.4 | 11.9 | 14 | 66.6 | 2.8 | 0.3 | 12.5 | 3.9 |
| 6037134521 | 41.54 | 78.23 | 75-80% | 3126 | Los Angeles | 18.9 | 78.9 | 2.2 | 90.2 | 5.2 | 0.8 | 0.1 | 2.8 | 0.9 |
| 6019008402 | 41.53 | 78.22 | 75-80% | 1152 | Fresno | 16.4 | 75.1 | 8.5 | 66.5 | 31.5 | 0.3 | 0.1 | 1.2 | 0.4 |
| 6037406200 | 41.53 | 78.21 | 75-80% | 5678 | Los Angeles | 12.6 | 71.3 | 16.1 | 60.1 | 20.6 | 4.4 | 0.4 | 12.7 | 1.8 |
| 6053014500 | 41.52 | 78.19 | 75-80% | 4410 | Monterey | 14.2 | 69.2 | 16.6 | 46.4 | 42.2 | 2.4 | 0.4 | 6.2 | 2.5 |
| 6065042719 | 41.52 | 78.18 | 75-80% | 5025 | Riverside | 16.4 | 73.7 | 9.9 | 57.7 | 34.3 | 4.2 | 0.5 | 1.7 | 1.5 |
| 6037201601 | 41.51 | 78.17 | 75-80% | 2288 | Los Angeles | 12.2 | 75.7 | 12.1 | 80.4 | 4.5 | 1.5 | 0.3 | 12.8 | 0.6 |
| 6071009912 | 41.50 | 78.16 | 75-80% | 4762 | San Bernardino | 16.6 | 68.4 | 15 | 43.7 | 35.1 | 14.8 | 0.7 | 2.4 | 3.2 |
| 6071003607 | 41.49 | 78.14 | 75-80% | 5369 | San Bernardino | 16.9 | 74.2 | 8.9 | 75.8 | 11.7 | 9.3 | 0.6 | 1.8 | 0.8 |
| 6037127604 | 41.49 | 78.13 | 75-80% | 2939 | Los Angeles | 14.9 | 71.4 | 13.7 | 53.1 | 27.8 | 6.8 | 0.1 | 9.3 | 2.8 |
| 6065042624 | 41.48 | 78.12 | 75-80% | 3784 | Riverside | 15.1 | 77.5 | 7.4 | 45.3 | 31.7 | 12.4 | 0.3 | 6.3 | 4 |
| 6037293307 | 41.47 | 78.11 | 75-80% | 2306 | Los Angeles | 15.7 | 77.6 | 6.7 | 56 | 15.4 | 13.1 | 0.1 | 12.8 | 2.5 |
| 6077003801 | 41.46 | 78.09 | 75-80% | 12552 | San Joaquin | 17.9 | 76.6 | 5.5 | 38.9 | 12.6 | 21.2 | 0.3 | 23 | 4 |
| 6111002400 | 41.45 | 78.08 | 75-80% | 2571 | Ventura | 8.4 | 81 | 10.6 | 23.1 | 67.7 | 2.6 | 1.1 | 1.8 | 3.7 |
| 6085503117 | 41.45 | 78.07 | 75-80% | 3120 | Santa Clara | 17.6 | 73.8 | 8.6 | 58.7 | 2.5 | 0.9 | 0 | 37.5 | 0.4 |
| 6037212900 | 41.44 | 78.06 | 75-80% | 4074 | Los Angeles | 12.5 | 79.3 | 8.2 | 54.3 | 6.2 | 11.8 | 0 | 25.9 | 1.8 |
| 6071010011 | 41.44 | 78.04 | 75-80% | 5221 | San Bernardino | 19.3 | 73.5 | 7.2 | 58.2 | 29.6 | 8 | 0.4 | 1.9 | 1.9 |
| 6065041411 | 41.43 | 78.03 | 75-80% | 3187 | Riverside | 15.2 | 73.1 | 11.7 | 81 | 14.5 | 1.5 | 0.5 | 1.8 | 0.8 |
| 6047000503 | 41.43 | 78.02 | 75-80% | 3292 | Merced | 9.8 | 82.8 | 7.4 | 40 | 35.7 | 14.9 | 2.1 | 5.3 | 2 |
| 6077003312 | 41.42 | 78.00 | 75-80% | 3220 | San Joaquin | 23.4 | 68.9 | 7.7 | 58.8 | 8.9 | 11.6 | 0.5 | 17.1 | 3.1 |
| 6077003500 | 41.42 | 77.99 | 75-80% | 20177 | San Joaquin | 16.1 | 73.7 | 10.2 | 26.2 | 24.3 | 6.4 | 0.3 | 38.8 | 3.9 |
| 6013313102 | 41.39 | 77.98 | 75-80% | 3984 | Contra Costa | 15.4 | 74.5 | 10.1 | 35.5 | 25 | 23.7 | 0.7 | 11.2 | 3.9 |
| 6071004601 | 41.38 | 77.97 | 75-80% | 7032 | San Bernardino | 17.3 | 77.9 | 4.8 | 48 | 27.2 | 17.6 | 0.5 | 4.1 | 2.7 |
| 6077001400 | 41.37 | 77.95 | 75-80% | 4425 | San Joaquin | 12.8 | 66.7 | 20.5 | 33.6 | 40.4 | 3.6 | 0.6 | 18.6 | 3.2 |
| 6013309000 | 41.37 | 77.94 | 75-80% | 2771 | Contra Costa | 13.3 | 77.9 | 8.8 | 29.2 | 24.7 | 33 | 0.3 | 8.5 | 4.3 |
| 6081602100 | 41.37 | 77.93 | 75-80% | 3615 | San Mateo | 16.2 | 76.6 | 7.2 | 72.4 | 9 | 1.9 | 0.4 | 14.1 | 2.1 |
| 6085501501 | 41.36 | 77.92 | 75-80% | 4278 | Santa Clara | 18.2 | 75.7 | 6.1 | 66.7 | 5.1 | 1.6 | 0.1 | 25.2 | 1.3 |
| 6071000821 | 41.36 | 77.90 | 75-80% | 3478 | San Bernardino | 15.1 | 81.2 | 3.7 | 40 | 31.9 | 14.3 | 0.2 | 10.9 | 2.7 |
| 6037120105 | 41.35 | 77.89 | 75-80% | 2812 | Los Angeles | 14.3 | 73.8 | 11.9 | 72.7 | 10 | 1.8 | 0.1 | 14.4 | 1.1 |
| 6073002502 | 41.35 | 77.88 | 75-80% | 6264 | San Diego | 15.8 | 76.9 | 7.3 | 50.5 | 23.2 | 11.4 | 0.5 | 11.7 | 2.7 |
| 6071004401 | 41.35 | 77.87 | 75-80% | 4383 | San Bernardino | 16.4 | 75.2 | 8.4 | 74.9 | 14.1 | 7 | 0.1 | 2.7 | 1.3 |
| 6059087401 | 41.35 | 77.85 | 75-80% | 3954 | Orange | 14.5 | 79.4 | 6.1 | 64.7 | 19.3 | 1.6 | 0.1 | 13.1 | 1.2 |
| 6001401600 | 41.35 | 77.84 | 75-80% | 2163 | Alameda | 13.1 | 81.7 | 5.2 | 20.8 | 16.2 | 46.5 | 0.7 | 12 | 3.9 |
| 6067009006 | 41.34 | 77.83 | 75-80% | 4940 | Sacramento | 13.6 | 76.7 | 9.7 | 20.9 | 50.5 | 12.1 | 0.6 | 10.5 | 5.5 |
| 6099000404 | 41.32 | 77.82 | 75-80% | 5564 | Stanislaus | 13.6 | 72 | 14.4 | 24 | 57.4 | 3.8 | 0.4 | 10.3 | 4.2 |
| 6067005102 | 41.30 | 77.80 | 75-80% | 4481 | Sacramento | 13.3 | 68.2 | 18.5 | 26 | 37.8 | 10.1 | 0.8 | 21.1 | 4.2 |
| 6071010802 | 41.27 | 77.79 | 75-80% | 5338 | San Bernardino | 11.6 | 75.4 | 13 | 17.9 | 73.7 | 2 | 0.8 | 1.6 | 4 |
| 6029004701 | 41.27 | 77.78 | 75-80% | 8868 | Kern | 20.2 | 76.2 | 3.6 | 89.1 | 7.6 | 1.8 | 0.1 | 0.6 | 0.7 |
| 6077005132 | 41.26 | 77.77 | 75-80% | 3257 | San Joaquin | 17.2 | 73.9 | 8.9 | 49.3 | 42.4 | 2.7 | 1 | 2.1 | 2.5 |
| 6077003305 | 41.25 | 77.75 | 75-80% | 3704 | San Joaquin | 12.8 | 68.2 | 19 | 34.8 | 44.3 | 6.5 | 0.5 | 10 | 3.9 |
| 6071001707 | 41.25 | 77.74 | 75-80% | 5966 | San Bernardino | 15.6 | 77.4 | 7 | 70.5 | 14.3 | 4.7 | 0.3 | 8.6 | 1.6 |
| 6065042518 | 41.24 | 77.73 | 75-80% | 3670 | Riverside | 18.2 | 77 | 4.8 | 54.3 | 15.7 | 21.8 | 0.3 | 5.8 | 2 |
| 6037554600 | 41.23 | 77.71 | 75-80% | 4374 | Los Angeles | 11.1 | 76.3 | 12.6 | 43 | 17.4 | 4.4 | 0.2 | 33.6 | 1.3 |
| 6059099904 | 41.22 | 77.70 | 75-80% | 6352 | Orange | 14.1 | 76.4 | 9.5 | 37 | 15.6 | 0.6 | 0.1 | 44.3 | 2.3 |
| 6073003404 | 41.20 | 77.69 | 75-80% | 4634 | San Diego | 18 | 74.9 | 7.1 | 62.2 | 2.8 | 16.6 | 0.1 | 16.5 | 1.8 |
| 6029003115 | 41.19 | 77.68 | 75-80% | 5482 | Kern | 19.7 | 74.7 | 5.6 | 65.2 | 18.6 | 9.9 | 0.4 | 3.6 | 2.4 |
| 6037552700 | 41.18 | 77.66 | 75-80% | 6985 | Los Angeles | 14.6 | 77.2 | 8.2 | 73.8 | 12.2 | 2.6 | 0.2 | 10.1 | 1.1 |
| 6047000401 | 41.17 | 77.65 | 75-80% | 1834 | Merced | 17.3 | 72.5 | 10.2 | 39 | 57 | 1.2 | 0.3 | 0.7 | 1.8 |
| 6037294301 | 41.17 | 77.64 | 75-80% | 2448 | Los Angeles | 13.9 | 75.6 | 10.5 | 81.7 | 8.9 | 1.3 | 0 | 6.8 | 1.2 |
| 6065042007 | 41.17 | 77.63 | 75-80% | 4339 | Riverside | 11.2 | 75.5 | 13.3 | 28.7 | 62.7 | 2.3 | 0.5 | 2.9 | 2.9 |
| 6071000403 | 41.15 | 77.61 | 75-80% | 4678 | San Bernardino | 12.6 | 75.9 | 11.5 | 55.7 | 34.4 | 1.4 | 0.4 | 6.6 | 1.5 |
| 6037195803 | 41.14 | 77.60 | 75-80% | 2603 | Los Angeles | 8.4 | 82.2 | 9.4 | 47.7 | 32.7 | 1.6 | 0.5 | 15.7 | 1.9 |
| 6013313101 | 41.13 | 77.59 | 75-80% | 7251 | Contra Costa | 15.1 | 70.7 | 14.2 | 39.2 | 22.1 | 20.2 | 0.2 | 15 | 3.3 |
| 6071001311 | 41.13 | 77.58 | 75-80% | 3236 | San Bernardino | 13.8 | 78.8 | 7.4 | 38.9 | 24.8 | 9.9 | 0.3 | 23 | 3.2 |

| | | | | | | | | | | | | | | | |
|---|---|---|---|---|---|---|---|---|---|---|---|---|---|---|---|
| 6025012001 | 41.11 | 77.56 | 75-80% | 3831 | Imperial | 15 | 69.5 | 15.5 | 98.4 | 1.3 | 0 | 0.1 | 0.2 | 0.1 |
| 6047002600 | 41.11 | 77.55 | 75-80% | 5319 | Merced | 16.8 | 73.7 | 9.5 | 38.3 | 42.8 | 3.3 | 0.4 | 12.3 | 3 |
| 6037238400 | 41.08 | 77.54 | 75-80% | 4497 | Los Angeles | 10.5 | 69.9 | 19.6 | 17.6 | 0.9 | 78.8 | 0.3 | 0.6 | 1.8 |
| 6037501002 | 41.08 | 77.53 | 75-80% | 4861 | Los Angeles | 13.1 | 75.7 | 11.2 | 81.5 | 14.9 | 0.5 | 0.2 | 1.8 | 1.1 |
| 6071012700 | 41.08 | 77.51 | 75-80% | 4052 | San Bernardino | 15.2 | 80 | 4.8 | 51.4 | 27.7 | 9.9 | 0.1 | 8.1 | 2.8 |
| 6037404803 | 41.06 | 77.50 | 75-80% | 1741 | Los Angeles | 14.4 | 74.5 | 11.1 | 78.3 | 8.8 | 1.4 | 0.3 | 10.1 | 1.1 |
| 6037119320 | 41.05 | 77.49 | 75-80% | 4694 | Los Angeles | 17.3 | 77.7 | 5 | 69.6 | 6.8 | 4.3 | 0.1 | 17.7 | 1.5 |
| 6065041004 | 41.04 | 77.48 | 75-80% | 4590 | Riverside | 17.9 | 77.3 | 4.8 | 61 | 26.8 | 4.1 | 0.3 | 5.6 | 2.2 |
| 6107002304 | 41.03 | 77.46 | 75-80% | 1740 | Tulare | 16.9 | 68.3 | 14.8 | 42.8 | 48.4 | 4.1 | 0.5 | 0.6 | 3.6 |
| 6037234000 | 41.03 | 77.45 | 75-80% | 5335 | Los Angeles | 10.9 | 74.4 | 14.7 | 31.4 | 2.9 | 60 | 0.2 | 2 | 3.5 |
| 6037534802 | 41.01 | 77.44 | 75-80% | 2875 | Los Angeles | 15.8 | 75.8 | 8.4 | 96.4 | 2.1 | 0.3 | 0 | 0.9 | 0.3 |
| 6037530006 | 40.99 | 77.42 | 75-80% | 3963 | Los Angeles | 13.9 | 74.9 | 11.2 | 64.5 | 13.4 | 0.8 | 0 | 20.2 | 1 |
| 6037530204 | 40.96 | 77.41 | 75-80% | 3682 | Los Angeles | 16 | 75 | 9 | 89.3 | 5.9 | 0.5 | 0.3 | 3.6 | 0.4 |
| 6065043507 | 40.95 | 77.40 | 75-80% | 6700 | Riverside | 18.9 | 69.7 | 11.4 | 50.6 | 38.5 | 6.6 | 0.6 | 1.2 | 2.5 |
| 6001425104 | 40.94 | 77.39 | 75-80% | 3175 | Alameda | 7.7 | 82 | 10.3 | 13.2 | 34 | 24.7 | 0.3 | 21.2 | 6.6 |
| 6037134800 | 40.94 | 77.37 | 75-80% | 5949 | Los Angeles | 11.5 | 77.4 | 11.1 | 46.7 | 33.5 | 3.7 | 0.3 | 12.9 | 2.9 |
| 6107000600 | 40.93 | 77.36 | 75-80% | 6200 | Tulare | 21.8 | 72.1 | 6.1 | 92.3 | 5.6 | 0.1 | 0.1 | 1.3 | 0.6 |
| 6037115302 | 40.89 | 77.35 | 75-80% | 4351 | Los Angeles | 17.3 | 77.3 | 5.4 | 79.4 | 10.8 | 1.6 | 0.1 | 6.9 | 1.2 |
| 6037104203 | 40.88 | 77.34 | 75-80% | 5210 | Los Angeles | 19.1 | 74.1 | 6.8 | 90.4 | 1.3 | 6.1 | 0.2 | 1.4 | 0.7 |
| 6037134001 | 40.87 | 77.32 | 75-80% | 3765 | Los Angeles | 16.2 | 78.4 | 5.4 | 75.4 | 8.9 | 2.7 | 0 | 12.1 | 0.9 |
| 6077004902 | 40.86 | 77.31 | 75-80% | 6106 | San Joaquin | 13.1 | 74.6 | 12.3 | 32.5 | 64.3 | 0.5 | 0.5 | 1.1 | 1.1 |
| 6099002902 | 40.84 | 77.30 | 75-80% | 7609 | Stanislaus | 15.5 | 73.2 | 11.3 | 41.5 | 53 | 0.6 | 0.7 | 2 | 2.1 |
| 6059086701 | 40.83 | 77.29 | 75-80% | 8876 | Orange | 15.1 | 73.8 | 11.1 | 56.6 | 22.8 | 2.2 | 0.2 | 16.7 | 1.5 |
| 6059087504 | 40.83 | 77.27 | 75-80% | 7141 | Orange | 20.2 | 75.6 | 4.2 | 81.1 | 9.1 | 1 | 0.4 | 7.5 | 1 |
| 6019004505 | 40.82 | 77.26 | 75-80% | 4866 | Fresno | 15.1 | 71.6 | 13.3 | 40.3 | 37.8 | 11.2 | 0.7 | 6.9 | 3.1 |
| 6037500300 | 40.81 | 77.25 | 75-80% | 2903 | Los Angeles | 9.4 | 77.1 | 13.5 | 58.7 | 23 | 1.7 | 0.1 | 14.6 | 1.8 |
| 6025010500 | 40.81 | 77.24 | 75-80% | 6593 | Imperial | 18 | 73.9 | 8.1 | 76.7 | 19 | 1.6 | 0.5 | 1 | 1.1 |
| 6071010300 | 40.78 | 77.22 | 75-80% | 3846 | San Bernardino | 12.8 | 73.2 | 14 | 32.9 | 59.5 | 2.3 | 0.9 | 2 | 2.4 |
| 6019003803 | 40.78 | 77.21 | 75-80% | 8153 | Fresno | 17.5 | 73.1 | 9.4 | 42.5 | 29.3 | 5.3 | 0.7 | 19 | 3.1 |
| 6099001002 | 40.78 | 77.20 | 75-80% | 3153 | Stanislaus | 13.4 | 71.2 | 15.4 | 27.1 | 61.1 | 3 | 1 | 3.7 | 4.1 |
| 6031000500 | 40.77 | 77.19 | 75-80% | 5476 | Kings | 17.5 | 73.5 | 9 | 59.2 | 34.4 | 2.2 | 0.6 | 2 | 1.5 |
| 6031001402 | 40.75 | 77.17 | 75-80% | 2384 | Kings | 19.4 | 70.9 | 9.7 | 82 | 13.8 | 2.1 | 0.5 | 0.4 | 1.2 |
| 6037127300 | 40.75 | 77.16 | 75-80% | 4460 | Los Angeles | 11.4 | 78.4 | 10.2 | 49 | 29.8 | 7.9 | 0.3 | 10 | 3.1 |
| 6037552002 | 40.75 | 77.15 | 75-80% | 3721 | Los Angeles | 14.7 | 77.3 | 8 | 70.2 | 9.2 | 6.3 | 0.4 | 12.3 | 1.6 |
| 6065041102 | 40.74 | 77.13 | 75-80% | 4185 | Riverside | 16.9 | 76.6 | 6.5 | 74.6 | 18.8 | 1.4 | 0.4 | 3.9 | 0.9 |
| 6065048902 | 40.74 | 77.12 | 75-80% | 5957 | Riverside | 17 | 76.3 | 6.7 | 66.4 | 14.1 | 13.5 | 0.2 | 3.7 | 2.1 |
| 6059001802 | 40.74 | 77.11 | 75-80% | 7154 | Orange | 16 | 77.5 | 6.5 | 60.9 | 22.9 | 3.4 | 0.3 | 11 | 1.5 |
| 6037187101 | 40.73 | 77.10 | 75-80% | 3235 | Los Angeles | 9.2 | 75.6 | 15.2 | 45.1 | 26.3 | 1.1 | 0.3 | 24.4 | 2.7 |
| 6059074501 | 40.72 | 77.08 | 75-80% | 6880 | Orange | 22 | 74.5 | 3.5 | 87.9 | 1.1 | 0.1 | 0.2 | 9.9 | 0.7 |
| 6037408623 | 40.72 | 77.07 | 75-80% | 3023 | Los Angeles | 9 | 74.4 | 16.6 | 32.8 | 13.1 | 2.6 | 0.2 | 48.8 | 2.4 |
| 6099000801 | 40.70 | 77.06 | 75-80% | 6216 | Stanislaus | 10.2 | 67.3 | 22.5 | 21.5 | 68.9 | 2.5 | 0.5 | 3.5 | 3.1 |
| 6037127603 | 40.70 | 77.05 | 75-80% | 2938 | Los Angeles | 16 | 79.1 | 4.9 | 74.5 | 14 | 4.3 | 0.3 | 5.8 | 1.1 |
| 6037432401 | 40.69 | 77.03 | 75-80% | 3789 | Los Angeles | 13.7 | 74.4 | 11.9 | 52.3 | 6.7 | 0.4 | 0.3 | 39.7 | 0.6 |
| 6037302102 | 40.69 | 77.02 | 75-80% | 6439 | Los Angeles | 8.9 | 77 | 14.1 | 21.6 | 56.5 | 1.4 | 0.1 | 18 | 2.4 |
| 6037531603 | 40.67 | 77.01 | 75-80% | 3568 | Los Angeles | 17.8 | 73.9 | 8.3 | 97.7 | 1.3 | 0.1 | 0.3 | 0.5 | 0.1 |
| 6037212701 | 40.66 | 77.00 | 75-80% | 2430 | Los Angeles | 9 | 73.3 | 17.7 | 29.5 | 8 | 5.4 | 0 | 55.4 | 1.6 |
| 6067000800 | 40.66 | 76.98 | 75-80% | 1425 | Sacramento | 2 | 69.3 | 28.7 | 14.6 | 67.9 | 4.4 | 0.2 | 9.9 | 2.9 |
| 6037482401 | 40.66 | 76.97 | 75-80% | 3761 | Los Angeles | 12.1 | 76.2 | 11.7 | 37.6 | 2.7 | 0.2 | 0.1 | 58.6 | 0.9 |
| 6019005409 | 40.65 | 76.96 | 75-80% | 3560 | Fresno | 11.1 | 79.2 | 9.7 | 33.5 | 42.4 | 11.3 | 0.4 | 8.8 | 3.5 |
| 6037213100 | 40.64 | 76.95 | 75-80% | 2721 | Los Angeles | 11.2 | 75.5 | 13.3 | 31.8 | 6.6 | 12 | 0 | 47.7 | 1.9 |
| 6001407400 | 40.62 | 76.93 | 75-80% | 3954 | Alameda | 16.4 | 77.3 | 6.3 | 64.9 | 3.4 | 19.9 | 0.3 | 9.9 | 1.7 |
| 6037134710 | 40.62 | 76.92 | 75-80% | 5287 | Los Angeles | 16.8 | 77.6 | 5.6 | 69 | 14 | 3.2 | 0.2 | 11.7 | 2 |
| 6019001413 | 40.61 | 76.91 | 75-80% | 4605 | Fresno | 18.4 | 72.1 | 9.5 | 36.1 | 31.2 | 2.8 | 0.4 | 27.5 | 1.8 |
| 6085505202 | 40.60 | 76.89 | 75-80% | 5867 | Santa Clara | 15.9 | 75.6 | 8.5 | 41.6 | 25 | 3.9 | 0.4 | 25.8 | 3.4 |
| 6037213402 | 40.60 | 76.88 | 75-80% | 4645 | Los Angeles | 13.1 | 80.2 | 6.7 | 73.8 | 4 | 2.4 | 0.2 | 18.8 | 0.8 |
| 6075023300 | 40.59 | 76.87 | 75-80% | 2624 | San Francisco | 12.1 | 76.2 | 11.7 | 21 | 2.6 | 10.8 | 0.5 | 63.1 | 2 |
| 6059076204 | 40.56 | 76.86 | 75-80% | 4492 | Orange | 16.9 | 77.9 | 5.2 | 68.8 | 21.1 | 1 | 0.3 | 7.3 | 1.4 |
| 6037123800 | 40.56 | 76.84 | 75-80% | 5531 | Los Angeles | 11.1 | 78 | 10.9 | 27 | 60.4 | 4.4 | 0.3 | 5.2 | 2.7 |
| 6029005103 | 40.55 | 76.83 | 75-80% | 2564 | Kern | 11.5 | 64.8 | 23.7 | 9.5 | 85.2 | 0.3 | 1.3 | 1.6 | 2.1 |
| 6037601202 | 40.54 | 76.82 | 75-80% | 4115 | Los Angeles | 14.3 | 78 | 7.7 | 90 | 3 | 5.1 | 0.1 | 1.5 | 0.3 |
| 6073010009 | 40.54 | 76.81 | 75-80% | 6693 | San Diego | 17.5 | 76.8 | 5.7 | 91 | 3 | 2.5 | 0 | 2.9 | 0.6 |
| 6037133100 | 40.54 | 76.79 | 75-80% | 5446 | Los Angeles | 10.7 | 69 | 20.3 | 33.1 | 50.5 | 3.7 | 0.2 | 8.8 | 3.8 |
| 6059074901 | 40.54 | 76.78 | 75-80% | 9170 | Orange | 19.5 | 73.7 | 6.8 | 94.5 | 1.6 | 0.2 | 0.2 | 3.2 | 0.4 |
| 6059075201 | 40.53 | 76.77 | 75-80% | 5822 | Orange | 17.7 | 76.2 | 6.1 | 92.3 | 1.9 | 1 | 0.3 | 4.1 | 0.3 |
| 6065041407 | 40.51 | 76.76 | 75-80% | 5830 | Riverside | 17 | 73.4 | 9.6 | 64.2 | 22.1 | 6 | 0.3 | 5.7 | 1.7 |
| 6107001003 | 40.50 | 76.74 | 75-80% | 19732 | Tulare | 19.6 | 74.6 | 5.8 | 48.4 | 40.1 | 1.5 | 0.4 | 7.7 | 2 |

| | | | | | | | | | | | | | | |
|---|---|---|---|---|---|---|---|---|---|---|---|---|---|---|
| 6071006603 | 40.50 | 76.73 | 75-80% | 4958 | San Bernardino | 15.5 | 74.4 | 10.1 | 80.2 | 11.4 | 4.7 | 0.1 | 2.4 | 1.3 |
| 6037134305 | 40.50 | 76.72 | 75-80% | 3847 | Los Angeles | 18.6 | 77.4 | 4 | 77.6 | 8.6 | 2.7 | 0 | 10.1 | 1.1 |
| 6037234200 | 40.47 | 76.71 | 75-80% | 2376 | Los Angeles | 8.6 | 67 | 24.4 | 11.8 | 2.9 | 70.7 | 0.3 | 10.4 | 3.9 |
| 6071002901 | 40.46 | 76.69 | 75-80% | 4446 | San Bernardino | 19.2 | 75.2 | 5.6 | 81.3 | 12.1 | 4.6 | 0.1 | 1 | 1 |
| 6071000823 | 40.45 | 76.68 | 75-80% | 6658 | San Bernardino | 15.6 | 77 | 7.4 | 47.9 | 30.5 | 10.8 | 0.3 | 7.8 | 2.7 |
| 6065045707 | 40.44 | 76.67 | 75-80% | 6397 | Riverside | 19.4 | 74.9 | 5.7 | 96.4 | 2.5 | 0.3 | 0 | 0.4 | 0.4 |
| 6019007400 | 40.42 | 76.66 | 75-80% | 3548 | Fresno | 16.9 | 73.7 | 9.4 | 67.8 | 30.5 | 0.1 | 0.4 | 0.5 | 0.7 |
| 6099002605 | 40.42 | 76.64 | 75-80% | 3855 | Stanislaus | 14.8 | 73.9 | 11.3 | 48.3 | 45 | 1.5 | 0.5 | 2.3 | 2.3 |
| 6037277400 | 40.40 | 76.63 | 75-80% | 1533 | Los Angeles | 15.4 | 79.8 | 4.8 | 22.9 | 8.2 | 53.9 | 0 | 11 | 4 |
| 6047000303 | 40.40 | 76.62 | 75-80% | 2158 | Merced | 16.4 | 71.4 | 12.2 | 48.4 | 45.1 | 0.4 | 1.2 | 3.8 | 1.2 |
| 6099003202 | 40.39 | 76.60 | 75-80% | 16007 | Stanislaus | 18.2 | 76.1 | 5.7 | 53.6 | 28.3 | 6.9 | 0.5 | 7.5 | 3.3 |
| 6071010025 | 40.38 | 76.59 | 75-80% | 7405 | San Bernardino | 17.7 | 70.9 | 11.4 | 46.3 | 33.2 | 12.7 | 0.6 | 3.9 | 3.3 |
| 6077004308 | 40.37 | 76.58 | 75-80% | 3870 | San Joaquin | 18.4 | 75.6 | 6 | 52.7 | 33 | 1 | 0.7 | 9.2 | 3.4 |
| 6037195903 | 40.37 | 76.57 | 75-80% | 2216 | Los Angeles | 7.2 | 85.1 | 7.7 | 51 | 22.4 | 3.2 | 0.3 | 21.4 | 1.8 |
| 6037408133 | 40.35 | 76.55 | 75-80% | 5739 | Los Angeles | 14.1 | 77 | 8.9 | 51 | 6.1 | 3.8 | 0.3 | 36.7 | 2.1 |
| 6077005206 | 40.34 | 76.54 | 75-80% | 16787 | San Joaquin | 19.4 | 75.2 | 5.4 | 24.3 | 34.5 | 7.1 | 0.3 | 28.4 | 5.4 |
| 6037554801 | 40.33 | 76.53 | 75-80% | 3366 | Los Angeles | 14.9 | 76.7 | 8.4 | 76.2 | 7.6 | 2.5 | 0.1 | 11.9 | 1.7 |
| 6037211420 | 40.32 | 76.52 | 75-80% | 3859 | Los Angeles | 11.6 | 79.1 | 9.3 | 52 | 9.3 | 3.7 | 0.1 | 33.8 | 1.2 |
| 6059099402 | 40.32 | 76.50 | 75-80% | 8090 | Orange | 18.7 | 76.7 | 4.6 | 70.2 | 20.7 | 0.5 | 0.1 | 7 | 1.4 |
| 6037294200 | 40.31 | 76.49 | 75-80% | 4951 | Los Angeles | 15.9 | 74.8 | 9.3 | 87.7 | 6.5 | 0.9 | 0.3 | 3.2 | 1.4 |
| 6037900300 | 40.30 | 76.48 | 75-80% | 4514 | Los Angeles | 14.5 | 77.3 | 8.2 | 37.8 | 42 | 12.3 | 0.6 | 4.4 | 2.9 |
| 6037191302 | 40.29 | 76.47 | 75-80% | 2422 | Los Angeles | 9.6 | 81.1 | 9.3 | 47.5 | 20.6 | 3.3 | 0.2 | 26.5 | 1.8 |
| 6065040405 | 40.29 | 76.45 | 75-80% | 5353 | Riverside | 12.1 | 76 | 11.9 | 43.9 | 45.8 | 3.3 | 0.4 | 4.9 | 1.8 |
| 6037543321 | 40.27 | 76.44 | 75-80% | 5418 | Los Angeles | 10.7 | 74.3 | 15 | 13.8 | 8.8 | 61.4 | 0.1 | 12.6 | 3.4 |
| 6037540202 | 40.26 | 76.43 | 75-80% | 6845 | Los Angeles | 17.6 | 74 | 8.4 | 87.3 | 3.5 | 7.5 | 0.1 | 1.2 | 0.5 |
| 6037432402 | 40.25 | 76.42 | 75-80% | 6310 | Los Angeles | 15.1 | 74.7 | 10.2 | 61.6 | 6.3 | 0.7 | 0.2 | 30.3 | 0.9 |
| 6067009601 | 40.23 | 76.40 | 75-80% | 6621 | Sacramento | 17 | 75.3 | 7.7 | 24.3 | 10.6 | 23.9 | 0.2 | 35.7 | 5.3 |
| 6001402700 | 40.23 | 76.39 | 75-80% | 1569 | Alameda | 13.7 | 79.7 | 6.6 | 15.5 | 12.7 | 56.2 | 0.1 | 10.3 | 5.3 |
| 6037222100 | 40.19 | 76.38 | 75-80% | 3877 | Los Angeles | 14.5 | 77.2 | 8.3 | 67.8 | 3.4 | 23.9 | 0.1 | 2.6 | 2.2 |
| 6037571703 | 40.18 | 76.37 | 75-80% | 3667 | Los Angeles | 16.4 | 70.5 | 13.1 | 59.3 | 8 | 14.8 | 0.1 | 15.5 | 2.2 |
| 6073003305 | 40.17 | 76.35 | 75-80% | 5738 | San Diego | 18 | 74.1 | 7.9 | 56.4 | 2.2 | 30.6 | 0 | 8.8 | 2 |
| 6071000606 | 40.17 | 76.34 | 75-80% | 4374 | San Bernardino | 17.2 | 76.7 | 6.1 | 69.8 | 18.3 | 3.2 | 0.5 | 7 | 1.2 |
| 6029001901 | 40.17 | 76.33 | 75-80% | 3434 | Kern | 15.5 | 74.5 | 10 | 40 | 48.4 | 4.4 | 0.9 | 3.3 | 2.9 |
| 6037576903 | 40.16 | 76.31 | 75-80% | 3802 | Los Angeles | 16.5 | 80.3 | 3.2 | 58.2 | 12.9 | 16.4 | 0.3 | 9.1 | 3 |
| 6037221210 | 40.15 | 76.30 | 75-80% | 3300 | Los Angeles | 13.6 | 79.1 | 7.3 | 81.4 | 2.8 | 5 | 0.2 | 9.4 | 1.2 |
| 6025010700 | 40.14 | 76.29 | 75-80% | 4322 | Imperial | 18 | 69.7 | 12.3 | 94.1 | 3.2 | 1.9 | 0.3 | 0.1 | 0.4 |
| 6071001200 | 40.13 | 76.28 | 75-80% | 4730 | San Bernardino | 14.5 | 76.3 | 9.2 | 56.7 | 37.1 | 2.5 | 0.2 | 1.6 | 1.9 |
| 6071006100 | 40.12 | 76.26 | 75-80% | 8346 | San Bernardino | 15.7 | 73.8 | 10.5 | 47 | 34.2 | 13.2 | 0.4 | 3 | 2.3 |
| 6037320201 | 40.11 | 76.25 | 75-80% | 3756 | Los Angeles | 17.8 | 74.9 | 7.3 | 94 | 4.6 | 0.6 | 0.2 | 0.2 | 0.3 |
| 6037503105 | 40.11 | 76.24 | 75-80% | 3634 | Los Angeles | 15.5 | 77.9 | 6.6 | 75.6 | 14.4 | 2.3 | 0.2 | 6.1 | 1.3 |
| 6037209820 | 40.11 | 76.23 | 75-80% | 2968 | Los Angeles | 16.6 | 78.2 | 5.2 | 86.2 | 2 | 3.8 | 0.1 | 6.6 | 1.3 |
| 6037294110 | 40.11 | 76.21 | 75-80% | 4140 | Los Angeles | 15.1 | 75.5 | 9.4 | 86.3 | 6.4 | 1.2 | 0.1 | 5 | 0.9 |
| 6075012301 | 40.11 | 76.20 | 75-80% | 2734 | San Francisco | 4.7 | 75.4 | 19.9 | 21.9 | 31.7 | 11.6 | 0.6 | 31 | 3.3 |
| 6077003407 | 40.10 | 76.19 | 75-80% | 2914 | San Joaquin | 21.4 | 68 | 10.6 | 36.8 | 15.8 | 15.3 | 0.4 | 27.6 | 4.3 |
| 6037481401 | 40.09 | 76.18 | 75-80% | 6061 | Los Angeles | 9 | 78.3 | 12.7 | 16.1 | 5.2 | 0.2 | 0.1 | 78 | 0.5 |
| 6073022000 | 40.08 | 76.16 | 75-80% | 4186 | San Diego | 14.5 | 74.6 | 10.9 | 52.2 | 7.5 | 3.3 | 0.2 | 34.4 | 2.4 |
| 6037431100 | 40.08 | 76.15 | 75-80% | 6629 | Los Angeles | 14.2 | 76.9 | 8.9 | 61.2 | 14.2 | 13.2 | 0.2 | 9 | 2.2 |
| 6037502003 | 40.07 | 76.14 | 75-80% | 2693 | Los Angeles | 15.1 | 77.5 | 7.4 | 84.5 | 11.8 | 0.7 | 0.8 | 1.2 | 1 |
| 6059087806 | 40.06 | 76.13 | 75-80% | 5702 | Orange | 16.8 | 76.7 | 6.5 | 61.7 | 16 | 1.6 | 0.4 | 18.6 | 1.7 |
| 6059087901 | 40.06 | 76.11 | 75-80% | 3638 | Orange | 13.3 | 70.9 | 15.8 | 44.9 | 19.3 | 1.6 | 0.5 | 31.8 | 1.9 |
| 6071002207 | 40.05 | 76.10 | 75-80% | 4461 | San Bernardino | 6.1 | 91.4 | 2.5 | 48.4 | 24.8 | 22.2 | 0.1 | 2.1 | 2.4 |
| 6037310800 | 40.05 | 76.09 | 75-80% | 4909 | Los Angeles | 10.1 | 75.9 | 14 | 30.1 | 54 | 2 | 0.3 | 10.3 | 3.3 |
| 6013364002 | 40.04 | 76.08 | 75-80% | 5518 | Contra Costa | 12.8 | 74.2 | 13 | 37.5 | 28.8 | 12.7 | 0.3 | 17.4 | 3.3 |
| 6037104204 | 40.03 | 76.06 | 75-80% | 3375 | Los Angeles | 15.6 | 76.7 | 7.7 | 73.5 | 10.2 | 7.4 | 0.1 | 8 | 0.8 |
| 6087110300 | 39.99 | 76.05 | 75-80% | 6710 | Santa Cruz | 20.8 | 74.3 | 4.9 | 92 | 5.2 | 0.2 | 0.3 | 1.3 | 0.9 |
| 6065041302 | 39.99 | 76.04 | 75-80% | 4303 | Riverside | 19.3 | 75.4 | 5.3 | 81.6 | 11 | 1.9 | 0.5 | 4.2 | 0.8 |
| 6037544002 | 39.98 | 76.02 | 75-80% | 3142 | Los Angeles | 14 | 76.1 | 9.9 | 62.2 | 12.3 | 4.5 | 0.1 | 18.7 | 2.3 |
| 6065045502 | 39.98 | 76.01 | 75-80% | 3744 | Riverside | 18.6 | 72 | 9.4 | 84.3 | 12.2 | 1.1 | 0.3 | 1 | 1 |
| 6013392200 | 39.97 | 76.00 | 75-80% | 10605 | Contra Costa | 13.2 | 77.5 | 9.3 | 37.1 | 15.8 | 18.2 | 0.2 | 25.5 | 3.1 |
| 6059110302 | 39.97 | 75.99 | 75-80% | 6033 | Orange | 12 | 76.8 | 11.2 | 46.5 | 28.5 | 1.5 | 0.3 | 20.8 | 2.4 |
| 6037134522 | 39.97 | 75.97 | 75-80% | 3954 | Los Angeles | 17.7 | 77.3 | 5 | 70 | 15.5 | 5 | 0.2 | 7.7 | 1.7 |
| 6067004401 | 39.97 | 75.96 | 75-80% | 4122 | Sacramento | 16 | 74 | 10 | 40 | 21.9 | 16.8 | 0.7 | 16 | 4.8 |
| 6095251802 | 39.96 | 75.95 | 75-80% | 2538 | Solano | 12.1 | 64.4 | 23.5 | 24.9 | 24 | 23.2 | 0.3 | 23.8 | 3.7 |
| 6001422000 | 39.95 | 75.94 | 75-80% | 1756 | Alameda | 9.1 | 82.5 | 8.4 | 12.6 | 43.3 | 28 | 0.2 | 10 | 5.9 |
| 6029006401 | 39.95 | 75.92 | 75-80% | 8320 | Kern | 20.7 | 73.8 | 5.5 | 95.1 | 4 | 0.1 | 0.2 | 0.5 | 0.2 |
| 6013302005 | 39.94 | 75.91 | 75-80% | 6592 | Contra Costa | 15.6 | 74.5 | 9.9 | 39.1 | 46.2 | 6.8 | 0.8 | 3.4 | 3.7 |

| | | | | | | | | | | | | | | | |
|---|---|---|---|---|---|---|---|---|---|---|---|---|---|---|---|
| 6071003401 | 39.93 | 75.90 | 75-80% | 7502 | San Bernardino | 17 | 76.9 | 6.1 | 79 | 14 | 4.2 | 0.2 | 1.7 | 0.8 |
| 6065043005 | 39.93 | 75.89 | 75-80% | 5049 | Riverside | 16.4 | 76.5 | 7.1 | 52.1 | 39 | 3.3 | 0.4 | 3 | 2.3 |
| 6065042521 | 39.92 | 75.87 | 75-80% | 4922 | Riverside | 17.8 | 76.4 | 5.8 | 64.5 | 12.9 | 15 | 0.3 | 5 | 2.2 |
| 6097153200 | 39.90 | 75.86 | 75-80% | 7522 | Sonoma | 16.9 | 77.5 | 5.6 | 49.2 | 35 | 2.8 | 1.1 | 8.8 | 3.1 |
| 6037113422 | 39.90 | 75.85 | 75-80% | 6057 | Los Angeles | 12.8 | 77.9 | 9.3 | 42.2 | 31.6 | 5.6 | 0.1 | 17.6 | 2.9 |
| 6107001601 | 39.90 | 75.84 | 75-80% | 5587 | Tulare | 21 | 71.9 | 7.1 | 85.8 | 12.8 | 0.1 | 0.5 | 0.1 | 0.8 |
| 6029002814 | 39.90 | 75.82 | 75-80% | 4158 | Kern | 17.6 | 71.2 | 11.2 | 47.4 | 34.2 | 11.2 | 0.3 | 4.6 | 2.3 |
| 6037106520 | 39.90 | 75.81 | 75-80% | 5837 | Los Angeles | 15.4 | 75.3 | 9.3 | 85.4 | 11.3 | 1.1 | 0.3 | 1.2 | 0.6 |
| 6037407601 | 39.89 | 75.80 | 75-80% | 4366 | Los Angeles | 16.1 | 77.1 | 6.8 | 84.2 | 4 | 1.1 | 0.3 | 9.7 | 0.8 |
| 6037296902 | 39.89 | 75.79 | 75-80% | 3851 | Los Angeles | 14.1 | 75.3 | 10.6 | 54 | 32.8 | 6.6 | 0.2 | 4.2 | 2.1 |
| 6019003804 | 39.89 | 75.77 | 75-80% | 5531 | Fresno | 16 | 77.7 | 6.3 | 47.3 | 23.6 | 9.3 | 0.4 | 16.4 | 2.9 |
| 6059011714 | 39.88 | 75.76 | 75-80% | 499 | Orange | 14.4 | 83.4 | 2.2 | 70.9 | 19 | 2 | 0 | 6.8 | 1.2 |
| 6071002606 | 39.88 | 75.75 | 75-80% | 7089 | San Bernardino | 17.1 | 78.6 | 4.3 | 68.3 | 11 | 12.6 | 0.3 | 5.9 | 1.9 |
| 6037212304 | 39.87 | 75.73 | 75-80% | 1804 | Los Angeles | 12.9 | 78.7 | 8.4 | 67.9 | 10 | 4.7 | 0.3 | 15.9 | 1.3 |
| 6037143200 | 39.86 | 75.72 | 75-80% | 3743 | Los Angeles | 8.1 | 85 | 6.9 | 18.8 | 61 | 7.9 | 0.2 | 8.1 | 3.9 |
| 6037543702 | 39.85 | 75.71 | 75-80% | 7083 | Los Angeles | 13.9 | 76.4 | 9.7 | 52 | 10 | 4.7 | 0.3 | 30.8 | 2.2 |
| 6037408631 | 39.85 | 75.70 | 75-80% | 5087 | Los Angeles | 11.9 | 76 | 12.1 | 55.5 | 11.8 | 1.2 | 0.4 | 29.9 | 1.2 |
| 6037603703 | 39.80 | 75.68 | 75-80% | 2703 | Los Angeles | 12.9 | 76.1 | 11 | 42.8 | 26.4 | 7.8 | 0.1 | 19.8 | 3.1 |
| 6039000400 | 39.79 | 75.67 | 75-80% | 1288 | Madera | 17.5 | 73.3 | 9.2 | 66.1 | 32 | 0.7 | 0.5 | 0.3 | 0.4 |
| 6073005200 | 39.76 | 75.66 | 75-80% | 4563 | San Diego | 3.7 | 86.4 | 9.9 | 20 | 52.4 | 13 | 0.9 | 8.7 | 5.1 |
| 6037301900 | 39.76 | 75.65 | 75-80% | 7810 | Los Angeles | 9.3 | 71.3 | 19.4 | 14 | 64.2 | 1.6 | 0.1 | 16.1 | 4 |
| 6107002100 | 39.76 | 75.63 | 75-80% | 2499 | Tulare | 19.3 | 72.5 | 8.2 | 56.3 | 40.6 | 0.2 | 0.9 | 0.7 | 1.3 |
| 6029003500 | 39.73 | 75.62 | 75-80% | 6156 | Kern | 15.7 | 73 | 11.3 | 26.2 | 67.6 | 0.8 | 1 | 2.3 | 2.1 |
| 6037530003 | 39.70 | 75.61 | 75-80% | 2983 | Los Angeles | 8.7 | 66.4 | 24.9 | 58.1 | 22.3 | 0.1 | 0.1 | 17.8 | 1.6 |
| 6037601001 | 39.70 | 75.60 | 75-80% | 2154 | Los Angeles | 8.7 | 67.8 | 23.5 | 19.4 | 3.7 | 70.8 | 0.2 | 2.7 | 3.2 |
| 6073012600 | 39.69 | 75.58 | 75-80% | 5047 | San Diego | 15.2 | 73.9 | 10.9 | 75.6 | 15.3 | 2.7 | 0.4 | 3.9 | 2.1 |
| 6071003803 | 39.69 | 75.57 | 75-80% | 4732 | San Bernardino | 17.4 | 74.9 | 7.7 | 74.6 | 11.9 | 10.6 | 0.2 | 1.3 | 1.5 |
| 6001405401 | 39.68 | 75.56 | 75-80% | 3957 | Alameda | 10.8 | 80.9 | 8.3 | 21 | 11.6 | 19.3 | 0.4 | 44.3 | 3.5 |
| 6001440301 | 39.68 | 75.55 | 75-80% | 7312 | Alameda | 14.6 | 75.9 | 9.5 | 34.5 | 17.7 | 5.7 | 0.2 | 37.4 | 4.5 |
| 6099002701 | 39.67 | 75.53 | 75-80% | 3811 | Stanislaus | 12.7 | 75.9 | 11.4 | 44.2 | 44.1 | 1.9 | 0.8 | 6.2 | 2.8 |
| 6059088501 | 39.67 | 75.52 | 75-80% | 6785 | Orange | 16.2 | 75.8 | 8 | 53.2 | 16.1 | 0.7 | 0.2 | 27.8 | 1.8 |
| 6073003303 | 39.66 | 75.51 | 75-80% | 4193 | San Diego | 20.8 | 74.9 | 4.3 | 71 | 4.2 | 14.6 | 0.2 | 7.9 | 2.1 |
| 6059001201 | 39.65 | 75.50 | 75-80% | 5505 | Orange | 18.8 | 75.4 | 5.8 | 80.6 | 12.5 | 1.7 | 0.2 | 3.5 | 1.3 |
| 6001406201 | 39.64 | 75.48 | 75-80% | 4649 | Alameda | 16 | 77.8 | 6.2 | 49.2 | 3.1 | 15.5 | 0.3 | 30.7 | 1.3 |
| 6037115404 | 39.63 | 75.47 | 75-80% | 2913 | Los Angeles | 12.4 | 77.8 | 9.8 | 51.4 | 24.3 | 7.1 | 0.1 | 14.3 | 2.8 |
| 6031001701 | 39.63 | 75.46 | 75-80% | 9142 | Kings | 21.5 | 73.9 | 4.6 | 91.1 | 6.9 | 0.5 | 0.2 | 0.6 | 0.6 |
| 6071006201 | 39.62 | 75.44 | 75-80% | 3583 | San Bernardino | 16.9 | 74.1 | 9 | 58.6 | 26.8 | 10.4 | 0.4 | 1.7 | 2.1 |
| 6081604200 | 39.61 | 75.43 | 75-80% | 4170 | San Mateo | 14.3 | 78 | 7.7 | 56.9 | 14.9 | 0.9 | 0.5 | 23.1 | 3.7 |
| 6077003406 | 39.60 | 75.42 | 75-80% | 3700 | San Joaquin | 19.3 | 68.7 | 12 | 33.9 | 13.6 | 16.5 | 0.3 | 29.9 | 5.7 |
| 6065042517 | 39.60 | 75.41 | 75-80% | 3278 | Riverside | 17.1 | 77.4 | 5.5 | 62.6 | 15.9 | 14.2 | 0.1 | 5.1 | 2.2 |
| 6037131020 | 39.60 | 75.39 | 75-80% | 5698 | Los Angeles | 14.1 | 78.8 | 7.1 | 62.9 | 21.3 | 2.7 | 0.1 | 11.1 | 2 |
| 6095251901 | 39.57 | 75.38 | 75-80% | 5072 | Solano | 11.9 | 71.9 | 16.2 | 21.2 | 18.1 | 32.4 | 0.3 | 22.6 | 5.4 |
| 6059088802 | 39.57 | 75.37 | 75-80% | 5551 | Orange | 15.1 | 75.9 | 9 | 32.2 | 14.9 | 1 | 0 | 50.5 | 1.4 |
| 6107000301 | 39.57 | 75.36 | 75-80% | 6717 | Tulare | 16.1 | 71.8 | 12.1 | 57.2 | 39.5 | 0.3 | 0.3 | 1.7 | 1.1 |
| 6071004603 | 39.54 | 75.34 | 75-80% | 5717 | San Bernardino | 15.2 | 76.2 | 8.6 | 45.7 | 30.7 | 15.1 | 0.5 | 5.4 | 2.6 |
| 6053014102 | 39.54 | 75.33 | 75-80% | 2259 | Monterey | 19.9 | 76.2 | 3.9 | 28.3 | 31.7 | 15.4 | 0.4 | 15.9 | 8.3 |
| 6037404301 | 39.53 | 75.32 | 75-80% | 5665 | Los Angeles | 16.7 | 75 | 8.3 | 86.7 | 7.3 | 1.8 | 0.3 | 3.2 | 0.6 |
| 6037199120 | 39.52 | 75.31 | 75-80% | 4086 | Los Angeles | 15 | 71.2 | 13.8 | 72.5 | 2.4 | 1.1 | 0.4 | 23 | 0.6 |
| 6037197200 | 39.52 | 75.29 | 75-80% | 3757 | Los Angeles | 11.1 | 75.6 | 13.3 | 54.5 | 3.3 | 0.6 | 0.2 | 40.2 | 1.1 |
| 6037550202 | 39.52 | 75.28 | 75-80% | 5496 | Los Angeles | 12.8 | 77 | 10.2 | 71.5 | 15.5 | 3.9 | 0.4 | 6.9 | 1.7 |
| 6037503902 | 39.52 | 75.27 | 75-80% | 4636 | Los Angeles | 12.5 | 74 | 13.5 | 44.7 | 39.9 | 2.2 | 0.2 | 11 | 2 |
| 6071001804 | 39.51 | 75.26 | 75-80% | 5145 | San Bernardino | 14.3 | 80.2 | 5.5 | 56.6 | 20.5 | 6.7 | 0.2 | 14.2 | 1.7 |
| 6037117408 | 39.51 | 75.24 | 75-80% | 2830 | Los Angeles | 18.5 | 77.7 | 3.8 | 82.5 | 7.1 | 4.6 | 0 | 4.2 | 1.6 |
| 6073002501 | 39.50 | 75.23 | 75-80% | 5504 | San Diego | 17.1 | 76.6 | 6.3 | 61.9 | 11.6 | 8.8 | 0.1 | 15.3 | 2.2 |
| 6099000807 | 39.50 | 75.22 | 75-80% | 3694 | Stanislaus | 11.8 | 68.2 | 20 | 33.1 | 51 | 2.7 | 0.5 | 9.1 | 3.6 |
| 6047001902 | 39.48 | 75.20 | 75-80% | 2572 | Merced | 16.1 | 72.6 | 11.3 | 68.6 | 28.7 | 0.5 | 0.2 | 1.2 | 0.8 |
| 6077005106 | 39.46 | 75.19 | 75-80% | 6017 | San Joaquin | 15.9 | 74.7 | 9.4 | 32.6 | 48.7 | 4.8 | 0.5 | 9.2 | 4.2 |
| 6065049500 | 39.46 | 75.18 | 75-80% | 8421 | Riverside | 21.9 | 71.2 | 6.9 | 89.6 | 7.4 | 1 | 0.3 | 1.2 | 0.5 |
| 6077000401 | 39.45 | 75.17 | 75-80% | 3043 | San Joaquin | 13 | 74.3 | 12.7 | 38.1 | 43.5 | 7.7 | 1.1 | 5.1 | 4.6 |
| 6037432300 | 39.44 | 75.15 | 75-80% | 3951 | Los Angeles | 12.7 | 75.9 | 11.4 | 52.8 | 10.3 | 0.4 | 0.1 | 35.1 | 1.3 |
| 6037481103 | 39.43 | 75.14 | 75-80% | 5350 | Los Angeles | 10.9 | 74 | 15.1 | 39.3 | 5.9 | 0.4 | 0.2 | 53 | 1.2 |
| 6037219500 | 39.43 | 75.13 | 75-80% | 1737 | Los Angeles | 10 | 68 | 22 | 19.4 | 3.6 | 54.6 | 0.2 | 18.9 | 3.3 |
| 6019004212 | 39.42 | 75.12 | 75-80% | 10762 | Fresno | 17 | 76.8 | 6.2 | 37.7 | 36.5 | 10.7 | 0.7 | 11.2 | 3.3 |
| 6037650901 | 39.42 | 75.10 | 75-80% | 5928 | Los Angeles | 11.5 | 77.9 | 10.6 | 31.7 | 42.9 | 2.5 | 0.2 | 18.6 | 4.1 |
| 6037553000 | 39.41 | 75.09 | 75-80% | 4825 | Los Angeles | 13.8 | 77.5 | 8.7 | 69.9 | 17.6 | 3.7 | 0.2 | 7.4 | 1.3 |
| 6019004001 | 39.41 | 75.08 | 75-80% | 7248 | Fresno | 20.1 | 72.9 | 7 | 65.8 | 25.7 | 0.4 | 0.5 | 6.3 | 1.3 |

| | | | | | | | | | | | | | | |
|---|---|---|---|---|---|---|---|---|---|---|---|---|---|---|
| 6059063604 | 39.41 | 75.07 | 75-80% | 3835 | Orange | 14.9 | 73.7 | 11.4 | 57.7 | 35.9 | 0.8 | 0.1 | 4 | 1.5 |
| 6037543604 | 39.40 | 75.05 | 75-80% | 5620 | Los Angeles | 11.6 | 73.1 | 15.3 | 34.6 | 9.1 | 5.3 | 0.1 | 47.8 | 3.1 |
| 6037302004 | 39.39 | 75.04 | 75-80% | 4214 | Los Angeles | 8.2 | 77.1 | 14.7 | 15.7 | 61.3 | 1.1 | 0.1 | 17.5 | 4.3 |
| 6065042409 | 39.38 | 75.03 | 75-80% | 3299 | Riverside | 15.7 | 78 | 6.3 | 52.3 | 24.1 | 17.5 | 0.2 | 3.5 | 2.4 |
| 6001437200 | 39.37 | 75.02 | 75-80% | 6755 | Alameda | 12.2 | 72.4 | 15.4 | 27.1 | 22.8 | 12 | 0.3 | 33.2 | 4.6 |
| 6037310701 | 39.35 | 75.00 | 75-80% | 2361 | Los Angeles | 7.6 | 69.8 | 22.6 | 16.4 | 66.1 | 1.5 | 0.1 | 12.1 | 3.8 |
| 6029001801 | 39.35 | 74.99 | 70-75% | 5579 | Kern | 14.7 | 71.5 | 13.8 | 39.7 | 43.9 | 9.6 | 0.5 | 3.8 | 2.5 |
| 6037117520 | 39.34 | 74.98 | 70-75% | 4052 | Los Angeles | 21.2 | 76.6 | 2.2 | 86 | 3.8 | 4.1 | 0.1 | 5.2 | 0.8 |
| 6071009913 | 39.33 | 74.97 | 70-75% | 6068 | San Bernardino | 17.3 | 69.3 | 13.4 | 53.3 | 29.3 | 12.4 | 0.5 | 1.7 | 2.9 |
| 6037222700 | 39.32 | 74.95 | 70-75% | 3748 | Los Angeles | 0.1 | 99.8 | 0.1 | 11.6 | 46.6 | 4.2 | 0 | 31.7 | 5.9 |
| 6065043001 | 39.32 | 74.94 | 70-75% | 5593 | Riverside | 15.8 | 76.8 | 7.4 | 60.1 | 32.5 | 3.2 | 0.3 | 1.7 | 2.1 |
| 6065041405 | 39.32 | 74.93 | 70-75% | 4096 | Riverside | 15.3 | 77.4 | 7.3 | 58.8 | 32 | 2.7 | 0.4 | 4.3 | 1.8 |
| 6099003500 | 39.31 | 74.91 | 70-75% | 10720 | Stanislaus | 17.8 | 73.6 | 8.6 | 61.4 | 32.9 | 2 | 0.4 | 1.7 | 1.6 |
| 6037535804 | 39.30 | 74.90 | 70-75% | 5498 | Los Angeles | 18 | 77.5 | 4.5 | 97.5 | 1.7 | 0.3 | 0.1 | 0.1 | 0.3 |
| 6071002101 | 39.30 | 74.89 | 70-75% | 4399 | San Bernardino | 16.9 | 76.5 | 6.6 | 65.1 | 17.9 | 9.9 | 0.4 | 4.8 | 1.8 |
| 6073010013 | 39.27 | 74.88 | 70-75% | 5484 | San Diego | 15.8 | 73.5 | 10.7 | 97.3 | 1.7 | 0.3 | 0.1 | 0.3 | 0.2 |
| 6081602200 | 39.27 | 74.86 | 70-75% | 8084 | San Mateo | 14.8 | 76.8 | 8.4 | 66.6 | 14.4 | 2.6 | 0.2 | 13.4 | 2.7 |
| 6001428700 | 39.27 | 74.85 | 70-75% | 4119 | Alameda | 18.2 | 76.4 | 5.4 | 12 | 34.8 | 14.2 | 1 | 31.2 | 6.7 |
| 6099000203 | 39.25 | 74.84 | 70-75% | 8756 | Stanislaus | 13.8 | 72.2 | 14 | 27.7 | 66.9 | 0.7 | 0.7 | 2.1 | 2 |
| 6037602106 | 39.25 | 74.83 | 70-75% | 5702 | Los Angeles | 13.7 | 78.4 | 7.9 | 55 | 11.2 | 20.2 | 0.3 | 10.6 | 2.8 |
| 6037700102 | 39.25 | 74.81 | 70-75% | 4061 | Los Angeles | 3.4 | 76.9 | 19.7 | 12.8 | 76.1 | 3 | 0.2 | 5.2 | 2.7 |
| 6037207502 | 39.24 | 74.80 | 70-75% | 2589 | Los Angeles | 2.1 | 49.4 | 48.5 | 12.4 | 19.9 | 4.9 | 0.1 | 60.1 | 2.6 |
| 6073014400 | 39.22 | 74.79 | 70-75% | 3523 | San Diego | 15.5 | 73.8 | 10.7 | 41.9 | 23.5 | 26.5 | 0.4 | 4.2 | 3.5 |
| 6037600602 | 39.21 | 74.78 | 70-75% | 2551 | Los Angeles | 19.8 | 75.8 | 4.4 | 62.9 | 0.6 | 33.7 | 0.2 | 0.5 | 2 |
| 6059087505 | 39.21 | 74.76 | 70-75% | 5222 | Orange | 17.9 | 76.2 | 5.9 | 64.3 | 17.8 | 3 | 0.2 | 12.2 | 2.4 |
| 6107003002 | 39.20 | 74.75 | 70-75% | 3519 | Tulare | 22 | 73 | 5 | 72.3 | 19.2 | 5.2 | 0.3 | 1.7 | 1.4 |
| 6037502402 | 39.19 | 74.74 | 70-75% | 3755 | Los Angeles | 12.4 | 75.5 | 12.1 | 93.9 | 4.6 | 0.5 | 0.3 | 0.4 | 0.3 |
| 6039000507 | 39.18 | 74.73 | 70-75% | 10546 | Madera | 18 | 73.8 | 8.2 | 69.1 | 24.4 | 3.3 | 0.5 | 1.5 | 1.2 |
| 6037408004 | 39.18 | 74.71 | 70-75% | 2246 | Los Angeles | 12.7 | 77.8 | 9.5 | 46.1 | 11.8 | 5.1 | 0.2 | 35 | 1.8 |
| 6037190202 | 39.17 | 74.70 | 70-75% | 3044 | Los Angeles | 2.9 | 85.3 | 11.8 | 23.4 | 54.9 | 7.8 | 0.6 | 9.8 | 3.6 |
| 6037301206 | 39.17 | 74.69 | 70-75% | 5363 | Los Angeles | 8.7 | 76.3 | 15 | 8.1 | 68.2 | 0.8 | 0.1 | 17.9 | 4.9 |
| 6065048200 | 39.16 | 74.68 | 70-75% | 4301 | Riverside | 15.5 | 76.9 | 7.6 | 38.6 | 34.8 | 8.3 | 0.4 | 14.8 | 3.2 |
| 6037603801 | 39.16 | 74.66 | 70-75% | 4483 | Los Angeles | 15.7 | 78.6 | 5.7 | 54.7 | 9.7 | 19.5 | 0.2 | 13.8 | 2.2 |
| 6067006800 | 39.15 | 74.65 | 70-75% | 7455 | Sacramento | 20.4 | 73.4 | 6.2 | 53.3 | 18.3 | 11 | 0.5 | 14 | 2.9 |
| 6037188202 | 39.13 | 74.64 | 70-75% | 2347 | Los Angeles | 8 | 74.9 | 17.1 | 12.5 | 66.4 | 3.2 | 0 | 14.8 | 3.1 |
| 6037910101 | 39.11 | 74.62 | 70-75% | 1684 | Los Angeles | 19.2 | 76.3 | 4.5 | 74.3 | 10.5 | 10.2 | 0.2 | 3.3 | 1.5 |
| 6037500900 | 39.09 | 74.61 | 70-75% | 5719 | Los Angeles | 13.1 | 73.3 | 13.6 | 91.1 | 4.9 | 0.6 | 0.2 | 2.7 | 0.5 |
| 6067001800 | 39.08 | 74.60 | 70-75% | 4686 | Sacramento | 12.1 | 79.4 | 8.5 | 24.9 | 44.4 | 17.2 | 0.7 | 7.6 | 5.2 |
| 6031000900 | 39.07 | 74.59 | 70-75% | 8057 | Kings | 18.9 | 69.1 | 12 | 56.3 | 35.2 | 3.9 | 0.9 | 1.7 | 2 |
| 6037407501 | 39.07 | 74.57 | 70-75% | 4411 | Los Angeles | 16.7 | 75.2 | 8.1 | 81.5 | 5.1 | 2.2 | 0.2 | 9.8 | 1.1 |
| 6059087902 | 39.06 | 74.56 | 70-75% | 6039 | Orange | 16.1 | 75.5 | 8.4 | 63 | 12.4 | 0.5 | 0.1 | 22.6 | 1.3 |
| 6085501502 | 39.06 | 74.55 | 70-75% | 4549 | Santa Clara | 18.6 | 75.7 | 5.7 | 70 | 11.4 | 1.4 | 0.2 | 15.1 | 1.8 |
| 6019005304 | 39.05 | 74.54 | 70-75% | 5305 | Fresno | 13.8 | 79.3 | 6.9 | 44.4 | 32.4 | 7.6 | 0.6 | 12.2 | 2.8 |
| 6039000508 | 39.04 | 74.52 | 70-75% | 6878 | Madera | 15.5 | 75.2 | 9.3 | 59.3 | 35.4 | 2 | 0.8 | 1.5 | 1 |
| 6075023001 | 39.04 | 74.51 | 70-75% | 5216 | San Francisco | 9.5 | 76 | 14.5 | 15 | 5.4 | 14 | 0.1 | 63.8 | 1.6 |
| 6013306002 | 39.04 | 74.50 | 70-75% | 2985 | Contra Costa | 12.1 | 73.9 | 14 | 33 | 49.8 | 9.1 | 0.3 | 3.8 | 4 |
| 6025011202 | 39.03 | 74.49 | 70-75% | 5444 | Imperial | 18.3 | 71 | 10.7 | 86.7 | 9.6 | 1.7 | 0.2 | 1.3 | 0.5 |
| 6101050202 | 39.01 | 74.47 | 70-75% | 4037 | Sutter | 19.5 | 73.7 | 6.8 | 52.1 | 39.3 | 2.3 | 1.5 | 2.1 | 2.8 |
| 6067007501 | 39.01 | 74.46 | 70-75% | 6067 | Sacramento | 14.7 | 73.9 | 11.4 | 18.5 | 64.2 | 8 | 0.8 | 4.4 | 4.1 |
| 6037602301 | 39.00 | 74.45 | 70-75% | 6265 | Los Angeles | 12.7 | 76.4 | 10.9 | 54.8 | 29.4 | 3.6 | 0.2 | 8.7 | 3.3 |
| 6065041202 | 39.00 | 74.44 | 70-75% | 4458 | Riverside | 18.1 | 74.8 | 7.1 | 81.9 | 14.1 | 1.1 | 0.2 | 2 | 0.7 |
| 6037554521 | 39.00 | 74.42 | 70-75% | 5752 | Los Angeles | 8.5 | 70.8 | 20.7 | 16.9 | 25 | 9.4 | 0.1 | 45.6 | 2.9 |
| 6037104620 | 39.00 | 74.41 | 70-75% | 3539 | Los Angeles | 16.5 | 74.8 | 8.7 | 96.6 | 2 | 0.3 | 0.5 | 0.3 | 0.2 |
| 6037408303 | 38.99 | 74.40 | 70-75% | 4029 | Los Angeles | 12.7 | 73.5 | 13.8 | 77.2 | 11.6 | 1.1 | 0.1 | 9 | 0.9 |
| 6071003507 | 38.98 | 74.39 | 70-75% | 4887 | San Bernardino | 15.9 | 76.7 | 7.4 | 69.4 | 11.2 | 14.5 | 0.4 | 2.6 | 2 |
| 6037270200 | 38.98 | 74.37 | 70-75% | 3761 | Los Angeles | 11.8 | 79.2 | 9 | 58.7 | 20.2 | 9.8 | 0.1 | 8.2 | 3 |
| 6099000503 | 38.96 | 74.36 | 70-75% | 4930 | Stanislaus | 15.2 | 77.8 | 7 | 34.9 | 46.6 | 4.9 | 0.4 | 8 | 5.1 |
| 6031000100 | 38.95 | 74.35 | 70-75% | 3457 | Kings | 15.1 | 72.2 | 12.7 | 38.2 | 57.8 | 0.5 | 0.4 | 1.5 | 1.6 |
| 6037212204 | 38.95 | 74.33 | 70-75% | 3344 | Los Angeles | 14 | 77.2 | 8.8 | 75.3 | 4.5 | 4 | 0 | 15.5 | 0.7 |
| 6037573401 | 38.94 | 74.32 | 70-75% | 1439 | Los Angeles | 14.9 | 76.3 | 8.8 | 38.2 | 27.4 | 10.8 | 0.4 | 19.2 | 4 |
| 6099000402 | 38.92 | 74.31 | 70-75% | 10095 | Stanislaus | 17 | 73.2 | 9.8 | 34 | 54.1 | 2 | 0.4 | 6.3 | 3.2 |
| 6047000603 | 38.91 | 74.30 | 70-75% | 6143 | Merced | 19.3 | 71.2 | 9.5 | 56.5 | 33.8 | 4.3 | 0.6 | 3 | 1.8 |
| 6037188300 | 38.91 | 74.28 | 70-75% | 3536 | Los Angeles | 9 | 73.5 | 17.5 | 31.5 | 36.3 | 0.8 | 0.1 | 28.6 | 2.8 |
| 6037192420 | 38.91 | 74.27 | 70-75% | 3637 | Los Angeles | 9.7 | 81.2 | 9.1 | 45.1 | 11.1 | 2.5 | 0.2 | 39.2 | 1.9 |
| 6107002400 | 38.89 | 74.26 | 70-75% | 11470 | Tulare | 18.7 | 74.2 | 7.1 | 44.1 | 46.9 | 1.9 | 0.7 | 4.2 | 2.3 |
| 6037124300 | 38.88 | 74.25 | 70-75% | 4046 | Los Angeles | 13.1 | 78.6 | 8.3 | 69.6 | 22 | 2.5 | 0.2 | 4.4 | 1.3 |

| | | | | | | | | | | | | | | | |
|---|---|---|---|---|---|---|---|---|---|---|---|---|---|---|---|
| 6053000502 | 38.85 | 74.23 | 70-75% | 4161 | Monterey | 18.8 | 72.3 | 8.9 | 86.6 | 8.8 | 0.2 | 0.2 | 3.3 | 0.9 |
| 6067009005 | 38.83 | 74.22 | 70-75% | 3165 | Sacramento | 13.2 | 76.5 | 10.3 | 20.3 | 53.6 | 10 | 0.7 | 9.3 | 6 |
| 6071000504 | 38.83 | 74.21 | 70-75% | 5450 | San Bernardino | 11.9 | 80.2 | 7.9 | 55.2 | 32.4 | 3.3 | 0.2 | 7.6 | 1.3 |
| 6065041404 | 38.82 | 74.20 | 70-75% | 3725 | Riverside | 14.8 | 78.2 | 7 | 58.2 | 27.5 | 3.5 | 0.8 | 7.7 | 2.2 |
| 6071007800 | 38.82 | 74.18 | 70-75% | 4912 | San Bernardino | 14.7 | 80.6 | 4.7 | 28.5 | 44.2 | 7.6 | 0.4 | 15.9 | 3.5 |
| 6059087200 | 38.82 | 74.17 | 70-75% | 7643 | Orange | 13.7 | 74.7 | 11.6 | 61 | 27.3 | 2.5 | 0.2 | 7.4 | 1.5 |
| 6013314102 | 38.81 | 74.16 | 70-75% | 5923 | Contra Costa | 16 | 76.9 | 7.1 | 54.3 | 18.3 | 11.4 | 0.2 | 12.1 | 3.6 |
| 6037139302 | 38.81 | 74.15 | 70-75% | 4422 | Los Angeles | 10.4 | 79.1 | 10.5 | 27.1 | 49.4 | 9.2 | 0.3 | 9.5 | 4.5 |
| 6077003311 | 38.80 | 74.13 | 70-75% | 3303 | San Joaquin | 17.5 | 72.9 | 9.6 | 37.5 | 25.7 | 15.1 | 0.6 | 16.5 | 4.7 |
| 6037113321 | 38.77 | 74.12 | 70-75% | 5473 | Los Angeles | 11.2 | 81 | 7.8 | 33 | 38.2 | 5.5 | 0.3 | 20 | 3.1 |
| 6037131800 | 38.76 | 74.11 | 70-75% | 5341 | Los Angeles | 14.1 | 76.7 | 9.2 | 56.7 | 23.7 | 2.6 | 0.3 | 14.6 | 2.1 |
| 6085504319 | 38.76 | 74.10 | 70-75% | 6936 | Santa Clara | 14.4 | 75.9 | 9.7 | 18.4 | 10.2 | 2.2 | 0.3 | 66.5 | 2.5 |
| 6013315000 | 38.74 | 74.08 | 70-75% | 3281 | Contra Costa | 12.7 | 80.9 | 6.4 | 23 | 44.2 | 7.5 | 0.6 | 19.7 | 5 |
| 6099000910 | 38.71 | 74.07 | 70-75% | 6585 | Stanislaus | 15.3 | 72.6 | 12.1 | 32.2 | 51.9 | 5.6 | 0.6 | 4.9 | 4.8 |
| 6037554511 | 38.70 | 74.06 | 70-75% | 4029 | Los Angeles | 9.5 | 76 | 14.5 | 9.9 | 12.5 | 4.9 | 0 | 70.1 | 2.6 |
| 6077005113 | 38.70 | 74.04 | 70-75% | 6156 | San Joaquin | 13.9 | 69.9 | 16.2 | 32.5 | 48.6 | 5.2 | 0.6 | 8.8 | 4.3 |
| 6071004404 | 38.69 | 74.03 | 70-75% | 5570 | San Bernardino | 20.7 | 72.8 | 6.5 | 76.8 | 11.3 | 7.4 | 0.4 | 2.8 | 1.3 |
| 6085503112 | 38.66 | 74.02 | 70-75% | 4025 | Santa Clara | 14.4 | 78.7 | 6.9 | 59.8 | 14.5 | 2.9 | 0.2 | 20.5 | 2.1 |
| 6095253500 | 38.66 | 74.01 | 70-75% | 8423 | Solano | 8.7 | 61.7 | 29.6 | 17.2 | 70 | 4.8 | 0.5 | 4.8 | 2.6 |
| 6071000304 | 38.66 | 73.99 | 70-75% | 5871 | San Bernardino | 15.7 | 76.8 | 7.5 | 62.8 | 15.1 | 4.2 | 0.4 | 15.4 | 2.1 |
| 6073015902 | 38.65 | 73.98 | 70-75% | 5220 | San Diego | 17 | 75.9 | 7.1 | 35.2 | 50.4 | 6.9 | 0.4 | 2.9 | 4.2 |
| 6037404903 | 38.64 | 73.97 | 70-75% | 2905 | Los Angeles | 15.5 | 76.4 | 8.1 | 74.7 | 5.5 | 1.3 | 0.1 | 18.1 | 0.3 |
| 6037482303 | 38.63 | 73.96 | 70-75% | 5818 | Los Angeles | 12.3 | 77.7 | 10 | 35.3 | 2.6 | 0.1 | 0.1 | 61.5 | 0.4 |
| 6037406701 | 38.62 | 73.94 | 70-75% | 3246 | Los Angeles | 12.4 | 75.3 | 12.3 | 60.5 | 13.3 | 6 | 0.2 | 18 | 1.9 |
| 6025012400 | 38.61 | 73.93 | 70-75% | 1266 | Imperial | 3.5 | 48.9 | 47.6 | 18.3 | 73 | 3.7 | 1.5 | 0.5 | 3 |
| 6029003205 | 38.60 | 73.92 | 70-75% | 8998 | Kern | 18.2 | 76.6 | 5.2 | 56 | 22.6 | 7.3 | 0.2 | 11.8 | 2.1 |
| 6037119342 | 38.58 | 73.91 | 70-75% | 3180 | Los Angeles | 17.1 | 78.6 | 4.3 | 80.2 | 4.7 | 3.5 | 0.3 | 10 | 1.2 |
| 6037203710 | 38.57 | 73.89 | 70-75% | 3259 | Los Angeles | 16.2 | 75.9 | 7.9 | 97.2 | 0.8 | 0.7 | 0.2 | 0.8 | 0.3 |
| 6077003307 | 38.57 | 73.88 | 70-75% | 4559 | San Joaquin | 16.3 | 69.2 | 14.5 | 38.1 | 29.7 | 11.7 | 0.3 | 15.6 | 4.5 |
| 6037535701 | 38.56 | 73.87 | 70-75% | 6050 | Los Angeles | 16.4 | 76.4 | 7.2 | 97.1 | 2.1 | 0.1 | 0 | 0.4 | 0.3 |
| 6029001103 | 38.56 | 73.86 | 70-75% | 4782 | Kern | 23.8 | 72.5 | 3.7 | 86.5 | 7.9 | 3 | 1.2 | 0.5 | 0.9 |
| 6095252402 | 38.53 | 73.84 | 70-75% | 5238 | Solano | 17.1 | 75.7 | 7.2 | 42.2 | 26.5 | 13 | 0.5 | 12.4 | 5.5 |
| 6037212202 | 38.51 | 73.83 | 70-75% | 3612 | Los Angeles | 15 | 79.4 | 5.6 | 79.4 | 2.3 | 2 | 0.2 | 15.4 | 0.6 |
| 6071001903 | 38.50 | 73.82 | 70-75% | 8028 | San Bernardino | 14.1 | 82.7 | 3.2 | 34 | 30.3 | 9.9 | 0.7 | 21.8 | 3.3 |
| 6029006303 | 38.49 | 73.81 | 70-75% | 6784 | Kern | 24 | 71.7 | 4.3 | 93.8 | 4 | 0.5 | 0.3 | 0.4 | 0.9 |
| 6037600912 | 38.48 | 73.79 | 70-75% | 5517 | Los Angeles | 15.8 | 77.8 | 6.4 | 76.4 | 2.8 | 18.3 | 0.2 | 0.8 | 1.5 |
| 6037183620 | 38.47 | 73.78 | 70-75% | 3264 | Los Angeles | 15.4 | 76.6 | 8 | 73.8 | 12.4 | 1.1 | 0.4 | 10.9 | 1.4 |
| 6059086301 | 38.47 | 73.77 | 70-75% | 7474 | Orange | 14.6 | 76.1 | 9.3 | 73 | 17.3 | 1.1 | 0.1 | 7.6 | 0.9 |
| 6067007503 | 38.46 | 73.75 | 70-75% | 4912 | Sacramento | 15.5 | 74.7 | 9.8 | 13.9 | 59.7 | 13.8 | 1.5 | 5.6 | 5.4 |
| 6037119700 | 38.45 | 73.74 | 70-75% | 5045 | Los Angeles | 11.8 | 74.7 | 13.5 | 47.4 | 26.8 | 1.5 | 0.2 | 22.4 | 1.8 |
| 6037131100 | 38.45 | 73.73 | 70-75% | 3252 | Los Angeles | 12.3 | 75.8 | 11.9 | 42.7 | 42.8 | 4 | 0.3 | 8.1 | 2.2 |
| 6065042621 | 38.44 | 73.72 | 70-75% | 6556 | Riverside | 16.9 | 77.3 | 5.8 | 54.3 | 14.2 | 18.4 | 0.4 | 9.6 | 3 |
| 6037600501 | 38.44 | 73.70 | 70-75% | 2478 | Los Angeles | 10.8 | 70.8 | 18.4 | 13.4 | 1.1 | 81.8 | 0 | 1 | 2.6 |
| 6059075004 | 38.43 | 73.69 | 70-75% | 5245 | Orange | 25.6 | 72.7 | 1.7 | 94.4 | 3.9 | 0.6 | 0 | 0.7 | 0.3 |
| 6019004801 | 38.41 | 73.68 | 70-75% | 4604 | Fresno | 20.6 | 72.6 | 6.8 | 58.1 | 27.1 | 8.7 | 0.9 | 2.8 | 2.4 |
| 6077003216 | 38.40 | 73.67 | 70-75% | 2725 | San Joaquin | 14 | 73.5 | 12.5 | 31.6 | 35.5 | 11.9 | 0.5 | 16.4 | 4 |
| 6037600201 | 38.40 | 73.65 | 70-75% | 4600 | Los Angeles | 18.4 | 75.4 | 6.2 | 60.3 | 0.6 | 37.6 | 0 | 0.4 | 1.1 |
| 6059001303 | 38.38 | 73.64 | 70-75% | 5752 | Orange | 14.5 | 77.4 | 8.1 | 63.3 | 23.8 | 1.2 | 0.2 | 9.4 | 2 |
| 6073013103 | 38.32 | 73.63 | 70-75% | 2668 | San Diego | 14.7 | 75.7 | 9.6 | 79.8 | 12.2 | 2.3 | 0.4 | 4.5 | 0.9 |
| 6065043813 | 38.31 | 73.62 | 70-75% | 4340 | Riverside | 16.6 | 73 | 10.4 | 36.1 | 41 | 3.7 | 12.4 | 2.6 | 4.2 |
| 6085501000 | 38.30 | 73.60 | 70-75% | 4769 | Santa Clara | 10.9 | 77.1 | 12 | 52.5 | 22.7 | 3.4 | 0.4 | 18.3 | 2.7 |
| 6083002502 | 38.30 | 73.59 | 70-75% | 7345 | Santa Barbara | 18.8 | 73 | 8.2 | 85.1 | 9.9 | 0.7 | 0.3 | 2.6 | 1.5 |
| 6037117201 | 38.29 | 73.58 | 70-75% | 4352 | Los Angeles | 15.8 | 73.9 | 10.3 | 66.1 | 13.3 | 5.1 | 0.1 | 12.9 | 2.5 |
| 6037221402 | 38.28 | 73.57 | 70-75% | 2715 | Los Angeles | 12.5 | 71.7 | 15.8 | 49 | 8.4 | 28.4 | 0.2 | 11.8 | 2.3 |
| 6065043317 | 38.25 | 73.55 | 70-75% | 8526 | Riverside | 17.7 | 71.4 | 10.9 | 38.4 | 44 | 7.4 | 0.4 | 6 | 3.8 |
| 6037481606 | 38.25 | 73.54 | 70-75% | 4871 | Los Angeles | 9.9 | 76.7 | 13.4 | 19.7 | 4.8 | 0.8 | 0.1 | 73.4 | 1.1 |
| 6037408006 | 38.25 | 73.53 | 70-75% | 3863 | Los Angeles | 13.4 | 79.4 | 7.2 | 43.3 | 5.3 | 5.9 | 0.2 | 43 | 2.4 |
| 6001438100 | 38.23 | 73.51 | 70-75% | 7675 | Alameda | 15.1 | 76.5 | 8.4 | 44.2 | 19.6 | 7.9 | 0.4 | 24.2 | 3.7 |
| 6065042903 | 38.21 | 73.50 | 70-75% | 5738 | Riverside | 17.4 | 73.8 | 8.8 | 72.4 | 18.3 | 7.2 | 0.4 | 0.8 | 0.9 |
| 6085503208 | 38.20 | 73.49 | 70-75% | 3985 | Santa Clara | 16.9 | 75.9 | 7.2 | 65 | 7.6 | 2.9 | 0.4 | 22.7 | 1.4 |
| 6037132300 | 38.19 | 73.48 | 70-75% | 6494 | Los Angeles | 12.9 | 76.3 | 10.8 | 54.8 | 25.7 | 2.9 | 0.3 | 11.8 | 4.4 |
| 6065040605 | 38.18 | 73.46 | 70-75% | 3543 | Riverside | 18.7 | 75.7 | 5.6 | 82.5 | 15.7 | 0.2 | 0.1 | 0.8 | 0.7 |
| 6001402800 | 38.17 | 73.45 | 70-75% | 3345 | Alameda | 7.5 | 75.8 | 16.7 | 8.3 | 23.7 | 41.2 | 0.6 | 21.5 | 4.8 |
| 6077001102 | 38.17 | 73.44 | 70-75% | 4889 | San Joaquin | 15.4 | 72.5 | 12.1 | 43 | 40.4 | 6.9 | 0.5 | 5.1 | 4.1 |
| 6037535502 | 38.17 | 73.43 | 70-75% | 4958 | Los Angeles | 17.2 | 75.3 | 7.5 | 96.5 | 2.4 | 0.3 | 0.1 | 0.3 | 0.4 |
| 6047001200 | 38.16 | 73.41 | 70-75% | 5023 | Merced | 14 | 68.7 | 17.3 | 32.8 | 51.8 | 3.9 | 0.8 | 7.4 | 3.3 |

| | | | | | | | | | | | | | | |
|---|---|---|---|---|---|---|---|---|---|---|---|---|---|---|
| 6037920023 | 38.14 | 73.40 | 70-75% | 2598 | Los Angeles | 12.2 | 78.2 | 9.6 | 48.8 | 45.1 | 1.8 | 0.2 | 1.7 | 2.4 |
| 6037104500 | 38.13 | 73.39 | 70-75% | 3293 | Los Angeles | 18.4 | 73.1 | 8.5 | 95.3 | 3.2 | 0.6 | 0 | 0.8 | 0.1 |
| 6037481001 | 38.13 | 73.38 | 70-75% | 3842 | Los Angeles | 8 | 71.2 | 20.8 | 30.5 | 13.4 | 0.9 | 0.2 | 53.8 | 1.2 |
| 6047001402 | 38.12 | 73.36 | 70-75% | 4277 | Merced | 14.9 | 72.8 | 12.3 | 44.5 | 43.9 | 3.4 | 0.9 | 5.7 | 1.7 |
| 6037106112 | 38.12 | 73.35 | 70-75% | 5969 | Los Angeles | 14 | 76.9 | 9.1 | 68.6 | 16.9 | 3.6 | 0.3 | 9.1 | 1.6 |
| 6037604001 | 38.10 | 73.34 | 70-75% | 4470 | Los Angeles | 15.1 | 78.6 | 6.3 | 64.7 | 17.6 | 8.6 | 0.2 | 7 | 1.9 |
| 6073020500 | 38.10 | 73.33 | 70-75% | 5196 | San Diego | 17.8 | 71.2 | 11 | 69.2 | 25 | 0.9 | 0.2 | 3.3 | 1.4 |
| 6077005501 | 38.10 | 73.31 | 70-75% | 5268 | San Joaquin | 2.9 | 91.3 | 5.8 | 28.2 | 47.2 | 18.7 | 1.1 | 1.3 | 3.7 |
| 6037115104 | 38.09 | 73.30 | 70-75% | 4444 | Los Angeles | 7.8 | 83 | 9.2 | 22.6 | 43.1 | 8.1 | 0.2 | 21.8 | 4.2 |
| 6107000701 | 38.08 | 73.29 | 70-75% | 2635 | Tulare | 17.2 | 73.6 | 9.2 | 72.2 | 24.4 | 0.5 | 0.5 | 0.6 | 1.7 |
| 6037217100 | 38.08 | 73.28 | 70-75% | 5374 | Los Angeles | 11.2 | 78.1 | 10.7 | 37.9 | 20 | 33.2 | 0.4 | 4.6 | 4 |
| 6037407502 | 38.08 | 73.26 | 70-75% | 3937 | Los Angeles | 15.1 | 76.2 | 8.7 | 80.4 | 7.1 | 0.9 | 0.1 | 10.9 | 0.6 |
| 6059074802 | 38.07 | 73.25 | 70-75% | 5845 | Orange | 19.7 | 75.2 | 5.1 | 90.6 | 2.9 | 1.2 | 0.3 | 4.6 | 0.4 |
| 6037104201 | 38.07 | 73.24 | 70-75% | 4780 | Los Angeles | 17.8 | 76.5 | 5.7 | 89.8 | 1 | 8.1 | 0.1 | 0.1 | 0.8 |
| 6067007424 | 38.07 | 73.22 | 70-75% | 3508 | Sacramento | 16.6 | 76.4 | 7 | 21.5 | 49.4 | 16 | 0.8 | 5.8 | 6.6 |
| 6107002601 | 38.06 | 73.21 | 70-75% | 4218 | Tulare | 21.4 | 69.7 | 8.9 | 87.6 | 11 | 0.2 | 0.4 | 0.5 | 0.3 |
| 6085512604 | 38.05 | 73.20 | 70-75% | 4505 | Santa Clara | 18.9 | 71.6 | 9.5 | 83.3 | 12.1 | 1.2 | 0.6 | 1.6 | 1.2 |
| 6037236400 | 38.03 | 73.19 | 70-75% | 4113 | Los Angeles | 9.2 | 70.8 | 20 | 6.1 | 2.9 | 85 | 0.1 | 1.5 | 4.4 |
| 6055200301 | 38.02 | 73.17 | 70-75% | 5095 | Napa | 16.2 | 75.8 | 8 | 48.7 | 46.7 | 0.5 | 0.2 | 2.1 | 1.8 |
| 6037190301 | 38.02 | 73.16 | 70-75% | 4758 | Los Angeles | 4.7 | 82.9 | 12.4 | 24.4 | 60.1 | 4.9 | 0.1 | 6.9 | 3.5 |
| 6059074601 | 38.02 | 73.15 | 70-75% | 8286 | Orange | 18.3 | 76.9 | 4.8 | 92.1 | 6.1 | 0.2 | 0.1 | 1.2 | 0.3 |
| 6037310702 | 38.02 | 73.14 | 70-75% | 7104 | Los Angeles | 7.1 | 72.4 | 20.5 | 14.5 | 65.3 | 3.5 | 0.2 | 12.6 | 4 |
| 6037501200 | 38.01 | 73.12 | 70-75% | 5057 | Los Angeles | 14.5 | 74.9 | 10.6 | 81.4 | 14.6 | 0.4 | 0.2 | 2.2 | 1.2 |
| 6059088902 | 38.00 | 73.11 | 70-75% | 5143 | Orange | 12.1 | 76.9 | 11 | 28.3 | 10.1 | 0.6 | 0.1 | 59.5 | 1.5 |
| 6065042210 | 37.96 | 73.10 | 70-75% | 4761 | Riverside | 10.4 | 87.5 | 2.1 | 39 | 23 | 14.3 | 0.3 | 19.7 | 3.7 |
| 6037550601 | 37.95 | 73.09 | 70-75% | 5639 | Los Angeles | 15.2 | 74.3 | 10.5 | 71.6 | 15.5 | 3.1 | 0.2 | 8.7 | 0.9 |
| 6073012401 | 37.94 | 73.07 | 70-75% | 3676 | San Diego | 14.9 | 75.3 | 9.8 | 67.1 | 18 | 6 | 0.4 | 6.3 | 2.2 |
| 6065031402 | 37.93 | 73.06 | 70-75% | 6518 | Riverside | 14.1 | 73.3 | 12.6 | 47.6 | 40.2 | 6 | 0.7 | 2.9 | 2.6 |
| 6067004300 | 37.93 | 73.05 | 70-75% | 9553 | Sacramento | 18 | 74.8 | 7.2 | 26.9 | 9.6 | 22.4 | 0.5 | 35.2 | 5.4 |
| 6013369001 | 37.91 | 73.04 | 70-75% | 6246 | Contra Costa | 13.1 | 69.5 | 17.4 | 40.7 | 15.3 | 23.5 | 0.3 | 16.4 | 3.8 |
| 6059075403 | 37.91 | 73.02 | 70-75% | 7081 | Orange | 13 | 77.3 | 9.7 | 64.7 | 25.2 | 2.2 | 0.2 | 6.4 | 1.3 |
| 6037552800 | 37.91 | 73.01 | 70-75% | 6401 | Los Angeles | 16 | 77.2 | 6.8 | 72.1 | 12.5 | 3.3 | 0.1 | 11 | 1 |
| 6037131300 | 37.90 | 73.00 | 70-75% | 4902 | Los Angeles | 12.2 | 77.8 | 10 | 62.4 | 20.9 | 2 | 0.2 | 12.6 | 1.9 |
| 6037183820 | 37.88 | 72.99 | 70-75% | 3464 | Los Angeles | 17.5 | 77.4 | 5.1 | 88.1 | 5.1 | 1.6 | 0.1 | 4.3 | 0.7 |
| 6037211410 | 37.87 | 72.97 | 70-75% | 3095 | Los Angeles | 11.2 | 79 | 9.8 | 36 | 6.6 | 3.4 | 0 | 53.1 | 0.9 |
| 6077005405 | 37.83 | 72.96 | 70-75% | 3417 | San Joaquin | 17.3 | 75.2 | 7.5 | 51.5 | 27.2 | 8.2 | 0.3 | 8.2 | 4.7 |
| 6037134104 | 37.83 | 72.95 | 70-75% | 4322 | Los Angeles | 13.2 | 79.4 | 7.4 | 42.9 | 19.8 | 6 | 0 | 28.4 | 2.9 |
| 6037430102 | 37.83 | 72.93 | 70-75% | 4809 | Los Angeles | 14.6 | 75.1 | 10.3 | 74.7 | 11.3 | 4.4 | 0.3 | 8 | 1.3 |
| 6065031703 | 37.82 | 72.92 | 70-75% | 3611 | Riverside | 14.5 | 78.4 | 7.1 | 49.6 | 37.7 | 4.3 | 0.5 | 5.9 | 1.9 |
| 6037201602 | 37.82 | 72.91 | 70-75% | 2840 | Los Angeles | 13.3 | 74.6 | 12.1 | 84.1 | 4.5 | 0.6 | 0 | 10.5 | 0.3 |
| 6029002817 | 37.81 | 72.90 | 70-75% | 5173 | Kern | 19.4 | 74.3 | 6.3 | 41.6 | 35.5 | 15.6 | 1 | 2.9 | 3.4 |
| 6037212303 | 37.81 | 72.88 | 70-75% | 3326 | Los Angeles | 14.8 | 81.7 | 3.5 | 69.5 | 6.6 | 5.1 | 0.2 | 17 | 1.6 |
| 6069000400 | 37.81 | 72.87 | 70-75% | 5975 | San Benito | 16.5 | 74.3 | 9.2 | 73.4 | 24 | 0.8 | 0.2 | 0.7 | 1 |
| 6037125200 | 37.80 | 72.86 | 70-75% | 3524 | Los Angeles | 9.6 | 82.3 | 8.1 | 30 | 54.5 | 5.1 | 0.7 | 6.2 | 3.5 |
| 6065040815 | 37.79 | 72.85 | 70-75% | 3586 | Riverside | 13 | 80.8 | 6.2 | 34 | 27.9 | 11.2 | 0.2 | 23.6 | 3.1 |
| 6037482304 | 37.78 | 72.83 | 70-75% | 3556 | Los Angeles | 13.7 | 75.5 | 10.8 | 45.8 | 2.2 | 0.1 | 0 | 51.5 | 0.4 |
| 6107002500 | 37.77 | 72.82 | 70-75% | 3778 | Tulare | 17.6 | 71.7 | 10.7 | 63.8 | 32.5 | 0.3 | 0.3 | 1.7 | 1.4 |
| 6059086903 | 37.76 | 72.81 | 70-75% | 6861 | Orange | 16.9 | 75.2 | 7.9 | 53.4 | 22.8 | 4 | 0.1 | 17.4 | 2.3 |
| 6037600202 | 37.74 | 72.80 | 70-75% | 6205 | Los Angeles | 17.2 | 75.3 | 7.5 | 51.5 | 1 | 45.5 | 0.2 | 0.4 | 1.3 |
| 6073015802 | 37.74 | 72.78 | 70-75% | 4673 | San Diego | 13.4 | 72 | 14.6 | 32 | 51.8 | 6.6 | 0.7 | 3.6 | 5.3 |
| 6037135114 | 37.74 | 72.77 | 70-75% | 4445 | Los Angeles | 9.5 | 73.8 | 16.7 | 12.7 | 51.2 | 5.1 | 0.3 | 26.7 | 4.1 |
| 6059099702 | 37.74 | 72.76 | 70-75% | 8182 | Orange | 12 | 74.2 | 13.8 | 21.3 | 25.6 | 1 | 0.3 | 49.7 | 2.2 |
| 6073012700 | 37.72 | 72.75 | 70-75% | 4955 | San Diego | 13.9 | 75.1 | 11 | 71.1 | 16.4 | 5 | 0.3 | 5.2 | 2 |
| 6059088602 | 37.72 | 72.73 | 70-75% | 4433 | Orange | 12.7 | 76.6 | 10.7 | 36.7 | 23.1 | 1.3 | 0.2 | 37.2 | 1.6 |
| 6037480304 | 37.71 | 72.72 | 70-75% | 4098 | Los Angeles | 8.5 | 76.7 | 14.8 | 27.6 | 7.5 | 2.7 | 0.2 | 59.6 | 2.4 |
| 6055200503 | 37.66 | 72.71 | 70-75% | 1769 | Napa | 13.8 | 80.2 | 6 | 47.3 | 48.9 | 0.2 | 0.4 | 1 | 2.3 |
| 6101050201 | 37.64 | 72.70 | 70-75% | 3249 | Sutter | 18.2 | 71.6 | 10.2 | 43.4 | 41.6 | 1.7 | 1.3 | 8.5 | 3.5 |
| 6013366001 | 37.63 | 72.68 | 70-75% | 4307 | Contra Costa | 14.9 | 76.3 | 8.8 | 56 | 9.4 | 13.4 | 0.2 | 18.4 | 2.5 |
| 6025011802 | 37.63 | 72.67 | 70-75% | 4870 | Imperial | 13.6 | 72.3 | 14.1 | 73.1 | 20.7 | 2.4 | 0.5 | 2.6 | 0.8 |
| 6037218701 | 37.63 | 72.66 | 70-75% | 2430 | Los Angeles | 13.9 | 75.8 | 10.3 | 42.3 | 5 | 41.7 | 0.4 | 7.3 | 3.3 |
| 6071011700 | 37.62 | 72.64 | 70-75% | 1768 | San Bernardino | 14.4 | 72.5 | 13.1 | 48.5 | 45.1 | 1.5 | 1 | 1.6 | 2.4 |
| 6037117407 | 37.61 | 72.63 | 70-75% | 3636 | Los Angeles | 22.3 | 75.9 | 1.8 | 92.9 | 1.7 | 2.3 | 0 | 2.5 | 0.6 |
| 6001407500 | 37.59 | 72.62 | 70-75% | 3931 | Alameda | 18.9 | 73.4 | 7.7 | 49.5 | 3.4 | 37.3 | 0.2 | 7.6 | 2.1 |
| 6037320202 | 37.58 | 72.61 | 70-75% | 5797 | Los Angeles | 14.8 | 76.5 | 8.7 | 89.5 | 7.5 | 0.5 | 0.4 | 1.4 | 0.7 |
| 6071002703 | 37.56 | 72.59 | 70-75% | 5780 | San Bernardino | 14.9 | 79.4 | 5.7 | 49.2 | 26.1 | 18.4 | 0.1 | 4 | 2.2 |
| 6037186302 | 37.56 | 72.58 | 70-75% | 5198 | Los Angeles | 11.9 | 77.3 | 10.8 | 55.1 | 21.1 | 1.9 | 0.2 | 19.4 | 2.3 |

| | | | | | | | | | | | | | | | |
|---|---|---|---|---|---|---|---|---|---|---|---|---|---|---|---|
| 6047000202 | 37.54 | 72.57 | 70-75% | 1841 | Merced | 18.4 | 72.6 | 9 | 63.7 | 31.7 | 0.2 | 0.4 | 3 | 1.1 |
| 6107002003 | 37.53 | 72.56 | 70-75% | 5663 | Tulare | 14.1 | 72.7 | 13.2 | 38.8 | 53 | 2.2 | 0.9 | 2.5 | 2.6 |
| 6107002904 | 37.52 | 72.54 | 70-75% | 5002 | Tulare | 18.8 | 73.3 | 7.9 | 54.1 | 38.6 | 3.9 | 0.5 | 0.8 | 2.1 |
| 6085503121 | 37.51 | 72.53 | 70-75% | 4499 | Santa Clara | 15 | 76.6 | 8.4 | 56.4 | 19.2 | 6.9 | 0.5 | 15 | 1.9 |
| 6019008100 | 37.50 | 72.52 | 70-75% | 5691 | Fresno | 18.4 | 74.8 | 6.8 | 60.3 | 33.4 | 1.7 | 0.4 | 3.1 | 1.1 |
| 6067006102 | 37.48 | 72.51 | 70-75% | 3114 | Sacramento | 9.7 | 71.5 | 18.8 | 16.1 | 63.9 | 9.3 | 0.5 | 5.4 | 4.7 |
| 6071001703 | 37.47 | 72.49 | 70-75% | 5979 | San Bernardino | 13.2 | 78 | 8.8 | 49.2 | 34.3 | 4.3 | 0.4 | 9.9 | 2 |
| 6037301204 | 37.45 | 72.48 | 70-75% | 4990 | Los Angeles | 9.4 | 75.4 | 15.2 | 11.4 | 62.7 | 3 | 0 | 18.8 | 4.1 |
| 6085503710 | 37.44 | 72.47 | 70-75% | 3599 | Santa Clara | 19.2 | 69 | 11.8 | 70.8 | 3.4 | 2.3 | 0.1 | 22 | 1.3 |
| 6037402703 | 37.43 | 72.46 | 70-75% | 4686 | Los Angeles | 14.6 | 78 | 7.4 | 68.5 | 12.3 | 8.2 | 0.4 | 8.6 | 2.1 |
| 6037603101 | 37.43 | 72.44 | 70-75% | 4244 | Los Angeles | 12.2 | 74.7 | 13.1 | 40.2 | 10.1 | 16 | 0.1 | 30.8 | 2.8 |
| 6019001414 | 37.43 | 72.43 | 70-75% | 7381 | Fresno | 17.4 | 72.8 | 9.8 | 35.6 | 27.3 | 6.5 | 0.3 | 27.4 | 2.9 |
| 6019005602 | 37.42 | 72.42 | 70-75% | 5467 | Fresno | 14.3 | 68.6 | 17.1 | 30.8 | 55 | 1.5 | 0.9 | 8.7 | 3.2 |
| 6029006100 | 37.41 | 72.41 | 70-75% | 8264 | Kern | 16.5 | 69.2 | 14.3 | 31.7 | 61.6 | 1.5 | 0.8 | 2.1 | 2.3 |
| 6065042212 | 37.40 | 72.39 | 70-75% | 6727 | Riverside | 14.3 | 79.9 | 5.8 | 45.9 | 26.9 | 16.3 | 0.3 | 7.3 | 3.2 |
| 6073014806 | 37.40 | 72.38 | 70-75% | 2577 | San Diego | 11.6 | 79.3 | 9.1 | 26.2 | 48.4 | 14 | 0.6 | 6.5 | 4.3 |
| 6019005704 | 37.39 | 72.37 | 70-75% | 5542 | Fresno | 16.1 | 75.9 | 8 | 37.2 | 50.5 | 1.2 | 0.8 | 7.3 | 2.9 |
| 6037481402 | 37.39 | 72.35 | 70-75% | 7175 | Los Angeles | 8.3 | 76.5 | 15.2 | 18 | 6.1 | 0.4 | 0.1 | 74.5 | 1 |
| 6067008801 | 37.38 | 72.34 | 70-75% | 4436 | Sacramento | 19.2 | 76.5 | 4.3 | 15.9 | 47.7 | 10.2 | 0.6 | 19.3 | 6.3 |
| 6065042009 | 37.37 | 72.33 | 70-75% | 7119 | Riverside | 15.9 | 75.5 | 8.6 | 57 | 28.1 | 8.3 | 0.3 | 4.5 | 1.7 |
| 6013327000 | 37.36 | 72.32 | 70-75% | 6695 | Contra Costa | 11.4 | 74.4 | 14.2 | 31.9 | 52.4 | 4.1 | 0.4 | 7.4 | 3.9 |
| 6077005108 | 37.33 | 72.30 | 70-75% | 4463 | San Joaquin | 17.4 | 75.5 | 7.1 | 49.5 | 39.5 | 3.4 | 0.6 | 4.4 | 2.7 |
| 6037600802 | 37.32 | 72.29 | 70-75% | 2597 | Los Angeles | 9.8 | 73.5 | 16.7 | 11.2 | 3.5 | 81.2 | 0.5 | 0.5 | 3.2 |
| 6071009904 | 37.31 | 72.28 | 70-75% | 10960 | San Bernardino | 20 | 71.8 | 8.2 | 47.3 | 23.7 | 21.9 | 0.4 | 3.2 | 3.4 |
| 6065042617 | 37.30 | 72.27 | 70-75% | 11436 | Riverside | 19.5 | 75.8 | 4.7 | 76 | 8.1 | 11.2 | 0.2 | 2.7 | 1.7 |
| 6065040821 | 37.28 | 72.25 | 70-75% | 5691 | Riverside | 15.4 | 79.6 | 5 | 36.1 | 31.5 | 12.2 | 0.2 | 16 | 4.1 |
| 6037124102 | 37.26 | 72.24 | 70-75% | 3549 | Los Angeles | 12.4 | 80.9 | 6.7 | 53.2 | 31.6 | 5.6 | 0.1 | 6.3 | 3.1 |
| 6071002604 | 37.26 | 72.23 | 70-75% | 5723 | San Bernardino | 17 | 79.3 | 3.7 | 74.7 | 12.3 | 7.8 | 0.2 | 3.6 | 1.4 |
| 6037572202 | 37.26 | 72.22 | 70-75% | 3609 | Los Angeles | 12.1 | 74.6 | 13.3 | 34.3 | 17.3 | 15.4 | 0.2 | 30 | 2.8 |
| 6001428000 | 37.26 | 72.20 | 70-75% | 2928 | Alameda | 10.6 | 81.5 | 7.9 | 17.9 | 35.1 | 7.5 | 0.3 | 32.9 | 6.3 |
| 6107003502 | 37.25 | 72.19 | 70-75% | 10796 | Tulare | 18.2 | 73.7 | 8.1 | 54.1 | 35 | 0.8 | 0.7 | 7.5 | 2 |
| 6067004903 | 37.25 | 72.18 | 70-75% | 6740 | Sacramento | 19.3 | 73.5 | 7.2 | 22.7 | 8.9 | 24.6 | 0.4 | 38 | 5.5 |
| 6007003001 | 37.23 | 72.17 | 70-75% | 3140 | Butte | 16.2 | 72.7 | 11.1 | 15.7 | 46.8 | 11.2 | 3.7 | 17 | 5.6 |
| 6077003410 | 37.23 | 72.15 | 70-75% | 5778 | San Joaquin | 17.2 | 75.2 | 7.6 | 34.3 | 11.4 | 14 | 0.3 | 36.1 | 3.9 |
| 6037120107 | 37.22 | 72.14 | 70-75% | 3818 | Los Angeles | 22.9 | 72.5 | 4.6 | 85.8 | 5.3 | 2 | 0.1 | 5.3 | 1.4 |
| 6037576502 | 37.21 | 72.13 | 70-75% | 4543 | Los Angeles | 12.4 | 83.3 | 4.3 | 45.7 | 26 | 17.5 | 0.5 | 6.4 | 3.9 |
| 6067003101 | 37.21 | 72.12 | 70-75% | 3568 | Sacramento | 15.9 | 74.1 | 10 | 53.3 | 29.5 | 7.2 | 0.8 | 5.5 | 3.8 |
| 6067005601 | 37.20 | 72.10 | 70-75% | 4822 | Sacramento | 10.5 | 67.3 | 22.2 | 17 | 62 | 8.8 | 1 | 6.7 | 4.5 |
| 6037132001 | 37.19 | 72.09 | 70-75% | 3202 | Los Angeles | 13.3 | 74.5 | 12.2 | 33.3 | 52 | 3.4 | 0.2 | 7.7 | 3.3 |
| 6019004901 | 37.19 | 72.08 | 70-75% | 4052 | Fresno | 17.8 | 73.7 | 8.5 | 51.7 | 34.1 | 5.6 | 1 | 5.8 | 1.7 |
| 6037482502 | 37.18 | 72.06 | 70-75% | 3373 | Los Angeles | 12.4 | 76.1 | 11.5 | 29.3 | 2.2 | 0.4 | 0.1 | 67.5 | 0.5 |
| 6077003112 | 37.16 | 72.05 | 70-75% | 2974 | San Joaquin | 11 | 68.4 | 20.6 | 25 | 45.9 | 9.2 | 0.4 | 15.4 | 4 |
| 6077004501 | 37.15 | 72.04 | 70-75% | 2327 | San Joaquin | 13.4 | 68 | 18.6 | 37 | 52.3 | 0.9 | 0.4 | 6.5 | 2.8 |
| 6071003403 | 37.15 | 72.03 | 70-75% | 4524 | San Bernardino | 15.7 | 76.9 | 7.4 | 78.2 | 16.6 | 2 | 0.2 | 2 | 1 |
| 6037216700 | 37.14 | 72.01 | 70-75% | 3709 | Los Angeles | 9.3 | 75.3 | 15.4 | 20.1 | 31.6 | 34.2 | 0.3 | 8.5 | 5.2 |
| 6075012501 | 37.14 | 72.00 | 70-75% | 5335 | San Francisco | 7 | 80.3 | 12.7 | 19.2 | 34.1 | 16.6 | 0.8 | 24.9 | 4.4 |
| 6099003605 | 37.12 | 71.99 | 70-75% | 8007 | Stanislaus | 11.3 | 77.1 | 11.6 | 25.6 | 59.2 | 2 | 0.4 | 8.7 | 4.1 |
| 6037125501 | 37.11 | 71.98 | 70-75% | 3077 | Los Angeles | 7.5 | 84.8 | 7.7 | 29.2 | 53.7 | 7.2 | 0.2 | 7.1 | 2.6 |
| 6059087300 | 37.11 | 71.96 | 70-75% | 10413 | Orange | 18 | 76.6 | 5.4 | 71.7 | 13.7 | 2.1 | 0.1 | 11 | 1.4 |
| 6099003001 | 37.10 | 71.95 | 70-75% | 9397 | Stanislaus | 17.4 | 75.2 | 7.4 | 48.4 | 31.1 | 2.1 | 0.6 | 14.4 | 3.5 |
| 6039000300 | 37.10 | 71.94 | 70-75% | 8213 | Madera | 17.9 | 70.4 | 11.7 | 44.4 | 49.6 | 1.3 | 1 | 1.2 | 2.6 |
| 6059086304 | 37.10 | 71.93 | 70-75% | 4847 | Orange | 13.6 | 77 | 9.4 | 54.2 | 32 | 1.4 | 0.3 | 10 | 2 |
| 6025011000 | 37.09 | 71.91 | 70-75% | 12047 | Imperial | 17.3 | 75.5 | 7.2 | 72.3 | 23.1 | 1.9 | 0.2 | 1.5 | 0.9 |
| 6019003103 | 37.08 | 71.90 | 70-75% | 5708 | Fresno | 15.9 | 75.6 | 8.5 | 36.7 | 44.4 | 4.3 | 0.7 | 10.8 | 3 |
| 6071011800 | 37.08 | 71.89 | 70-75% | 7000 | San Bernardino | 16.3 | 72.8 | 10.9 | 41.9 | 46.4 | 4.8 | 1.5 | 2.6 | 2.8 |
| 6059074109 | 37.08 | 71.88 | 70-75% | 3801 | Orange | 18.2 | 77 | 4.8 | 89.4 | 3.5 | 0.6 | 0.2 | 6.1 | 0.1 |
| 6071001905 | 37.08 | 71.86 | 70-75% | 6389 | San Bernardino | 15.5 | 79.3 | 5.2 | 46.4 | 30.6 | 5.3 | 0.3 | 14.9 | 2.6 |
| 6071000604 | 37.07 | 71.85 | 70-75% | 5682 | San Bernardino | 13.5 | 76.3 | 10.2 | 65.1 | 26.6 | 2.9 | 0.3 | 3.8 | 1.3 |
| 6037482301 | 37.07 | 71.84 | 70-75% | 5162 | Los Angeles | 11 | 78.2 | 10.8 | 26.3 | 2.3 | 0.4 | 0.1 | 70.1 | 0.7 |
| 6019003600 | 37.06 | 71.82 | 70-75% | 4009 | Fresno | 12.8 | 75.8 | 11.4 | 37.1 | 54.4 | 2.2 | 0.7 | 3.1 | 2.4 |
| 6037267300 | 37.06 | 71.81 | 70-75% | 3680 | Los Angeles | 5.3 | 84.9 | 9.8 | 19.9 | 42.4 | 4.4 | 0.2 | 28.3 | 4.9 |
| 6107004400 | 37.04 | 71.80 | 70-75% | 7470 | Tulare | 22.4 | 71.2 | 6.4 | 91.1 | 1.9 | 0.5 | 0.1 | 5.9 | 0.5 |
| 6013306004 | 37.02 | 71.79 | 70-75% | 3324 | Contra Costa | 14.4 | 72.5 | 13.1 | 30.4 | 46.4 | 14.4 | 0.6 | 4.1 | 4.2 |
| 6025010900 | 37.00 | 71.77 | 70-75% | 6755 | Imperial | 15.6 | 72 | 12.4 | 80.9 | 17.4 | 0.3 | 0.1 | 0.6 | 0.6 |
| 6071008705 | 36.99 | 71.76 | 70-75% | 4617 | San Bernardino | 14.3 | 74.2 | 11.5 | 35.8 | 58.9 | 1.2 | 0.6 | 1.2 | 2.4 |
| 6037183610 | 36.99 | 71.75 | 70-75% | 3275 | Los Angeles | 15.1 | 78 | 6.9 | 80.6 | 8.2 | 2 | 0.2 | 7.3 | 1.6 |

| | | | | | | | | | | | | | | |
|---|---|---|---|---|---|---|---|---|---|---|---|---|---|---|
| 6085502002 | 36.96 | 71.74 | 70-75% | 4887 | Santa Clara | 19.3 | 75.8 | 4.9 | 69.8 | 18.6 | 2.8 | 0.3 | 6 | 2.5 |
| 6037577000 | 36.96 | 71.72 | 70-75% | 6995 | Los Angeles | 8.6 | 84.8 | 6.6 | 27.1 | 44.6 | 13 | 0.3 | 10.4 | 4.7 |
| 6037115401 | 36.95 | 71.71 | 70-75% | 5776 | Los Angeles | 13.5 | 76.6 | 9.9 | 46.2 | 33.4 | 5.2 | 0.1 | 12.2 | 2.9 |
| 6067005509 | 36.94 | 71.70 | 70-75% | 1910 | Sacramento | 13.2 | 83.2 | 3.6 | 28.8 | 32.8 | 19.3 | 0.7 | 12.1 | 6.3 |
| 6037576501 | 36.94 | 71.69 | 70-75% | 3369 | Los Angeles | 13.4 | 78.4 | 8.2 | 46.4 | 27.5 | 17.1 | 0.3 | 5.5 | 3.2 |
| 6037293201 | 36.92 | 71.67 | 70-75% | 6629 | Los Angeles | 14 | 77.6 | 8.4 | 53.2 | 15.9 | 4.6 | 0.2 | 24 | 2.1 |
| 6037234502 | 36.92 | 71.66 | 70-75% | 2698 | Los Angeles | 11.1 | 72.5 | 16.4 | 33.7 | 1.6 | 60.8 | 0.1 | 1 | 2.8 |
| 6071000401 | 36.91 | 71.65 | 70-75% | 6387 | San Bernardino | 12.2 | 78.7 | 9.1 | 54.2 | 34.2 | 2.5 | 0.2 | 7.1 | 1.7 |
| 6037106114 | 36.91 | 71.64 | 70-75% | 5880 | Los Angeles | 17 | 76.7 | 6.3 | 84.9 | 7.5 | 3.6 | 0.4 | 2.3 | 1.3 |
| 6037201504 | 36.89 | 71.62 | 70-75% | 2428 | Los Angeles | 14.8 | 76.6 | 8.6 | 88 | 3.3 | 0.8 | 0.5 | 7.1 | 0.3 |
| 6037543304 | 36.88 | 71.61 | 70-75% | 6061 | Los Angeles | 9.3 | 71.8 | 18.9 | 6.4 | 1.6 | 87.1 | 0.1 | 2.5 | 2.4 |
| 6065043310 | 36.88 | 71.60 | 70-75% | 3120 | Riverside | 17.7 | 72.6 | 9.7 | 40.5 | 49.3 | 6.8 | 0.4 | 1 | 2 |
| 6037123602 | 36.87 | 71.59 | 70-75% | 3332 | Los Angeles | 11.3 | 75.9 | 12.8 | 38 | 49.9 | 3 | 0.2 | 6.3 | 2.6 |
| 6071004507 | 36.86 | 71.57 | 70-75% | 5042 | San Bernardino | 18.2 | 76.7 | 5.1 | 54 | 26.6 | 12.6 | 0.3 | 3.3 | 3.2 |
| 6067004905 | 36.86 | 71.56 | 70-75% | 6649 | Sacramento | 18.4 | 69.8 | 11.8 | 49.3 | 15 | 18 | 0.3 | 13.4 | 3.9 |
| 6071005100 | 36.85 | 71.55 | 70-75% | 7749 | San Bernardino | 15.5 | 73.2 | 11.3 | 46.5 | 37.6 | 11 | 0.4 | 1.7 | 2.9 |
| 6071002706 | 36.84 | 71.53 | 70-75% | 6654 | San Bernardino | 11.8 | 79.8 | 8.4 | 47.4 | 25.8 | 20.7 | 0.3 | 3.3 | 2.4 |
| 6103001100 | 36.83 | 71.52 | 70-75% | 7523 | Tehama | 17.8 | 70.9 | 11.3 | 42.3 | 52.3 | 0.4 | 1.6 | 1.2 | 2.3 |
| 6099000908 | 36.83 | 71.51 | 70-75% | 5093 | Stanislaus | 13.3 | 75.9 | 10.8 | 27.9 | 58.8 | 3.5 | 0.8 | 5.4 | 3.5 |
| 6037139504 | 36.83 | 71.50 | 70-75% | 3476 | Los Angeles | 7.9 | 69.1 | 23 | 9.9 | 76.3 | 3.6 | 0.1 | 4.3 | 5.8 |
| 6065045605 | 36.82 | 71.48 | 70-75% | 10543 | Riverside | 21.8 | 68.6 | 9.6 | 83.2 | 14.3 | 0.4 | 1.1 | 0.8 | 0.2 |
| 6037209510 | 36.82 | 71.47 | 70-75% | 2692 | Los Angeles | 13.9 | 78.8 | 7.3 | 70.7 | 3.2 | 3.6 | 0.2 | 21.2 | 1 |
| 6013303103 | 36.82 | 71.46 | 70-75% | 10812 | Contra Costa | 17.3 | 74.9 | 7.8 | 41.4 | 43.9 | 5.8 | 0.5 | 4.8 | 3.7 |
| 6065042618 | 36.82 | 71.45 | 70-75% | 8283 | Riverside | 19.5 | 74.5 | 6 | 79.4 | 8.8 | 7.3 | 0.1 | 3.4 | 1 |
| 6037211922 | 36.81 | 71.43 | 70-75% | 3389 | Los Angeles | 12.6 | 82.9 | 4.5 | 53.2 | 5.3 | 5.6 | 0.2 | 34.2 | 1.4 |
| 6037553503 | 36.81 | 71.42 | 70-75% | 2768 | Los Angeles | 17.9 | 76.4 | 5.7 | 78.7 | 4.5 | 13.6 | 0.1 | 2 | 1.2 |
| 6073018509 | 36.80 | 71.41 | 70-75% | 4968 | San Diego | 16.9 | 76.3 | 6.8 | 57.3 | 29.4 | 5.3 | 0.5 | 4.3 | 3.1 |
| 6067004904 | 36.79 | 71.40 | 70-75% | 5675 | Sacramento | 15.2 | 71.6 | 13.2 | 33.5 | 28.4 | 16.8 | 0.4 | 15.8 | 5 |
| 6081600100 | 36.77 | 71.38 | 70-75% | 4854 | San Mateo | 12.2 | 78.3 | 9.5 | 18 | 46.7 | 1.7 | 0.2 | 28.4 | 4.9 |
| 6067004402 | 36.76 | 71.37 | 70-75% | 4252 | Sacramento | 18.1 | 74.1 | 7.8 | 45.8 | 13.5 | 16.2 | 0.5 | 19.9 | 4.1 |
| 6037400602 | 36.75 | 71.36 | 70-75% | 4719 | Los Angeles | 16.2 | 75.8 | 8 | 74.3 | 18.1 | 1.6 | 0.3 | 4.6 | 1.2 |
| 6037503106 | 36.72 | 71.35 | 70-75% | 3795 | Los Angeles | 15.4 | 75 | 9.6 | 73.1 | 20.7 | 0.9 | 0.3 | 4.1 | 0.9 |
| 6071000404 | 36.71 | 71.33 | 70-75% | 4419 | San Bernardino | 12.4 | 72.2 | 15.4 | 52.5 | 31.9 | 5.5 | 0.3 | 7.6 | 2.1 |
| 6071003801 | 36.70 | 71.32 | 70-75% | 4735 | San Bernardino | 15.6 | 76 | 8.4 | 61.8 | 11.7 | 22.3 | 0.1 | 2.3 | 1.8 |
| 6037402001 | 36.70 | 71.31 | 70-75% | 3080 | Los Angeles | 13.6 | 75.4 | 11 | 39.3 | 33.9 | 10.6 | 0.3 | 13.5 | 2.5 |
| 6037131400 | 36.70 | 71.30 | 70-75% | 5897 | Los Angeles | 12.9 | 77.2 | 9.9 | 46.9 | 28.4 | 6 | 0.2 | 15.9 | 2.6 |
| 6001401300 | 36.69 | 71.28 | 70-75% | 3528 | Alameda | 6.6 | 73 | 20.4 | 13.8 | 26.4 | 35.6 | 0.3 | 19.4 | 4.5 |
| 6037117530 | 36.69 | 71.27 | 70-75% | 5641 | Los Angeles | 17.7 | 77 | 5.3 | 75 | 5.1 | 3.1 | 0.1 | 15.4 | 1.3 |
| 6111006100 | 36.68 | 71.26 | 70-75% | 8378 | Ventura | 15.6 | 78.4 | 6 | 37.4 | 39.8 | 1.2 | 0.1 | 18.7 | 2.7 |
| 6059099701 | 36.67 | 71.24 | 70-75% | 6171 | Orange | 12.8 | 74 | 13.2 | 22.5 | 15.9 | 0.2 | 0.2 | 59.2 | 1.9 |
| 6067006500 | 36.67 | 71.23 | 70-75% | 6637 | Sacramento | 18.7 | 74.1 | 7.2 | 27.4 | 19.3 | 25.5 | 0.9 | 21.7 | 5.2 |
| 6007001200 | 36.67 | 71.22 | 70-75% | 3556 | Butte | 9.5 | 84.8 | 5.7 | 14.6 | 76.6 | 1.1 | 1 | 2.8 | 3.9 |
| 6073010111 | 36.66 | 71.21 | 70-75% | 3072 | San Diego | 15.6 | 75.7 | 8.7 | 90.5 | 4.9 | 1.3 | 0 | 2.4 | 0.9 |
| 6081601300 | 36.66 | 71.19 | 70-75% | 7510 | San Mateo | 12.3 | 76 | 11.7 | 40.4 | 10.3 | 2.6 | 0.1 | 44 | 2.5 |
| 6037208904 | 36.66 | 71.18 | 70-75% | 3926 | Los Angeles | 15 | 74.6 | 10.4 | 86.3 | 4.5 | 2 | 0.5 | 6.4 | 0.4 |
| 6097153104 | 36.66 | 71.17 | 70-75% | 4046 | Sonoma | 19.4 | 75.7 | 4.9 | 65.2 | 27.5 | 1.3 | 1.1 | 2.8 | 2.1 |
| 6067005402 | 36.65 | 71.16 | 70-75% | 2641 | Sacramento | 6 | 77.9 | 16.1 | 14.5 | 55.9 | 11 | 0.7 | 12.3 | 5.6 |
| 6071009905 | 36.64 | 71.14 | 70-75% | 7575 | San Bernardino | 19.5 | 73.7 | 6.8 | 53.6 | 23.5 | 15.5 | 0.5 | 3.8 | 3.1 |
| 6037503202 | 36.64 | 71.13 | 70-75% | 4462 | Los Angeles | 13.7 | 74.4 | 11.9 | 76.2 | 16.5 | 0.9 | 0.5 | 5 | 0.9 |
| 6071010013 | 36.63 | 71.12 | 70-75% | 8022 | San Bernardino | 15.1 | 75.9 | 9 | 46.6 | 44.9 | 3.9 | 0.6 | 1.6 | 2.5 |
| 6037403318 | 36.63 | 71.11 | 70-75% | 6243 | Los Angeles | 11.4 | 80.1 | 8.5 | 34.6 | 25.3 | 11.6 | 0.2 | 25.2 | 3.2 |
| 6059075515 | 36.62 | 71.09 | 70-75% | 15295 | Orange | 16.3 | 79.5 | 4.2 | 37.9 | 25.1 | 2.2 | 0.2 | 31.4 | 3.2 |
| 6025012002 | 36.62 | 71.08 | 70-75% | 9678 | Imperial | 15.8 | 75.2 | 9 | 95 | 2.1 | 0.2 | 0.1 | 2.4 | 0.4 |
| 6059074005 | 36.62 | 71.07 | 70-75% | 7432 | Orange | 15.6 | 75.7 | 8.7 | 74.8 | 8.9 | 0.8 | 0.2 | 14 | 1.2 |
| 6013355200 | 36.61 | 71.06 | 70-75% | 7444 | Contra Costa | 15.7 | 78.5 | 5.8 | 23.5 | 19.3 | 10.9 | 0.2 | 41.2 | 4.9 |
| 6065030800 | 36.60 | 71.04 | 70-75% | 6973 | Riverside | 13.4 | 75.2 | 11.4 | 41.5 | 47.5 | 5.4 | 0.4 | 3.1 | 2.2 |
| 6001436200 | 36.58 | 71.03 | 70-75% | 3827 | Alameda | 17.8 | 73.2 | 9 | 54 | 16.7 | 15.5 | 0.4 | 10.1 | 3.2 |
| 6037406902 | 36.58 | 71.02 | 70-75% | 3149 | Los Angeles | 12.5 | 72.6 | 14.9 | 76.6 | 7.2 | 2.6 | 0.2 | 12.5 | 0.9 |
| 6053001801 | 36.58 | 71.01 | 70-75% | 3957 | Monterey | 16.2 | 76.4 | 7.4 | 60.9 | 20.2 | 2.4 | 0.3 | 12.9 | 3.3 |
| 6067007504 | 36.57 | 70.99 | 70-75% | 2054 | Sacramento | 13.3 | 69.8 | 16.9 | 15.3 | 67.9 | 7.4 | 0.4 | 5 | 4 |
| 6001406202 | 36.57 | 70.98 | 70-75% | 4718 | Alameda | 17.8 | 74.4 | 7.8 | 65.5 | 5.6 | 11.9 | 1 | 14.4 | 1.6 |
| 6059099801 | 36.57 | 70.97 | 70-75% | 5816 | Orange | 13.8 | 74.6 | 11.6 | 34.9 | 20.7 | 1.1 | 0.2 | 41.4 | 1.7 |
| 6037482503 | 36.57 | 70.95 | 70-75% | 4357 | Los Angeles | 12.8 | 76.5 | 10.7 | 33.9 | 1.5 | 0 | 0 | 63.2 | 1.3 |
| 6007002800 | 36.57 | 70.94 | 70-75% | 4275 | Butte | 16.4 | 71.7 | 11.9 | 13.4 | 70.7 | 2.6 | 3.1 | 4.3 | 5.9 |
| 6071002601 | 36.56 | 70.93 | 70-75% | 10799 | San Bernardino | 16.9 | 76.6 | 6.5 | 70.2 | 14.2 | 6.7 | 0.2 | 7.3 | 1.3 |
| 6077003310 | 36.56 | 70.92 | 70-75% | 4191 | San Joaquin | 16.9 | 68.4 | 14.7 | 36.2 | 23.3 | 16.2 | 0.5 | 20.2 | 3.5 |

| | | | | | | | | | | | | | | | |
|---|---|---|---|---|---|---|---|---|---|---|---|---|---|---|---|
| 6037134002 | 36.56 | 70.90 | 70-75% | 3372 | Los Angeles | 14 | 77.6 | 8.4 | 61 | 18.2 | 3.1 | 0.3 | 15.3 | 2.1 |
| 6037602402 | 36.55 | 70.89 | 70-75% | 6769 | Los Angeles | 13.5 | 76.6 | 9.9 | 58.5 | 19.6 | 10.1 | 0.2 | 9 | 2.5 |
| 6107002303 | 36.55 | 70.88 | 70-75% | 6447 | Tulare | 12.9 | 65.8 | 21.3 | 29.7 | 63.6 | 1.9 | 0.4 | 2.1 | 2.2 |
| 6099000501 | 36.54 | 70.87 | 70-75% | 7165 | Stanislaus | 13.5 | 77 | 9.5 | 30 | 56.6 | 2.7 | 0.6 | 7.1 | 3 |
| 6037576904 | 36.52 | 70.85 | 70-75% | 3288 | Los Angeles | 12 | 83.6 | 4.4 | 39.4 | 29.5 | 15.2 | 0.4 | 12.3 | 3.3 |
| 6053001700 | 36.52 | 70.84 | 70-75% | 3780 | Monterey | 16.4 | 75.9 | 7.7 | 64.3 | 24.8 | 3 | 0.2 | 4.9 | 2.9 |
| 6037481002 | 36.52 | 70.83 | 70-75% | 5447 | Los Angeles | 10.2 | 77.5 | 12.3 | 33 | 8.8 | 1.7 | 0.1 | 55 | 1.4 |
| 6059001903 | 36.50 | 70.82 | 70-75% | 3418 | Orange | 14.9 | 75.8 | 9.3 | 50.9 | 30 | 1.6 | 0.4 | 15 | 2.1 |
| 6037128101 | 36.49 | 70.80 | 70-75% | 3738 | Los Angeles | 14.2 | 78.2 | 7.6 | 47.5 | 42 | 3.2 | 0 | 4.9 | 2.4 |
| 6067006003 | 36.49 | 70.79 | 70-75% | 4461 | Sacramento | 14.6 | 74 | 11.4 | 19.4 | 64.4 | 6.3 | 0.7 | 5 | 4.2 |
| 6059086803 | 36.48 | 70.78 | 70-75% | 7478 | Orange | 13.3 | 72.7 | 14 | 33.2 | 30 | 5.5 | 0.2 | 28.1 | 2.9 |
| 6037127712 | 36.48 | 70.77 | 70-75% | 2991 | Los Angeles | 14.2 | 79.3 | 6.5 | 59.7 | 24.6 | 6.1 | 0.2 | 7.7 | 1.7 |
| 6037104105 | 36.48 | 70.75 | 70-75% | 5412 | Los Angeles | 16.9 | 77.4 | 5.7 | 82.6 | 4.1 | 6.4 | 0.1 | 5.7 | 1.1 |
| 6059001103 | 36.47 | 70.74 | 70-75% | 4489 | Orange | 14.3 | 72.3 | 13.4 | 61.3 | 30.6 | 1.3 | 0.3 | 5 | 1.4 |
| 6107003802 | 36.45 | 70.73 | 70-75% | 4123 | Tulare | 20.6 | 68.8 | 10.6 | 66.3 | 29 | 0.7 | 0.9 | 1.8 | 1.2 |
| 6025010800 | 36.44 | 70.72 | 70-75% | 1368 | Imperial | 13.6 | 73.8 | 12.6 | 52.6 | 45.4 | 0.2 | 0.2 | 0.6 | 1 |
| 6107001902 | 36.43 | 70.70 | 70-75% | 4016 | Tulare | 12.8 | 72.5 | 14.7 | 33 | 59.4 | 1.2 | 0.7 | 3.9 | 1.8 |
| 6065040603 | 36.43 | 70.69 | 70-75% | 2376 | Riverside | 15.8 | 76.2 | 8 | 72.5 | 25 | 0.4 | 0.4 | 1 | 0.7 |
| 6037543603 | 36.42 | 70.68 | 70-75% | 3690 | Los Angeles | 6.2 | 64.3 | 29.5 | 17.9 | 29.5 | 28.1 | 0.3 | 20.4 | 3.9 |
| 6037211703 | 36.41 | 70.66 | 70-75% | 4750 | Los Angeles | 10.7 | 82.3 | 7 | 38.6 | 8 | 5 | 0.1 | 46.3 | 2 |
| 6037183220 | 36.41 | 70.65 | 70-75% | 4114 | Los Angeles | 14.4 | 75.1 | 10.5 | 74.7 | 8.7 | 1.4 | 0.2 | 13.9 | 1.2 |
| 6001432600 | 36.40 | 70.64 | 70-75% | 6842 | Alameda | 11.3 | 74.4 | 14.3 | 30.2 | 26.1 | 19.5 | 0.5 | 20.5 | 3.3 |
| 6077003404 | 36.40 | 70.63 | 70-75% | 5842 | San Joaquin | 17.1 | 69 | 13.9 | 32.9 | 16.4 | 10.7 | 0.4 | 37.1 | 2.5 |
| 6029006007 | 36.40 | 70.61 | 70-75% | 5474 | Kern | 11.7 | 70.9 | 17.4 | 16.1 | 77.3 | 1.2 | 0.9 | 1.7 | 2.7 |
| 6065046800 | 36.39 | 70.60 | 70-75% | 6365 | Riverside | 15.3 | 79.1 | 5.6 | 58.9 | 16.7 | 15.7 | 0.4 | 5.7 | 2.6 |
| 6037503103 | 36.39 | 70.59 | 70-75% | 5004 | Los Angeles | 14.7 | 78.1 | 7.2 | 85.1 | 9.7 | 1 | 0.2 | 3.5 | 0.6 |
| 6071003603 | 36.38 | 70.58 | 70-75% | 4141 | San Bernardino | 14.7 | 79.8 | 5.5 | 72.9 | 11.5 | 11.6 | 0.3 | 2.6 | 1.2 |
| 6019006000 | 36.38 | 70.56 | 70-75% | 8895 | Fresno | 17.1 | 70.3 | 12.6 | 69.3 | 25 | 0.7 | 0.5 | 3.2 | 1.3 |
| 6107003602 | 36.38 | 70.55 | 70-75% | 7114 | Tulare | 19 | 68.6 | 12.4 | 57.2 | 34 | 0.4 | 0.7 | 6.3 | 1.4 |
| 6067005506 | 36.37 | 70.54 | 70-75% | 3066 | Sacramento | 16.3 | 79.5 | 4.2 | 31.5 | 36.2 | 16.8 | 0.8 | 8.4 | 6.3 |
| 6037550901 | 36.36 | 70.53 | 70-75% | 3762 | Los Angeles | 13.9 | 77.1 | 9 | 73 | 19 | 2.6 | 0.1 | 4.2 | 1 |
| 6111004400 | 36.35 | 70.51 | 70-75% | 7251 | Ventura | 15.3 | 75 | 9.7 | 52.8 | 33 | 4.6 | 0.4 | 6.1 | 3.2 |
| 6073010005 | 36.34 | 70.50 | 70-75% | 7366 | San Diego | 14.8 | 72.8 | 12.4 | 92.1 | 2.6 | 1 | 0 | 3.6 | 0.7 |
| 6037123520 | 36.33 | 70.49 | 70-75% | 2567 | Los Angeles | 11.7 | 78.5 | 9.8 | 51.7 | 38.1 | 2.6 | 0.2 | 4.8 | 2.6 |
| 6059076208 | 36.32 | 70.48 | 70-75% | 4999 | Orange | 10.9 | 74.5 | 14.6 | 29 | 57.6 | 1.7 | 0.4 | 9.1 | 2.2 |
| 6029000506 | 36.31 | 70.46 | 70-75% | 2795 | Kern | 16.2 | 77.5 | 6.3 | 24.1 | 57.1 | 5.1 | 1 | 9.7 | 3 |
| 6071010012 | 36.31 | 70.45 | 70-75% | 4877 | San Bernardino | 15.3 | 74 | 10.7 | 43.9 | 47.7 | 3.9 | 0.4 | 1.6 | 2.5 |
| 6037218220 | 36.31 | 70.44 | 70-75% | 4358 | Los Angeles | 13.4 | 76.8 | 9.8 | 52.1 | 6.8 | 33.3 | 0.1 | 4.7 | 2.9 |
| 6065031100 | 36.29 | 70.43 | 70-75% | 4584 | Riverside | 14.7 | 73.7 | 11.6 | 35.4 | 52.6 | 6.9 | 0.7 | 1.7 | 2.6 |
| 6065043505 | 36.28 | 70.41 | 70-75% | 2911 | Riverside | 5.2 | 49 | 45.8 | 23.7 | 65.9 | 5.8 | 0.6 | 1.6 | 2.4 |
| 6065043504 | 36.26 | 70.40 | 70-75% | 7743 | Riverside | 15.5 | 65.9 | 18.6 | 33.7 | 52.8 | 5.6 | 0.6 | 4.4 | 2.9 |
| 6037119202 | 36.24 | 70.39 | 70-75% | 4707 | Los Angeles | 15.5 | 76.5 | 8 | 89 | 5 | 1.5 | 0.1 | 3.8 | 0.7 |
| 6019003810 | 36.22 | 70.37 | 70-75% | 5256 | Fresno | 15.5 | 78.2 | 6.3 | 46.4 | 24 | 11.3 | 1 | 15.3 | 2 |
| 6037554201 | 36.22 | 70.36 | 70-75% | 4108 | Los Angeles | 15 | 76.4 | 8.6 | 53.4 | 21.1 | 9.8 | 0.3 | 13.3 | 2.1 |
| 6037482800 | 36.21 | 70.35 | 70-75% | 4074 | Los Angeles | 10.6 | 70.4 | 19 | 48.8 | 8.4 | 0.2 | 0 | 40.6 | 2 |
| 6037117510 | 36.20 | 70.34 | 70-75% | 4028 | Los Angeles | 20.5 | 74.6 | 4.9 | 83.4 | 4.4 | 3.5 | 0 | 7.8 | 0.9 |
| 6037408402 | 36.20 | 70.32 | 70-75% | 5799 | Los Angeles | 10 | 72.5 | 17.5 | 55.5 | 21.8 | 1.1 | 0.1 | 20.1 | 1.5 |
| 6037481202 | 36.20 | 70.31 | 70-75% | 6608 | Los Angeles | 12.3 | 76.8 | 10.9 | 37 | 9.2 | 1.1 | 0.3 | 50.9 | 1.5 |
| 6065042206 | 36.18 | 70.30 | 70-75% | 5620 | Riverside | 9.6 | 82.4 | 8 | 24.8 | 45.7 | 12 | 0.4 | 13.3 | 3.8 |
| 6107000800 | 36.18 | 70.29 | 70-75% | 7416 | Tulare | 17.6 | 73.2 | 9.2 | 67.5 | 29.9 | 0.2 | 0.8 | 0.6 | 0.9 |
| 6071002103 | 36.18 | 70.27 | 70-75% | 4646 | San Bernardino | 17.5 | 78.2 | 4.3 | 45.2 | 32.2 | 12.1 | 0.3 | 6.2 | 4 |
| 6067006701 | 36.17 | 70.26 | 70-75% | 8370 | Sacramento | 17.5 | 74 | 8.5 | 38.1 | 23 | 15.9 | 0.4 | 18.5 | 4.1 |
| 6069000300 | 36.15 | 70.25 | 70-75% | 4217 | San Benito | 17.5 | 74.1 | 8.4 | 87.1 | 9.9 | 0.3 | 0.5 | 1.6 | 0.6 |
| 6037275603 | 36.14 | 70.24 | 70-75% | 2711 | Los Angeles | 8.5 | 73 | 18.5 | 34.9 | 34.9 | 3.8 | 0.3 | 22.2 | 4 |
| 6065040809 | 36.14 | 70.22 | 70-75% | 3353 | Riverside | 15.1 | 77 | 7.9 | 43.8 | 34.3 | 6.5 | 0.3 | 13 | 2.1 |
| 6001423200 | 36.09 | 70.21 | 70-75% | 2794 | Alameda | 11.9 | 81.2 | 6.9 | 31.7 | 32 | 22.2 | 0.1 | 8.9 | 5.1 |
| 6019007801 | 36.09 | 70.20 | 70-75% | 2722 | Fresno | 19.1 | 75.4 | 5.5 | 96.7 | 2.1 | 0 | 0.1 | 0.9 | 0.1 |
| 6057000501 | 36.09 | 70.19 | 70-75% | 6034 | Nevada | 10 | 64.4 | 25.6 | 9.2 | 85.4 | 0.2 | 1.1 | 1.2 | 2.8 |
| 6071002037 | 36.08 | 70.17 | 70-75% | 7739 | San Bernardino | 14.2 | 80.7 | 5.1 | 42.7 | 22.9 | 15.9 | 0.3 | 15.3 | 2.9 |
| 6065045609 | 36.08 | 70.16 | 70-75% | 5880 | Riverside | 19.1 | 73.5 | 7.4 | 93.2 | 5.4 | 0.1 | 0.4 | 0.4 | 0.5 |
| 6037207101 | 36.08 | 70.15 | 70-75% | 3047 | Los Angeles | 5.5 | 74.4 | 20.1 | 11.8 | 11 | 4.9 | 0.1 | 69.8 | 2.5 |
| 6037402705 | 36.08 | 70.13 | 70-75% | 3328 | Los Angeles | 14.5 | 76.4 | 9.1 | 74.1 | 12.9 | 6.2 | 0.1 | 5.2 | 1.5 |
| 6071003405 | 36.07 | 70.12 | 70-75% | 5109 | San Bernardino | 21.9 | 74 | 4.1 | 70.6 | 9.3 | 16.5 | 0.2 | 1.6 | 1.7 |
| 6097153002 | 36.07 | 70.11 | 70-75% | 6827 | Sonoma | 16 | 76.6 | 7.4 | 53.2 | 38.6 | 2.1 | 0.9 | 2.7 | 2.5 |
| 6019004100 | 36.06 | 70.10 | 70-75% | 3306 | Fresno | 16.7 | 72.3 | 11 | 60 | 26.7 | 0.2 | 0.5 | 11.7 | 0.9 |
| 6001436900 | 36.05 | 70.08 | 70-75% | 6724 | Alameda | 18.3 | 74.2 | 7.5 | 62.5 | 13 | 7.5 | 0.2 | 14.5 | 2.3 |

| | | | | | | | | | | | | | | |
|---|---|---|---|---|---|---|---|---|---|---|---|---|---|---|
| 6037104124 | 36.04 | 70.07 | 70-75% | 4175 | Los Angeles | 12.7 | 78 | 9.3 | 50.8 | 28.1 | 13.6 | 0.4 | 5.6 | 1.5 |
| 6037201301 | 36.03 | 70.06 | 70-75% | 3442 | Los Angeles | 14 | 73.9 | 12.1 | 79.8 | 5.1 | 1.9 | 0.3 | 11.9 | 0.9 |
| 6037502801 | 36.03 | 70.05 | 70-75% | 6186 | Los Angeles | 11.7 | 76.7 | 11.6 | 75.7 | 17.6 | 0.9 | 0.3 | 4.3 | 1.2 |
| 6053010504 | 36.03 | 70.03 | 70-75% | 4732 | Monterey | 17.6 | 75.6 | 6.8 | 71.4 | 16.4 | 2.4 | 0.3 | 7.2 | 2.2 |
| 6037128910 | 36.01 | 70.02 | 70-75% | 4083 | Los Angeles | 11 | 78.4 | 10.6 | 14.2 | 65.3 | 7 | 0 | 8 | 5.4 |
| 6037401704 | 36.00 | 70.01 | 70-75% | 5828 | Los Angeles | 13.6 | 71.2 | 15.2 | 58.2 | 20.9 | 9.9 | 0.3 | 8.3 | 2.4 |
| 6071010026 | 35.99 | 70.00 | 65-70% | 10495 | San Bernardino | 19.2 | 70.8 | 10 | 40.8 | 34.8 | 16.1 | 0.4 | 4.8 | 3.2 |
| 6037551202 | 35.99 | 69.98 | 65-70% | 7666 | Los Angeles | 14.8 | 75.2 | 10 | 73.2 | 15.6 | 3.7 | 0.1 | 6.3 | 1.1 |
| 6099000506 | 35.99 | 69.97 | 65-70% | 4295 | Stanislaus | 13 | 72.9 | 14.1 | 28.5 | 58.2 | 4.6 | 0.6 | 4.5 | 3.6 |
| 6037113401 | 35.99 | 69.96 | 65-70% | 5543 | Los Angeles | 11.5 | 74.2 | 14.3 | 40.3 | 36.1 | 3.6 | 0.1 | 17.2 | 2.7 |
| 6047002301 | 35.98 | 69.95 | 65-70% | 6680 | Merced | 15.4 | 72.9 | 11.7 | 45.7 | 43.6 | 3.2 | 0.4 | 4.7 | 2.4 |
| 6037401603 | 35.96 | 69.93 | 65-70% | 2913 | Los Angeles | 7.2 | 55.7 | 37.1 | 26.5 | 65.8 | 1.5 | 0.1 | 4.1 | 1.9 |
| 6107002204 | 35.94 | 69.92 | 65-70% | 6126 | Tulare | 18.7 | 73.8 | 7.5 | 67.9 | 24.4 | 3.8 | 0.5 | 1.7 | 1.8 |
| 6037535802 | 35.93 | 69.91 | 65-70% | 6814 | Los Angeles | 15 | 77.5 | 7.5 | 96.2 | 2.5 | 0.5 | 0.3 | 0.2 | 0.2 |
| 6037408211 | 35.93 | 69.90 | 65-70% | 5947 | Los Angeles | 9.4 | 79 | 11.6 | 34.1 | 7.7 | 1.2 | 0.1 | 55.6 | 1.3 |
| 6037603301 | 35.92 | 69.88 | 65-70% | 3828 | Los Angeles | 11.4 | 70 | 18.6 | 25.9 | 9 | 6.6 | 0.1 | 54.7 | 3.8 |
| 6037555103 | 35.90 | 69.87 | 65-70% | 4727 | Los Angeles | 13.5 | 76.7 | 9.8 | 29.4 | 23.4 | 14.6 | 0.1 | 29 | 3.5 |
| 6037552001 | 35.89 | 69.86 | 65-70% | 4105 | Los Angeles | 13.1 | 76.3 | 10.6 | 73.3 | 12.1 | 2.9 | 0.4 | 10.2 | 1.1 |
| 6115040500 | 35.89 | 69.84 | 65-70% | 4111 | Yuba | 18.1 | 73.4 | 8.5 | 38.4 | 46.1 | 2.1 | 2.6 | 5.3 | 5.6 |
| 6037480902 | 35.87 | 69.83 | 65-70% | 4218 | Los Angeles | 11.5 | 78.9 | 9.6 | 37 | 4.4 | 1 | 0.2 | 56.2 | 1.2 |
| 6065043309 | 35.87 | 69.82 | 65-70% | 2890 | Riverside | 17.9 | 67.8 | 14.3 | 44.3 | 44.6 | 7.2 | 0.5 | 1.3 | 2.1 |
| 6001400700 | 35.87 | 69.81 | 65-70% | 4206 | Alameda | 9.2 | 78.7 | 12.1 | 10.4 | 29.5 | 49.2 | 0.3 | 6.3 | 4.3 |
| 6037430002 | 35.87 | 69.79 | 65-70% | 7021 | Los Angeles | 11.2 | 73.9 | 14.9 | 41.1 | 28.6 | 8.5 | 0.2 | 19.3 | 2.3 |
| 6071007302 | 35.87 | 69.78 | 65-70% | 10039 | San Bernardino | 10 | 70.5 | 19.5 | 16.3 | 43.9 | 5.7 | 0.2 | 30.1 | 3.7 |
| 6095251500 | 35.86 | 69.77 | 65-70% | 3555 | Solano | 16.4 | 76.1 | 7.5 | 40.1 | 24 | 21.9 | 0.5 | 8.5 | 5 |
| 6075026403 | 35.84 | 69.76 | 65-70% | 4140 | San Francisco | 10.2 | 74.5 | 15.3 | 16.2 | 6.5 | 4.7 | 0.2 | 70.8 | 1.6 |
| 6031000403 | 35.83 | 69.74 | 65-70% | 5281 | Kings | 16.4 | 73.7 | 9.9 | 37.2 | 42.6 | 6.4 | 0.7 | 8.7 | 4.4 |
| 6019004215 | 35.81 | 69.73 | 65-70% | 4475 | Fresno | 17.9 | 76.2 | 5.9 | 35.3 | 40 | 7 | 0.4 | 14.3 | 3 |
| 6067005505 | 35.81 | 69.72 | 65-70% | 4550 | Sacramento | 15.5 | 73.2 | 11.3 | 33.7 | 41.1 | 13 | 0.6 | 6.6 | 4.9 |
| 6073015801 | 35.78 | 69.71 | 65-70% | 3550 | San Diego | 16.5 | 76.3 | 7.2 | 37.4 | 41.6 | 11.4 | 0.8 | 2.8 | 5.9 |
| 6059074701 | 35.77 | 69.69 | 65-70% | 8346 | Orange | 18.3 | 76.9 | 4.8 | 94.4 | 1.7 | 0.7 | 0.2 | 2.8 | 0.3 |
| 6037900102 | 35.73 | 69.68 | 65-70% | 1029 | Los Angeles | 13.8 | 71.9 | 14.3 | 52.1 | 37.9 | 5.2 | 0.5 | 1.7 | 2.6 |
| 6071008100 | 35.71 | 69.67 | 65-70% | 3182 | San Bernardino | 14.5 | 77.2 | 8.3 | 30.7 | 49.5 | 7.5 | 0.8 | 8 | 3.5 |
| 6037406411 | 35.70 | 69.66 | 65-70% | 2126 | Los Angeles | 12.7 | 76.7 | 10.6 | 66.5 | 15 | 2.5 | 0.3 | 14.5 | 1.2 |
| 6037555002 | 35.69 | 69.64 | 65-70% | 3475 | Los Angeles | 12.3 | 80.4 | 7.3 | 42.3 | 26.3 | 10.6 | 0.5 | 16.7 | 3.6 |
| 6001433300 | 35.69 | 69.63 | 65-70% | 6834 | Alameda | 11.4 | 73.2 | 15.4 | 25 | 27.3 | 3.7 | 0.3 | 40 | 3.7 |
| 6065051200 | 35.68 | 69.62 | 65-70% | 3403 | Riverside | 12.4 | 73.9 | 13.7 | 33.6 | 55.5 | 1.5 | 0.4 | 6.3 | 2.6 |
| 6037404501 | 35.68 | 69.61 | 65-70% | 2355 | Los Angeles | 16.1 | 76.3 | 7.6 | 82.1 | 11.3 | 1 | 0.4 | 4.3 | 1 |
| 6081600200 | 35.67 | 69.59 | 65-70% | 4154 | San Mateo | 12.3 | 75.8 | 11.9 | 30.4 | 5.2 | 5.8 | 0 | 55.5 | 3.1 |
| 6037530202 | 35.66 | 69.58 | 65-70% | 4063 | Los Angeles | 11.9 | 72.9 | 15.2 | 87.8 | 5.9 | 0.3 | 0.2 | 5.2 | 0.5 |
| 6037534700 | 35.65 | 69.57 | 65-70% | 4283 | Los Angeles | 14.2 | 77 | 8.8 | 97 | 2 | 0 | 0 | 0.8 | 0.1 |
| 6059074106 | 35.65 | 69.55 | 65-70% | 6015 | Orange | 15.1 | 79 | 5.9 | 62.9 | 20.8 | 2.2 | 0.2 | 11.7 | 2.1 |
| 6037571600 | 35.65 | 69.54 | 65-70% | 2039 | Los Angeles | 25.9 | 66.5 | 7.6 | 37.4 | 4.5 | 52.5 | 0.1 | 2.8 | 2.7 |
| 6065042730 | 35.65 | 69.53 | 65-70% | 5338 | Riverside | 15.6 | 76.5 | 7.9 | 63.9 | 30.5 | 2.2 | 0.3 | 1.7 | 1.5 |
| 6067006600 | 35.63 | 69.52 | 65-70% | 6166 | Sacramento | 17.9 | 75.5 | 6.6 | 32 | 30 | 15.8 | 1.2 | 15.7 | 5.3 |
| 6037139401 | 35.62 | 69.50 | 65-70% | 2645 | Los Angeles | 10.6 | 74.2 | 15.2 | 22 | 60 | 4.9 | 0.5 | 7.2 | 5.5 |
| 6037554900 | 35.61 | 69.49 | 65-70% | 6991 | Los Angeles | 10.6 | 74.5 | 14.9 | 26.6 | 24.2 | 3.5 | 0.3 | 42.9 | 2.5 |
| 6111005002 | 35.59 | 69.48 | 65-70% | 3003 | Ventura | 21.5 | 74.4 | 4.1 | 89.9 | 8.7 | 0.2 | 0.3 | 0.5 | 0.4 |
| 6037139301 | 35.58 | 69.47 | 65-70% | 4462 | Los Angeles | 11 | 71.7 | 17.3 | 9.5 | 76.1 | 3.6 | 0.1 | 6.9 | 3.7 |
| 6037431200 | 35.57 | 69.45 | 65-70% | 6439 | Los Angeles | 15.1 | 76.9 | 8 | 73.7 | 10.6 | 7.8 | 0.1 | 6.5 | 1.3 |
| 6037603600 | 35.56 | 69.44 | 65-70% | 4037 | Los Angeles | 11.1 | 76.8 | 12.1 | 32.4 | 25.5 | 6.9 | 0.2 | 31.7 | 3.4 |
| 6041112202 | 35.56 | 69.43 | 65-70% | 4217 | Marin | 15.9 | 75.4 | 8.7 | 61.4 | 23.1 | 1.4 | 0.1 | 11.9 | 2.1 |
| 6071003611 | 35.56 | 69.42 | 65-70% | 4575 | San Bernardino | 19.6 | 76.7 | 3.7 | 76.2 | 6.2 | 10.9 | 0.2 | 5.3 | 1.2 |
| 6037482600 | 35.56 | 69.40 | 65-70% | 6866 | Los Angeles | 9.4 | 67.6 | 23 | 25.3 | 8 | 0.3 | 0.1 | 64.2 | 2 |
| 6085503217 | 35.54 | 69.39 | 65-70% | 4512 | Santa Clara | 18.4 | 76.3 | 5.3 | 66.7 | 3.7 | 3 | 0.3 | 25.1 | 1.2 |
| 6037480903 | 35.51 | 69.38 | 65-70% | 3206 | Los Angeles | 8.6 | 73.6 | 17.8 | 32.3 | 10.4 | 1.6 | 0.3 | 54.6 | 1 |
| 6001425102 | 35.50 | 69.37 | 65-70% | 2807 | Alameda | 6.2 | 87.1 | 6.7 | 7.4 | 35.1 | 14.8 | 0.2 | 37.8 | 4.7 |
| 6037576601 | 35.49 | 69.35 | 65-70% | 4399 | Los Angeles | 5.7 | 85.2 | 9.1 | 25.8 | 48.8 | 13.6 | 0.5 | 7.5 | 3.8 |
| 6037119900 | 35.49 | 69.34 | 65-70% | 4940 | Los Angeles | 13.5 | 77.4 | 9.1 | 64 | 11.7 | 1.3 | 0.1 | 21.3 | 1.6 |
| 6037571704 | 35.49 | 69.33 | 65-70% | 4107 | Los Angeles | 17.7 | 76.9 | 5.4 | 59.6 | 7 | 16.2 | 0.3 | 15 | 1.9 |
| 6067009639 | 35.47 | 69.32 | 65-70% | 3554 | Sacramento | 16.3 | 73.6 | 10.1 | 19.1 | 21.5 | 16.7 | 0.2 | 37.3 | 5.2 |
| 6071002705 | 35.46 | 69.30 | 65-70% | 5513 | San Bernardino | 14.2 | 75.9 | 9.9 | 56.6 | 17.5 | 19.8 | 0.4 | 3.4 | 2.2 |
| 6037123700 | 35.46 | 69.29 | 65-70% | 4114 | Los Angeles | 11.5 | 75.2 | 13.3 | 29.5 | 56.7 | 3.1 | 0.1 | 7.9 | 2.8 |
| 6077003109 | 35.46 | 69.28 | 65-70% | 5630 | San Joaquin | 13.5 | 71.8 | 14.7 | 32.1 | 49.8 | 7.5 | 0.7 | 6.1 | 3.8 |
| 6107003801 | 35.43 | 69.26 | 65-70% | 3077 | Tulare | 19.6 | 68.4 | 12 | 58.6 | 36.1 | 0.5 | 0.8 | 2.5 | 1.4 |
| 6059074803 | 35.42 | 69.25 | 65-70% | 9053 | Orange | 15.3 | 76.9 | 7.8 | 77.8 | 4.6 | 0.9 | 0.1 | 16.1 | 0.5 |

| | | | | | | | | | | | | | | |
|---|---|---|---|---|---|---|---|---|---|---|---|---|---|---|
| 6067001300 | 35.42 | 69.24 | 65-70% | 3005 | Sacramento | 3.6 | 92.3 | 4.1 | 17.1 | 66.7 | 5.6 | 0.8 | 5.9 | 3.8 |
| 6019005606 | 35.40 | 69.23 | 65-70% | 3847 | Fresno | 14.7 | 75 | 10.3 | 22.9 | 61 | 1.9 | 1 | 10.5 | 2.7 |
| 6073010110 | 35.40 | 69.21 | 65-70% | 7298 | San Diego | 15.2 | 74.3 | 10.5 | 63.5 | 11.9 | 3.1 | 0.1 | 18.7 | 2.7 |
| 6099000201 | 35.40 | 69.20 | 65-70% | 5908 | Stanislaus | 12.8 | 71.5 | 15.7 | 18.8 | 76.9 | 0.4 | 0.8 | 0.8 | 2.3 |
| 6065046102 | 35.40 | 69.19 | 65-70% | 2027 | Riverside | 20.5 | 71.6 | 7.9 | 67.6 | 18.6 | 10.7 | 0.7 | 1.1 | 1.3 |
| 6067002700 | 35.40 | 69.18 | 65-70% | 3383 | Sacramento | 14.1 | 79.7 | 6.2 | 31.1 | 32.2 | 24.9 | 0.5 | 6 | 5.4 |
| 6037113234 | 35.39 | 69.16 | 65-70% | 4667 | Los Angeles | 14.3 | 73.9 | 11.8 | 55 | 23.8 | 3.4 | 0.2 | 15.7 | 1.8 |
| 6037235100 | 35.38 | 69.15 | 65-70% | 4520 | Los Angeles | 10.2 | 75.2 | 14.6 | 18.9 | 4.2 | 71 | 0.1 | 1.8 | 4 |
| 6037602404 | 35.36 | 69.14 | 65-70% | 5863 | Los Angeles | 15.2 | 77.4 | 7.4 | 58.2 | 9.8 | 18.5 | 0.1 | 11.3 | 2.1 |
| 6037540201 | 35.36 | 69.13 | 65-70% | 2370 | Los Angeles | 20.2 | 76.6 | 3.2 | 96.7 | 1.3 | 0.9 | 0.4 | 0.4 | 0.3 |
| 6037407301 | 35.35 | 69.11 | 65-70% | 4828 | Los Angeles | 13.7 | 76.3 | 10 | 82.3 | 6.5 | 1.4 | 0.2 | 8.9 | 0.7 |
| 6075022802 | 35.35 | 69.10 | 65-70% | 2099 | San Francisco | 6.6 | 81.9 | 11.5 | 31.5 | 39.8 | 5.1 | 0.7 | 19.2 | 3.7 |
| 6053014601 | 35.35 | 69.09 | 65-70% | 5232 | Monterey | 16.5 | 75 | 8.5 | 77.6 | 17.3 | 0.5 | 0.3 | 2.9 | 1.5 |
| 6081610202 | 35.34 | 69.08 | 65-70% | 2429 | San Mateo | 5.8 | 85.4 | 8.8 | 40.5 | 30.8 | 10.6 | 0.5 | 12.9 | 4.8 |
| 6031001500 | 35.34 | 69.06 | 65-70% | 4619 | Kings | 18.2 | 71.7 | 10.1 | 74.3 | 18.8 | 3.3 | 0.5 | 1.8 | 1.3 |
| 6037207900 | 35.33 | 69.05 | 65-70% | 4163 | Los Angeles | 4.7 | 87.2 | 8.1 | 24 | 27.8 | 7.7 | 0.2 | 37.6 | 2.7 |
| 6037293304 | 35.32 | 69.04 | 65-70% | 4178 | Los Angeles | 16 | 76.7 | 7.3 | 63 | 15.2 | 7.1 | 0.2 | 12.3 | 2.3 |
| 6059063701 | 35.32 | 69.03 | 65-70% | 6266 | Orange | 17.6 | 75 | 7.4 | 77.7 | 16.4 | 1 | 0.2 | 3.7 | 1.1 |
| 6065042406 | 35.31 | 69.01 | 65-70% | 4150 | Riverside | 14.9 | 75.2 | 9.9 | 56.6 | 23.2 | 13.8 | 0.1 | 3.7 | 2.6 |
| 6047000402 | 35.31 | 69.00 | 65-70% | 8071 | Merced | 13.9 | 72.9 | 13.2 | 21.3 | 74.7 | 0.3 | 0.3 | 1.4 | 2 |
| 6037600702 | 35.31 | 68.99 | 65-70% | 4191 | Los Angeles | 11.8 | 75 | 13.2 | 18.4 | 2 | 75.6 | 0.2 | 1.2 | 2.6 |
| 6037572400 | 35.29 | 68.97 | 65-70% | 1152 | Los Angeles | 12 | 75.6 | 12.4 | 37.8 | 5.1 | 31.6 | 0.3 | 23.1 | 2 |
| 6071025100 | 35.26 | 68.96 | 65-70% | 1688 | San Bernardino | 11.1 | 64.7 | 24.2 | 19.9 | 52 | 1.1 | 22 | 0.5 | 4.4 |
| 6037113421 | 35.26 | 68.95 | 65-70% | 6109 | Los Angeles | 14.2 | 79.1 | 6.7 | 52 | 23.1 | 8.7 | 0.2 | 13.3 | 2.6 |
| 6059088001 | 35.25 | 68.94 | 65-70% | 5004 | Orange | 12.4 | 76.6 | 11 | 35.8 | 25.9 | 1.4 | 0.2 | 34.9 | 1.9 |
| 6075025702 | 35.25 | 68.92 | 65-70% | 4665 | San Francisco | 10.1 | 75.9 | 14 | 24.5 | 10 | 2.1 | 0.2 | 61.8 | 1.3 |
| 6037310400 | 35.25 | 68.91 | 65-70% | 3379 | Los Angeles | 10.4 | 76.4 | 13.2 | 23.7 | 61 | 1 | 0.2 | 10.9 | 3.3 |
| 6071000501 | 35.24 | 68.90 | 65-70% | 6785 | San Bernardino | 13.8 | 76.9 | 9.3 | 58.7 | 27.4 | 2.3 | 0.2 | 9.9 | 1.6 |
| 6065040812 | 35.23 | 68.89 | 65-70% | 3480 | Riverside | 13 | 75 | 12 | 36.9 | 59.2 | 1 | 0.3 | 1.2 | 1.4 |
| 6029004401 | 35.22 | 68.87 | 65-70% | 7308 | Kern | 19.1 | 72.7 | 8.2 | 79.6 | 16.3 | 2.1 | 0.5 | 0.7 | 0.8 |
| 6037900701 | 35.21 | 68.86 | 65-70% | 5289 | Los Angeles | 16.9 | 73.8 | 9.3 | 39.6 | 33.4 | 20.3 | 0.4 | 2.5 | 3.8 |
| 6037119400 | 35.21 | 68.85 | 65-70% | 4987 | Los Angeles | 13.7 | 78.1 | 8.2 | 81.8 | 7.7 | 1.3 | 0.3 | 7.6 | 1.3 |
| 6037432902 | 35.20 | 68.84 | 65-70% | 3482 | Los Angeles | 11.9 | 74.1 | 14 | 39.9 | 7.4 | 0.3 | 0.1 | 51.4 | 0.8 |
| 6037195901 | 35.20 | 68.82 | 65-70% | 2235 | Los Angeles | 6.9 | 82.6 | 10.5 | 38.1 | 43.9 | 3.9 | 0.3 | 10.8 | 3 |
| 6037211120 | 35.19 | 68.81 | 65-70% | 5194 | Los Angeles | 9.5 | 82.2 | 8.3 | 27.6 | 6.1 | 3.9 | 0.1 | 60.7 | 1.6 |
| 6037132502 | 35.18 | 68.80 | 65-70% | 3672 | Los Angeles | 11 | 75.3 | 13.7 | 40 | 43.5 | 3.4 | 0.1 | 9.4 | 3.4 |
| 6007003002 | 35.18 | 68.79 | 65-70% | 3531 | Butte | 14.8 | 75.6 | 9.6 | 12.8 | 59.9 | 3.4 | 4 | 13.5 | 6.3 |
| 6065040901 | 35.17 | 68.77 | 65-70% | 6516 | Riverside | 16.1 | 78.3 | 5.6 | 47.3 | 27.3 | 8.3 | 0.5 | 13.8 | 2.8 |
| 6059074102 | 35.17 | 68.76 | 65-70% | 6819 | Orange | 15.8 | 77.4 | 6.8 | 84.4 | 4.2 | 0.9 | 0.1 | 10.2 | 0.4 |
| 6099002803 | 35.17 | 68.75 | 65-70% | 2866 | Stanislaus | 12.2 | 67.7 | 20.1 | 26 | 64.5 | 3.2 | 1 | 3.6 | 1.7 |
| 6037106649 | 35.16 | 68.74 | 65-70% | 2853 | Los Angeles | 14.1 | 76.8 | 9.1 | 63.9 | 9.6 | 3.7 | 0.3 | 21 | 1.5 |
| 6013307202 | 35.16 | 68.72 | 65-70% | 3933 | Contra Costa | 21.3 | 75.2 | 3.5 | 46.2 | 14.1 | 29.6 | 0.3 | 5.9 | 4 |
| 6037115202 | 35.16 | 68.71 | 65-70% | 4828 | Los Angeles | 10.2 | 80.7 | 9.1 | 33.2 | 36.6 | 6.3 | 0.3 | 20 | 3.6 |
| 6071007408 | 35.14 | 68.70 | 65-70% | 4181 | San Bernardino | 20.9 | 73.1 | 6 | 60 | 16 | 17.5 | 0.5 | 4 | 1.9 |
| 6081610500 | 35.14 | 68.68 | 65-70% | 4963 | San Mateo | 17.1 | 76.3 | 6.6 | 80.9 | 12.5 | 1.1 | 0.2 | 4.3 | 1 |
| 6037208501 | 35.14 | 68.67 | 65-70% | 2656 | Los Angeles | 11.4 | 77.9 | 10.7 | 44.4 | 4.6 | 1.7 | 0.2 | 47 | 2.1 |
| 6113010201 | 35.14 | 68.66 | 65-70% | 2538 | Yolo | 9.8 | 76.3 | 13.9 | 27.6 | 61.5 | 1.3 | 1.3 | 5 | 3.2 |
| 6075023003 | 35.13 | 68.65 | 65-70% | 4093 | San Francisco | 10.6 | 76.8 | 12.6 | 23.5 | 6.9 | 24.8 | 0.1 | 42.4 | 2.3 |
| 6021010400 | 35.12 | 68.63 | 65-70% | 7636 | Glenn | 16 | 71 | 13 | 30.9 | 60 | 0.9 | 1.8 | 4.4 | 2 |
| 6067004100 | 35.10 | 68.62 | 65-70% | 5015 | Sacramento | 15 | 72.1 | 12.9 | 32.8 | 17.7 | 15.5 | 0.6 | 28.5 | 4.9 |
| 6037701701 | 35.09 | 68.61 | 65-70% | 3196 | Los Angeles | 7.2 | 79.8 | 13 | 15.9 | 64 | 2.8 | 0.1 | 12.4 | 4.8 |
| 6037502901 | 35.08 | 68.60 | 65-70% | 5413 | Los Angeles | 12.4 | 77.6 | 10 | 78.6 | 15.2 | 0.7 | 0.2 | 3.8 | 1.5 |
| 6071002305 | 35.07 | 68.58 | 65-70% | 10725 | San Bernardino | 16.1 | 78.8 | 5.1 | 62.5 | 16.6 | 10.6 | 0.2 | 8.3 | 1.9 |
| 6037132900 | 35.06 | 68.57 | 65-70% | 3461 | Los Angeles | 10.6 | 74.6 | 14.8 | 22.1 | 62 | 2.9 | 0.4 | 8 | 4.4 |
| 6013316000 | 35.06 | 68.56 | 65-70% | 1483 | Contra Costa | 5.5 | 89.4 | 5.1 | 20.9 | 52.3 | 18.8 | 0.8 | 3.5 | 3.6 |
| 6059087703 | 35.06 | 68.55 | 65-70% | 6246 | Orange | 13.8 | 77.7 | 8.5 | 56.4 | 19.6 | 0.7 | 0.2 | 21 | 2.2 |
| 6077005303 | 35.04 | 68.53 | 65-70% | 4694 | San Joaquin | 17.5 | 73.6 | 8.9 | 57 | 32.6 | 4.3 | 0.5 | 3 | 2.6 |
| 6073016617 | 35.02 | 68.52 | 65-70% | 3102 | San Diego | 11.9 | 66.3 | 21.8 | 19.1 | 71 | 2.3 | 0.7 | 3.8 | 3.1 |
| 6037212305 | 35.02 | 68.51 | 65-70% | 2865 | Los Angeles | 15.1 | 80.5 | 4.4 | 74.5 | 3.5 | 3.6 | 0.1 | 17.2 | 1.1 |
| 6001402600 | 35.00 | 68.50 | 65-70% | 1151 | Alameda | 7.9 | 66.5 | 25.6 | 5.7 | 11.3 | 29.5 | 0.3 | 50.7 | 2.4 |
| 6077004102 | 34.99 | 68.48 | 65-70% | 8072 | San Joaquin | 15.4 | 73.5 | 11.1 | 25.9 | 28.5 | 6.6 | 0.3 | 35.5 | 3.2 |
| 6037211804 | 34.98 | 68.47 | 65-70% | 3221 | Los Angeles | 10.5 | 80.5 | 9 | 23.4 | 6 | 4 | 0 | 64.7 | 1.8 |
| 6075026401 | 34.98 | 68.46 | 65-70% | 4044 | San Francisco | 11.1 | 74.6 | 14.3 | 19.7 | 4.2 | 9.9 | 0.2 | 64.4 | 1.7 |
| 6081611800 | 34.98 | 68.44 | 65-70% | 4433 | San Mateo | 16.7 | 75.9 | 7.4 | 63.1 | 1.8 | 20.8 | 0.1 | 12 | 2.2 |
| 6039000604 | 34.97 | 68.43 | 65-70% | 5467 | Madera | 22.2 | 72.7 | 5.1 | 89.5 | 6.3 | 2.6 | 0.5 | 0.4 | 0.7 |
| 6047001004 | 34.96 | 68.42 | 65-70% | 3968 | Merced | 13.5 | 68.3 | 18.2 | 35.5 | 42.4 | 10.9 | 0.5 | 7.7 | 2.9 |

| | | | | | | | | | | | | | | |
|---|---|---|---|---|---|---|---|---|---|---|---|---|---|---|
| 6075061400 | 34.96 | 68.41 | 65-70% | 5395 | San Francisco | 14 | 79.2 | 6.8 | 16.9 | 46.2 | 16.4 | 0.4 | 15.6 | 4.5 |
| 6067007004 | 34.95 | 68.39 | 65-70% | 7533 | Sacramento | 17.5 | 79.2 | 3.3 | 43.2 | 21.5 | 17.3 | 0.4 | 12.8 | 4.8 |
| 6065042744 | 34.94 | 68.38 | 65-70% | 3726 | Riverside | 15.5 | 75.8 | 8.7 | 56.5 | 39.8 | 0.8 | 0.9 | 0.3 | 1.6 |
| 6037702803 | 34.94 | 68.37 | 65-70% | 2963 | Los Angeles | 10.8 | 75.1 | 14.1 | 43.6 | 42 | 3.2 | 0 | 8.1 | 3.2 |
| 6065040904 | 34.93 | 68.36 | 65-70% | 3655 | Riverside | 14.2 | 76.4 | 9.4 | 64.3 | 25.3 | 3.3 | 0.9 | 4.7 | 1.6 |
| 6059011722 | 34.93 | 68.34 | 65-70% | 2363 | Orange | 8.1 | 61.2 | 30.7 | 28.1 | 50.1 | 2.9 | 0.5 | 17.1 | 1.3 |
| 6037406602 | 34.93 | 68.33 | 65-70% | 4973 | Los Angeles | 13.1 | 75.5 | 11.4 | 63.7 | 14 | 3.1 | 0 | 18.1 | 1.1 |
| 6059089105 | 34.93 | 68.32 | 65-70% | 6387 | Orange | 20.7 | 75.5 | 3.8 | 87.8 | 1.4 | 0.1 | 0 | 10.3 | 0.2 |
| 6037480803 | 34.90 | 68.31 | 65-70% | 3464 | Los Angeles | 11.6 | 74.7 | 13.7 | 58.9 | 13 | 1 | 0 | 25.2 | 1.9 |
| 6111004716 | 34.90 | 68.29 | 65-70% | 4476 | Ventura | 16.9 | 76 | 7.1 | 80 | 6.6 | 1 | 0 | 11.4 | 1 |
| 6001405901 | 34.89 | 68.28 | 65-70% | 3910 | Alameda | 15.4 | 76.1 | 8.5 | 40 | 2.9 | 13.6 | 0.5 | 40.7 | 2.3 |
| 6037131702 | 34.89 | 68.27 | 65-70% | 3751 | Los Angeles | 12.4 | 78.3 | 9.3 | 53.1 | 27.2 | 5.3 | 0.1 | 12.8 | 1.5 |
| 6037189102 | 34.89 | 68.26 | 65-70% | 3096 | Los Angeles | 4.6 | 80 | 15.4 | 11.3 | 71.5 | 2 | 0.2 | 11.8 | 3.2 |
| 6037134101 | 34.88 | 68.24 | 65-70% | 4922 | Los Angeles | 13 | 75.6 | 11.4 | 41.1 | 26.4 | 3.6 | 0.1 | 25.9 | 2.9 |
| 6037199300 | 34.88 | 68.23 | 65-70% | 3848 | Los Angeles | 12.6 | 75.9 | 11.5 | 67.2 | 17.1 | 2.7 | 0.5 | 10.4 | 2.2 |
| 6037201503 | 34.88 | 68.22 | 65-70% | 3323 | Los Angeles | 18 | 73.4 | 8.6 | 91.8 | 2.6 | 0.3 | 0 | 4.9 | 0.4 |
| 6073012402 | 34.88 | 68.21 | 65-70% | 5445 | San Diego | 16 | 73.1 | 10.9 | 68.6 | 19.2 | 4.7 | 0.3 | 4.8 | 2.4 |
| 6013314200 | 34.87 | 68.19 | 65-70% | 6482 | Contra Costa | 18.1 | 75.9 | 6 | 69.1 | 19.6 | 3.5 | 0.2 | 5.3 | 2.3 |
| 6065040606 | 34.87 | 68.18 | 65-70% | 3329 | Riverside | 18 | 75.6 | 6.4 | 77.1 | 20.6 | 0.9 | 0.2 | 0.4 | 0.7 |
| 6059086901 | 34.87 | 68.17 | 65-70% | 8725 | Orange | 16.3 | 73.6 | 10.1 | 50.1 | 23.7 | 4.3 | 0.3 | 19.2 | 2.5 |
| 6029006301 | 34.86 | 68.15 | 65-70% | 4004 | Kern | 17.5 | 73.4 | 9.1 | 90.1 | 7.9 | 0.4 | 0.2 | 0.7 | 0.6 |
| 6037107020 | 34.85 | 68.14 | 65-70% | 5404 | Los Angeles | 17 | 77.3 | 5.7 | 85.3 | 5.6 | 1 | 0.4 | 6.4 | 1.3 |
| 6053001300 | 34.85 | 68.13 | 65-70% | 2548 | Monterey | 17.4 | 74.7 | 7.9 | 79.6 | 12.2 | 2.3 | 0.7 | 3.7 | 1.6 |
| 6065042509 | 34.85 | 68.12 | 65-70% | 3193 | Riverside | 15.3 | 76.1 | 8.6 | 64.9 | 18.6 | 9.9 | 0.1 | 4.4 | 2.1 |
| 6085503204 | 34.84 | 68.10 | 65-70% | 8175 | Santa Clara | 16.8 | 75.7 | 7.5 | 55.7 | 7.9 | 3.1 | 0.2 | 31.6 | 1.5 |
| 6107000402 | 34.84 | 68.09 | 65-70% | 7002 | Tulare | 18.5 | 71.6 | 9.9 | 74.6 | 21.1 | 0.2 | 0.3 | 2.7 | 1.1 |
| 6037407400 | 34.83 | 68.08 | 65-70% | 2133 | Los Angeles | 11.5 | 75.7 | 12.8 | 52.8 | 7.7 | 3.4 | 0.2 | 34.3 | 1.5 |
| 6065040202 | 34.83 | 68.07 | 65-70% | 2821 | Riverside | 15.1 | 74.6 | 10.3 | 48.7 | 42.3 | 4.2 | 0.6 | 2.3 | 1.8 |
| 6037551000 | 34.81 | 68.05 | 65-70% | 7200 | Los Angeles | 12.5 | 74.8 | 12.7 | 63.8 | 23.9 | 1.8 | 0.1 | 9 | 1.4 |
| 6037189902 | 34.81 | 68.04 | 65-70% | 4971 | Los Angeles | 3 | 86.3 | 10.7 | 10.3 | 75.9 | 4.1 | 0.2 | 6.1 | 3.5 |
| 6037900806 | 34.81 | 68.03 | 65-70% | 3620 | Los Angeles | 14.8 | 65.7 | 19.5 | 34.3 | 31.5 | 27.3 | 0.9 | 2.2 | 3.8 |
| 6071000113 | 34.80 | 68.02 | 65-70% | 11112 | San Bernardino | 14.7 | 77 | 8.3 | 50.6 | 27 | 2.7 | 0.4 | 17.1 | 2.3 |
| 6037702600 | 34.80 | 68.00 | 65-70% | 6069 | Los Angeles | 11.1 | 68.5 | 20.4 | 17.8 | 53.1 | 5 | 0.2 | 18.4 | 5.4 |
| 6077004402 | 34.80 | 67.99 | 65-70% | 4998 | San Joaquin | 15.9 | 74.7 | 9.4 | 36 | 51.3 | 0.9 | 0.6 | 8.2 | 2.9 |
| 6107002008 | 34.79 | 67.98 | 65-70% | 2769 | Tulare | 16.8 | 65.1 | 18.1 | 45.3 | 46.4 | 3.8 | 0.8 | 1.6 | 2.1 |
| 6037117202 | 34.78 | 67.97 | 65-70% | 2471 | Los Angeles | 10 | 75.6 | 14.4 | 36.9 | 31 | 4.5 | 0.1 | 25.2 | 2.3 |
| 6037201200 | 34.78 | 67.95 | 65-70% | 2519 | Los Angeles | 15.6 | 76.3 | 8.1 | 89.3 | 3 | 0.4 | 0.1 | 6.9 | 0.2 |
| 6059087103 | 34.78 | 67.94 | 65-70% | 8470 | Orange | 14 | 75.6 | 10.4 | 44 | 25.5 | 2.1 | 0.4 | 25.9 | 2 |
| 6037501300 | 34.78 | 67.93 | 65-70% | 7238 | Los Angeles | 13.2 | 76.2 | 10.6 | 74.2 | 21.7 | 0.5 | 0.2 | 2.2 | 1.2 |
| 6001406500 | 34.76 | 67.92 | 65-70% | 5930 | Alameda | 15 | 76.9 | 8.1 | 44 | 8.5 | 19.7 | 0.5 | 24.5 | 2.9 |
| 6037910403 | 34.76 | 67.90 | 65-70% | 2235 | Los Angeles | 25.9 | 71 | 3.1 | 77.4 | 9.1 | 11.1 | 0 | 0.8 | 1.6 |
| 6059074806 | 34.75 | 67.89 | 65-70% | 5057 | Orange | 20.4 | 74.5 | 5.1 | 94.3 | 1.2 | 1.7 | 0.1 | 2.5 | 0.1 |
| 6077003217 | 34.73 | 67.88 | 65-70% | 3201 | San Joaquin | 18.8 | 74.3 | 6.9 | 33.9 | 19 | 19.3 | 0.2 | 22.8 | 4.9 |
| 6037212410 | 34.72 | 67.86 | 65-70% | 3903 | Los Angeles | 11.2 | 81 | 7.8 | 47.8 | 6.4 | 3.3 | 0.1 | 41.2 | 1.2 |
| 6037134103 | 34.71 | 67.85 | 65-70% | 4193 | Los Angeles | 12.5 | 73.6 | 13.9 | 42 | 33.5 | 4.7 | 0.1 | 17.7 | 2 |
| 6065041904 | 34.70 | 67.84 | 65-70% | 4786 | Riverside | 13.9 | 77.4 | 8.7 | 41.2 | 48 | 2.1 | 0.7 | 5.7 | 2.3 |
| 6019004409 | 34.70 | 67.83 | 65-70% | 3486 | Fresno | 12.7 | 75.7 | 11.6 | 32 | 54.2 | 4 | 0.7 | 6.1 | 3 |
| 6037218110 | 34.70 | 67.81 | 65-70% | 3453 | Los Angeles | 13.2 | 77.5 | 9.3 | 54.6 | 5.6 | 23.2 | 0.1 | 14.5 | 1.9 |
| 6077005307 | 34.69 | 67.80 | 65-70% | 3214 | San Joaquin | 17.3 | 75.7 | 7 | 45.5 | 34.5 | 6.3 | 0.5 | 8.6 | 4.6 |
| 6059086305 | 34.68 | 67.79 | 65-70% | 4006 | Orange | 10.2 | 74 | 15.8 | 42.3 | 38.4 | 1.2 | 0.2 | 16.6 | 1.3 |
| 6037134303 | 34.68 | 67.78 | 65-70% | 5057 | Los Angeles | 11.9 | 74.6 | 13.5 | 35.3 | 42.4 | 3 | 0.2 | 15.6 | 3.6 |
| 6059052410 | 34.68 | 67.76 | 65-70% | 5403 | Orange | 10.4 | 71 | 18.6 | 29.1 | 53.4 | 1.4 | 0.4 | 13.4 | 2.4 |
| 6085503207 | 34.67 | 67.75 | 65-70% | 3938 | Santa Clara | 12.5 | 77.4 | 10.1 | 19.7 | 7.5 | 2.6 | 0.2 | 68.9 | 1 |
| 6001427200 | 34.67 | 67.74 | 65-70% | 4107 | Alameda | 9.6 | 79.3 | 11.1 | 14.4 | 39.4 | 5.3 | 0.6 | 34.7 | 5.6 |
| 6007001000 | 34.67 | 67.73 | 65-70% | 4801 | Butte | 6.1 | 90 | 3.9 | 15.7 | 77.1 | 1.2 | 0.8 | 1.6 | 3.6 |
| 6101050501 | 34.66 | 67.71 | 65-70% | 6182 | Sutter | 14 | 75 | 11 | 23 | 36.4 | 1.8 | 1.2 | 32.9 | 4.7 |
| 6019001412 | 34.63 | 67.70 | 65-70% | 2790 | Fresno | 13.5 | 74.6 | 11.9 | 32.7 | 38.5 | 3.7 | 0.7 | 22.1 | 2.4 |
| 6065031501 | 34.62 | 67.69 | 65-70% | 7387 | Riverside | 11.8 | 78.5 | 9.7 | 46.1 | 40.5 | 5.5 | 0.5 | 4.1 | 3.2 |
| 6037212610 | 34.62 | 67.68 | 65-70% | 4074 | Los Angeles | 9.4 | 79.6 | 11 | 33 | 8.1 | 5 | 0 | 52.1 | 1.8 |
| 6073014803 | 34.61 | 67.66 | 65-70% | 4690 | San Diego | 9 | 70.2 | 20.8 | 16.3 | 65.7 | 5.9 | 0.3 | 7.4 | 4.3 |
| 6037311100 | 34.60 | 67.65 | 65-70% | 3897 | Los Angeles | 10.6 | 76.3 | 13.1 | 39.1 | 45.7 | 1.8 | 0.3 | 10.8 | 2.3 |
| 6071010014 | 34.59 | 67.64 | 65-70% | 4800 | San Bernardino | 20.8 | 73.2 | 6 | 66.1 | 23.6 | 6.5 | 0.5 | 1.4 | 2 |
| 6067007403 | 34.59 | 67.63 | 65-70% | 4537 | Sacramento | 15.4 | 73.9 | 10.7 | 28.7 | 50 | 9.3 | 0.8 | 5.4 | 5.8 |
| 6059099223 | 34.57 | 67.61 | 65-70% | 5102 | Orange | 11.9 | 71.7 | 16.4 | 16.1 | 17.8 | 0.5 | 0.2 | 63.5 | 1.9 |
| 6073010012 | 34.57 | 67.60 | 65-70% | 4581 | San Diego | 15.8 | 76.4 | 7.8 | 94.8 | 2.4 | 0.7 | 0.1 | 1.5 | 0.5 |
| 6037481201 | 34.57 | 67.59 | 65-70% | 3598 | Los Angeles | 10.6 | 77.5 | 11.9 | 23 | 16.1 | 0.9 | 0.1 | 58.3 | 1.6 |

| | | | | | | | | | | | | | | |
|---|---|---|---|---|---|---|---|---|---|---|---|---|---|---|
| 6077003106 | 34.56 | 67.57 | 65-70% | 3600 | San Joaquin | 11.8 | 65.2 | 23 | 22.8 | 58.4 | 6.4 | 0.3 | 8.1 | 3.9 |
| 6071003605 | 34.56 | 67.56 | 65-70% | 4223 | San Bernardino | 16.6 | 78.2 | 5.2 | 73.5 | 12.3 | 9.4 | 0.2 | 3 | 1.6 |
| 6037404202 | 34.55 | 67.55 | 65-70% | 3366 | Los Angeles | 12.3 | 80.6 | 7.1 | 57.5 | 27.9 | 3.3 | 0.3 | 8.7 | 2.3 |
| 6037141302 | 34.55 | 67.54 | 65-70% | 5504 | Los Angeles | 8.4 | 80.4 | 11.2 | 11.7 | 70.5 | 5.5 | 0.1 | 8.4 | 3.7 |
| 6001444500 | 34.54 | 67.52 | 65-70% | 6696 | Alameda | 16.6 | 76.3 | 7.1 | 39.9 | 19.1 | 5.5 | 0.2 | 31.3 | 4 |
| 6071011900 | 34.54 | 67.51 | 65-70% | 3567 | San Bernardino | 13.3 | 73.3 | 13.4 | 34.7 | 56.9 | 3.4 | 1.1 | 1.6 | 2.4 |
| 6071012101 | 34.51 | 67.50 | 65-70% | 5565 | San Bernardino | 11.7 | 69.7 | 18.6 | 21.8 | 61 | 9.3 | 0.6 | 4 | 3.3 |
| 6085501700 | 34.50 | 67.49 | 65-70% | 4916 | Santa Clara | 17.5 | 77.6 | 4.9 | 84 | 9.8 | 1.7 | 0.2 | 3.2 | 1.1 |
| 6037407101 | 34.50 | 67.47 | 65-70% | 4834 | Los Angeles | 15.5 | 74.6 | 9.9 | 89.7 | 4.6 | 0.5 | 0.3 | 4.3 | 0.7 |
| 6001405902 | 34.49 | 67.46 | 65-70% | 3035 | Alameda | 12.6 | 77.1 | 10.3 | 23.2 | 5.8 | 14.2 | 0.2 | 53.7 | 3 |
| 6101050900 | 34.46 | 67.45 | 65-70% | 1561 | Sutter | 13.2 | 73.8 | 13 | 40.1 | 53.5 | 0.2 | 2.4 | 1.6 | 2.2 |
| 6037551300 | 34.46 | 67.44 | 65-70% | 5422 | Los Angeles | 13.4 | 72.7 | 13.9 | 71.9 | 18 | 3.9 | 0.2 | 4.9 | 1 |
| 6065040902 | 34.45 | 67.42 | 65-70% | 5040 | Riverside | 9.6 | 74.7 | 15.7 | 39.8 | 42.8 | 4.5 | 0.4 | 10.2 | 2.4 |
| 6059088402 | 34.45 | 67.41 | 65-70% | 4854 | Orange | 15.2 | 76.6 | 8.2 | 58.4 | 16.7 | 1.6 | 0.1 | 21.7 | 1.5 |
| 6067007202 | 34.44 | 67.40 | 65-70% | 4065 | Sacramento | 12.8 | 76.2 | 11 | 21.2 | 65.3 | 3 | 0.6 | 6.9 | 3 |
| 6031000402 | 34.42 | 67.39 | 65-70% | 5280 | Kings | 14.8 | 75.7 | 9.5 | 39 | 45.8 | 5.8 | 0.5 | 5.6 | 3.3 |
| 6065050900 | 34.41 | 67.37 | 65-70% | 4340 | Riverside | 11.8 | 82.8 | 5.4 | 26.3 | 43.5 | 10.6 | 0.3 | 15.6 | 3.8 |
| 6013313206 | 34.40 | 67.36 | 65-70% | 5757 | Contra Costa | 17.7 | 74.3 | 8 | 57 | 12.6 | 14.9 | 0.2 | 11.6 | 3.7 |
| 6077001101 | 34.40 | 67.35 | 65-70% | 4931 | San Joaquin | 14.1 | 73.9 | 12 | 39.2 | 42.1 | 5.4 | 0.7 | 8.1 | 4.4 |
| 6037532102 | 34.37 | 67.34 | 65-70% | 3574 | Los Angeles | 13.9 | 73.3 | 12.8 | 87.6 | 6.9 | 0.1 | 0.1 | 4.9 | 0.4 |
| 6039000700 | 34.37 | 67.32 | 65-70% | 10776 | Madera | 15.1 | 70.6 | 14.3 | 50 | 42.1 | 2.1 | 0.7 | 3.2 | 1.9 |
| 6073016504 | 34.36 | 67.31 | 65-70% | 6253 | San Diego | 15.4 | 77.4 | 7.2 | 30.9 | 51.2 | 9.2 | 0.3 | 3.9 | 4.4 |
| 6057000600 | 34.36 | 67.30 | 65-70% | 6237 | Nevada | 12 | 69.1 | 18.9 | 10 | 83.2 | 0.4 | 1.1 | 1.6 | 3.6 |
| 6059075202 | 34.36 | 67.28 | 65-70% | 5753 | Orange | 17.3 | 74.8 | 7.9 | 91.9 | 3.7 | 1 | 0.2 | 2.8 | 0.3 |
| 6031001401 | 34.35 | 67.27 | 65-70% | 3002 | Kings | 19.7 | 75 | 5.3 | 85.3 | 11.1 | 1.7 | 0.1 | 0.8 | 1 |
| 6085503709 | 34.35 | 67.26 | 65-70% | 5088 | Santa Clara | 13.6 | 75.4 | 11 | 35.3 | 2.1 | 1.1 | 0.1 | 60.3 | 1.1 |
| 6073004600 | 34.35 | 67.25 | 65-70% | 1940 | San Diego | 5.3 | 89.5 | 5.2 | 33.4 | 53 | 5.7 | 0.5 | 4.1 | 3.4 |
| 6037211910 | 34.34 | 67.23 | 65-70% | 4657 | Los Angeles | 13.6 | 81.4 | 5 | 61.4 | 7.4 | 5.9 | 0.2 | 23.3 | 1.8 |
| 6065044200 | 34.33 | 67.22 | 65-70% | 5701 | Riverside | 19.5 | 73.8 | 6.7 | 56.3 | 17.9 | 16.1 | 1.4 | 5.3 | 2.9 |
| 6037554522 | 34.33 | 67.21 | 65-70% | 4787 | Los Angeles | 9.2 | 71.9 | 18.9 | 15.9 | 20.3 | 6.6 | 0.3 | 53.5 | 3.5 |
| 6085503712 | 34.31 | 67.20 | 65-70% | 4108 | Santa Clara | 14.8 | 67.2 | 18 | 45 | 5.6 | 2.7 | 0.2 | 44.4 | 2.1 |
| 6019006603 | 34.29 | 67.18 | 65-70% | 2047 | Fresno | 16.2 | 73.1 | 10.7 | 61.7 | 30.7 | 2.6 | 0.3 | 3.5 | 1.1 |
| 6073016000 | 34.25 | 67.17 | 65-70% | 2419 | San Diego | 11.5 | 75.9 | 12.6 | 24.9 | 62.5 | 3.6 | 0.2 | 4.1 | 4.8 |
| 6059075302 | 34.25 | 67.16 | 65-70% | 4481 | Orange | 14.7 | 77.3 | 8 | 79.2 | 13.3 | 1.7 | 0.1 | 5 | 0.8 |
| 6065045703 | 34.25 | 67.15 | 65-70% | 5708 | Riverside | 20.7 | 74.5 | 4.8 | 98 | 1.3 | 0.2 | 0.1 | 0.3 | 0.1 |
| 6067008908 | 34.24 | 67.13 | 65-70% | 4835 | Sacramento | 11.6 | 69 | 19.4 | 21.6 | 59.9 | 6.3 | 0.7 | 7.3 | 4.2 |
| 6065041406 | 34.24 | 67.12 | 65-70% | 5968 | Riverside | 16.1 | 79.4 | 4.5 | 44.4 | 31.9 | 8.6 | 0.3 | 11.9 | 2.9 |
| 6013302007 | 34.22 | 67.11 | 65-70% | 6347 | Contra Costa | 16.2 | 76.1 | 7.7 | 40.2 | 42.4 | 6.8 | 0.4 | 6.6 | 3.6 |
| 6083000804 | 34.22 | 67.10 | 65-70% | 7189 | Santa Barbara | 13.6 | 78.4 | 8 | 71.3 | 23.1 | 2.1 | 0.7 | 1.4 | 1.3 |
| 6037462002 | 34.21 | 67.08 | 65-70% | 3942 | Los Angeles | 17.3 | 76.2 | 6.5 | 69.1 | 6.8 | 18.8 | 0.1 | 4.3 | 0.8 |
| 6095252606 | 34.21 | 67.07 | 65-70% | 5148 | Solano | 17.2 | 71.7 | 11.1 | 44.4 | 21.5 | 16.9 | 0.1 | 11.5 | 5.6 |
| 6025012301 | 34.19 | 67.06 | 65-70% | 5633 | Imperial | 2.9 | 93.2 | 3.9 | 51.1 | 19.3 | 27.5 | 0.4 | 1.2 | 0.5 |
| 6001400800 | 34.19 | 67.05 | 65-70% | 3594 | Alameda | 9.4 | 78.3 | 12.3 | 10.2 | 31.6 | 40.7 | 0.4 | 12.1 | 5 |
| 6077004302 | 34.18 | 67.03 | 65-70% | 5718 | San Joaquin | 13.9 | 65.7 | 20.4 | 31.3 | 60 | 0.7 | 0.4 | 5.4 | 2.2 |
| 6037132501 | 34.18 | 67.02 | 65-70% | 3763 | Los Angeles | 11.1 | 69.7 | 19.2 | 47.8 | 36.2 | 3 | 0.2 | 10.9 | 1.9 |
| 6059089104 | 34.18 | 67.01 | 65-70% | 5376 | Orange | 18.3 | 74.6 | 7.1 | 71.3 | 5.2 | 0.6 | 0.1 | 22.2 | 0.5 |
| 6071004505 | 34.17 | 66.99 | 65-70% | 4724 | San Bernardino | 17.6 | 74.5 | 7.9 | 49.3 | 30.9 | 15.1 | 0.7 | 1.1 | 2.9 |
| 6085503401 | 34.17 | 66.98 | 65-70% | 4915 | Santa Clara | 17.9 | 74.8 | 7.3 | 81.3 | 2.5 | 1.4 | 0.1 | 14 | 0.8 |
| 6037701802 | 34.15 | 66.97 | 65-70% | 4463 | Los Angeles | 8.3 | 82.8 | 8.9 | 32.7 | 41.7 | 13.7 | 0.2 | 8.3 | 3.4 |
| 6059011504 | 34.15 | 66.96 | 65-70% | 5473 | Orange | 5.1 | 92.6 | 2.3 | 25.4 | 41 | 5 | 0.3 | 24 | 4.2 |
| 6099001001 | 34.14 | 66.94 | 65-70% | 6042 | Stanislaus | 11.4 | 70.8 | 17.8 | 22.9 | 68.6 | 2.4 | 0.5 | 3.1 | 2.7 |
| 6107002602 | 34.13 | 66.93 | 65-70% | 5561 | Tulare | 20.1 | 72.1 | 7.8 | 84.3 | 11.1 | 0.1 | 0.1 | 3.9 | 0.5 |
| 6013307102 | 34.12 | 66.92 | 65-70% | 5038 | Contra Costa | 16.9 | 73.9 | 9.2 | 49.4 | 34.7 | 8.6 | 1 | 3 | 3.3 |
| 6031001001 | 34.11 | 66.91 | 65-70% | 4176 | Kings | 14.3 | 72.2 | 13.5 | 34.9 | 48.8 | 4.3 | 0.6 | 8.7 | 2.6 |
| 6001403100 | 34.09 | 66.89 | 65-70% | 2238 | Alameda | 2.9 | 91.3 | 5.8 | 14.3 | 18.2 | 30.3 | 0.2 | 33.9 | 3.1 |
| 6029005004 | 34.09 | 66.88 | 65-70% | 7219 | Kern | 18.9 | 72.8 | 8.3 | 78.6 | 8.1 | 0.6 | 0.2 | 11 | 1.5 |
| 6029003124 | 34.08 | 66.87 | 65-70% | 5414 | Kern | 15.6 | 78 | 6.4 | 46.3 | 36.3 | 5.9 | 0.4 | 8.8 | 2.4 |
| 6059088601 | 34.08 | 66.86 | 65-70% | 6305 | Orange | 12.4 | 75.4 | 12.2 | 32.5 | 16.8 | 1.1 | 0.3 | 48.1 | 1.2 |
| 6095251600 | 34.07 | 66.84 | 65-70% | 2359 | Solano | 14.5 | 77.9 | 7.6 | 28.3 | 29.6 | 24.4 | 0.5 | 10.4 | 6.7 |
| 6037212420 | 34.06 | 66.83 | 65-70% | 3228 | Los Angeles | 11.8 | 80.5 | 7.7 | 55.5 | 5.4 | 4.1 | 0 | 33.7 | 1.3 |
| 6053001802 | 34.05 | 66.82 | 65-70% | 5078 | Monterey | 16.9 | 78.5 | 4.6 | 68.4 | 17.9 | 3 | 0.3 | 8.1 | 2.4 |
| 6075061000 | 34.05 | 66.81 | 65-70% | 3610 | San Francisco | 10.6 | 78.6 | 10.8 | 16.5 | 10.9 | 13.1 | 0.5 | 55.1 | 3.9 |
| 6099000905 | 34.05 | 66.79 | 65-70% | 6102 | Stanislaus | 13.5 | 70.7 | 15.8 | 21.3 | 66 | 3 | 0.6 | 5.4 | 3.7 |
| 6099002801 | 34.03 | 66.78 | 65-70% | 5624 | Stanislaus | 16.3 | 75.2 | 8.5 | 37.1 | 57.9 | 0.9 | 0.6 | 1.3 | 2.3 |
| 6037183810 | 34.03 | 66.77 | 65-70% | 4369 | Los Angeles | 17 | 77.7 | 5.3 | 87.5 | 6.3 | 1.2 | 0.1 | 3.6 | 1.2 |
| 6037701702 | 34.03 | 66.75 | 65-70% | 3106 | Los Angeles | 6.5 | 82.2 | 11.3 | 19.3 | 59 | 7.8 | 0.2 | 9.1 | 4.6 |

| | | | | | | | | | | | | | | | |
|---|---|---|---|---|---|---|---|---|---|---|---|---|---|---|---|
| 6001400900 | 34.02 | 66.74 | 65-70% | 2302 | Alameda | 10.8 | 79.7 | 9.5 | 13.3 | 31 | 43.7 | 0.3 | 5.8 | 6 |
| 6073013104 | 34.00 | 66.73 | 65-70% | 5893 | San Diego | 15.9 | 75.2 | 8.9 | 73.2 | 12.6 | 6.2 | 0.3 | 5.3 | 2.5 |
| 6059075514 | 34.00 | 66.72 | 65-70% | 3703 | Orange | 17.1 | 76.6 | 6.3 | 66.3 | 15.9 | 2.3 | 0.1 | 13.8 | 1.6 |
| 6037265201 | 34.00 | 66.70 | 65-70% | 2608 | Los Angeles | 6.7 | 76.2 | 17.1 | 4.9 | 76.1 | 0.8 | 0 | 13.3 | 4.9 |
| 6037551402 | 33.98 | 66.69 | 65-70% | 4468 | Los Angeles | 13 | 76.3 | 10.7 | 67.6 | 20.3 | 2.4 | 0.2 | 8.3 | 1.1 |
| 6085503210 | 33.97 | 66.68 | 65-70% | 4453 | Santa Clara | 16.3 | 76.6 | 7.1 | 46.6 | 4.7 | 2.2 | 0.1 | 44.7 | 1.7 |
| 6115040901 | 33.96 | 66.67 | 65-70% | 2783 | Yuba | 12.5 | 73.8 | 13.7 | 17.1 | 65.1 | 0.7 | 2.1 | 10.6 | 4.3 |
| 6007003300 | 33.96 | 66.65 | 65-70% | 4852 | Butte | 11.3 | 71.3 | 17.4 | 16.2 | 71 | 1.2 | 4.4 | 2.8 | 4.4 |
| 6065043812 | 33.95 | 66.64 | 65-70% | 5409 | Riverside | 0.2 | 17.3 | 82.5 | 6.3 | 88.2 | 2.1 | 0.2 | 2.7 | 0.5 |
| 6073018200 | 33.95 | 66.63 | 65-70% | 6847 | San Diego | 16.5 | 76.7 | 6.8 | 55.8 | 36.7 | 2.6 | 0.5 | 2.2 | 2.2 |
| 6037134903 | 33.94 | 66.62 | 65-70% | 4216 | Los Angeles | 11.9 | 84.8 | 3.3 | 39.2 | 30.5 | 8.4 | 0.2 | 18 | 3.7 |
| 6037600601 | 33.93 | 66.60 | 65-70% | 2461 | Los Angeles | 9.7 | 70 | 20.3 | 7.3 | 1.2 | 88.6 | 0.2 | 0.6 | 2.1 |
| 6059021821 | 33.93 | 66.59 | 65-70% | 6582 | Orange | 14.7 | 79 | 6.3 | 29 | 42 | 2.6 | 0.4 | 23.2 | 2.8 |
| 6067008910 | 33.93 | 66.58 | 65-70% | 3486 | Sacramento | 12.3 | 73.4 | 14.3 | 17.8 | 60.3 | 9.8 | 1.1 | 4.9 | 6.1 |
| 6073003401 | 33.92 | 66.57 | 65-70% | 6065 | San Diego | 14.1 | 72.9 | 13 | 39.7 | 17.7 | 24.9 | 0.3 | 14.5 | 2.9 |
| 6037920106 | 33.92 | 66.55 | 65-70% | 3110 | Los Angeles | 15.2 | 79.1 | 5.7 | 54.8 | 36.7 | 3.5 | 0.3 | 2 | 2.9 |
| 6073011802 | 33.89 | 66.54 | 65-70% | 6741 | San Diego | 19.8 | 73.6 | 6.6 | 76.8 | 4.5 | 4.5 | 0.1 | 12.8 | 1.3 |
| 6037107010 | 33.89 | 66.53 | 65-70% | 3247 | Los Angeles | 14.7 | 77.2 | 8.1 | 91.5 | 6.1 | 0.4 | 0.1 | 1.6 | 0.2 |
| 6059087106 | 33.88 | 66.52 | 65-70% | 5097 | Orange | 15.3 | 71.3 | 13.4 | 66.5 | 18.9 | 1.5 | 0.4 | 11.5 | 1.2 |
| 6067009110 | 33.86 | 66.50 | 65-70% | 1482 | Sacramento | 18.5 | 76.2 | 5.3 | 24.2 | 27.6 | 34.4 | 0.7 | 7.2 | 5.8 |
| 6037600801 | 33.86 | 66.49 | 65-70% | 3245 | Los Angeles | 10.7 | 71.9 | 17.4 | 10.9 | 1.2 | 84.4 | 0.1 | 0.9 | 2.6 |
| 6013307201 | 33.85 | 66.48 | 65-70% | 3467 | Contra Costa | 19.7 | 70.6 | 9.7 | 46 | 31.4 | 13.6 | 0.3 | 5.5 | 3.2 |
| 6059099903 | 33.84 | 66.46 | 65-70% | 5749 | Orange | 13.3 | 77 | 9.7 | 43.7 | 19.2 | 0.5 | 0.2 | 34.7 | 1.7 |
| 6029000102 | 33.83 | 66.45 | 65-70% | 3055 | Kern | 15.3 | 69.6 | 15.1 | 11.7 | 82.6 | 0 | 1.6 | 0.4 | 3.8 |
| 6037187300 | 33.82 | 66.44 | 65-70% | 3216 | Los Angeles | 10 | 80 | 10 | 23.4 | 51 | 2.8 | 0.2 | 18.8 | 3.9 |
| 6077005125 | 33.82 | 66.43 | 65-70% | 1859 | San Joaquin | 12.7 | 75.5 | 11.8 | 37.4 | 53.3 | 3.2 | 0.3 | 3.4 | 2.4 |
| 6037554700 | 33.81 | 66.41 | 65-70% | 4874 | Los Angeles | 15.3 | 75.3 | 9.4 | 80.9 | 4.1 | 1.8 | 0.2 | 11.6 | 1.5 |
| 6085505100 | 33.80 | 66.40 | 65-70% | 3027 | Santa Clara | 11.8 | 78.6 | 9.6 | 32.3 | 27.8 | 3.3 | 0.2 | 32.8 | 3.5 |
| 6071002306 | 33.79 | 66.39 | 65-70% | 4169 | San Bernardino | 14.5 | 79.5 | 6 | 66.8 | 11.4 | 15.1 | 0.5 | 4.4 | 1.8 |
| 6037212306 | 33.79 | 66.38 | 65-70% | 3052 | Los Angeles | 12.3 | 80.8 | 6.9 | 48.5 | 3.9 | 1.4 | 0 | 45.4 | 0.8 |
| 6059075100 | 33.78 | 66.36 | 65-70% | 9983 | Orange | 14.2 | 79.8 | 6 | 74.9 | 16.9 | 2.3 | 0.1 | 5 | 0.9 |
| 6001427600 | 33.77 | 66.35 | 65-70% | 4722 | Alameda | 13.7 | 78.7 | 7.6 | 13.6 | 23.1 | 15.7 | 0.4 | 40.6 | 6.6 |
| 6037115301 | 33.77 | 66.34 | 65-70% | 4156 | Los Angeles | 8 | 71 | 21 | 17.5 | 55.6 | 4.4 | 0.2 | 18.8 | 3.4 |
| 6059042312 | 33.77 | 66.33 | 65-70% | 9085 | Orange | 18.5 | 72.7 | 8.8 | 73.2 | 23.2 | 0.4 | 0.8 | 1.7 | 0.7 |
| 6115040301 | 33.76 | 66.31 | 65-70% | 3366 | Yuba | 20.5 | 72.2 | 7.3 | 28 | 47.9 | 3.4 | 1.6 | 13.5 | 5.6 |
| 6001427300 | 33.76 | 66.30 | 65-70% | 4896 | Alameda | 9.6 | 73.1 | 17.3 | 10.5 | 42.3 | 7.9 | 0.4 | 33.1 | 5.7 |
| 6037301501 | 33.75 | 66.29 | 65-70% | 1902 | Los Angeles | 7.7 | 76.4 | 15.9 | 8.4 | 79.4 | 0.4 | 0 | 8.4 | 3.4 |
| 6099000102 | 33.75 | 66.28 | 65-70% | 3869 | Stanislaus | 10.9 | 72.5 | 16.6 | 18.5 | 76.2 | 0.1 | 1.2 | 1.8 | 2.3 |
| 6019005805 | 33.75 | 66.26 | 65-70% | 3798 | Fresno | 19.4 | 73.5 | 7.1 | 25.2 | 42.8 | 1.9 | 0.8 | 25.6 | 3.7 |
| 6067001200 | 33.75 | 66.25 | 65-70% | 3323 | Sacramento | 2.3 | 87.3 | 10.4 | 16.2 | 63 | 8.4 | 0.8 | 7.5 | 4.1 |
| 6037701902 | 33.74 | 66.24 | 65-70% | 4016 | Los Angeles | 2.6 | 80.6 | 16.8 | 10.1 | 68.5 | 6.7 | 0.3 | 10.4 | 4 |
| 6013302006 | 33.72 | 66.23 | 65-70% | 3779 | Contra Costa | 14.2 | 80.9 | 4.9 | 31.8 | 51.8 | 7 | 0.6 | 4.7 | 4.1 |
| 6073013206 | 33.71 | 66.21 | 65-70% | 6544 | San Diego | 14.2 | 67.6 | 18.2 | 78.7 | 13.7 | 2.3 | 0.1 | 4.1 | 1.1 |
| 6025011700 | 33.70 | 66.20 | 65-70% | 4797 | Imperial | 13.6 | 76 | 10.4 | 81.3 | 15.1 | 1.8 | 0.1 | 1.1 | 0.5 |
| 6013367200 | 33.69 | 66.19 | 65-70% | 5171 | Contra Costa | 14.3 | 77.8 | 7.9 | 45.6 | 9.9 | 15.9 | 0.2 | 25.7 | 2.7 |
| 6067003000 | 33.69 | 66.17 | 65-70% | 6563 | Sacramento | 13.2 | 74.8 | 12 | 36.5 | 45 | 6.6 | 0.6 | 7 | 4.4 |
| 6037408135 | 33.67 | 66.16 | 65-70% | 4159 | Los Angeles | 12.3 | 77.2 | 10.5 | 35.3 | 5.7 | 4.5 | 0.4 | 52.1 | 2.1 |
| 6037700101 | 33.66 | 66.15 | 65-70% | 5232 | Los Angeles | 3.2 | 76.3 | 20.5 | 11.9 | 77.8 | 3.2 | 0.2 | 4.4 | 2.5 |
| 6065043216 | 33.66 | 66.14 | 65-70% | 6495 | Riverside | 14.5 | 79.1 | 6.4 | 31.4 | 51 | 4.8 | 0.8 | 8.3 | 3.7 |
| 6095251100 | 33.65 | 66.12 | 65-70% | 3271 | Solano | 15.4 | 77.1 | 7.5 | 41.9 | 24 | 19 | 0.5 | 9.5 | 5.1 |
| 6071012104 | 33.64 | 66.11 | 65-70% | 5110 | San Bernardino | 11.4 | 73.4 | 15.2 | 25.4 | 65.4 | 3.6 | 1.7 | 1.9 | 2.1 |
| 6037201110 | 33.63 | 66.10 | 65-70% | 2574 | Los Angeles | 12.6 | 76.9 | 10.5 | 81.3 | 7.1 | 1.3 | 0.3 | 9.6 | 0.4 |
| 6037482101 | 33.62 | 66.09 | 65-70% | 4568 | Los Angeles | 10 | 71.8 | 18.2 | 25 | 4.1 | 0.3 | 0.2 | 69.1 | 1.3 |
| 6101050101 | 33.62 | 66.07 | 65-70% | 6438 | Sutter | 17.1 | 71.4 | 11.5 | 28.4 | 51.4 | 4.1 | 0.9 | 10.5 | 4.6 |
| 6001437102 | 33.60 | 66.06 | 65-70% | 4251 | Alameda | 12.4 | 74.9 | 12.7 | 31.8 | 12.7 | 9.8 | 0.4 | 40.9 | 4.4 |
| 6111007611 | 33.60 | 66.05 | 65-70% | 4375 | Ventura | 18.7 | 76 | 5.3 | 83.2 | 13.3 | 0.7 | 0.2 | 1.8 | 0.8 |
| 6037482521 | 33.60 | 66.04 | 65-70% | 5754 | Los Angeles | 10.7 | 73.8 | 15.5 | 44.2 | 5.4 | 1.4 | 0.3 | 47.6 | 1.1 |
| 6013373000 | 33.60 | 66.02 | 65-70% | 4376 | Contra Costa | 18.1 | 74.1 | 7.8 | 76.8 | 5 | 10.6 | 0.2 | 6.1 | 1.3 |
| 6073020018 | 33.58 | 66.01 | 65-70% | 7708 | San Diego | 18 | 76.4 | 5.6 | 70.1 | 22.6 | 1.8 | 0.2 | 3.9 | 1.4 |
| 6019004902 | 33.56 | 66.00 | 65-70% | 1985 | Fresno | 15.5 | 73 | 11.5 | 46.5 | 44.7 | 2.5 | 0.5 | 3.2 | 2.6 |
| 6037406901 | 33.56 | 65.99 | 65-70% | 4701 | Los Angeles | 15.5 | 72.9 | 11.6 | 80.7 | 5.9 | 3.4 | 0.1 | 9.2 | 0.7 |
| 6099000806 | 33.55 | 65.97 | 65-70% | 4231 | Stanislaus | 12.2 | 73.6 | 14.2 | 29.7 | 54.1 | 3.9 | 0.6 | 7.9 | 3.8 |
| 6019004601 | 33.55 | 65.96 | 65-70% | 2641 | Fresno | 10.3 | 66.2 | 23.5 | 30.5 | 60.9 | 3.1 | 0.3 | 3.1 | 2.2 |
| 6073010109 | 33.53 | 65.95 | 65-70% | 4595 | San Diego | 14.3 | 77.3 | 8.4 | 71.2 | 8.5 | 3.7 | 0.1 | 13.9 | 2.7 |
| 6037405301 | 33.53 | 65.94 | 65-70% | 3349 | Los Angeles | 14.9 | 74.6 | 10.5 | 68.4 | 14.2 | 5 | 0.3 | 10.5 | 1.6 |
| 6059075812 | 33.52 | 65.92 | 65-70% | 6573 | Orange | 17.2 | 73.3 | 9.5 | 52.9 | 39 | 0.9 | 0.2 | 5.4 | 1.5 |

| | | | | | | | | | | | | | | | |
|---|---|---|---|---|---|---|---|---|---|---|---|---|---|---|---|
| 6071000808 | 33.52 | 65.91 | 65-70% | 5840 | San Bernardino | 11.3 | 75.9 | 12.8 | 38.1 | 47.7 | 4.7 | 0.4 | 6.8 | 2.3 |
| 6037670003 | 33.51 | 65.90 | 65-70% | 5788 | Los Angeles | 11.1 | 77.3 | 11.6 | 32.1 | 47.8 | 2.7 | 0.5 | 13 | 3.9 |
| 6037211921 | 33.50 | 65.88 | 65-70% | 2474 | Los Angeles | 11.7 | 82 | 6.3 | 44.2 | 4.6 | 4.2 | 0 | 45.6 | 1.2 |
| 6037236000 | 33.48 | 65.87 | 65-70% | 4113 | Los Angeles | 7.4 | 68.5 | 24.1 | 8.5 | 17.4 | 63.1 | 0.1 | 6.5 | 4.4 |
| 6001437300 | 33.48 | 65.86 | 65-70% | 3111 | Alameda | 13.6 | 75.8 | 10.6 | 35.4 | 16.5 | 13.4 | 0.5 | 28.8 | 5.4 |
| 6001436300 | 33.48 | 65.85 | 65-70% | 7129 | Alameda | 17.5 | 76.1 | 6.4 | 56.3 | 13.2 | 12.7 | 0.3 | 14.3 | 3.3 |
| 6037271200 | 33.47 | 65.83 | 65-70% | 2525 | Los Angeles | 6.6 | 86 | 7.4 | 33 | 33.1 | 3.8 | 0.2 | 26.9 | 3 |
| 6115040200 | 33.45 | 65.82 | 65-70% | 7767 | Yuba | 16.3 | 70.6 | 13.1 | 23.4 | 63.4 | 3.6 | 1.3 | 3.5 | 4.8 |
| 6037910402 | 33.45 | 65.81 | 65-70% | 3751 | Los Angeles | 22.3 | 72.8 | 4.9 | 70.9 | 9.7 | 16.4 | 0.2 | 0.9 | 1.8 |
| 6067006002 | 33.44 | 65.80 | 65-70% | 4624 | Sacramento | 14 | 73.1 | 12.9 | 16.4 | 64.6 | 7.8 | 0.8 | 6.1 | 4.3 |
| 6001405302 | 33.44 | 65.78 | 65-70% | 2530 | Alameda | 6.5 | 76 | 17.5 | 14.6 | 23.4 | 19.3 | 0.4 | 38 | 4.3 |
| 6075026402 | 33.44 | 65.77 | 65-70% | 4118 | San Francisco | 10.4 | 77.2 | 12.4 | 21.2 | 9 | 10.1 | 0.1 | 56.8 | 2.7 |
| 6037201401 | 33.44 | 65.76 | 65-70% | 4803 | Los Angeles | 15.5 | 75.5 | 9 | 82.1 | 3.6 | 2.9 | 0.1 | 10.6 | 0.7 |
| 6029001101 | 33.43 | 65.75 | 65-70% | 4413 | Kern | 19.6 | 73.1 | 7.3 | 68.2 | 25.1 | 3.4 | 0.9 | 0.7 | 1.7 |
| 6073016301 | 33.43 | 65.73 | 65-70% | 4919 | San Diego | 16.3 | 77.3 | 6.4 | 36.6 | 43.9 | 9.9 | 0.6 | 4.5 | 4.5 |
| 6037183520 | 33.43 | 65.72 | 65-70% | 3881 | Los Angeles | 15.6 | 77.5 | 6.9 | 85.4 | 8.8 | 1.3 | 0.2 | 3.6 | 0.8 |
| 6059088801 | 33.42 | 65.71 | 65-70% | 8343 | Orange | 13.9 | 78.5 | 7.6 | 28.1 | 12.3 | 1.5 | 0.3 | 56.3 | 1.6 |
| 6111004901 | 33.42 | 65.70 | 65-70% | 6249 | Ventura | 17.4 | 79.1 | 3.5 | 57.2 | 16.6 | 4.4 | 0.3 | 19.1 | 2.4 |
| 6001436500 | 33.42 | 65.68 | 65-70% | 4583 | Alameda | 14.4 | 80.2 | 5.4 | 36.4 | 18.6 | 17.3 | 0.5 | 22.4 | 4.8 |
| 6073013308 | 33.42 | 65.67 | 65-70% | 3731 | San Diego | 15.9 | 77.1 | 7 | 82 | 9.4 | 3.5 | 0.1 | 3.6 | 1.4 |
| 6073013306 | 33.40 | 65.66 | 65-70% | 4773 | San Diego | 13.4 | 75.3 | 11.3 | 68.7 | 17.7 | 3.6 | 0.4 | 7.7 | 2.1 |
| 6073013204 | 33.40 | 65.65 | 65-70% | 4014 | San Diego | 14 | 75 | 11 | 86.9 | 7.3 | 1.5 | 0.1 | 3.1 | 1.1 |
| 6037543701 | 33.40 | 65.63 | 65-70% | 2994 | Los Angeles | 11.8 | 77 | 11.2 | 50 | 7.5 | 1.6 | 0.1 | 39.2 | 1.6 |
| 6077003210 | 33.40 | 65.62 | 65-70% | 2800 | San Joaquin | 10.6 | 65.4 | 24 | 24.5 | 48 | 9.3 | 0.2 | 13.9 | 4.1 |
| 6059074805 | 33.39 | 65.61 | 65-70% | 5962 | Orange | 22.7 | 74.6 | 2.7 | 95.1 | 1.4 | 1.3 | 0 | 1.9 | 0.3 |
| 6037550700 | 33.39 | 65.59 | 65-70% | 6921 | Los Angeles | 13.3 | 74.6 | 12.1 | 69.3 | 20.8 | 1.5 | 0.2 | 7.1 | 1.2 |
| 6065040404 | 33.39 | 65.58 | 65-70% | 3309 | Riverside | 16 | 75.6 | 8.4 | 55 | 30.9 | 3.7 | 0.3 | 8.3 | 1.9 |
| 6001410100 | 33.38 | 65.57 | 65-70% | 2406 | Alameda | 13.5 | 75.9 | 10.6 | 17.7 | 9.7 | 61.6 | 0.6 | 6.5 | 3.9 |
| 6071000503 | 33.38 | 65.56 | 65-70% | 5270 | San Bernardino | 15.5 | 79.1 | 5.4 | 57.2 | 22.4 | 5.7 | 0.3 | 12.2 | 2 |
| 6007001100 | 33.38 | 65.54 | 65-70% | 4572 | Butte | 4.6 | 87.5 | 7.9 | 15.3 | 74 | 2.6 | 0.6 | 3.8 | 3.7 |
| 6111008700 | 33.37 | 65.53 | 65-70% | 6424 | Ventura | 16.7 | 74.3 | 9 | 79.4 | 14.7 | 2.1 | 0.3 | 1.8 | 1.7 |
| 6065040615 | 33.36 | 65.52 | 65-70% | 9024 | Riverside | 18 | 77.4 | 4.6 | 40.3 | 22.9 | 10 | 0.2 | 23.5 | 3.2 |
| 6037900602 | 33.36 | 65.51 | 65-70% | 5214 | Los Angeles | 20.1 | 72.7 | 7.2 | 57.3 | 22.9 | 15.3 | 0.3 | 1.2 | 3 |
| 6067003600 | 33.36 | 65.49 | 65-70% | 2826 | Sacramento | 14.8 | 76.2 | 9 | 51 | 26.4 | 8.2 | 1 | 10.8 | 2.6 |
| 6081602400 | 33.35 | 65.48 | 65-70% | 6679 | San Mateo | 10.4 | 69.1 | 20.5 | 24.8 | 39.7 | 1.9 | 0.1 | 29.5 | 4 |
| 6037577602 | 33.35 | 65.47 | 65-70% | 3441 | Los Angeles | 5.7 | 69.4 | 24.9 | 11.7 | 72.6 | 3.1 | 0.5 | 9.5 | 2.7 |
| 6037650101 | 33.33 | 65.46 | 65-70% | 5831 | Los Angeles | 10.9 | 69.3 | 19.8 | 17.3 | 24 | 2.1 | 0.2 | 51 | 5.4 |
| 6013378000 | 33.33 | 65.44 | 65-70% | 3435 | Contra Costa | 7.7 | 72.5 | 19.8 | 14.4 | 67.5 | 7.3 | 0.3 | 7.7 | 2.8 |
| 6059074111 | 33.32 | 65.43 | 65-70% | 5568 | Orange | 13.6 | 76.3 | 10.1 | 66.3 | 13.8 | 1.7 | 0.1 | 16.7 | 1.4 |
| 6095251200 | 33.32 | 65.42 | 65-70% | 3061 | Solano | 14.6 | 75.9 | 9.5 | 37.7 | 23.1 | 23.3 | 0.5 | 10.9 | 4.5 |
| 6037216200 | 33.31 | 65.41 | 65-70% | 4911 | Los Angeles | 7.6 | 82.3 | 10.1 | 15.1 | 38.8 | 24.7 | 0.3 | 17.1 | 4.1 |
| 6037275500 | 33.30 | 65.39 | 65-70% | 5207 | Los Angeles | 14.9 | 75.4 | 9.7 | 71 | 13 | 6.2 | 0.2 | 8.1 | 1.5 |
| 6037125600 | 33.28 | 65.38 | 65-70% | 2657 | Los Angeles | 8.8 | 75.4 | 15.8 | 13.7 | 71.5 | 4.3 | 0.2 | 6.4 | 4 |
| 6065041909 | 33.28 | 65.37 | 65-70% | 4990 | Riverside | 13 | 76.9 | 10.1 | 52.4 | 42.2 | 1.7 | 0.3 | 2 | 1.4 |
| 6037297202 | 33.27 | 65.36 | 65-70% | 3423 | Los Angeles | 13.6 | 73.2 | 13.2 | 37.6 | 50.3 | 3.7 | 0.3 | 4.2 | 3.9 |
| 6065042403 | 33.27 | 65.34 | 65-70% | 4071 | Riverside | 13.7 | 76.3 | 10 | 49 | 28.4 | 14.1 | 0.5 | 5.7 | 2.2 |
| 6059001506 | 33.27 | 65.33 | 65-70% | 4109 | Orange | 9.3 | 72 | 18.7 | 19.3 | 60 | 0.7 | 0.2 | 17 | 2.7 |
| 6067004202 | 33.26 | 65.32 | 65-70% | 5538 | Sacramento | 15.7 | 70.8 | 13.5 | 37.1 | 11.3 | 23.1 | 0.5 | 24 | 4 |
| 6037500800 | 33.26 | 65.30 | 65-70% | 5470 | Los Angeles | 13.7 | 75 | 11.3 | 91.7 | 5.7 | 0.4 | 0.2 | 1.5 | 0.5 |
| 6065042401 | 33.24 | 65.29 | 65-70% | 2082 | Riverside | 8.7 | 80.3 | 11 | 37.5 | 46.7 | 8.3 | 0.3 | 4.6 | 2.6 |
| 6037211500 | 33.23 | 65.28 | 65-70% | 4355 | Los Angeles | 11.5 | 76.8 | 11.7 | 21.8 | 36.1 | 3.7 | 0.1 | 36 | 2.2 |
| 6077004001 | 33.21 | 65.27 | 65-70% | 2508 | San Joaquin | 14.4 | 70.5 | 15.1 | 53 | 39.4 | 2 | 0.3 | 3.7 | 1.6 |
| 6059099803 | 33.20 | 65.25 | 65-70% | 5762 | Orange | 13 | 70.9 | 16.1 | 20.5 | 12.7 | 0.6 | 0.1 | 65 | 1 |
| 6065040808 | 33.20 | 65.24 | 65-70% | 7008 | Riverside | 16.8 | 72.9 | 10.3 | 57 | 27.7 | 6 | 0.3 | 7.1 | 1.9 |
| 6037482202 | 33.19 | 65.23 | 65-70% | 5229 | Los Angeles | 10.4 | 76.6 | 13 | 17.7 | 2.8 | 0.3 | 0 | 78.6 | 0.6 |
| 6083002402 | 33.17 | 65.22 | 65-70% | 11406 | Santa Barbara | 20.6 | 73.2 | 6.2 | 74 | 17.4 | 1.4 | 0.2 | 5.5 | 1.6 |
| 6099000403 | 33.16 | 65.20 | 65-70% | 4317 | Stanislaus | 9.9 | 71.5 | 18.6 | 21.8 | 68.4 | 2.1 | 0.5 | 4.1 | 3.1 |
| 6059075811 | 33.16 | 65.19 | 65-70% | 3332 | Orange | 16.4 | 75.2 | 8.4 | 57.6 | 33.9 | 0.8 | 0.2 | 5.9 | 1.6 |
| 6111000200 | 33.16 | 65.18 | 65-70% | 2822 | Ventura | 18.4 | 75 | 6.6 | 85.8 | 11.5 | 0.8 | 0.2 | 0.5 | 1.2 |
| 6071009910 | 33.14 | 65.17 | 65-70% | 4653 | San Bernardino | 14.5 | 75.5 | 10 | 47.5 | 34 | 11.4 | 0.3 | 3.8 | 3 |
| 6037431001 | 33.13 | 65.15 | 65-70% | 7171 | Los Angeles | 12.7 | 79.2 | 8.1 | 44.2 | 38.4 | 6.2 | 0.4 | 8.1 | 2.8 |
| 6071001901 | 33.12 | 65.14 | 65-70% | 5753 | San Bernardino | 13.5 | 80.3 | 6.2 | 48.4 | 31.5 | 5.1 | 0.1 | 12.6 | 2.2 |
| 6045011600 | 33.11 | 65.13 | 65-70% | 5802 | Mendocino | 16.8 | 70.1 | 13.1 | 40.2 | 49.6 | 1.2 | 2.8 | 2.9 | 3.3 |
| 6001438204 | 33.11 | 65.12 | 65-70% | 5368 | Alameda | 11.2 | 71 | 17.8 | 29 | 23.4 | 8.7 | 0.1 | 33.7 | 5 |
| 6095251902 | 33.11 | 65.10 | 65-70% | 5833 | Solano | 14.4 | 74.5 | 11.1 | 34.7 | 8.9 | 24.8 | 0.2 | 27.4 | 4 |
| 6081604101 | 33.10 | 65.09 | 65-70% | 7993 | San Mateo | 14.3 | 77.6 | 8.1 | 51.6 | 21.3 | 2 | 0.2 | 20.4 | 4.5 |

| | | | | | | | | | | | | | | | |
|---|---|---|---|---|---|---|---|---|---|---|---|---|---|---|---|
| 6037703200 | 33.09 | 65.08 | 65-70% | 5629 | Los Angeles | 9.1 | 69.4 | 21.5 | 6.4 | 3.5 | 84.2 | 0.2 | 1.5 | 4.2 |
| 6037207710 | 33.08 | 65.06 | 65-70% | 2490 | Los Angeles | 3.1 | 78.2 | 18.7 | 15.5 | 35 | 11.7 | 0.2 | 34.7 | 2.9 |
| 6037462201 | 33.06 | 65.05 | 65-70% | 3788 | Los Angeles | 9.6 | 66.1 | 24.3 | 39.6 | 31.2 | 10.6 | 0.3 | 15.8 | 2.5 |
| 6037102107 | 33.06 | 65.04 | 65-70% | 3851 | Los Angeles | 8.9 | 70.9 | 20.2 | 27 | 60 | 2.6 | 0.4 | 7.6 | 2.4 |
| 6037109603 | 33.04 | 65.03 | 65-70% | 4252 | Los Angeles | 12.9 | 76.5 | 10.6 | 64.9 | 17.9 | 4.5 | 0.3 | 10.8 | 1.6 |
| 6059074702 | 33.02 | 65.01 | 65-70% | 6316 | Orange | 17.9 | 76.9 | 5.2 | 96.5 | 2.3 | 0.2 | 0 | 0.8 | 0.1 |
| 6065043503 | 33.01 | 65.00 | 65-70% | 4112 | Riverside | 12 | 54 | 34 | 26.5 | 58.7 | 7.9 | 0.9 | 3.3 | 2.8 |
| 6107000702 | 33.01 | 64.99 | 60-65% | 5391 | Tulare | 20.5 | 72 | 7.5 | 87.6 | 10.3 | 0.2 | 0.6 | 0.7 | 0.7 |
| 6029005201 | 33.01 | 64.98 | 60-65% | 5397 | Kern | 7 | 61.6 | 31.4 | 7.4 | 86 | 0.2 | 1.8 | 0.5 | 4.1 |
| 6065043008 | 33.00 | 64.96 | 60-65% | 5394 | Riverside | 16.2 | 76.6 | 7.2 | 44.6 | 44.6 | 4.2 | 0.3 | 4 | 2.3 |
| 6001435104 | 33.00 | 64.95 | 60-65% | 5216 | Alameda | 14.8 | 79.7 | 5.5 | 35.9 | 16.8 | 19 | 0.3 | 23.5 | 4.6 |
| 6059076101 | 33.00 | 64.94 | 60-65% | 8933 | Orange | 11.8 | 82.6 | 5.6 | 46.1 | 32.7 | 2.4 | 0.2 | 15.8 | 2.8 |
| 6053010400 | 33.00 | 64.93 | 60-65% | 6481 | Monterey | 19.1 | 74.5 | 6.4 | 90.1 | 5.8 | 0.7 | 0.1 | 2.2 | 1 |
| 6107001006 | 33.00 | 64.91 | 60-65% | 5765 | Tulare | 11.6 | 73.4 | 15 | 32.1 | 60.1 | 1.9 | 0.7 | 3.5 | 1.7 |
| 6055200203 | 32.99 | 64.90 | 60-65% | 2497 | Napa | 16.1 | 76.5 | 7.4 | 57.4 | 38.9 | 0.2 | 0.5 | 1.1 | 1.9 |
| 6037600911 | 32.99 | 64.89 | 60-65% | 3349 | Los Angeles | 13.9 | 78.2 | 7.9 | 53.8 | 7.6 | 34 | 0.2 | 1.7 | 2.6 |
| 6013371000 | 32.99 | 64.88 | 60-65% | 5316 | Contra Costa | 13.2 | 76.6 | 10.2 | 42.3 | 23.7 | 14.2 | 0.2 | 15.2 | 4.4 |
| 6059088502 | 32.99 | 64.86 | 60-65% | 5249 | Orange | 13.8 | 72.7 | 13.5 | 53.6 | 15.1 | 1.1 | 0.3 | 28.4 | 1.4 |
| 6077004203 | 32.98 | 64.85 | 60-65% | 3883 | San Joaquin | 16.9 | 69.1 | 14 | 38.5 | 54.8 | 0.5 | 0.5 | 3.7 | 2.1 |
| 6037269602 | 32.98 | 64.84 | 60-65% | 3252 | Los Angeles | 15.1 | 79.6 | 5.3 | 53.5 | 24 | 15.1 | 0.1 | 4.9 | 2.3 |
| 6037103200 | 32.97 | 64.83 | 60-65% | 6150 | Los Angeles | 9.4 | 75.9 | 14.7 | 29 | 56.3 | 4.2 | 0.4 | 7.4 | 2.6 |
| 6071002036 | 32.96 | 64.81 | 60-65% | 11640 | San Bernardino | 15.8 | 78.9 | 5.3 | 33.4 | 33.4 | 14.5 | 0.3 | 14.5 | 3.8 |
| 6037212102 | 32.94 | 64.80 | 60-65% | 2446 | Los Angeles | 9 | 71.3 | 19.7 | 29.1 | 13.2 | 8.3 | 0.1 | 46.3 | 2.9 |
| 6001407102 | 32.93 | 64.79 | 60-65% | 4351 | Alameda | 15.2 | 76.5 | 8.3 | 48.2 | 8.6 | 20.9 | 0.6 | 20 | 1.7 |
| 6037201120 | 32.93 | 64.77 | 60-65% | 4097 | Los Angeles | 14.1 | 77.9 | 8 | 82.1 | 5.5 | 1.9 | 0.1 | 9.5 | 0.8 |
| 6037481300 | 32.92 | 64.76 | 60-65% | 3153 | Los Angeles | 10.5 | 75.3 | 14.2 | 31 | 5.1 | 0.2 | 0.3 | 62.8 | 0.7 |
| 6001442800 | 32.92 | 64.75 | 60-65% | 2816 | Alameda | 11.8 | 75.5 | 12.7 | 23.8 | 35.7 | 2.9 | 0.1 | 33.4 | 4.1 |
| 6071008404 | 32.91 | 64.74 | 60-65% | 2729 | San Bernardino | 15.7 | 78.5 | 5.8 | 43.6 | 39.5 | 8.8 | 0.4 | 4.7 | 3 |
| 6037320100 | 32.91 | 64.72 | 60-65% | 7144 | Los Angeles | 16.8 | 76.5 | 6.7 | 90.3 | 7.2 | 0.9 | 0.2 | 1 | 0.3 |
| 6077003111 | 32.90 | 64.71 | 60-65% | 3754 | San Joaquin | 12.1 | 72.9 | 15 | 26.4 | 34.8 | 18.8 | 0.6 | 15.1 | 4.4 |
| 6037134901 | 32.90 | 64.70 | 60-65% | 3069 | Los Angeles | 11 | 73.8 | 15.2 | 25.3 | 58.6 | 4.3 | 0.2 | 7.6 | 4 |
| 6037920312 | 32.89 | 64.69 | 60-65% | 5268 | Los Angeles | 11.7 | 73.4 | 14.9 | 28.2 | 60.9 | 2.9 | 0.2 | 4.9 | 3 |
| 6031001200 | 32.89 | 64.67 | 60-65% | 2507 | Kings | 15.8 | 71.2 | 13 | 44.8 | 52.7 | 0.6 | 0.6 | 0.4 | 0.9 |
| 6037203800 | 32.88 | 64.66 | 60-65% | 4589 | Los Angeles | 16.7 | 75 | 8.3 | 96.6 | 1.6 | 0.6 | 0.1 | 0.8 | 0.3 |
| 6037650200 | 32.87 | 64.65 | 60-65% | 5783 | Los Angeles | 10.8 | 76.1 | 13.1 | 24.8 | 41.3 | 2.8 | 0.2 | 25.5 | 5.4 |
| 6069000502 | 32.86 | 64.64 | 60-65% | 6099 | San Benito | 18.1 | 76 | 5.9 | 76.5 | 19.7 | 0.3 | 0.3 | 1.7 | 1.5 |
| 6085501200 | 32.86 | 64.62 | 60-65% | 4186 | Santa Clara | 12.8 | 78.2 | 9 | 62.6 | 20.9 | 2.2 | 0.5 | 11.2 | 2.7 |
| 6077003215 | 32.86 | 64.61 | 60-65% | 3855 | San Joaquin | 14.9 | 76.8 | 8.3 | 28.1 | 35.6 | 15.7 | 0.3 | 15.9 | 4.4 |
| 6019004503 | 32.85 | 64.60 | 60-65% | 4723 | Fresno | 9.5 | 70.2 | 20.3 | 23.6 | 63.5 | 3.4 | 0.3 | 5.9 | 3.2 |
| 6073010103 | 32.85 | 64.59 | 60-65% | 5569 | San Diego | 15 | 76 | 9 | 75.3 | 15 | 3 | 0.2 | 4.5 | 1.9 |
| 6073016502 | 32.83 | 64.57 | 60-65% | 6915 | San Diego | 14.5 | 76.2 | 9.3 | 28.7 | 57 | 5.1 | 0.4 | 3.2 | 5.5 |
| 6019005302 | 32.82 | 64.56 | 60-65% | 5208 | Fresno | 14.3 | 75.8 | 9.9 | 40.7 | 34 | 9.9 | 1 | 11.9 | 2.6 |
| 6037134304 | 32.82 | 64.55 | 60-65% | 2882 | Los Angeles | 11.7 | 68.8 | 19.5 | 28.3 | 46 | 4.1 | 0.2 | 18.6 | 2.7 |
| 6101050702 | 32.81 | 64.54 | 60-65% | 6205 | Sutter | 15.8 | 72.9 | 11.3 | 44 | 39.4 | 1.6 | 0.7 | 11.1 | 3.1 |
| 6065041301 | 32.80 | 64.52 | 60-65% | 3473 | Riverside | 17.5 | 75.9 | 6.6 | 77.7 | 16.7 | 1.9 | 0.4 | 2.5 | 0.8 |
| 6061020901 | 32.79 | 64.51 | 60-65% | 2605 | Placer | 17.5 | 73 | 9.5 | 40.9 | 51.4 | 1.7 | 1 | 1.5 | 3.5 |
| 6037117302 | 32.79 | 64.50 | 60-65% | 4914 | Los Angeles | 10.4 | 72.9 | 16.7 | 27.2 | 50 | 4.5 | 0.1 | 15.2 | 3 |
| 6029003122 | 32.79 | 64.48 | 60-65% | 8845 | Kern | 20 | 75.5 | 4.5 | 73.3 | 13.9 | 8.5 | 0.4 | 2.5 | 1.4 |
| 6075017802 | 32.78 | 64.47 | 60-65% | 4516 | San Francisco | 4.5 | 88.3 | 7.2 | 14.3 | 47.2 | 10.6 | 0.6 | 23.6 | 3.8 |
| 6065041906 | 32.77 | 64.46 | 60-65% | 6360 | Riverside | 17.6 | 73.7 | 8.7 | 66.4 | 26.8 | 3.1 | 0.3 | 2.2 | 1.2 |
| 6111004503 | 32.76 | 64.45 | 60-65% | 4387 | Ventura | 19.2 | 76.7 | 4.1 | 79.1 | 5.6 | 2 | 0.1 | 11.7 | 1.5 |
| 6029005900 | 32.75 | 64.43 | 60-65% | 3589 | Kern | 18.6 | 71.8 | 9.6 | 39.1 | 40.3 | 16.5 | 0.6 | 1.1 | 2.4 |
| 6059074408 | 32.75 | 64.42 | 60-65% | 5399 | Orange | 19.2 | 76.2 | 4.6 | 78 | 11.6 | 2.7 | 0.3 | 6.4 | 1.1 |
| 6107002203 | 32.74 | 64.41 | 60-65% | 4363 | Tulare | 21.1 | 73.6 | 5.3 | 70.9 | 21.7 | 3.1 | 0.4 | 2.5 | 1.3 |
| 6047000602 | 32.73 | 64.40 | 60-65% | 3550 | Merced | 15.1 | 72.1 | 12.8 | 48 | 41.4 | 3.4 | 0.4 | 4 | 2.8 |
| 6007002500 | 32.72 | 64.38 | 60-65% | 4930 | Butte | 17 | 75.6 | 7.4 | 14.2 | 63 | 3.3 | 2.5 | 12.9 | 4.2 |
| 6037131600 | 32.71 | 64.37 | 60-65% | 5494 | Los Angeles | 12 | 78.8 | 9.2 | 54.5 | 28.9 | 2.5 | 0.2 | 11.9 | 2.1 |
| 6037124903 | 32.71 | 64.36 | 60-65% | 3262 | Los Angeles | 7.3 | 81.2 | 11.5 | 20.5 | 64.3 | 6.3 | 0.3 | 4.6 | 4.1 |
| 6059001901 | 32.71 | 64.35 | 60-65% | 2810 | Orange | 12.8 | 77.2 | 10 | 50.4 | 33.4 | 1.3 | 0.4 | 12.4 | 2.1 |
| 6073012102 | 32.70 | 64.33 | 60-65% | 3279 | San Diego | 15.4 | 74.8 | 9.8 | 75.6 | 11.2 | 2.4 | 0.4 | 9.1 | 1.4 |
| 6095252605 | 32.69 | 64.32 | 60-65% | 5520 | Solano | 17 | 75 | 8 | 46 | 22.4 | 16 | 0.3 | 9.3 | 5.9 |
| 6065046101 | 32.69 | 64.31 | 60-65% | 3060 | Riverside | 17.1 | 72.2 | 10.7 | 50.5 | 39 | 5.7 | 0.6 | 2.9 | 1.3 |
| 6029005802 | 32.69 | 64.30 | 60-65% | 7379 | Kern | 17.1 | 74.3 | 8.6 | 40.6 | 42.2 | 9.2 | 0.9 | 3.2 | 3.9 |
| 6085503402 | 32.67 | 64.28 | 60-65% | 5263 | Santa Clara | 18.6 | 74.7 | 6.7 | 69.1 | 2.7 | 3.6 | 0.1 | 22.9 | 1.5 |
| 6065043900 | 32.64 | 64.27 | 60-65% | 6405 | Riverside | 17.8 | 73.5 | 8.7 | 51.1 | 41.1 | 2.5 | 1 | 1.8 | 2.5 |
| 6037430901 | 32.64 | 64.26 | 60-65% | 4324 | Los Angeles | 14 | 77.3 | 8.7 | 49.1 | 27.2 | 7.8 | 0.2 | 12.5 | 3.3 |

| | | | | | | | | | | | | | | |
|---|---|---|---|---|---|---|---|---|---|---|---|---|---|---|
| 6025010600 | 32.63 | 64.25 | 60-65% | 6998 | Imperial | 16.7 | 71.8 | 11.5 | 65.3 | 30 | 1.1 | 0.4 | 2.3 | 0.9 |
| 6077003213 | 32.63 | 64.23 | 60-65% | 4571 | San Joaquin | 14.2 | 72.4 | 13.4 | 27.2 | 27.9 | 17.4 | 0.4 | 23.1 | 3.9 |
| 6069000701 | 32.62 | 64.22 | 60-65% | 3644 | San Benito | 20.9 | 74.6 | 4.5 | 78.5 | 17.2 | 0.7 | 0.2 | 2.1 | 1.4 |
| 6037703100 | 32.61 | 64.21 | 60-65% | 5446 | Los Angeles | 9.1 | 69.8 | 21.1 | 6.6 | 4.9 | 82.1 | 0.1 | 1.2 | 5.2 |
| 6085503306 | 32.60 | 64.19 | 60-65% | 4311 | Santa Clara | 15.2 | 75.5 | 9.3 | 62.2 | 3.7 | 1.5 | 0.2 | 31.2 | 1.1 |
| 6037125100 | 32.60 | 64.18 | 60-65% | 5431 | Los Angeles | 9.3 | 81.9 | 8.8 | 19.4 | 64.4 | 6.8 | 0.2 | 5.7 | 3.5 |
| 6095251000 | 32.59 | 64.17 | 60-65% | 2470 | Solano | 12.8 | 79.8 | 7.4 | 27 | 39.5 | 21.9 | 0.6 | 5.9 | 5 |
| 6065042407 | 32.59 | 64.16 | 60-65% | 3262 | Riverside | 14.9 | 78.1 | 7 | 50.7 | 31.3 | 10.8 | 0.9 | 3.5 | 2.9 |
| 6065045900 | 32.58 | 64.14 | 60-65% | 1838 | Riverside | 17 | 72.9 | 10.1 | 57.7 | 32.4 | 7.6 | 0.9 | 0.5 | 0.9 |
| 6059087601 | 32.57 | 64.13 | 60-65% | 4808 | Orange | 14.2 | 75.4 | 10.4 | 52.4 | 25.8 | 3 | 0.1 | 16.9 | 1.9 |
| 6037604002 | 32.57 | 64.12 | 60-65% | 5078 | Los Angeles | 14.8 | 79.9 | 5.3 | 58.4 | 21.3 | 7.5 | 0.2 | 9.5 | 3.1 |
| 6071010700 | 32.57 | 64.11 | 60-65% | 3798 | San Bernardino | 16.3 | 70.2 | 13.5 | 22.4 | 68.9 | 2.1 | 2.7 | 0.9 | 3.1 |
| 6099000912 | 32.56 | 64.09 | 60-65% | 17129 | Stanislaus | 15.9 | 76.3 | 7.8 | 26 | 49.8 | 3.9 | 0.4 | 15.4 | 4.4 |
| 6099002603 | 32.56 | 64.08 | 60-65% | 2906 | Stanislaus | 13.7 | 70.8 | 15.5 | 36.5 | 55.8 | 1.4 | 1.4 | 2.3 | 2.6 |
| 6037113233 | 32.55 | 64.07 | 60-65% | 6655 | Los Angeles | 15.1 | 75.9 | 9 | 54.4 | 24.2 | 6.9 | 0.2 | 12 | 2.4 |
| 6065041403 | 32.55 | 64.06 | 60-65% | 2763 | Riverside | 11.6 | 74.1 | 14.3 | 48.1 | 41.6 | 4.7 | 0.2 | 3.9 | 1.5 |
| 6037460900 | 32.53 | 64.04 | 60-65% | 6998 | Los Angeles | 13.7 | 77 | 9.3 | 55.9 | 8.6 | 27.6 | 0.1 | 5.2 | 2.6 |
| 6037106405 | 32.53 | 64.03 | 60-65% | 3966 | Los Angeles | 16.3 | 78.3 | 5.4 | 79.8 | 10.1 | 5.9 | 0.3 | 3.3 | 0.7 |
| 6059088903 | 32.52 | 64.02 | 60-65% | 8585 | Orange | 13.2 | 75.8 | 11 | 27 | 8.7 | 0.3 | 0.2 | 62.5 | 1.4 |
| 6037551501 | 32.52 | 64.01 | 60-65% | 4869 | Los Angeles | 13 | 77.3 | 9.7 | 65.6 | 21.2 | 4.6 | 0.1 | 7.2 | 1.2 |
| 6037603006 | 32.50 | 63.99 | 60-65% | 2035 | Los Angeles | 10.5 | 68.5 | 21 | 30.7 | 9.5 | 10.3 | 0.1 | 46.5 | 2.9 |
| 6037480901 | 32.50 | 63.98 | 60-65% | 4686 | Los Angeles | 11 | 80.1 | 8.9 | 36.1 | 3.9 | 1.5 | 0.1 | 56.7 | 1.7 |
| 6067003202 | 32.49 | 63.97 | 60-65% | 5052 | Sacramento | 14.9 | 72.6 | 12.5 | 38.6 | 23.7 | 5.5 | 0.5 | 29.3 | 2.4 |
| 6037543703 | 32.49 | 63.96 | 60-65% | 3472 | Los Angeles | 11.5 | 76.6 | 11.9 | 57.7 | 10.1 | 5 | 0.1 | 24.6 | 2.5 |
| 6065046900 | 32.49 | 63.94 | 60-65% | 2043 | Riverside | 14.7 | 70.9 | 14.4 | 52.3 | 42.7 | 1.7 | 0.6 | 0.7 | 2.1 |
| 6029004902 | 32.49 | 63.93 | 60-65% | 8349 | Kern | 16.5 | 75 | 8.5 | 68.7 | 4.1 | 0.5 | 0.3 | 25.2 | 1.2 |
| 6065043822 | 32.48 | 63.92 | 60-65% | 2689 | Riverside | 16.2 | 75.5 | 8.3 | 37 | 52.8 | 2.9 | 0.5 | 4.8 | 2 |
| 6059074103 | 32.47 | 63.90 | 60-65% | 5026 | Orange | 16.2 | 77.8 | 6 | 91.8 | 4.2 | 0.4 | 0.4 | 2.8 | 0.4 |
| 6077005406 | 32.46 | 63.89 | 60-65% | 3262 | San Joaquin | 18.6 | 74.4 | 7 | 55.5 | 22.8 | 7.2 | 0.5 | 9.5 | 4.4 |
| 6001409600 | 32.46 | 63.88 | 60-65% | 5063 | Alameda | 18.3 | 75.2 | 6.5 | 58.8 | 1.9 | 33.2 | 0.1 | 4 | 2 |
| 6107001301 | 32.45 | 63.87 | 60-65% | 8013 | Tulare | 15.8 | 75.9 | 8.3 | 48.9 | 41.9 | 1.6 | 0.8 | 4.8 | 2 |
| 6065043307 | 32.45 | 63.85 | 60-65% | 5872 | Riverside | 13.1 | 61.1 | 25.8 | 33.4 | 55 | 5.3 | 0.7 | 2.9 | 2.6 |
| 6103000700 | 32.44 | 63.84 | 60-65% | 7828 | Tehama | 17.8 | 68.3 | 13.9 | 24.5 | 67.8 | 0.7 | 2 | 1.7 | 3.3 |
| 6081610302 | 32.43 | 63.83 | 60-65% | 2108 | San Mateo | 10.1 | 80 | 9.9 | 40.3 | 43.5 | 2.7 | 0.5 | 9.7 | 3.3 |
| 6071002607 | 32.43 | 63.82 | 60-65% | 7826 | San Bernardino | 16.2 | 79.3 | 4.5 | 64.5 | 9.1 | 14.6 | 0.3 | 9.6 | 1.9 |
| 6067009319 | 32.41 | 63.80 | 60-65% | 4864 | Sacramento | 15.8 | 76.3 | 7.9 | 22.7 | 16.6 | 12.6 | 0.3 | 42.7 | 5 |
| 6075026404 | 32.41 | 63.79 | 60-65% | 2851 | San Francisco | 12.7 | 77.3 | 10 | 29.1 | 1.9 | 18.1 | 0 | 47 | 3.8 |
| 6059074407 | 32.39 | 63.78 | 60-65% | 6700 | Orange | 22.6 | 73.5 | 3.9 | 87.5 | 6.8 | 1.3 | 0.1 | 3.5 | 0.7 |
| 6065040609 | 32.38 | 63.77 | 60-65% | 8422 | Riverside | 20.1 | 75.4 | 4.5 | 37.5 | 21.1 | 7.3 | 0.2 | 30.7 | 3.1 |
| 6037293306 | 32.37 | 63.75 | 60-65% | 2189 | Los Angeles | 13.1 | 73.4 | 13.5 | 37.7 | 45 | 5 | 0.5 | 9.1 | 2.7 |
| 6037211802 | 32.37 | 63.74 | 60-65% | 4192 | Los Angeles | 9.8 | 82.3 | 7.9 | 35.6 | 9.9 | 6.5 | 0.1 | 45.4 | 2.4 |
| 6065043308 | 32.35 | 63.73 | 60-65% | 2770 | Riverside | 18.3 | 73.7 | 8 | 47.2 | 39.2 | 8.6 | 1.2 | 1.4 | 2.3 |
| 6099003909 | 32.35 | 63.72 | 60-65% | 5980 | Stanislaus | 11.8 | 74.8 | 13.4 | 28.3 | 62.8 | 1.5 | 0.6 | 3.2 | 3.7 |
| 6037269905 | 32.33 | 63.70 | 60-65% | 2423 | Los Angeles | 6.6 | 88.8 | 4.6 | 31 | 32.1 | 11.3 | 0.6 | 20.3 | 4.6 |
| 6053000800 | 32.33 | 63.69 | 60-65% | 5628 | Monterey | 20.2 | 74.8 | 5 | 95 | 3.8 | 0.2 | 0 | 0.8 | 0.3 |
| 6067009004 | 32.32 | 63.68 | 60-65% | 3878 | Sacramento | 15.2 | 75.3 | 9.5 | 19.9 | 50.7 | 13.9 | 0.5 | 8.8 | 6.2 |
| 6075017700 | 32.31 | 63.67 | 60-65% | 2128 | San Francisco | 6.5 | 87.5 | 6 | 34 | 42.7 | 4.7 | 0.4 | 14.5 | 3.7 |
| 6085501402 | 32.31 | 63.65 | 60-65% | 2947 | Santa Clara | 14.2 | 77.7 | 8.1 | 68.8 | 17.3 | 1.6 | 0.1 | 11 | 1.1 |
| 6065042723 | 32.30 | 63.64 | 60-65% | 5506 | Riverside | 14.4 | 67 | 18.6 | 47.5 | 47.4 | 1.7 | 0.7 | 1.1 | 1.6 |
| 6093000900 | 32.30 | 63.63 | 60-65% | 7231 | Siskiyou | 11.6 | 70.8 | 17.6 | 11.1 | 76.5 | 3.7 | 1.7 | 3.2 | 3.8 |
| 6037199110 | 32.29 | 63.61 | 60-65% | 2710 | Los Angeles | 14.8 | 75.2 | 10 | 88 | 4.3 | 1.1 | 0.2 | 5.6 | 0.8 |
| 6059087602 | 32.29 | 63.60 | 60-65% | 7722 | Orange | 15 | 73.9 | 11.1 | 50.1 | 26.5 | 1.6 | 0.2 | 20.1 | 1.4 |
| 6037195300 | 32.27 | 63.59 | 60-65% | 3203 | Los Angeles | 6.7 | 83.1 | 10.2 | 30.4 | 51.1 | 1.7 | 0.2 | 13.8 | 2.8 |
| 6001436800 | 32.26 | 63.58 | 60-65% | 4027 | Alameda | 16.2 | 74.4 | 9.4 | 45 | 15.9 | 13.6 | 0.4 | 21.3 | 3.8 |
| 6037408134 | 32.24 | 63.56 | 60-65% | 2743 | Los Angeles | 8 | 77.9 | 14.1 | 30.7 | 9 | 7.5 | 0 | 50.4 | 2.4 |
| 6111003900 | 32.22 | 63.55 | 60-65% | 7533 | Ventura | 19.6 | 74.8 | 5.6 | 88.8 | 5.5 | 0.8 | 0.3 | 4 | 0.7 |
| 6077003205 | 32.22 | 63.54 | 60-65% | 3537 | San Joaquin | 11.1 | 72.8 | 16.1 | 25.9 | 54.2 | 5.3 | 0.6 | 9.8 | 4.2 |
| 6037311500 | 32.22 | 63.53 | 60-65% | 5633 | Los Angeles | 10.8 | 77.7 | 11.5 | 23.3 | 61 | 2.3 | 0.2 | 10.2 | 3 |
| 6037401901 | 32.21 | 63.51 | 60-65% | 4610 | Los Angeles | 0.9 | 98.8 | 0.3 | 11.8 | 63.8 | 3.6 | 0.1 | 13.8 | 6.8 |
| 6075020100 | 32.21 | 63.50 | 60-65% | 6172 | San Francisco | 5.6 | 83.9 | 10.5 | 43 | 31.4 | 5.7 | 1.4 | 15.2 | 3.3 |
| 6037431400 | 32.21 | 63.49 | 60-65% | 3970 | Los Angeles | 12.8 | 72.3 | 14.9 | 25.6 | 31.8 | 1.4 | 0.3 | 38.3 | 2.7 |
| 6071003404 | 32.21 | 63.48 | 60-65% | 4946 | San Bernardino | 20.5 | 74.8 | 4.7 | 74.6 | 11.2 | 11.3 | 0.3 | 1.4 | 1.1 |
| 6001432502 | 32.21 | 63.46 | 60-65% | 4485 | Alameda | 12.6 | 77.7 | 9.7 | 32.2 | 14 | 11.8 | 0.4 | 38.6 | 3 |
| 6065030700 | 32.20 | 63.45 | 60-65% | 5598 | Riverside | 14.1 | 76.7 | 9.2 | 34.2 | 54.6 | 5.9 | 0.6 | 1.6 | 3.1 |
| 6037191902 | 32.19 | 63.44 | 60-65% | 2867 | Los Angeles | 9.4 | 79.9 | 10.7 | 13.6 | 70.4 | 3.2 | 0.1 | 9.8 | 2.9 |
| 6037269907 | 32.18 | 63.43 | 60-65% | 2761 | Los Angeles | 8 | 87.1 | 4.9 | 23.9 | 37.4 | 12.1 | 0.2 | 21.5 | 4.9 |

| | | | | | | | | | | | | | | | |
|---|---|---|---|---|---|---|---|---|---|---|---|---|---|---|---|
| 6031000404 | 32.17 | 63.41 | 60-65% | 9791 | Kings | 17.5 | 76.3 | 6.2 | 36.6 | 43.9 | 5.3 | 0.7 | 9.6 | 3.9 |
| 6037183300 | 32.16 | 63.40 | 60-65% | 3480 | Los Angeles | 13.7 | 76.4 | 9.9 | 72 | 8.7 | 0.5 | 0.2 | 17.4 | 1.3 |
| 6037550500 | 32.16 | 63.39 | 60-65% | 7809 | Los Angeles | 12.4 | 74 | 13.6 | 68.1 | 19.5 | 1.9 | 0.1 | 9.3 | 1 |
| 6037405702 | 32.16 | 63.37 | 60-65% | 4854 | Los Angeles | 13.9 | 76.6 | 9.5 | 61.8 | 18.8 | 3.5 | 0.3 | 14.1 | 1.5 |
| 6099002901 | 32.16 | 63.36 | 60-65% | 4764 | Stanislaus | 13.1 | 73.2 | 13.7 | 27.9 | 68.2 | 0.3 | 0.9 | 1.2 | 1.4 |
| 6059011102 | 32.16 | 63.35 | 60-65% | 4356 | Orange | 12.8 | 77.5 | 9.7 | 52.6 | 29.2 | 2.1 | 0.4 | 14 | 1.8 |
| 6037702400 | 32.14 | 63.34 | 60-65% | 4541 | Los Angeles | 10.6 | 78.5 | 10.9 | 32.1 | 46.4 | 4.8 | 0.2 | 11.2 | 5.3 |
| 6099003906 | 32.13 | 63.32 | 60-65% | 4880 | Stanislaus | 17.9 | 71.5 | 10.6 | 42 | 47.9 | 3.3 | 0.6 | 3.1 | 3.1 |
| 6037297601 | 32.13 | 63.31 | 60-65% | 2594 | Los Angeles | 15.8 | 76.3 | 7.9 | 26.9 | 50.1 | 11.1 | 0.5 | 5.8 | 5.4 |
| 6055200202 | 32.13 | 63.30 | 60-65% | 2856 | Napa | 9.9 | 81.2 | 8.9 | 36.3 | 57.4 | 1.4 | 0.8 | 1.7 | 2.4 |
| 6071004509 | 32.13 | 63.29 | 60-65% | 4764 | San Bernardino | 14.7 | 76.4 | 8.9 | 43.1 | 38.9 | 11 | 0.3 | 3.9 | 2.7 |
| 6073005800 | 32.12 | 63.27 | 60-65% | 2725 | San Diego | 4 | 91.3 | 4.7 | 17.3 | 70.6 | 3.2 | 0.2 | 6.1 | 2.6 |
| 6077005134 | 32.11 | 63.26 | 60-65% | 4743 | San Joaquin | 12.5 | 77.9 | 9.6 | 32 | 56.5 | 3.3 | 0.7 | 4 | 3.5 |
| 6001437000 | 32.09 | 63.25 | 60-65% | 3473 | Alameda | 12.3 | 75.6 | 12.1 | 31.6 | 23.6 | 9.1 | 1 | 29.7 | 5 |
| 6071002038 | 32.08 | 63.24 | 60-65% | 5366 | San Bernardino | 11.6 | 82.6 | 5.8 | 38.8 | 21.3 | 20.9 | 0.3 | 15.5 | 3.2 |
| 6071010010 | 32.08 | 63.22 | 60-65% | 6446 | San Bernardino | 17.1 | 74.3 | 8.6 | 58.4 | 31 | 6.6 | 0.5 | 1.7 | 1.8 |
| 6031000405 | 32.07 | 63.21 | 60-65% | 6281 | Kings | 17.7 | 75.4 | 6.9 | 49.8 | 33.4 | 6 | 1.4 | 5.7 | 3.7 |
| 6099000505 | 32.06 | 63.20 | 60-65% | 4895 | Stanislaus | 15.8 | 75.1 | 9.1 | 30.3 | 47.9 | 4.2 | 0.8 | 12.5 | 4.3 |
| 6065045209 | 32.06 | 63.19 | 60-65% | 5441 | Riverside | 17.7 | 73.7 | 8.6 | 86.2 | 10.7 | 1.5 | 0.2 | 0.6 | 0.8 |
| 6065040702 | 32.06 | 63.17 | 60-65% | 2746 | Riverside | 10.8 | 77.5 | 11.7 | 30.7 | 65 | 0.9 | 0.5 | 1.5 | 1.4 |
| 6071009908 | 32.05 | 63.16 | 60-65% | 4817 | San Bernardino | 15.3 | 75.1 | 9.6 | 43.9 | 35.4 | 13.2 | 0.4 | 4.1 | 3 |
| 6107002009 | 32.05 | 63.15 | 60-65% | 4376 | Tulare | 13.6 | 71.3 | 15.1 | 37.8 | 54.4 | 1.9 | 0.8 | 2.7 | 2.3 |
| 6037119800 | 32.05 | 63.14 | 60-65% | 6108 | Los Angeles | 13.2 | 78.2 | 8.6 | 78.2 | 8.9 | 1 | 0.1 | 11.1 | 0.7 |
| 6037183103 | 32.03 | 63.12 | 60-65% | 3967 | Los Angeles | 13.8 | 79 | 7.2 | 73 | 11.4 | 2.8 | 0.5 | 10.3 | 1.9 |
| 6097153003 | 32.03 | 63.11 | 60-65% | 5502 | Sonoma | 15.3 | 77 | 7.7 | 42.1 | 47.5 | 2.3 | 1.1 | 4 | 2.9 |
| 6037124902 | 32.02 | 63.10 | 60-65% | 2766 | Los Angeles | 9.5 | 73 | 17.5 | 24.5 | 57.8 | 6.5 | 0.3 | 7.4 | 3.4 |
| 6053010606 | 32.02 | 63.08 | 60-65% | 6299 | Monterey | 17.4 | 76.2 | 6.4 | 74.8 | 16.2 | 0.7 | 0.2 | 7.3 | 0.8 |
| 6037400302 | 32.01 | 63.07 | 60-65% | 3016 | Los Angeles | 9.5 | 73.5 | 17 | 37.9 | 49.8 | 2.8 | 0.4 | 7.5 | 1.7 |
| 6001433900 | 32.01 | 63.06 | 60-65% | 6599 | Alameda | 20.1 | 75.1 | 4.8 | 47.4 | 9.9 | 26.8 | 0.3 | 12.6 | 3.1 |
| 6085503510 | 32.01 | 63.05 | 60-65% | 5968 | Santa Clara | 18.1 | 74.9 | 7 | 77.2 | 7.6 | 1.2 | 0.3 | 12.7 | 1 |
| 6065045302 | 32.00 | 63.03 | 60-65% | 4459 | Riverside | 17.6 | 72.5 | 9.9 | 90.8 | 7.1 | 0.9 | 0.1 | 0.5 | 0.6 |
| 6037432102 | 31.99 | 63.02 | 60-65% | 5633 | Los Angeles | 10.4 | 75 | 14.6 | 20.1 | 22 | 0.4 | 0.1 | 55.5 | 2 |
| 6037482001 | 31.97 | 63.01 | 60-65% | 2761 | Los Angeles | 8.4 | 59.7 | 31.9 | 11.8 | 7.8 | 0.2 | 0.1 | 77.8 | 2.4 |
| 6037650003 | 31.93 | 63.00 | 60-65% | 3158 | Los Angeles | 11.3 | 78.9 | 9.8 | 27.8 | 27 | 7.5 | 0.1 | 33 | 4.6 |
| 6083000900 | 31.91 | 62.98 | 60-65% | 3266 | Santa Barbara | 8.8 | 74.1 | 17.1 | 45.1 | 47.7 | 2.4 | 0.6 | 2.4 | 1.8 |
| 6059087701 | 31.90 | 62.97 | 60-65% | 5323 | Orange | 13.5 | 72.6 | 13.9 | 38.2 | 29.2 | 3.4 | 0.4 | 26 | 2.8 |
| 6001433700 | 31.90 | 62.96 | 60-65% | 3182 | Alameda | 14.1 | 78.6 | 7.3 | 45.6 | 22.6 | 11.3 | 0.8 | 15.3 | 4.5 |
| 6059087001 | 31.88 | 62.95 | 60-65% | 5537 | Orange | 15.7 | 75.7 | 8.6 | 49.5 | 25.8 | 5 | 0.2 | 17.2 | 2.3 |
| 6071002027 | 31.88 | 62.93 | 60-65% | 5543 | San Bernardino | 11.7 | 75.7 | 12.6 | 37.8 | 48.4 | 5.4 | 0.3 | 5.7 | 2.5 |
| 6069000100 | 31.88 | 62.92 | 60-65% | 5007 | San Benito | 12.6 | 75.7 | 11.7 | 48.6 | 47.7 | 0.3 | 0.5 | 1.5 | 1.4 |
| 6065040903 | 31.88 | 62.91 | 60-65% | 2626 | Riverside | 13 | 74.9 | 12.1 | 57.3 | 30.3 | 4.4 | 0.2 | 5.4 | 2.4 |
| 6059011000 | 31.88 | 62.90 | 60-65% | 6626 | Orange | 12.1 | 76.1 | 11.8 | 32.3 | 50.9 | 1.9 | 0.2 | 11.7 | 3 |
| 6037408504 | 31.88 | 62.88 | 60-65% | 5322 | Los Angeles | 12.1 | 77.4 | 10.5 | 54.2 | 12 | 0.8 | 0.1 | 31.6 | 1.2 |
| 6019001409 | 31.87 | 62.87 | 60-65% | 1848 | Fresno | 13.4 | 70.5 | 16.1 | 36.5 | 39.7 | 7.4 | 0.3 | 12.8 | 3.4 |
| 6067007011 | 31.87 | 62.86 | 60-65% | 5788 | Sacramento | 14 | 82 | 4 | 35.5 | 27 | 20 | 0.7 | 11 | 5.9 |
| 6073014300 | 31.85 | 62.85 | 60-65% | 3618 | San Diego | 14.6 | 75.6 | 9.8 | 44.6 | 33.8 | 11.4 | 0.5 | 5.9 | 3.8 |
| 6019007902 | 31.84 | 62.83 | 60-65% | 2742 | Fresno | 17.4 | 76.3 | 6.3 | 70.2 | 23.9 | 0.8 | 0.4 | 3.4 | 1.2 |
| 6065048300 | 31.83 | 62.82 | 60-65% | 6649 | Riverside | 16.5 | 78.2 | 5.3 | 49.5 | 12.5 | 25.6 | 0.2 | 9.2 | 3 |
| 6107002903 | 31.82 | 62.81 | 60-65% | 5097 | Tulare | 16.3 | 73.8 | 9.9 | 49.2 | 45.3 | 1.9 | 0.5 | 1.1 | 2.1 |
| 6075018000 | 31.82 | 62.79 | 60-65% | 4221 | San Francisco | 3.3 | 94.1 | 2.6 | 14.3 | 43.2 | 20.2 | 0.7 | 17.2 | 4.4 |
| 6067007406 | 31.82 | 62.78 | 60-65% | 7626 | Sacramento | 15.5 | 71.4 | 13.1 | 26.4 | 51.4 | 10.4 | 0.6 | 6.7 | 4.6 |
| 6029006404 | 31.82 | 62.77 | 60-65% | 3564 | Kern | 20.3 | 74.4 | 5.3 | 92.2 | 7 | 0 | 0.1 | 0.4 | 0.3 |
| 6065045207 | 31.81 | 62.76 | 60-65% | 5014 | Riverside | 19.9 | 71.7 | 8.4 | 80.6 | 14.8 | 2.5 | 0.1 | 1.3 | 0.7 |
| 6037461502 | 31.80 | 62.74 | 60-65% | 6563 | Los Angeles | 13.2 | 71.8 | 15 | 57.7 | 17 | 19.7 | 0.1 | 3.8 | 1.7 |
| 6081610400 | 31.80 | 62.73 | 60-65% | 5623 | San Mateo | 16.3 | 76.9 | 6.8 | 69.7 | 20.6 | 1.8 | 0.2 | 5.5 | 2.3 |
| 6067008907 | 31.79 | 62.72 | 60-65% | 4835 | Sacramento | 15.5 | 71.6 | 12.9 | 23.2 | 55.1 | 10.3 | 0.7 | 5.7 | 4.9 |
| 6037267403 | 31.79 | 62.71 | 60-65% | 3011 | Los Angeles | 3.9 | 86.5 | 9.6 | 13.3 | 62.5 | 1.8 | 0.2 | 17.4 | 4.9 |
| 6037212620 | 31.79 | 62.69 | 60-65% | 4341 | Los Angeles | 11.9 | 78.6 | 9.5 | 42.5 | 5.7 | 4.1 | 0.1 | 46.3 | 1.2 |
| 6111003100 | 31.78 | 62.68 | 60-65% | 14589 | Ventura | 15.9 | 77.5 | 6.6 | 70.6 | 11.7 | 1.8 | 0.2 | 13.9 | 1.8 |
| 6037543602 | 31.78 | 62.67 | 60-65% | 7762 | Los Angeles | 11.4 | 73.1 | 15.5 | 31.9 | 20.8 | 8 | 0.5 | 35.6 | 3.2 |
| 6065031702 | 31.77 | 62.66 | 60-65% | 2387 | Riverside | 12 | 76.4 | 11.6 | 43.1 | 47.3 | 1.9 | 0.5 | 4.8 | 2.5 |
| 6037275200 | 31.76 | 62.64 | 60-65% | 3887 | Los Angeles | 11.4 | 80.6 | 8 | 49.4 | 30.9 | 5 | 0.2 | 11.4 | 3 |
| 6037431501 | 31.75 | 62.63 | 60-65% | 4107 | Los Angeles | 8.8 | 71.1 | 20.1 | 31.5 | 27.4 | 1.4 | 0.1 | 37.8 | 1.8 |
| 6075012401 | 31.75 | 62.62 | 60-65% | 5075 | San Francisco | 7.5 | 82.4 | 10.1 | 36.5 | 24.5 | 9.8 | 0.5 | 25.4 | 3.4 |
| 6037109300 | 31.75 | 62.61 | 60-65% | 3085 | Los Angeles | 11 | 76 | 13 | 43.8 | 32.7 | 4.1 | 0.2 | 16.6 | 2.6 |
| 6107001703 | 31.73 | 62.59 | 60-65% | 7149 | Tulare | 14.7 | 74.3 | 11 | 35.5 | 57.9 | 1.2 | 0.5 | 2.9 | 2 |

| | | | | | | | | | | | | | | | |
|---|---|---|---|---|---|---|---|---|---|---|---|---|---|---|---|
| 6065044101 | 31.73 | 62.58 | 60-65% | 2973 | Riverside | 18.1 | 74.8 | 7.1 | 63.8 | 24.9 | 3.1 | 2 | 3.8 | 2.4 |
| 6037401703 | 31.73 | 62.57 | 60-65% | 4176 | Los Angeles | 13.8 | 78.6 | 7.6 | 39 | 31.3 | 11.5 | 0.3 | 14.2 | 3.7 |
| 6059099222 | 31.72 | 62.56 | 60-65% | 4733 | Orange | 11 | 71.3 | 17.7 | 13 | 26.3 | 0.3 | 0.2 | 57.4 | 2.9 |
| 6059087503 | 31.72 | 62.54 | 60-65% | 6808 | Orange | 18 | 75.6 | 6.4 | 66.8 | 19.7 | 2 | 0.2 | 10 | 1.3 |
| 6111001302 | 31.72 | 62.53 | 60-65% | 1778 | Ventura | 11.3 | 58.8 | 29.9 | 57.5 | 37.3 | 1.6 | 0.6 | 1.9 | 1.1 |
| 6037650902 | 31.71 | 62.52 | 60-65% | 7103 | Los Angeles | 12.1 | 78.6 | 9.3 | 28.8 | 30.5 | 2.4 | 0.3 | 34.6 | 3.5 |
| 6065043003 | 31.71 | 62.50 | 60-65% | 6600 | Riverside | 21.4 | 73.7 | 4.9 | 65.7 | 26.4 | 3.4 | 0.3 | 1.9 | 2.3 |
| 6065048700 | 31.69 | 62.49 | 60-65% | 4489 | Riverside | 17.2 | 76.5 | 6.3 | 40.7 | 17.3 | 27.1 | 0.7 | 10.4 | 3.9 |
| 6013359103 | 31.68 | 62.48 | 60-65% | 5051 | Contra Costa | 10.5 | 76.4 | 13.1 | 18.6 | 35.4 | 16.6 | 0.3 | 24.2 | 4.9 |
| 6077005207 | 31.66 | 62.47 | 60-65% | 13899 | San Joaquin | 18.4 | 75.5 | 6.1 | 27.3 | 28.2 | 7.6 | 0.2 | 30.2 | 6.4 |
| 6037551502 | 31.66 | 62.45 | 60-65% | 4250 | Los Angeles | 13.7 | 75.1 | 11.2 | 69.1 | 18.9 | 3.2 | 0.1 | 7.4 | 1.3 |
| 6085503218 | 31.64 | 62.44 | 60-65% | 4471 | Santa Clara | 20 | 74.6 | 5.4 | 77.2 | 4.7 | 2 | 0.3 | 15 | 0.8 |
| 6065042720 | 31.62 | 62.43 | 60-65% | 4434 | Riverside | 15.3 | 72.6 | 12.1 | 48.6 | 45.9 | 1.5 | 0.6 | 1.4 | 2 |
| 6111008600 | 31.62 | 62.42 | 60-65% | 7982 | Ventura | 18.8 | 73.9 | 7.3 | 82 | 9.9 | 2.9 | 0.3 | 3.8 | 1.1 |
| 6095252604 | 31.61 | 62.40 | 60-65% | 3674 | Solano | 15 | 72.6 | 12.4 | 36.8 | 25.4 | 20.9 | 0.5 | 9.6 | 6.8 |
| 6037543503 | 31.61 | 62.39 | 60-65% | 5687 | Los Angeles | 9 | 71 | 20 | 29.6 | 18.9 | 7.8 | 0.2 | 40.8 | 2.8 |
| 6071011600 | 31.61 | 62.38 | 60-65% | 7444 | San Bernardino | 12.2 | 67.2 | 20.6 | 19.3 | 69.7 | 4.8 | 0.7 | 3.3 | 2.3 |
| 6085500800 | 31.60 | 62.37 | 60-65% | 2600 | Santa Clara | 8.8 | 77.5 | 13.7 | 41.6 | 30.1 | 5.3 | 0.2 | 19.4 | 3.3 |
| 6065042728 | 31.59 | 62.35 | 60-65% | 2266 | Riverside | 14.5 | 69.4 | 16.1 | 37.6 | 48.5 | 5.3 | 0.7 | 5.7 | 2.3 |
| 6037204110 | 31.59 | 62.34 | 60-65% | 3078 | Los Angeles | 15.6 | 72.5 | 11.9 | 97.4 | 0.6 | 0.4 | 0.1 | 1.3 | 0.2 |
| 6059099248 | 31.57 | 62.33 | 60-65% | 5290 | Orange | 17 | 71.3 | 11.7 | 63.1 | 6.9 | 0.4 | 0.3 | 28.6 | 0.7 |
| 6085503305 | 31.56 | 62.32 | 60-65% | 6069 | Santa Clara | 13.2 | 74.8 | 12 | 48.4 | 3.3 | 1.7 | 0.2 | 44.8 | 1.6 |
| 6071007106 | 31.54 | 62.30 | 60-65% | 3943 | San Bernardino | 13 | 76.3 | 10.7 | 41 | 45.4 | 5.4 | 0.2 | 5.6 | 2.5 |
| 6011000200 | 31.52 | 62.29 | 60-65% | 5121 | Colusa | 17 | 69.6 | 13.4 | 46.9 | 46.7 | 0.8 | 1.9 | 2 | 1.8 |
| 6059087101 | 31.52 | 62.28 | 60-65% | 4635 | Orange | 13.8 | 77.7 | 8.5 | 37.9 | 22.7 | 3.9 | 0.2 | 32.6 | 2.6 |
| 6037703001 | 31.51 | 62.27 | 60-65% | 5889 | Los Angeles | 9.4 | 79 | 11.6 | 12 | 38.4 | 28.1 | 0.3 | 15.6 | 5.6 |
| 6037208710 | 31.51 | 62.25 | 60-65% | 4309 | Los Angeles | 10.9 | 80.7 | 8.4 | 32.4 | 5.2 | 5.5 | 0 | 55.3 | 1.6 |
| 6065042623 | 31.50 | 62.24 | 60-65% | 3682 | Riverside | 13.8 | 73 | 13.2 | 29.9 | 32.5 | 22.7 | 0.2 | 11 | 3.7 |
| 6073005600 | 31.50 | 62.23 | 60-65% | 4463 | San Diego | 3.5 | 82.6 | 13.9 | 15.3 | 65.4 | 6.3 | 0.3 | 9.5 | 3.2 |
| 6037267700 | 31.50 | 62.21 | 60-65% | 2990 | Los Angeles | 6.6 | 82.5 | 10.9 | 18.7 | 40.8 | 2.3 | 0 | 33.5 | 4.6 |
| 6059086902 | 31.50 | 62.20 | 60-65% | 5614 | Orange | 11.4 | 69.3 | 19.3 | 33.1 | 34.5 | 3.8 | 0.1 | 25.9 | 2.5 |
| 6001432300 | 31.50 | 62.19 | 60-65% | 4656 | Alameda | 15.7 | 75.2 | 9.1 | 35.5 | 21.6 | 10.6 | 0.5 | 28.5 | 3.2 |
| 6037650300 | 31.49 | 62.18 | 60-65% | 6704 | Los Angeles | 10.4 | 74.7 | 14.9 | 24.9 | 34.5 | 3.8 | 0.4 | 31.6 | 4.8 |
| 6037480303 | 31.49 | 62.16 | 60-65% | 3858 | Los Angeles | 11.5 | 80.2 | 8.3 | 37.6 | 7.7 | 1.9 | 0.2 | 50.6 | 2 |
| 6097153102 | 31.47 | 62.15 | 60-65% | 5742 | Sonoma | 18 | 75.5 | 6.5 | 66.4 | 23.2 | 1.8 | 2 | 4.7 | 1.9 |
| 6037481712 | 31.47 | 62.14 | 60-65% | 5225 | Los Angeles | 8.6 | 75 | 16.4 | 16.9 | 1.6 | 0.2 | 0.1 | 80.3 | 0.9 |
| 6077005124 | 31.46 | 62.13 | 60-65% | 3438 | San Joaquin | 14.6 | 74.6 | 10.8 | 38.2 | 48.6 | 4.4 | 0.5 | 5 | 3.4 |
| 6037192001 | 31.45 | 62.11 | 60-65% | 2466 | Los Angeles | 8.2 | 74.6 | 17.2 | 11.9 | 74.1 | 5.2 | 0.2 | 6 | 2.6 |
| 6037404503 | 31.45 | 62.10 | 60-65% | 2977 | Los Angeles | 14.6 | 76.4 | 9 | 74.1 | 8.9 | 2 | 0.2 | 13.7 | 1.1 |
| 6053010506 | 31.45 | 62.09 | 60-65% | 4752 | Monterey | 21.8 | 72.8 | 5.4 | 79.8 | 13.2 | 2 | 0.2 | 3.6 | 1.3 |
| 6085503123 | 31.45 | 62.08 | 60-65% | 3585 | Santa Clara | 15.4 | 75.5 | 9.1 | 46.4 | 26.8 | 11.4 | 0.7 | 11.9 | 2.9 |
| 6013308001 | 31.43 | 62.06 | 60-65% | 7229 | Contra Costa | 12.5 | 75.7 | 11.8 | 30.1 | 49.1 | 11.3 | 0.4 | 5.5 | 3.6 |
| 6073012101 | 31.43 | 62.05 | 60-65% | 2235 | San Diego | 15.4 | 70.7 | 13.9 | 77.1 | 13.2 | 1.6 | 0.4 | 6.7 | 0.9 |
| 6081606200 | 31.42 | 62.04 | 60-65% | 8107 | San Mateo | 14.4 | 78.5 | 7.1 | 62.3 | 11.7 | 6.4 | 0.2 | 16.8 | 2.5 |
| 6059089102 | 31.41 | 62.03 | 60-65% | 7217 | Orange | 14.8 | 76.1 | 9.1 | 64.9 | 11.6 | 1.2 | 0.2 | 20.9 | 1.3 |
| 6037211803 | 31.41 | 62.01 | 60-65% | 3529 | Los Angeles | 10.6 | 82.9 | 6.5 | 16.7 | 5.3 | 6.9 | 0 | 69.5 | 1.6 |
| 6067009608 | 31.40 | 62.00 | 60-65% | 7597 | Sacramento | 18.1 | 76.8 | 5.1 | 18.9 | 15.2 | 19.8 | 0.2 | 39.1 | 6.9 |
| 6047000802 | 31.40 | 61.99 | 60-65% | 4296 | Merced | 15.6 | 72.2 | 12.2 | 42.9 | 41.9 | 3.8 | 0.7 | 7.5 | 3.3 |
| 6067009638 | 31.38 | 61.98 | 60-65% | 4330 | Sacramento | 7.6 | 79.2 | 13.2 | 22.1 | 44.5 | 18.7 | 0.2 | 12.4 | 2.2 |
| 6019008000 | 31.37 | 61.96 | 60-65% | 5277 | Fresno | 13.8 | 76.7 | 9.5 | 48.3 | 43.3 | 3.3 | 0.8 | 2.7 | 1.5 |
| 6037481901 | 31.36 | 61.95 | 60-65% | 5770 | Los Angeles | 10.2 | 74.3 | 15.5 | 48.1 | 12.6 | 1 | 0.3 | 36.3 | 1.7 |
| 6037406102 | 31.36 | 61.94 | 60-65% | 5828 | Los Angeles | 14.2 | 77.5 | 8.3 | 55.1 | 29.2 | 4.4 | 0.3 | 9.3 | 1.7 |
| 6107001704 | 31.35 | 61.92 | 60-65% | 6500 | Tulare | 16.8 | 73.8 | 9.4 | 36.8 | 52.6 | 2.2 | 0.6 | 5.6 | 2.2 |
| 6019004211 | 31.35 | 61.91 | 60-65% | 6319 | Fresno | 17.2 | 76.2 | 6.6 | 37.4 | 41.9 | 8 | 0.6 | 8.6 | 3.4 |
| 6087110501 | 31.35 | 61.90 | 60-65% | 7646 | Santa Cruz | 18.3 | 73.2 | 8.5 | 78.2 | 17.3 | 0.5 | 0.4 | 2.2 | 1.4 |
| 6059099510 | 31.35 | 61.89 | 60-65% | 4058 | Orange | 0 | 17.9 | 82.1 | 5.5 | 80.9 | 0.7 | 0.1 | 11.9 | 0.9 |
| 6067009606 | 31.34 | 61.87 | 60-65% | 7159 | Sacramento | 15.9 | 72.4 | 11.7 | 31.5 | 16 | 25.4 | 0.3 | 21.7 | 5 |
| 6073002602 | 31.34 | 61.86 | 60-65% | 4450 | San Diego | 19.4 | 75.7 | 4.9 | 62.6 | 9 | 10.2 | 0.2 | 16.1 | 2 |
| 6067004203 | 31.34 | 61.85 | 60-65% | 5112 | Sacramento | 22.7 | 70.4 | 6.9 | 36.5 | 10 | 21.9 | 0.4 | 26.3 | 4.9 |
| 6053010306 | 31.33 | 61.84 | 60-65% | 1250 | Monterey | 12.8 | 69.6 | 17.6 | 45.3 | 47.5 | 0.7 | 1.1 | 2.6 | 2.8 |
| 6001433400 | 31.31 | 61.82 | 60-65% | 6305 | Alameda | 11.8 | 70 | 18.2 | 11.5 | 22.3 | 10.1 | 0.2 | 52.8 | 3.1 |
| 6087110200 | 31.31 | 61.81 | 60-65% | 7399 | Santa Cruz | 16.5 | 74.2 | 9.3 | 75.7 | 18.1 | 0.2 | 0.4 | 3.8 | 1.7 |
| 6067007014 | 31.30 | 61.80 | 60-65% | 7342 | Sacramento | 15.4 | 77.8 | 6.8 | 40.4 | 26.9 | 17.6 | 0.7 | 9.5 | 4.8 |
| 6013313204 | 31.30 | 61.79 | 60-65% | 5542 | Contra Costa | 15.1 | 75.6 | 9.3 | 45 | 28.2 | 12.5 | 0.3 | 10.7 | 3.4 |
| 6071002801 | 31.29 | 61.77 | 60-65% | 5508 | San Bernardino | 18.5 | 77.4 | 4.1 | 81.1 | 8.7 | 6.5 | 0.3 | 2.3 | 1.1 |
| 6037482522 | 31.29 | 61.76 | 60-65% | 4269 | Los Angeles | 10 | 74.4 | 15.6 | 51.1 | 9.1 | 1.8 | 0 | 36.7 | 1.3 |

| | | | | | | | | | | | | | | |
|---|---|---|---|---|---|---|---|---|---|---|---|---|---|---|
| 6069000702 | 31.29 | 61.75 | 60-65% | 4948 | San Benito | 14.7 | 75.2 | 10.1 | 54.1 | 39.3 | 1.3 | 0.3 | 3.3 | 1.7 |
| 6065042213 | 31.28 | 61.74 | 60-65% | 4194 | Riverside | 7.8 | 80.3 | 11.9 | 22.3 | 47.5 | 6.5 | 0.3 | 19.2 | 4.2 |
| 6059087801 | 31.27 | 61.72 | 60-65% | 5337 | Orange | 15.2 | 73.5 | 11.3 | 44.3 | 30.3 | 3.1 | 0.1 | 19.5 | 2.7 |
| 6019005406 | 31.26 | 61.71 | 60-65% | 3899 | Fresno | 11.2 | 71.2 | 17.6 | 28.4 | 57.8 | 2.9 | 0.8 | 7.4 | 2.6 |
| 6077004002 | 31.25 | 61.70 | 60-65% | 10717 | San Joaquin | 17.2 | 76.2 | 6.6 | 24.6 | 31.6 | 10 | 0.3 | 28.5 | 5 |
| 6019005906 | 31.25 | 61.68 | 60-65% | 2240 | Fresno | 9.6 | 75.4 | 15 | 26.7 | 64.7 | 0.4 | 1 | 4.6 | 2.5 |
| 6001434000 | 31.24 | 61.67 | 60-65% | 4884 | Alameda | 16.4 | 74.8 | 8.8 | 45.8 | 17 | 17.3 | 0.3 | 16.1 | 3.6 |
| 6065043403 | 31.22 | 61.66 | 60-65% | 2847 | Riverside | 18.4 | 69.3 | 12.3 | 47.6 | 37.5 | 9.7 | 0.7 | 1.8 | 2.8 |
| 6037106407 | 31.21 | 61.65 | 60-65% | 2933 | Los Angeles | 16.5 | 67.2 | 16.3 | 76.2 | 14 | 6.4 | 0.1 | 2.5 | 0.8 |
| 6103000900 | 31.21 | 61.63 | 60-65% | 3678 | Tehama | 13.2 | 69.3 | 17.5 | 23.9 | 70.1 | 0.2 | 2.3 | 0.7 | 2.9 |
| 6097153300 | 31.21 | 61.62 | 60-65% | 11010 | Sonoma | 15 | 78.6 | 6.4 | 37.9 | 45.3 | 3.6 | 1.2 | 8.6 | 3.4 |
| 6037555212 | 31.21 | 61.61 | 60-65% | 4561 | Los Angeles | 18.5 | 73.3 | 8.2 | 77.4 | 10.1 | 2.1 | 0.2 | 9 | 1.2 |
| 6019004406 | 31.20 | 61.60 | 60-65% | 5211 | Fresno | 12 | 73.7 | 14.3 | 25 | 59.5 | 4.5 | 0.7 | 6.9 | 3.3 |
| 6053000400 | 31.19 | 61.58 | 60-65% | 7161 | Monterey | 18.1 | 71.1 | 10.8 | 73.8 | 17.5 | 2.2 | 0.4 | 4.7 | 1.4 |
| 6001431000 | 31.18 | 61.57 | 60-65% | 2714 | Alameda | 11.4 | 75.5 | 13.1 | 22.7 | 46.9 | 6.5 | 0.3 | 19.2 | 4.4 |
| 6111000302 | 31.17 | 61.56 | 60-65% | 6786 | Ventura | 15.8 | 70.5 | 13.7 | 68.6 | 28.5 | 0.4 | 0.4 | 0.9 | 1.2 |
| 6059062611 | 31.17 | 61.55 | 60-65% | 4105 | Orange | 7.8 | 83.2 | 9 | 11.2 | 42 | 2.4 | 0.1 | 39.5 | 4.8 |
| 6095252401 | 31.16 | 61.53 | 60-65% | 4559 | Solano | 16 | 75 | 9 | 47.6 | 26.6 | 12.3 | 1 | 6.8 | 5.6 |
| 6037482702 | 31.14 | 61.52 | 60-65% | 2397 | Los Angeles | 8.3 | 69.3 | 22.4 | 44.2 | 7 | 0.3 | 0.1 | 46.6 | 1.8 |
| 6037183101 | 31.14 | 61.51 | 60-65% | 3922 | Los Angeles | 12.7 | 76.4 | 10.9 | 66.5 | 20.8 | 1.8 | 0.4 | 8.5 | 2 |
| 6037128801 | 31.13 | 61.50 | 60-65% | 3307 | Los Angeles | 8.5 | 81.8 | 9.7 | 14.8 | 60.5 | 9.7 | 0.1 | 10.2 | 4.7 |
| 6095252502 | 31.12 | 61.48 | 60-65% | 2275 | Solano | 10.9 | 84.3 | 4.8 | 33.5 | 31.9 | 23.7 | 1 | 4.7 | 5.3 |
| 6073003001 | 31.12 | 61.47 | 60-65% | 4226 | San Diego | 15.3 | 71.7 | 13 | 45.1 | 6.5 | 39.4 | 0.2 | 5.9 | 2.9 |
| 6037275102 | 31.11 | 61.46 | 60-65% | 4226 | Los Angeles | 14.7 | 77.4 | 7.9 | 67.1 | 19.8 | 2.3 | 0.1 | 8.6 | 2.1 |
| 6085505009 | 31.10 | 61.45 | 60-65% | 6256 | Santa Clara | 15.5 | 78.4 | 6.1 | 23.9 | 28.8 | 7 | 0.3 | 35.8 | 4.2 |
| 6077004901 | 31.10 | 61.43 | 60-65% | 7214 | San Joaquin | 13.5 | 73.9 | 12.6 | 27.1 | 68.7 | 0.4 | 0.8 | 1.3 | 1.6 |
| 6059076103 | 31.10 | 61.42 | 60-65% | 9137 | Orange | 16.9 | 77 | 6.1 | 60.7 | 14 | 1.4 | 0.2 | 22.5 | 1.2 |
| 6001435400 | 31.10 | 61.41 | 60-65% | 4503 | Alameda | 12 | 76.4 | 11.6 | 33.1 | 26.3 | 19.5 | 0.6 | 16.2 | 4.4 |
| 6037600704 | 31.08 | 61.39 | 60-65% | 2971 | Los Angeles | 9.9 | 71.6 | 18.5 | 9.7 | 1.8 | 85.1 | 0.2 | 0.8 | 2.5 |
| 6037125402 | 31.08 | 61.38 | 60-65% | 3544 | Los Angeles | 6.8 | 86 | 7.2 | 20 | 59.9 | 9.5 | 0.2 | 6.6 | 3.8 |
| 6067007010 | 31.08 | 61.37 | 60-65% | 3626 | Sacramento | 13.2 | 82.7 | 4.1 | 23.3 | 47.5 | 13.5 | 0.6 | 9.2 | 5.9 |
| 6037106646 | 31.06 | 61.36 | 60-65% | 3237 | Los Angeles | 10.8 | 73.1 | 16.1 | 34.2 | 42.4 | 3.5 | 0.1 | 17 | 2.9 |
| 6037403312 | 31.06 | 61.34 | 60-65% | 5160 | Los Angeles | 11.4 | 77.9 | 10.7 | 33.8 | 24.1 | 4.4 | 0.2 | 35.2 | 2.4 |
| 6085503213 | 31.05 | 61.33 | 60-65% | 4494 | Santa Clara | 14.3 | 76.4 | 9.3 | 33.6 | 6.3 | 2.2 | 0.1 | 57 | 0.8 |
| 6037650001 | 31.02 | 61.32 | 60-65% | 5853 | Los Angeles | 9.2 | 72 | 18.8 | 20 | 25.4 | 2.9 | 0.2 | 47.4 | 4.2 |
| 6067009800 | 31.02 | 61.31 | 60-65% | 1984 | Sacramento | 8.1 | 67.3 | 24.6 | 26.1 | 66.2 | 0.8 | 0.6 | 3.3 | 3 |
| 6037190402 | 31.01 | 61.29 | 60-65% | 2487 | Los Angeles | 6 | 79.1 | 14.9 | 17.9 | 60.1 | 4.5 | 0.1 | 14 | 3.5 |
| 6001438400 | 31.00 | 61.28 | 60-65% | 2331 | Alameda | 9.6 | 74.5 | 15.9 | 32.7 | 24.6 | 5.1 | 0.5 | 33.4 | 3.7 |
| 6113011206 | 30.97 | 61.27 | 60-65% | 7329 | Yolo | 14.2 | 78.4 | 7.4 | 33.8 | 49.5 | 2.3 | 0.5 | 11 | 2.8 |
| 6037570701 | 30.97 | 61.26 | 60-65% | 6569 | Los Angeles | 11.9 | 74.7 | 13.4 | 25.3 | 30.9 | 20 | 0.2 | 20 | 3.6 |
| 6095252904 | 30.95 | 61.24 | 60-65% | 4726 | Solano | 10.7 | 76.6 | 12.7 | 20 | 60 | 5.5 | 0.8 | 9.8 | 3.8 |
| 6037267501 | 30.94 | 61.23 | 60-65% | 5379 | Los Angeles | 8.9 | 84.4 | 6.7 | 32.7 | 40.7 | 2.5 | 0.1 | 20.2 | 3.8 |
| 6065043701 | 30.93 | 61.22 | 60-65% | 3512 | Riverside | 11.7 | 66.2 | 22.1 | 26.2 | 67.4 | 2.2 | 1.2 | 1.4 | 1.7 |
| 6065043206 | 30.93 | 61.21 | 60-65% | 7606 | Riverside | 14.1 | 75.7 | 10.2 | 29.9 | 53.2 | 5.8 | 0.4 | 7.2 | 3.5 |
| 6037207501 | 30.91 | 61.19 | 60-65% | 2218 | Los Angeles | 4.2 | 84.4 | 11.4 | 14.5 | 27.5 | 7.9 | 0.3 | 46.4 | 3.3 |
| 6059032014 | 30.90 | 61.18 | 60-65% | 6323 | Orange | 13.9 | 65.2 | 20.9 | 52 | 36 | 1 | 0.2 | 8.5 | 2.2 |
| 6037402002 | 30.90 | 61.17 | 60-65% | 3913 | Los Angeles | 11.3 | 71.2 | 17.5 | 32.5 | 50.7 | 5.8 | 0.4 | 7 | 3.6 |
| 6065043821 | 30.90 | 61.16 | 60-65% | 2707 | Riverside | 22.6 | 71.7 | 5.7 | 47.4 | 33 | 9.7 | 0.6 | 6.8 | 2.5 |
| 6065051100 | 30.89 | 61.14 | 60-65% | 6188 | Riverside | 18.1 | 77.4 | 4.5 | 47 | 15.5 | 26.4 | 0.3 | 7.4 | 3.4 |
| 6059001507 | 30.88 | 61.13 | 60-65% | 4665 | Orange | 11.2 | 79.1 | 9.7 | 25.6 | 49 | 1.9 | 0.3 | 19.8 | 3.4 |
| 6059074902 | 30.88 | 61.12 | 60-65% | 6627 | Orange | 22.4 | 74.6 | 3 | 97.3 | 1.6 | 0.1 | 0.1 | 0.8 | 0.1 |
| 6029000700 | 30.87 | 61.10 | 60-65% | 4825 | Kern | 14.5 | 74.6 | 10.9 | 42.5 | 50.5 | 1.7 | 0.8 | 1.8 | 2.6 |
| 6059011712 | 30.86 | 61.09 | 60-65% | 4865 | Orange | 12 | 78.6 | 9.4 | 50.9 | 30.1 | 2.3 | 0.2 | 14.1 | 2.4 |
| 6065043312 | 30.86 | 61.08 | 60-65% | 3862 | Riverside | 15.8 | 74.3 | 9.9 | 53.5 | 39.6 | 2.7 | 0.8 | 1.9 | 1.6 |
| 6037106010 | 30.86 | 61.07 | 60-65% | 3152 | Los Angeles | 13.5 | 76.4 | 10.1 | 67.1 | 19.7 | 5.2 | 0.3 | 5.8 | 1.9 |
| 6059087802 | 30.85 | 61.05 | 60-65% | 7146 | Orange | 14.3 | 75.8 | 9.9 | 45.3 | 25.8 | 2.8 | 0.3 | 23.4 | 2.4 |
| 6037554512 | 30.84 | 61.04 | 60-65% | 6108 | Los Angeles | 8.1 | 73.4 | 18.5 | 9.3 | 14.3 | 6.6 | 0 | 66.9 | 2.8 |
| 6053014302 | 30.81 | 61.03 | 60-65% | 4024 | Monterey | 13.1 | 75.5 | 11.4 | 24.7 | 39.5 | 6.3 | 0.3 | 22.5 | 6.8 |
| 6013307205 | 30.81 | 61.02 | 60-65% | 6595 | Contra Costa | 14.9 | 75.5 | 9.6 | 31.1 | 38.8 | 17.2 | 0.5 | 7.4 | 5 |
| 6087110100 | 30.81 | 61.00 | 60-65% | 7466 | Santa Cruz | 17 | 68.2 | 14.8 | 74.8 | 19.9 | 0.3 | 0.4 | 3.4 | 1.2 |
| 6037125401 | 30.81 | 60.99 | 60-65% | 4024 | Los Angeles | 6 | 87.8 | 6.2 | 27.4 | 46.7 | 14.3 | 0.2 | 7.2 | 4.2 |
| 6037408003 | 30.80 | 60.98 | 60-65% | 4992 | Los Angeles | 13 | 76.6 | 10.4 | 60.5 | 9.9 | 4.2 | 0.2 | 23.8 | 1.3 |
| 6011000500 | 30.79 | 60.97 | 60-65% | 2565 | Colusa | 17 | 70.6 | 12.4 | 48.4 | 47.2 | 0.3 | 1.4 | 1.4 | 1.4 |
| 6037109601 | 30.79 | 60.95 | 60-65% | 5020 | Los Angeles | 13.2 | 75.5 | 11.3 | 70 | 15 | 2.9 | 0.1 | 10.2 | 1.6 |
| 6001433103 | 30.78 | 60.94 | 60-65% | 3530 | Alameda | 16.3 | 76.6 | 7.1 | 39.9 | 14.5 | 24.2 | 0.2 | 17.7 | 3.4 |
| 6037102104 | 30.75 | 60.93 | 60-65% | 3648 | Los Angeles | 8.8 | 76.8 | 14.4 | 14.6 | 66.8 | 2.4 | 0.1 | 13 | 3.2 |

| | | | | | | | | | | | | | | |
|---|---|---|---|---|---|---|---|---|---|---|---|---|---|---|
| 6071008704 | 30.74 | 60.92 | 60-65% | 7789 | San Bernardino | 12.9 | 72.8 | 14.3 | 28.1 | 65.1 | 1.6 | 0.4 | 2.7 | 1.9 |
| 6095250601 | 30.74 | 60.90 | 60-65% | 4695 | Solano | 14.9 | 75.7 | 9.4 | 35.1 | 20.2 | 24.3 | 0.6 | 13.8 | 6 |
| 6071007409 | 30.74 | 60.89 | 60-65% | 5760 | San Bernardino | 16.6 | 74.4 | 9 | 51.9 | 29.5 | 10.8 | 0.4 | 4.9 | 2.5 |
| 6073002402 | 30.71 | 60.88 | 60-65% | 5254 | San Diego | 19.1 | 76.9 | 4 | 68.7 | 6.4 | 9.3 | 0.2 | 13.5 | 2 |
| 6065043404 | 30.71 | 60.87 | 60-65% | 2544 | Riverside | 7.4 | 47 | 45.6 | 25.4 | 66.4 | 3.6 | 0.7 | 1.7 | 2.2 |
| 6037403722 | 30.70 | 60.85 | 60-65% | 5734 | Los Angeles | 15.8 | 76 | 8.2 | 62.5 | 21.7 | 3.7 | 0.2 | 9.8 | 2.1 |
| 6001408700 | 30.69 | 60.84 | 60-65% | 7207 | Alameda | 16.5 | 74.9 | 8.6 | 44.9 | 3.9 | 43.6 | 0.1 | 5.4 | 2 |
| 6059099247 | 30.69 | 60.83 | 60-65% | 3287 | Orange | 13.2 | 77.4 | 9.4 | 45.2 | 6.8 | 0.5 | 0.3 | 46.3 | 0.8 |
| 6037189904 | 30.68 | 60.81 | 60-65% | 2260 | Los Angeles | 3.3 | 89.8 | 6.9 | 13.3 | 70.6 | 4.3 | 0.1 | 7.3 | 4.4 |
| 6065042402 | 30.66 | 60.80 | 60-65% | 4780 | Riverside | 13.2 | 79.1 | 7.7 | 52.8 | 27.7 | 11.4 | 0.4 | 4.9 | 2.8 |
| 6071004504 | 30.66 | 60.79 | 60-65% | 8145 | San Bernardino | 17.5 | 78.6 | 3.9 | 42.6 | 35 | 13.4 | 0.5 | 5 | 3.6 |
| 6089011002 | 30.66 | 60.78 | 60-65% | 5324 | Shasta | 12 | 69.4 | 18.6 | 7.8 | 83.6 | 0.5 | 3.2 | 1.4 | 3.6 |
| 6037269800 | 30.65 | 60.76 | 60-65% | 3458 | Los Angeles | 9.7 | 82.5 | 7.8 | 26 | 38.5 | 11.1 | 0.3 | 19.7 | 4.4 |
| 6037408505 | 30.65 | 60.75 | 60-65% | 2682 | Los Angeles | 10 | 73.7 | 16.3 | 44.9 | 17.6 | 1.8 | 0.1 | 34.2 | 1.4 |
| 6007000603 | 30.64 | 60.74 | 60-65% | 3130 | Butte | 3.7 | 92.2 | 4.1 | 12.2 | 78.8 | 1.7 | 0.4 | 2.1 | 4.9 |
| 6073020601 | 30.63 | 60.73 | 60-65% | 5560 | San Diego | 20.6 | 75 | 4.4 | 75.6 | 18.5 | 2.1 | 0.5 | 2.1 | 1.2 |
| 6001425101 | 30.63 | 60.71 | 60-65% | 1596 | Alameda | 2.6 | 73.3 | 24.1 | 3.5 | 59 | 6 | 0 | 27 | 4.4 |
| 6085503212 | 30.63 | 60.70 | 60-65% | 4058 | Santa Clara | 12.3 | 78.1 | 9.6 | 31.5 | 7.9 | 2.6 | 0.3 | 56 | 1.7 |
| 6037113301 | 30.62 | 60.69 | 60-65% | 2201 | Los Angeles | 9.2 | 70 | 20.8 | 19.6 | 57.4 | 4 | 0.1 | 15.8 | 3.1 |
| 6037572002 | 30.62 | 60.68 | 60-65% | 4409 | Los Angeles | 9.2 | 67.7 | 23.1 | 17.4 | 37.7 | 20.3 | 0.4 | 20 | 4.2 |
| 6037311400 | 30.61 | 60.66 | 60-65% | 2274 | Los Angeles | 11.2 | 74.4 | 14.4 | 16.6 | 70.4 | 1.5 | 0.2 | 8.3 | 3 |
| 6037214800 | 30.60 | 60.65 | 60-65% | 2573 | Los Angeles | 6.5 | 76 | 17.5 | 7 | 82.6 | 3.1 | 0.2 | 4.5 | 2.5 |
| 6037602302 | 30.60 | 60.64 | 60-65% | 3477 | Los Angeles | 12.4 | 73.3 | 14.3 | 20.4 | 61.3 | 2.4 | 0.2 | 11.3 | 4.4 |
| 6085512506 | 30.60 | 60.63 | 60-65% | 6686 | Santa Clara | 19.4 | 74.5 | 6.1 | 72.3 | 18.8 | 1.6 | 0.4 | 5 | 1.9 |
| 6037311600 | 30.59 | 60.61 | 60-65% | 7249 | Los Angeles | 8.4 | 80.2 | 11.4 | 16 | 64.4 | 5.1 | 0.3 | 11.1 | 3.2 |
| 6081612100 | 30.58 | 60.60 | 60-65% | 7041 | San Mateo | 20 | 76.3 | 3.7 | 60.4 | 20.3 | 8 | 0.1 | 9.1 | 2.1 |
| 6047000702 | 30.56 | 60.59 | 60-65% | 4903 | Merced | 14.9 | 73.7 | 11.4 | 30.5 | 58.7 | 1.7 | 0.5 | 6.4 | 2.2 |
| 6037702801 | 30.55 | 60.58 | 60-65% | 5205 | Los Angeles | 10 | 75.1 | 14.9 | 31.1 | 41.2 | 4.8 | 0.1 | 19 | 3.8 |
| 6001424002 | 30.55 | 60.56 | 60-65% | 2172 | Alameda | 11.6 | 77.2 | 11.2 | 17 | 27.9 | 41.7 | 0.7 | 7.5 | 5.1 |
| 6067001900 | 30.55 | 60.55 | 60-65% | 2771 | Sacramento | 6 | 85.7 | 8.3 | 21.3 | 57.8 | 6.3 | 1 | 8.6 | 5.1 |
| 6067003203 | 30.54 | 60.54 | 60-65% | 3200 | Sacramento | 16.1 | 74.9 | 9 | 23.7 | 8.2 | 10.6 | 0.4 | 53.3 | 3.8 |
| 6059088104 | 30.53 | 60.52 | 60-65% | 4780 | Orange | 13.9 | 70.8 | 15.3 | 36.8 | 29.2 | 1.9 | 0.3 | 29.9 | 1.9 |
| 6071002304 | 30.50 | 60.51 | 60-65% | 18904 | San Bernardino | 17 | 78.2 | 4.8 | 42.1 | 23.9 | 16.4 | 0.2 | 14.4 | 3 |
| 6073010402 | 30.50 | 60.50 | 60-65% | 5558 | San Diego | 16.1 | 76.8 | 7.1 | 58 | 22.1 | 4.6 | 0.6 | 10.9 | 3.8 |
| 6037408137 | 30.50 | 60.49 | 60-65% | 4152 | Los Angeles | 12.5 | 78.6 | 8.9 | 39.8 | 9.7 | 6.6 | 0.2 | 42 | 1.7 |
| 6037106406 | 30.49 | 60.47 | 60-65% | 4962 | Los Angeles | 14.5 | 75.2 | 10.3 | 70.8 | 18.8 | 2.6 | 0.6 | 6.1 | 1 |
| 6071011203 | 30.48 | 60.46 | 60-65% | 1593 | San Bernardino | 9.6 | 67.5 | 22.9 | 17.4 | 78.7 | 0.2 | 0.6 | 1.1 | 2.1 |
| 6065043602 | 30.47 | 60.45 | 60-65% | 3953 | Riverside | 19.8 | 73.2 | 7 | 71.3 | 21.3 | 3.7 | 0.8 | 0.9 | 2 |
| 6037900504 | 30.47 | 60.44 | 60-65% | 5816 | Los Angeles | 18.5 | 75.8 | 5.7 | 41.4 | 29.3 | 21.4 | 0.5 | 5 | 2.3 |
| 6001405700 | 30.46 | 60.42 | 60-65% | 3243 | Alameda | 12.4 | 78.7 | 8.9 | 17.2 | 10.7 | 32.3 | 0.4 | 36 | 3.4 |
| 6037185100 | 30.46 | 60.41 | 60-65% | 6295 | Los Angeles | 11.9 | 75.6 | 12.5 | 53.1 | 31.6 | 2.6 | 0.2 | 9.9 | 2.6 |
| 6065048901 | 30.46 | 60.40 | 60-65% | 3805 | Riverside | 16.1 | 78.3 | 5.6 | 59.8 | 19.7 | 14.5 | 0.4 | 3.2 | 2.5 |
| 6019003104 | 30.45 | 60.39 | 60-65% | 3810 | Fresno | 12.9 | 75.3 | 11.8 | 33.1 | 48.2 | 3.5 | 0.5 | 11.8 | 2.9 |
| 6073005400 | 30.45 | 60.37 | 60-65% | 7435 | San Diego | 2.7 | 82.8 | 14.5 | 11.4 | 71.9 | 5.2 | 0.3 | 8.6 | 2.6 |
| 6073003304 | 30.45 | 60.36 | 60-65% | 3563 | San Diego | 20 | 73.9 | 6.1 | 65.6 | 4.9 | 13.5 | 0.1 | 14.3 | 1.5 |
| 6099003604 | 30.45 | 60.35 | 60-65% | 8092 | Stanislaus | 14.2 | 74.5 | 11.3 | 28.6 | 65.2 | 0.4 | 0.6 | 3 | 2.2 |
| 6037554103 | 30.44 | 60.34 | 60-65% | 1572 | Los Angeles | 15.8 | 76.6 | 7.6 | 54.3 | 21.1 | 9.5 | 0.1 | 12.5 | 2.5 |
| 6037430902 | 30.44 | 60.32 | 60-65% | 4652 | Los Angeles | 13.2 | 75.4 | 11.4 | 39.6 | 30 | 5.4 | 0.2 | 22.1 | 2.6 |
| 6037183701 | 30.44 | 60.31 | 60-65% | 3922 | Los Angeles | 14.6 | 78 | 7.4 | 83.1 | 8.2 | 2.7 | 0.4 | 4.5 | 1 |
| 6065042622 | 30.42 | 60.30 | 60-65% | 4107 | Riverside | 16.5 | 79.3 | 4.2 | 44.2 | 18.2 | 18 | 0.3 | 15.6 | 3.7 |
| 6095252608 | 30.41 | 60.29 | 60-65% | 3807 | Solano | 18.9 | 71.8 | 9.3 | 40.2 | 23.6 | 21.4 | 0.1 | 8.6 | 6.1 |
| 6059076206 | 30.40 | 60.27 | 60-65% | 4517 | Orange | 13.2 | 70.7 | 16.1 | 33.9 | 58.1 | 0.8 | 0.2 | 5.2 | 1.8 |
| 6037910501 | 30.40 | 60.26 | 60-65% | 5339 | Los Angeles | 25.3 | 68.2 | 6.5 | 54.9 | 10.5 | 28.9 | 0.2 | 2.4 | 3 |
| 6001437400 | 30.40 | 60.25 | 60-65% | 3408 | Alameda | 15.3 | 74.3 | 10.4 | 55.8 | 18.5 | 4.5 | 0.5 | 17.7 | 3 |
| 6001407600 | 30.39 | 60.23 | 60-65% | 6027 | Alameda | 15.6 | 76 | 8.4 | 34.8 | 11.4 | 35.3 | 0.6 | 13.9 | 4 |
| 6037432101 | 30.38 | 60.22 | 60-65% | 4179 | Los Angeles | 11.7 | 74.8 | 13.5 | 21.9 | 21.9 | 0.7 | 0.2 | 53.9 | 1.4 |
| 6037271801 | 30.35 | 60.21 | 60-65% | 3635 | Los Angeles | 9 | 82.9 | 8.1 | 33.9 | 33.1 | 5 | 0.2 | 23.6 | 4.1 |
| 6071010803 | 30.35 | 60.20 | 60-65% | 3375 | San Bernardino | 11 | 78.2 | 10.8 | 15.8 | 78.4 | 0.7 | 0.9 | 1.2 | 3.1 |
| 6085503711 | 30.35 | 60.18 | 60-65% | 4763 | Santa Clara | 18.3 | 76.2 | 5.5 | 80.6 | 1.8 | 1.3 | 0.1 | 15.3 | 0.9 |
| 6037482701 | 30.35 | 60.17 | 60-65% | 4298 | Los Angeles | 11.7 | 71.9 | 16.4 | 63.7 | 5.2 | 0.3 | 0.2 | 29.8 | 0.8 |
| 6111004506 | 30.35 | 60.16 | 60-65% | 7858 | Ventura | 22.2 | 73.8 | 4 | 88.6 | 4.1 | 1.1 | 0.2 | 5.2 | 0.9 |
| 6111002200 | 30.34 | 60.15 | 60-65% | 6288 | Ventura | 15.6 | 78.5 | 5.9 | 58.8 | 35.4 | 1.2 | 0.4 | 1.9 | 2.3 |
| 6085500902 | 30.33 | 60.13 | 60-65% | 4523 | Santa Clara | 2.6 | 96.2 | 1.2 | 23.3 | 32.5 | 9.8 | 0.4 | 30 | 3.9 |
| 6065041809 | 30.33 | 60.12 | 60-65% | 5834 | Riverside | 12.3 | 74.9 | 12.8 | 37.2 | 45.5 | 6.3 | 0.4 | 8.1 | 2.5 |
| 6037185204 | 30.33 | 60.11 | 60-65% | 2091 | Los Angeles | 11.2 | 73.5 | 15.3 | 42.9 | 27.8 | 2.6 | 0 | 23.6 | 3.2 |
| 6037183702 | 30.33 | 60.10 | 60-65% | 2805 | Los Angeles | 12.2 | 77.7 | 10.1 | 57.8 | 16.2 | 4 | 0.3 | 19.9 | 1.9 |

| | | | | | | | | | | | | | | |
|---|---|---|---|---|---|---|---|---|---|---|---|---|---|---|
| 6067007422 | 30.32 | 60.08 | 60-65% | 2692 | Sacramento | 17.7 | 75.7 | 6.6 | 21.5 | 56.8 | 10.1 | 0.8 | 5.6 | 5.1 |
| 6071011205 | 30.32 | 60.07 | 60-65% | 1239 | San Bernardino | 13.9 | 69.8 | 16.3 | 37 | 55 | 0.4 | 1.2 | 2.9 | 3.5 |
| 6111004600 | 30.30 | 60.06 | 60-65% | 2126 | Ventura | 27.5 | 72.2 | 0.3 | 20.6 | 62.1 | 6.7 | 0.5 | 5.1 | 4.9 |
| 6037310202 | 30.30 | 60.05 | 60-65% | 4985 | Los Angeles | 10.1 | 78.5 | 11.4 | 13 | 71.5 | 1.8 | 0.1 | 9.5 | 4.1 |
| 6037900804 | 30.30 | 60.03 | 60-65% | 3489 | Los Angeles | 20.1 | 73.7 | 6.2 | 53 | 19.2 | 22.4 | 0.3 | 2.4 | 2.7 |
| 6073008511 | 30.30 | 60.02 | 60-65% | 2633 | San Diego | 8.3 | 81.6 | 10.1 | 16.3 | 51.3 | 4.5 | 0.4 | 23.3 | 4.2 |
| 6071007403 | 30.29 | 60.01 | 60-65% | 6947 | San Bernardino | 13.9 | 73.1 | 13 | 40.6 | 36.7 | 15.7 | 0.4 | 3.9 | 2.8 |
| 6037404302 | 30.29 | 59.99 | 55-60% | 2498 | Los Angeles | 14.2 | 77.8 | 8 | 85.9 | 9.1 | 1.1 | 0.1 | 3.1 | 0.6 |
| 6037273200 | 30.28 | 59.98 | 55-60% | 3711 | Los Angeles | 8.9 | 84.5 | 6.6 | 34.5 | 47.7 | 11.9 | 0.6 | 2.4 | 2.9 |
| 6059076000 | 30.27 | 59.97 | 55-60% | 8371 | Orange | 11.2 | 77.9 | 10.9 | 44.7 | 39.6 | 2.1 | 0.3 | 11.3 | 2 |
| 6001406400 | 30.26 | 59.96 | 55-60% | 2145 | Alameda | 10.1 | 60.3 | 29.6 | 17.3 | 24.6 | 27.5 | 0.5 | 27.1 | 3 |
| 6111003300 | 30.26 | 59.94 | 55-60% | 8187 | Ventura | 15.4 | 73.6 | 11 | 73 | 17.9 | 3.6 | 0.2 | 3.3 | 2 |
| 6085502102 | 30.26 | 59.93 | 55-60% | 7469 | Santa Clara | 16.2 | 76.3 | 7.5 | 50.8 | 27.4 | 5.1 | 0.2 | 13.9 | 2.6 |
| 6037310602 | 30.25 | 59.92 | 55-60% | 2655 | Los Angeles | 9.9 | 76.4 | 13.7 | 20.5 | 58.5 | 2.7 | 0 | 15.4 | 2.9 |
| 6001435500 | 30.23 | 59.91 | 55-60% | 3725 | Alameda | 14 | 74.4 | 11.6 | 41.8 | 28.2 | 12.9 | 0.7 | 12.5 | 3.9 |
| 6065042410 | 30.22 | 59.89 | 55-60% | 4882 | Riverside | 12.8 | 79.6 | 7.6 | 38.8 | 27.5 | 21.9 | 0.3 | 7.8 | 3.6 |
| 6077005003 | 30.22 | 59.88 | 55-60% | 5417 | San Joaquin | 14.6 | 74 | 11.4 | 20.9 | 68.7 | 1.4 | 0.6 | 5.9 | 2.6 |
| 6107002002 | 30.22 | 59.87 | 55-60% | 4830 | Tulare | 15.4 | 69.9 | 14.7 | 37.7 | 54.2 | 1.8 | 0.5 | 3.2 | 2.5 |
| 6085501101 | 30.21 | 59.86 | 55-60% | 4074 | Santa Clara | 9.8 | 77.8 | 12.4 | 38.6 | 28.5 | 3.3 | 0.4 | 24.5 | 4.7 |
| 6037573403 | 30.21 | 59.84 | 55-60% | 3208 | Los Angeles | 11.6 | 78.6 | 9.8 | 18.6 | 41.7 | 11.5 | 0.2 | 24 | 3.9 |
| 6059088905 | 30.20 | 59.83 | 55-60% | 5282 | Orange | 11.7 | 72.8 | 15.5 | 17.8 | 11.1 | 0.4 | 0 | 69.4 | 1.2 |
| 6037408141 | 30.18 | 59.82 | 55-60% | 5450 | Los Angeles | 15.5 | 76.5 | 8 | 81.6 | 3.7 | 1.5 | 0.1 | 12.5 | 0.6 |
| 6037217002 | 30.18 | 59.81 | 55-60% | 4977 | Los Angeles | 10.2 | 78 | 11.8 | 10.9 | 66.3 | 9.6 | 0.1 | 8.5 | 4.6 |
| 6037311700 | 30.16 | 59.79 | 55-60% | 6137 | Los Angeles | 8.7 | 74.6 | 16.7 | 19.1 | 65.1 | 2.5 | 0.1 | 10.1 | 3.1 |
| 6073012200 | 30.16 | 59.78 | 55-60% | 3326 | San Diego | 15.2 | 74.8 | 10 | 71.1 | 15 | 2.1 | 0.2 | 9.5 | 2 |
| 6037277100 | 30.16 | 59.77 | 55-60% | 3004 | Los Angeles | 12.8 | 74.3 | 12.9 | 24.1 | 51.7 | 4.8 | 0.1 | 13.6 | 5.7 |
| 6099000906 | 30.16 | 59.76 | 55-60% | 5810 | Stanislaus | 12.1 | 75 | 12.9 | 24 | 65.2 | 3.1 | 0.6 | 4.1 | 3 |
| 6073016302 | 30.14 | 59.74 | 55-60% | 5444 | San Diego | 17 | 76.5 | 6.5 | 41.1 | 42.2 | 7.2 | 0.3 | 4 | 5.3 |
| 6037920017 | 30.14 | 59.73 | 55-60% | 4342 | Los Angeles | 10.6 | 79.7 | 9.7 | 24.9 | 65.6 | 1.3 | 0.5 | 5.2 | 2.5 |
| 6037504002 | 30.13 | 59.72 | 55-60% | 5383 | Los Angeles | 11.6 | 75.9 | 12.5 | 43.1 | 41.5 | 2.1 | 0.4 | 10.6 | 2.3 |
| 6059099249 | 30.12 | 59.70 | 55-60% | 4449 | Orange | 20.5 | 75.4 | 4.1 | 81.7 | 1.7 | 0.4 | 0.2 | 15.3 | 0.7 |
| 6037553400 | 30.12 | 59.69 | 55-60% | 3861 | Los Angeles | 13.9 | 77.5 | 8.6 | 82.6 | 9.1 | 2.3 | 0.4 | 4.3 | 1.4 |
| 6037481605 | 30.10 | 59.68 | 55-60% | 3387 | Los Angeles | 10.2 | 76.8 | 13 | 35 | 4.7 | 0.3 | 0.2 | 58.4 | 1.5 |
| 6007003400 | 30.10 | 59.67 | 55-60% | 2956 | Butte | 15.5 | 68 | 16.5 | 36.9 | 56.2 | 0.2 | 1.2 | 3 | 2.6 |
| 6001405402 | 30.09 | 59.65 | 55-60% | 3114 | Alameda | 12.3 | 78.1 | 9.6 | 19.7 | 8.8 | 23.1 | 0.1 | 45.8 | 2.4 |
| 6037482002 | 30.08 | 59.64 | 55-60% | 6947 | Los Angeles | 10.8 | 69.4 | 19.8 | 25.6 | 5.2 | 0.5 | 0.2 | 66.7 | 1.9 |
| 6059063702 | 30.08 | 59.63 | 55-60% | 5767 | Orange | 13 | 80.2 | 6.8 | 54.2 | 37.3 | 1.1 | 0.3 | 5.3 | 1.8 |
| 6037481102 | 30.07 | 59.62 | 55-60% | 3624 | Los Angeles | 11.4 | 79.8 | 8.8 | 27.6 | 7.8 | 2.2 | 0.1 | 60.2 | 2.2 |
| 6037405500 | 30.07 | 59.60 | 55-60% | 6808 | Los Angeles | 13.3 | 75.2 | 11.5 | 61.8 | 19.3 | 2.3 | 0.1 | 14.8 | 1.7 |
| 6073018517 | 30.07 | 59.59 | 55-60% | 4127 | San Diego | 10.8 | 71.4 | 17.8 | 30.5 | 54.7 | 4.5 | 0.3 | 6.8 | 3.1 |
| 6037269906 | 30.04 | 59.58 | 55-60% | 2878 | Los Angeles | 6.8 | 88.1 | 5.1 | 23.2 | 39.2 | 10.1 | 0.2 | 23.4 | 3.9 |
| 6111004717 | 30.04 | 59.57 | 55-60% | 4120 | Ventura | 19.8 | 74.3 | 5.9 | 88 | 4.3 | 1.3 | 0.2 | 5.4 | 0.7 |
| 6013367100 | 30.04 | 59.55 | 55-60% | 5099 | Contra Costa | 13 | 72.9 | 14.1 | 29.6 | 8.9 | 43.1 | 0.1 | 14.8 | 3.5 |
| 6111005600 | 30.03 | 59.54 | 55-60% | 9976 | Ventura | 14.3 | 70.2 | 15.5 | 24.8 | 58.7 | 1.6 | 0.2 | 11.8 | 2.9 |
| 6019004408 | 30.03 | 59.53 | 55-60% | 3517 | Fresno | 10.5 | 78.7 | 10.8 | 26.8 | 54.1 | 4.7 | 0.5 | 10.9 | 3 |
| 6037406500 | 30.03 | 59.52 | 55-60% | 6705 | Los Angeles | 14.3 | 76 | 9.7 | 60.9 | 16.6 | 3 | 0.2 | 17.3 | 2 |
| 6013301000 | 30.02 | 59.50 | 55-60% | 3659 | Contra Costa | 9.8 | 70.9 | 19.3 | 16.3 | 70.8 | 4.7 | 0.5 | 4.3 | 3.4 |
| 6085512508 | 30.00 | 59.49 | 55-60% | 7955 | Santa Clara | 15.2 | 73.4 | 11.4 | 58.3 | 34.4 | 0.9 | 0.3 | 4.5 | 1.6 |
| 6037401500 | 30.00 | 59.48 | 55-60% | 5572 | Los Angeles | 11.4 | 78.4 | 10.2 | 45.1 | 40.2 | 4.3 | 0.4 | 7.5 | 2.5 |
| 6001403400 | 29.99 | 59.47 | 55-60% | 4146 | Alameda | 5 | 76.3 | 18.7 | 9.3 | 32.6 | 19.7 | 0.3 | 32.7 | 5.4 |
| 6085508900 | 29.99 | 59.45 | 55-60% | 5273 | Santa Clara | 15.6 | 77.2 | 7.2 | 41.7 | 18.4 | 1.8 | 0.3 | 35 | 2.7 |
| 6077005308 | 29.98 | 59.44 | 55-60% | 4189 | San Joaquin | 15.3 | 73.9 | 10.8 | 38 | 37.5 | 6.9 | 0.6 | 12.7 | 4.3 |
| 6001442500 | 29.98 | 59.43 | 55-60% | 7371 | Alameda | 12.5 | 74.7 | 12.8 | 23.7 | 28.7 | 3.2 | 0.3 | 40.1 | 4 |
| 6013320004 | 29.96 | 59.41 | 55-60% | 6216 | Contra Costa | 12.8 | 78.9 | 8.3 | 15 | 65.7 | 3.4 | 0.6 | 10.8 | 4.5 |
| 6037503501 | 29.96 | 59.40 | 55-60% | 6481 | Los Angeles | 14.8 | 77.1 | 8.1 | 68.3 | 25 | 1.1 | 0.4 | 3.9 | 1.2 |
| 6077003306 | 29.96 | 59.39 | 55-60% | 4229 | San Joaquin | 15.9 | 72.8 | 11.3 | 42.5 | 20.9 | 9.6 | 0.5 | 22.1 | 4.4 |
| 6065040616 | 29.96 | 59.38 | 55-60% | 7610 | Riverside | 18.4 | 76.1 | 5.5 | 35.9 | 20.8 | 10.9 | 0.1 | 29.4 | 2.9 |
| 6059110604 | 29.96 | 59.36 | 55-60% | 8117 | Orange | 9.8 | 75.1 | 15.1 | 16.5 | 29.6 | 2.7 | 0.2 | 49 | 2.1 |
| 6059088106 | 29.95 | 59.35 | 55-60% | 4638 | Orange | 12.3 | 77.5 | 10.2 | 31.6 | 27.3 | 1.3 | 0.7 | 36.9 | 2.2 |
| 6113011400 | 29.95 | 59.34 | 55-60% | 4193 | Yolo | 13.8 | 70.9 | 15.3 | 48.6 | 44.4 | 2.8 | 0.6 | 1.4 | 2.2 |
| 6067003800 | 29.95 | 59.33 | 55-60% | 5083 | Sacramento | 14.2 | 70.8 | 15 | 33.5 | 19.3 | 26.4 | 0.3 | 16.1 | 4.5 |
| 6053001200 | 29.94 | 59.31 | 55-60% | 3178 | Monterey | 11.9 | 73.1 | 15 | 40.2 | 51.7 | 1.2 | 0.3 | 4.3 | 2.4 |
| 6001435700 | 29.93 | 59.30 | 55-60% | 4594 | Alameda | 14.5 | 74.5 | 11 | 45 | 27 | 7.3 | 0.2 | 17.6 | 2.9 |
| 6065049800 | 29.93 | 59.29 | 55-60% | 3771 | Riverside | 16.1 | 77.1 | 6.8 | 35.3 | 52.1 | 3.5 | 0.3 | 5.1 | 3.7 |
| 6037404504 | 29.93 | 59.28 | 55-60% | 5266 | Los Angeles | 17.8 | 75.6 | 6.6 | 84.4 | 6.4 | 2.4 | 0.2 | 6 | 0.7 |
| 6095251803 | 29.92 | 59.26 | 55-60% | 4988 | Solano | 14.4 | 72.5 | 13.1 | 38 | 16.4 | 12.9 | 0.1 | 28.8 | 3.8 |

| | | | | | | | | | | | | | | | |
|---|---|---|---|---|---|---|---|---|---|---|---|---|---|---|---|
| 6085500300 | 29.92 | 59.25 | 55-60% | 3140 | Santa Clara | 11.2 | 83.4 | 5.4 | 38.7 | 41.7 | 3.3 | 0.6 | 11.9 | 3.9 |
| 6107002302 | 29.91 | 59.24 | 55-60% | 4570 | Tulare | 16.3 | 73.8 | 9.9 | 41.1 | 51.3 | 2.7 | 0.7 | 2.4 | 1.8 |
| 6037702802 | 29.90 | 59.23 | 55-60% | 2282 | Los Angeles | 11.4 | 75.3 | 13.3 | 40.4 | 41.8 | 2.7 | 0.4 | 11 | 3.6 |
| 6103000800 | 29.90 | 59.21 | 55-60% | 4112 | Tehama | 14.2 | 71.8 | 14 | 34.9 | 59.2 | 0.4 | 2.5 | 0.6 | 2.3 |
| 6037181000 | 29.90 | 59.20 | 55-60% | 6144 | Los Angeles | 9.8 | 71.2 | 19 | 27.6 | 41.7 | 1.5 | 0.3 | 25.9 | 3 |
| 6013365003 | 29.90 | 59.19 | 55-60% | 4924 | Contra Costa | 11.2 | 79.3 | 9.5 | 20.7 | 14.3 | 34.9 | 0.3 | 24.5 | 5.2 |
| 6065042012 | 29.90 | 59.18 | 55-60% | 6242 | Riverside | 15.4 | 79.6 | 5 | 29.8 | 45.9 | 9.7 | 0.4 | 11 | 3.3 |
| 6029001802 | 29.89 | 59.16 | 55-60% | 5408 | Kern | 13.4 | 73.4 | 13.2 | 27.7 | 57.2 | 7 | 0.9 | 4.7 | 2.5 |
| 6019004506 | 29.87 | 59.15 | 55-60% | 3158 | Fresno | 8.1 | 63.6 | 28.3 | 17.1 | 73.3 | 2.2 | 0.5 | 3.9 | 3 |
| 6037461901 | 29.87 | 59.14 | 55-60% | 5118 | Los Angeles | 15.8 | 78.6 | 5.6 | 67.9 | 12.3 | 11.6 | 0.1 | 6.2 | 1.9 |
| 6013306003 | 29.86 | 59.12 | 55-60% | 4881 | Contra Costa | 13.6 | 72.6 | 13.8 | 36.9 | 45.7 | 9 | 0.6 | 3.7 | 4.1 |
| 6059011200 | 29.85 | 59.11 | 55-60% | 3916 | Orange | 11.9 | 71.5 | 16.6 | 31 | 56.3 | 1.4 | 0.3 | 8.5 | 2.6 |
| 6037265510 | 29.85 | 59.10 | 55-60% | 4234 | Los Angeles | 3.4 | 88.7 | 7.9 | 7 | 47.9 | 2.1 | 0.1 | 38.5 | 4.4 |
| 6037106408 | 29.85 | 59.09 | 55-60% | 3463 | Los Angeles | 19.8 | 76.9 | 3.3 | 86.8 | 4.5 | 3.3 | 0.1 | 4.3 | 1 |
| 6085503304 | 29.84 | 59.07 | 55-60% | 6916 | Santa Clara | 16.2 | 72.6 | 11.2 | 43.9 | 6.2 | 2.7 | 0.1 | 45.2 | 2 |
| 6037403323 | 29.84 | 59.06 | 55-60% | 5356 | Los Angeles | 8.9 | 78.6 | 12.5 | 11.8 | 18.2 | 2.9 | 0.1 | 65.2 | 1.8 |
| 6029006403 | 29.84 | 59.05 | 55-60% | 5824 | Kern | 21.8 | 73.1 | 5.1 | 94.7 | 4.4 | 0.3 | 0.2 | 0.2 | 0.2 |
| 6053000600 | 29.83 | 59.04 | 55-60% | 7143 | Monterey | 21.8 | 73.7 | 4.5 | 96.4 | 2.4 | 0.3 | 0.1 | 0.3 | 0.5 |
| 6065049000 | 29.79 | 59.02 | 55-60% | 8249 | Riverside | 17.1 | 78.2 | 4.7 | 41.5 | 18.5 | 24.2 | 0.2 | 12.6 | 3.1 |
| 6037293302 | 29.77 | 59.01 | 55-60% | 4720 | Los Angeles | 13.7 | 76.4 | 9.9 | 44.7 | 24.3 | 5.7 | 0.1 | 22.8 | 2.5 |
| 6001433000 | 29.76 | 59.00 | 55-60% | 3832 | Alameda | 11.7 | 73 | 15.3 | 28.3 | 35.8 | 8.2 | 0.3 | 24 | 3.3 |
| 6059086303 | 29.76 | 58.99 | 55-60% | 6212 | Orange | 10.8 | 79.2 | 10 | 43.7 | 34.1 | 2.7 | 0.2 | 16.6 | 2.7 |
| 6037461000 | 29.75 | 58.97 | 55-60% | 6243 | Los Angeles | 13.5 | 75.8 | 10.7 | 53.8 | 8.6 | 30.9 | 0.2 | 3.3 | 3.1 |
| 6037106113 | 29.72 | 58.96 | 55-60% | 3493 | Los Angeles | 14.4 | 74 | 11.6 | 76.4 | 15.7 | 2.1 | 0.5 | 4.6 | 0.6 |
| 6019007201 | 29.72 | 58.95 | 55-60% | 7671 | Fresno | 14.8 | 71.5 | 13.7 | 34.9 | 57.4 | 0.2 | 0.6 | 4.8 | 2.1 |
| 6107003601 | 29.72 | 58.94 | 55-60% | 7090 | Tulare | 17.5 | 72.5 | 10 | 54.5 | 36.9 | 0.8 | 1 | 4.8 | 1.8 |
| 6001435601 | 29.72 | 58.92 | 55-60% | 4902 | Alameda | 17 | 75.2 | 7.8 | 57.5 | 17.4 | 12.1 | 0.6 | 9 | 3.4 |
| 6037214902 | 29.71 | 58.91 | 55-60% | 2586 | Los Angeles | 6 | 74.1 | 19.9 | 7.2 | 74.6 | 3 | 0 | 11.7 | 3.5 |
| 6065043313 | 29.71 | 58.90 | 55-60% | 3504 | Riverside | 17.4 | 75.5 | 7.1 | 51.6 | 40.3 | 4.1 | 1.1 | 1.1 | 1.8 |
| 6037189202 | 29.71 | 58.89 | 55-60% | 2718 | Los Angeles | 8.3 | 74.1 | 17.6 | 10 | 73.1 | 1.3 | 0.2 | 11.7 | 3.7 |
| 6059076202 | 29.70 | 58.87 | 55-60% | 5812 | Orange | 13.5 | 76 | 10.5 | 38.6 | 49.3 | 1.9 | 0.5 | 7.8 | 1.9 |
| 6059088401 | 29.69 | 58.86 | 55-60% | 5317 | Orange | 12.5 | 76.8 | 10.7 | 43 | 26.5 | 0.9 | 0.3 | 27.1 | 2.2 |
| 6059021903 | 29.69 | 58.85 | 55-60% | 4034 | Orange | 12.1 | 75 | 12.9 | 29.2 | 48.8 | 1.7 | 0.2 | 17.1 | 3 |
| 6037920337 | 29.69 | 58.83 | 55-60% | 7257 | Los Angeles | 19.7 | 76.7 | 3.6 | 72 | 15.5 | 4 | 0.2 | 6.5 | 1.7 |
| 6037212101 | 29.69 | 58.82 | 55-60% | 2507 | Los Angeles | 9.2 | 83.5 | 7.3 | 29.5 | 9.3 | 6.5 | 0.2 | 52.5 | 2 |
| 6073013307 | 29.69 | 58.81 | 55-60% | 3966 | San Diego | 12.5 | 74 | 13.5 | 71.3 | 13.1 | 4.4 | 0.1 | 9.1 | 2 |
| 6059087002 | 29.68 | 58.80 | 55-60% | 6922 | Orange | 13.8 | 75.5 | 10.7 | 40.1 | 31.5 | 3.8 | 0.3 | 22.3 | 2 |
| 6065043316 | 29.67 | 58.78 | 55-60% | 3713 | Riverside | 8.4 | 43.4 | 48.2 | 15.1 | 67.7 | 7.8 | 0.4 | 6.2 | 2.9 |
| 6037920029 | 29.67 | 58.77 | 55-60% | 3574 | Los Angeles | 12.7 | 79 | 8.3 | 34.5 | 54 | 2.7 | 0.3 | 4.7 | 3.8 |
| 6037109100 | 29.67 | 58.76 | 55-60% | 2492 | Los Angeles | 10.8 | 62.4 | 26.8 | 57.4 | 29.2 | 2.7 | 0.2 | 9.6 | 0.9 |
| 6037103300 | 29.67 | 58.75 | 55-60% | 3819 | Los Angeles | 9.3 | 75.5 | 15.2 | 19.5 | 71 | 0.9 | 0.3 | 5.8 | 2.5 |
| 6089012200 | 29.66 | 58.73 | 55-60% | 5379 | Shasta | 13.1 | 72.7 | 14.2 | 9.8 | 81.9 | 0.3 | 2.2 | 2.2 | 3.4 |
| 6037134201 | 29.66 | 58.72 | 55-60% | 4270 | Los Angeles | 15 | 75.2 | 9.8 | 54.5 | 27.6 | 2.5 | 0.1 | 13.5 | 1.8 |
| 6083002101 | 29.65 | 58.71 | 55-60% | 3873 | Santa Barbara | 19.5 | 72.7 | 7.8 | 62.4 | 31.2 | 1.8 | 0.6 | 1.6 | 2.3 |
| 6059110402 | 29.65 | 58.70 | 55-60% | 5459 | Orange | 15.8 | 75.3 | 8.9 | 54.7 | 21.1 | 3.1 | 0.4 | 18.3 | 2.4 |
| 6001444302 | 29.64 | 58.68 | 55-60% | 4354 | Alameda | 16.7 | 76.4 | 6.9 | 48.3 | 19.1 | 4.6 | 0.6 | 22.9 | 4.5 |
| 6071008601 | 29.64 | 58.67 | 55-60% | 5618 | San Bernardino | 13.6 | 78 | 8.4 | 37.6 | 49.4 | 5.3 | 0.7 | 4 | 3 |
| 6085504418 | 29.63 | 58.66 | 55-60% | 4883 | Santa Clara | 14.5 | 77 | 8.5 | 31.7 | 11.2 | 2.5 | 0.2 | 50.9 | 3.4 |
| 6115040600 | 29.63 | 58.65 | 55-60% | 6130 | Yuba | 16.5 | 73.9 | 9.6 | 37 | 50.2 | 1.6 | 2.3 | 5.5 | 3.5 |
| 6059042201 | 29.63 | 58.63 | 55-60% | 5639 | Orange | 9.7 | 71.5 | 18.8 | 20.1 | 73.9 | 0.5 | 0.4 | 2.6 | 2.5 |
| 6059075806 | 29.56 | 58.62 | 55-60% | 6121 | Orange | 14.4 | 73.2 | 12.4 | 48.1 | 41.5 | 1.4 | 0.2 | 7.2 | 1.6 |
| 6037275302 | 29.55 | 58.61 | 55-60% | 4775 | Los Angeles | 7 | 68.5 | 24.5 | 14.1 | 64.1 | 4.6 | 0.1 | 12.9 | 4.3 |
| 6109001200 | 29.55 | 58.60 | 55-60% | 3678 | Tuolumne | 11.5 | 72.9 | 15.6 | 11 | 81.9 | 0.5 | 1 | 2.5 | 3 |
| 6001422100 | 29.54 | 58.58 | 55-60% | 2685 | Alameda | 11.7 | 77.9 | 10.4 | 28.3 | 36.9 | 15.8 | 0.4 | 12.6 | 6.1 |
| 6013329000 | 29.52 | 58.57 | 55-60% | 6309 | Contra Costa | 11.6 | 78 | 10.4 | 34.2 | 49.8 | 2.7 | 0.3 | 8.8 | 4.2 |
| 6083002103 | 29.51 | 58.56 | 55-60% | 3930 | Santa Barbara | 16.4 | 70.5 | 13.1 | 57.5 | 31.3 | 1.9 | 0.5 | 7.2 | 1.6 |
| 6029000800 | 29.50 | 58.54 | 55-60% | 4925 | Kern | 16.2 | 72 | 11.8 | 57.7 | 34.7 | 2.7 | 0.9 | 1.7 | 2.4 |
| 6037186100 | 29.50 | 58.53 | 55-60% | 4715 | Los Angeles | 10.3 | 74.8 | 14.9 | 35 | 30.3 | 1.4 | 0.2 | 30 | 3.2 |
| 6001401100 | 29.50 | 58.52 | 55-60% | 4156 | Alameda | 7.6 | 86.2 | 6.2 | 12.6 | 46.5 | 23.5 | 0.5 | 10.8 | 6.3 |
| 6037211121 | 29.50 | 58.51 | 55-60% | 2351 | Los Angeles | 9.5 | 80.9 | 9.6 | 45.2 | 8.7 | 4.8 | 0.1 | 38.7 | 2.5 |
| 6099003606 | 29.49 | 58.49 | 55-60% | 10838 | Stanislaus | 16.5 | 77.1 | 6.4 | 26.9 | 55.5 | 1.7 | 0.4 | 12 | 3.5 |
| 6073010014 | 29.49 | 58.48 | 55-60% | 17679 | San Diego | 13.4 | 82.9 | 3.7 | 50.6 | 16.4 | 11.9 | 0.3 | 17.5 | 3.3 |
| 6037405701 | 29.49 | 58.47 | 55-60% | 3853 | Los Angeles | 14.5 | 78.9 | 6.6 | 72.5 | 14 | 2.8 | 0.5 | 9.3 | 1 |
| 6067008913 | 29.48 | 58.46 | 55-60% | 4145 | Sacramento | 13.2 | 71.9 | 14.9 | 14.4 | 70.6 | 5.5 | 0.5 | 5.3 | 3.8 |
| 6037900705 | 29.48 | 58.44 | 55-60% | 4285 | Los Angeles | 14 | 71.5 | 14.5 | 25 | 50 | 18.4 | 0.7 | 2.7 | 3.2 |
| 6095253300 | 29.45 | 58.43 | 55-60% | 2743 | Solano | 12.2 | 75.2 | 12.6 | 43.7 | 51.6 | 0.5 | 0.5 | 1.9 | 1.8 |

| | | | | | | | | | | | | | | | |
|---|---|---|---|---|---|---|---|---|---|---|---|---|---|---|---|
| 6111001206 | 29.45 | 58.42 | 55-60% | 941 | Ventura | 8.8 | 69.1 | 22.1 | 14.3 | 79.2 | 0.3 | 0.4 | 2.3 | 3.4 |
| 6071007105 | 29.45 | 58.41 | 55-60% | 2715 | San Bernardino | 12.4 | 77.5 | 10.1 | 33.3 | 38.5 | 10 | 0.4 | 14.7 | 3.2 |
| 6037216402 | 29.45 | 58.39 | 55-60% | 2615 | Los Angeles | 8 | 71.9 | 20.1 | 5.4 | 77.8 | 3.2 | 0.3 | 6.7 | 6.7 |
| 6067008905 | 29.43 | 58.38 | 55-60% | 4451 | Sacramento | 13.1 | 71.5 | 15.4 | 22.6 | 59.2 | 7 | 1.1 | 6 | 4 |
| 6037920336 | 29.40 | 58.37 | 55-60% | 7027 | Los Angeles | 19.2 | 76.4 | 4.4 | 74.3 | 20.2 | 1.1 | 0.2 | 3 | 1.2 |
| 6037109400 | 29.38 | 58.36 | 55-60% | 3720 | Los Angeles | 11.8 | 74.9 | 13.3 | 75 | 14 | 2.4 | 0.5 | 6.5 | 1.6 |
| 6101050102 | 29.36 | 58.34 | 55-60% | 4559 | Sutter | 16.3 | 66.1 | 17.6 | 34 | 54.6 | 2.5 | 1.3 | 3.8 | 3.7 |
| 6037212501 | 29.36 | 58.33 | 55-60% | 2165 | Los Angeles | 10.8 | 84.1 | 5.1 | 54 | 13.1 | 6 | 0 | 24.8 | 2.2 |
| 6065043703 | 29.36 | 58.32 | 55-60% | 2585 | Riverside | 14 | 66.7 | 19.3 | 32.1 | 60.5 | 1.8 | 1.1 | 1.4 | 3.1 |
| 6059011300 | 29.35 | 58.30 | 55-60% | 4379 | Orange | 8.2 | 77.2 | 14.6 | 20.3 | 60.6 | 2.1 | 0.2 | 14.1 | 2.7 |
| 6067008909 | 29.35 | 58.29 | 55-60% | 2358 | Sacramento | 13 | 71.4 | 15.6 | 24.5 | 50.3 | 9.8 | 0.4 | 10.1 | 4.9 |
| 6001436602 | 29.34 | 58.28 | 55-60% | 4571 | Alameda | 16.6 | 75.9 | 7.5 | 44.3 | 11.1 | 16.3 | 0.3 | 22.2 | 5.8 |
| 6067009105 | 29.34 | 58.27 | 55-60% | 2709 | Sacramento | 12.3 | 78.4 | 9.3 | 19.2 | 52.1 | 13.8 | 0.7 | 8.3 | 5.9 |
| 6059099227 | 29.33 | 58.25 | 55-60% | 5922 | Orange | 12.4 | 76 | 11.6 | 27.2 | 30 | 1.5 | 0 | 39.2 | 2 |
| 6027000800 | 29.31 | 58.24 | 55-60% | 3378 | Inyo | 10.9 | 69.6 | 19.5 | 25.4 | 63.7 | 0.4 | 6.7 | 1.2 | 2.7 |
| 6037115103 | 29.30 | 58.23 | 55-60% | 2776 | Los Angeles | 0.1 | 99.7 | 0.2 | 31.7 | 26.8 | 24.2 | 0.4 | 12.4 | 4.6 |
| 6073005900 | 29.29 | 58.22 | 55-60% | 2821 | San Diego | 2.9 | 83.1 | 14 | 18.9 | 69 | 3.7 | 0.4 | 4.8 | 3.3 |
| 6069000802 | 29.28 | 58.20 | 55-60% | 2534 | San Benito | 12.1 | 75.5 | 12.4 | 32.8 | 64.3 | 0.2 | 0.8 | 0.9 | 1.1 |
| 6001410300 | 29.28 | 58.19 | 55-60% | 3536 | Alameda | 18.8 | 75.3 | 5.9 | 61.8 | 1.9 | 28.1 | 0.4 | 5.9 | 1.8 |
| 6067008703 | 29.28 | 58.18 | 55-60% | 4912 | Sacramento | 9.9 | 71.8 | 18.3 | 7.4 | 65 | 3 | 0.3 | 21 | 3.3 |
| 6037480802 | 29.28 | 58.17 | 55-60% | 3279 | Los Angeles | 11.7 | 72.4 | 15.9 | 54.6 | 8.6 | 0.6 | 0.3 | 35.1 | 0.8 |
| 6031000702 | 29.27 | 58.15 | 55-60% | 4382 | Kings | 14.3 | 74.7 | 11 | 37.4 | 53.7 | 3 | 0.7 | 2 | 3.3 |
| 6037462302 | 29.27 | 58.14 | 55-60% | 2972 | Los Angeles | 8 | 82.9 | 9.1 | 28.5 | 32.3 | 9.2 | 0.1 | 25.7 | 4.1 |
| 6037503201 | 29.27 | 58.13 | 55-60% | 3912 | Los Angeles | 12.6 | 73.6 | 13.8 | 66.9 | 25.7 | 1.2 | 0.2 | 4.4 | 1.6 |
| 6037900703 | 29.24 | 58.12 | 55-60% | 4375 | Los Angeles | 13.3 | 73.6 | 13.1 | 31.9 | 37.1 | 20.3 | 0.5 | 6.4 | 3.9 |
| 6071011300 | 29.24 | 58.10 | 55-60% | 1408 | San Bernardino | 6.4 | 69 | 24.6 | 10.9 | 85 | 0.1 | 0.4 | 1.5 | 2.1 |
| 6081600600 | 29.23 | 58.09 | 55-60% | 5352 | San Mateo | 11.5 | 77.8 | 10.7 | 42.8 | 8.2 | 2.2 | 0.1 | 44.1 | 2.6 |
| 6037550400 | 29.22 | 58.08 | 55-60% | 1534 | Los Angeles | 12.9 | 76.9 | 10.2 | 74.3 | 17.6 | 2.2 | 0.3 | 5.3 | 0.3 |
| 6067004201 | 29.22 | 58.07 | 55-60% | 5290 | Sacramento | 16.3 | 70.8 | 12.9 | 37 | 17.3 | 26.2 | 0.5 | 14.5 | 4.5 |
| 6073009201 | 29.21 | 58.05 | 55-60% | 5014 | San Diego | 25.1 | 68.2 | 6.7 | 23.1 | 39.9 | 15.3 | 0.7 | 14.9 | 6.2 |
| 6037102105 | 29.20 | 58.04 | 55-60% | 1731 | Los Angeles | 11.2 | 79.2 | 9.6 | 65.6 | 23.9 | 0.9 | 0.1 | 8 | 1.5 |
| 6067009010 | 29.20 | 58.03 | 55-60% | 4866 | Sacramento | 15.1 | 81.7 | 3.2 | 20.6 | 41.7 | 13.4 | 0.4 | 17.6 | 6.3 |
| 6059086405 | 29.19 | 58.01 | 55-60% | 6578 | Orange | 18.8 | 75.7 | 5.5 | 81.2 | 12.2 | 1.6 | 0.2 | 3.9 | 0.9 |
| 6059001401 | 29.18 | 58.00 | 55-60% | 5013 | Orange | 14.2 | 72.9 | 12.9 | 57.3 | 35.7 | 1.4 | 0.3 | 3.8 | 1.5 |
| 6037139402 | 29.17 | 57.99 | 55-60% | 2851 | Los Angeles | 12.5 | 69.8 | 17.7 | 5.2 | 84.6 | 1.3 | 0.2 | 4.2 | 4.5 |
| 6073003111 | 29.13 | 57.98 | 55-60% | 6183 | San Diego | 16.4 | 74 | 9.6 | 50.2 | 3.9 | 21.5 | 0.1 | 21.2 | 3.1 |
| 6037117101 | 29.12 | 57.96 | 55-60% | 4796 | Los Angeles | 14.8 | 78.8 | 6.4 | 45.6 | 10.3 | 5.2 | 0.1 | 37 | 1.8 |
| 6095252702 | 29.12 | 57.95 | 55-60% | 6808 | Solano | 13.8 | 77.2 | 9 | 20.3 | 30.6 | 17.7 | 0.5 | 24.1 | 6.8 |
| 6073006100 | 29.10 | 57.94 | 55-60% | 2237 | San Diego | 8.2 | 80.1 | 11.7 | 19.2 | 70.1 | 2.2 | 0.4 | 4.9 | 3.2 |
| 6081600800 | 29.09 | 57.93 | 55-60% | 6768 | San Mateo | 11.6 | 79.9 | 8.5 | 20.7 | 17.3 | 6.8 | 0.1 | 50.5 | 4.6 |
| 6095252501 | 29.09 | 57.91 | 55-60% | 2670 | Solano | 15.1 | 71.9 | 13 | 42.1 | 31.9 | 12.6 | 0.4 | 7.3 | 5.8 |
| 6037404100 | 29.08 | 57.90 | 55-60% | 6445 | Los Angeles | 15.7 | 77.2 | 7.1 | 80.7 | 10.2 | 2.5 | 0.1 | 5.5 | 1 |
| 6037543601 | 29.08 | 57.89 | 55-60% | 3910 | Los Angeles | 11 | 76.1 | 12.9 | 37.2 | 8.5 | 5.8 | 0.2 | 45.9 | 2.4 |
| 6077005001 | 29.07 | 57.88 | 55-60% | 5569 | San Joaquin | 12.5 | 70.3 | 17.2 | 23.4 | 71.2 | 0.8 | 0.5 | 2 | 2 |
| 6075025800 | 29.06 | 57.86 | 55-60% | 1960 | San Francisco | 10.2 | 76.4 | 13.4 | 21.8 | 10.7 | 8 | 0.2 | 56.7 | 2.7 |
| 6111002800 | 29.02 | 57.85 | 55-60% | 6270 | Ventura | 11.8 | 78.1 | 10.1 | 30.6 | 62.6 | 1.2 | 0.6 | 2.4 | 2.6 |
| 6101050403 | 29.02 | 57.84 | 55-60% | 3585 | Sutter | 19.5 | 75.5 | 5 | 26.1 | 54.1 | 2.9 | 0.6 | 11.3 | 4.9 |
| 6037124500 | 29.02 | 57.83 | 55-60% | 2779 | Los Angeles | 9.9 | 77.3 | 12.8 | 22.5 | 63.8 | 3.5 | 0.4 | 6.6 | 3.3 |
| 6085512017 | 29.01 | 57.81 | 55-60% | 7804 | Santa Clara | 15.4 | 75.9 | 8.7 | 46.6 | 15.9 | 3 | 0.3 | 31.4 | 2.7 |
| 6113010800 | 29.00 | 57.80 | 55-60% | 3881 | Yolo | 15.7 | 75.1 | 9.2 | 56.1 | 37.8 | 0.8 | 0.6 | 2.7 | 2.1 |
| 6029006004 | 28.99 | 57.79 | 55-60% | 1601 | Kern | 7.3 | 70.2 | 22.5 | 15.6 | 77.1 | 0.5 | 1.3 | 1.4 | 4.1 |
| 6065042408 | 28.98 | 57.78 | 55-60% | 3152 | Riverside | 15 | 77.4 | 7.6 | 51.8 | 26.9 | 12.2 | 0.5 | 5.3 | 3.4 |
| 6065941500 | 28.98 | 57.76 | 55-60% | 4291 | Riverside | 15.8 | 72.8 | 11.4 | 29.4 | 52.8 | 4.5 | 8.7 | 1.9 | 2.6 |
| 6085503337 | 28.98 | 57.75 | 55-60% | 3772 | Santa Clara | 13.4 | 76.9 | 9.7 | 23.1 | 9 | 3.7 | 0.2 | 61.3 | 2.6 |
| 6037554406 | 28.97 | 57.74 | 55-60% | 4875 | Los Angeles | 11.2 | 75.5 | 13.3 | 26.4 | 39.1 | 11.7 | 0.1 | 19.1 | 3.6 |
| 6067007423 | 28.96 | 57.72 | 55-60% | 5313 | Sacramento | 21.1 | 75.6 | 3.3 | 37.9 | 32.8 | 19.8 | 0.5 | 3.8 | 5.2 |
| 6025011201 | 28.96 | 57.71 | 55-60% | 6043 | Imperial | 17.2 | 75.1 | 7.7 | 76.2 | 19.1 | 1.3 | 0.2 | 2.4 | 0.9 |
| 6037269903 | 28.93 | 57.70 | 55-60% | 3650 | Los Angeles | 7.7 | 88.1 | 4.2 | 29.3 | 32.1 | 10.4 | 0.2 | 24 | 4.1 |
| 6005000304 | 28.93 | 57.69 | 55-60% | 3946 | Amador | 10.6 | 74.2 | 15.2 | 13.4 | 80.9 | 0.2 | 1.6 | 1 | 2.9 |
| 6071000103 | 28.93 | 57.67 | 55-60% | 4740 | San Bernardino | 11.9 | 80.6 | 7.5 | 26.7 | 28.8 | 6 | 0.2 | 35.2 | 3 |
| 6071008901 | 28.93 | 57.66 | 55-60% | 2174 | San Bernardino | 14 | 69.4 | 16.6 | 15.6 | 73.5 | 3.1 | 2.7 | 1.1 | 4 |
| 6073020214 | 28.93 | 57.65 | 55-60% | 5143 | San Diego | 20 | 71 | 9 | 78.3 | 15.9 | 1.7 | 0.5 | 2.6 | 1 |
| 6059011101 | 28.93 | 57.64 | 55-60% | 4140 | Orange | 15.5 | 76.6 | 7.9 | 53 | 33.2 | 2 | 0.1 | 9.5 | 2.1 |
| 6065041702 | 28.93 | 57.62 | 55-60% | 4572 | Riverside | 14.6 | 75.2 | 10.2 | 62.2 | 31.6 | 1.9 | 0.3 | 2.4 | 1.6 |
| 6037189905 | 28.91 | 57.61 | 55-60% | 2304 | Los Angeles | 4.4 | 81.8 | 13.8 | 9.3 | 78.7 | 3.3 | 0.2 | 5.3 | 3.2 |
| 6037101210 | 28.88 | 57.60 | 55-60% | 5990 | Los Angeles | 13.6 | 77.9 | 8.5 | 37 | 48.2 | 3.1 | 0.1 | 7.5 | 4 |

| | | | | | | | | | | | | | | |
|---|---|---|---|---|---|---|---|---|---|---|---|---|---|---|
| 6111000304 | 28.88 | 57.59 | 55-60% | 4777 | Ventura | 17.6 | 74.4 | 8 | 79.1 | 19.3 | 0.2 | 0.2 | 0.4 | 0.8 |
| 6037124400 | 28.88 | 57.57 | 55-60% | 4192 | Los Angeles | 13.9 | 73.4 | 12.7 | 19.6 | 71.1 | 3.3 | 0.2 | 3.5 | 2.3 |
| 6037403317 | 28.87 | 57.56 | 55-60% | 4721 | Los Angeles | 9.5 | 80.6 | 9.9 | 34.5 | 25.1 | 9.3 | 0.1 | 28 | 3 |
| 6067009503 | 28.86 | 57.55 | 55-60% | 3067 | Sacramento | 14 | 69.1 | 16.9 | 43.5 | 50.9 | 0.8 | 0.8 | 1.3 | 2.8 |
| 6073006500 | 28.85 | 57.54 | 55-60% | 2569 | San Diego | 4.3 | 73.5 | 22.2 | 18.6 | 64 | 8.3 | 0.6 | 5.4 | 3 |
| 6037480804 | 28.84 | 57.52 | 55-60% | 4998 | Los Angeles | 11 | 79.2 | 9.8 | 36.8 | 9.3 | 1.4 | 0 | 50.7 | 1.8 |
| 6037301203 | 28.84 | 57.51 | 55-60% | 4368 | Los Angeles | 8.8 | 73 | 18.2 | 8.3 | 69.9 | 0.9 | 0.1 | 17.4 | 3.5 |
| 6037267600 | 28.82 | 57.50 | 55-60% | 2549 | Los Angeles | 7.9 | 77.4 | 14.7 | 23.4 | 43.5 | 2.3 | 0.2 | 26.2 | 4.4 |
| 6099000911 | 28.82 | 57.49 | 55-60% | 4815 | Stanislaus | 13 | 78.6 | 8.4 | 29 | 56.7 | 3.6 | 0.4 | 6 | 4.4 |
| 6085503111 | 28.82 | 57.47 | 55-60% | 5101 | Santa Clara | 15.2 | 76.1 | 8.7 | 47.9 | 5.5 | 1.5 | 0.1 | 43.7 | 1.3 |
| 6029005203 | 28.82 | 57.46 | 55-60% | 4679 | Kern | 8.5 | 62.9 | 28.6 | 7.4 | 86.3 | 0.3 | 2.4 | 0.5 | 3.1 |
| 6075012402 | 28.81 | 57.45 | 55-60% | 3974 | San Francisco | 5.1 | 81.4 | 13.5 | 19.6 | 43.3 | 10.1 | 0.4 | 22.6 | 3.9 |
| 6065040813 | 28.81 | 57.43 | 55-60% | 6080 | Riverside | 13.2 | 77.7 | 9.1 | 29 | 55.8 | 3 | 0.4 | 9.2 | 2.6 |
| 6037123601 | 28.81 | 57.42 | 55-60% | 4995 | Los Angeles | 10.3 | 76.1 | 13.6 | 33.3 | 55.3 | 4.1 | 0.2 | 4.8 | 2.4 |
| 6095252102 | 28.78 | 57.41 | 55-60% | 3874 | Solano | 12.1 | 76.6 | 11.3 | 16.1 | 65.2 | 5.4 | 0.6 | 6.8 | 5.8 |
| 6071002307 | 28.78 | 57.40 | 55-60% | 5085 | San Bernardino | 15.4 | 77.6 | 7 | 76.4 | 11.3 | 6.9 | 0.2 | 3.7 | 1.5 |
| 6037403902 | 28.78 | 57.38 | 55-60% | 4806 | Los Angeles | 10.8 | 73.1 | 16.1 | 41.9 | 44.1 | 2.7 | 0.1 | 8.6 | 2.5 |
| 6037400603 | 28.77 | 57.37 | 55-60% | 5249 | Los Angeles | 14.2 | 78.5 | 7.3 | 46 | 29.6 | 5.4 | 0.2 | 16.1 | 2.6 |
| 6037276100 | 28.77 | 57.36 | 55-60% | 5592 | Los Angeles | 9.5 | 83.1 | 7.4 | 14.4 | 20.1 | 49.4 | 0.2 | 11.3 | 4.6 |
| 6059088702 | 28.75 | 57.35 | 55-60% | 6107 | Orange | 13.7 | 76.2 | 10.1 | 26.7 | 13.7 | 0.7 | 0.1 | 57.1 | 1.9 |
| 6037480302 | 28.75 | 57.33 | 55-60% | 4255 | Los Angeles | 9 | 75.8 | 15.2 | 34.6 | 18.8 | 2.1 | 0.1 | 42.1 | 2.3 |
| 6107001005 | 28.75 | 57.32 | 55-60% | 2733 | Tulare | 14.3 | 71.8 | 13.9 | 27.4 | 63.3 | 0.5 | 0.9 | 5 | 2.9 |
| 6037481711 | 28.74 | 57.31 | 55-60% | 4530 | Los Angeles | 7 | 74.3 | 18.7 | 8.3 | 3.8 | 0.4 | 0 | 86.7 | 0.8 |
| 6037406412 | 28.73 | 57.30 | 55-60% | 2482 | Los Angeles | 10.1 | 73.1 | 16.8 | 48.3 | 28.4 | 3 | 0.3 | 18.9 | 1 |
| 6067007601 | 28.73 | 57.28 | 55-60% | 6416 | Sacramento | 11.8 | 71.1 | 17.1 | 13 | 70.3 | 5.1 | 0.8 | 5.8 | 5 |
| 6111004304 | 28.72 | 57.27 | 55-60% | 6760 | Ventura | 14.9 | 68.1 | 17 | 49.6 | 37 | 5.1 | 0.4 | 5.1 | 2.9 |
| 6077003214 | 28.71 | 57.26 | 55-60% | 3054 | San Joaquin | 11.8 | 78.6 | 9.6 | 27.2 | 43.9 | 6.8 | 0.4 | 16.9 | 4.7 |
| 6077004600 | 28.71 | 57.25 | 55-60% | 5892 | San Joaquin | 12.2 | 70.5 | 17.3 | 27.9 | 65.7 | 0.6 | 0.7 | 3 | 2.2 |
| 6037310900 | 28.70 | 57.23 | 55-60% | 6870 | Los Angeles | 10.8 | 75.8 | 13.4 | 31.9 | 52.8 | 1.5 | 0.3 | 11 | 2.6 |
| 6095252317 | 28.68 | 57.22 | 55-60% | 6823 | Solano | 15.4 | 78.8 | 5.8 | 16.1 | 29.2 | 15.9 | 0.3 | 30.1 | 8.4 |
| 6037106403 | 28.68 | 57.21 | 55-60% | 3825 | Los Angeles | 15 | 77.6 | 7.4 | 88.9 | 7.7 | 1.2 | 0.1 | 1.3 | 0.8 |
| 6037131900 | 28.68 | 57.20 | 55-60% | 4210 | Los Angeles | 11.7 | 78.7 | 9.6 | 48.6 | 36.8 | 2.9 | 0.3 | 9.1 | 2.3 |
| 6037401311 | 28.66 | 57.18 | 55-60% | 6521 | Los Angeles | 11.2 | 77.6 | 11.2 | 35.4 | 49.3 | 4.7 | 0.5 | 7.3 | 2.9 |
| 6047001101 | 28.65 | 57.17 | 55-60% | 5880 | Merced | 14.7 | 74 | 11.3 | 34.5 | 48.9 | 4.3 | 0.7 | 8.3 | 3.2 |
| 6077003108 | 28.65 | 57.16 | 55-60% | 4450 | San Joaquin | 15.5 | 74.8 | 9.7 | 29.3 | 45.8 | 10.5 | 0.4 | 9 | 5 |
| 6037463102 | 28.64 | 57.14 | 55-60% | 3779 | Los Angeles | 11.8 | 71.3 | 16.9 | 34.9 | 33.6 | 2.1 | 0.1 | 26.6 | 2.8 |
| 6037900507 | 28.64 | 57.13 | 55-60% | 7669 | Los Angeles | 18.8 | 74.5 | 6.7 | 45.3 | 26.5 | 21.8 | 0.3 | 3.1 | 3.2 |
| 6067001700 | 28.62 | 57.12 | 55-60% | 4794 | Sacramento | 8 | 74.1 | 17.9 | 15.1 | 64.9 | 6.1 | 0.4 | 8.5 | 5 |
| 6037311000 | 28.62 | 57.11 | 55-60% | 3755 | Los Angeles | 10.6 | 78.3 | 11.1 | 32.2 | 51.2 | 1.8 | 0.2 | 12 | 2.6 |
| 6065043702 | 28.61 | 57.09 | 55-60% | 4235 | Riverside | 12 | 68.9 | 19.1 | 27.7 | 64.3 | 1.9 | 1.1 | 2.3 | 2.7 |
| 6037197410 | 28.61 | 57.08 | 55-60% | 3704 | Los Angeles | 9.4 | 79.1 | 11.5 | 37.8 | 46.2 | 2.1 | 0.2 | 10.4 | 3.2 |
| 6071010015 | 28.59 | 57.07 | 55-60% | 5434 | San Bernardino | 15.1 | 74.7 | 10.2 | 52.6 | 40.4 | 3.4 | 0.3 | 1.5 | 1.8 |
| 6037408005 | 28.59 | 57.06 | 55-60% | 5088 | Los Angeles | 11.5 | 75.2 | 13.3 | 37.5 | 20.2 | 4.6 | 0.1 | 34.8 | 2.8 |
| 6037651001 | 28.59 | 57.04 | 55-60% | 5522 | Los Angeles | 11.3 | 73.2 | 15.5 | 23.3 | 41.4 | 2.7 | 0.2 | 28 | 4.4 |
| 6073011902 | 28.57 | 57.03 | 55-60% | 5246 | San Diego | 11.8 | 71.3 | 16.9 | 55.9 | 10.4 | 5.1 | 0.2 | 25.9 | 2.6 |
| 6037555104 | 28.55 | 57.02 | 55-60% | 4239 | Los Angeles | 13.4 | 76.8 | 9.8 | 46.4 | 17.6 | 5 | 0.3 | 29 | 1.8 |
| 6065043509 | 28.54 | 57.01 | 55-60% | 5117 | Riverside | 16.6 | 70.7 | 12.7 | 50.9 | 40.1 | 4.3 | 0.7 | 2.1 | 2 |
| 6067008129 | 28.52 | 56.99 | 55-60% | 3358 | Sacramento | 13.5 | 72 | 14.5 | 19.1 | 69.4 | 3.2 | 0.7 | 3.1 | 4.5 |
| 6075980501 | 28.51 | 56.98 | 55-60% | 797 | San Francisco | 9.4 | 60.6 | 30 | 19.1 | 4.8 | 11.9 | 0 | 62.1 | 2.1 |
| 6073002202 | 28.51 | 56.97 | 55-60% | 4859 | San Diego | 16.9 | 72.7 | 10.4 | 61.2 | 8.1 | 6.7 | 0.3 | 22.1 | 1.6 |
| 6065051300 | 28.50 | 56.96 | 55-60% | 8371 | Riverside | 14.1 | 67 | 18.9 | 38.4 | 50.2 | 5.1 | 0.5 | 3.2 | 2.6 |
| 6073013312 | 28.50 | 56.94 | 55-60% | 2853 | San Diego | 16.2 | 74.7 | 9.1 | 69.8 | 17.6 | 2.8 | 0.2 | 6 | 3.6 |
| 6001440333 | 28.50 | 56.93 | 55-60% | 2839 | Alameda | 10.4 | 79.7 | 9.9 | 7.9 | 9.7 | 5.6 | 0 | 72.3 | 4.5 |
| 6059099410 | 28.49 | 56.92 | 55-60% | 4101 | Orange | 12.3 | 78.2 | 9.5 | 26.7 | 48.2 | 2 | 0.3 | 18.4 | 4.3 |
| 6077005004 | 28.48 | 56.91 | 55-60% | 5702 | San Joaquin | 14.5 | 77 | 8.5 | 23 | 68.3 | 1.8 | 0.3 | 3.3 | 3.3 |
| 6071010804 | 28.48 | 56.89 | 55-60% | 2947 | San Bernardino | 9.7 | 77.3 | 13 | 17.7 | 75.6 | 1 | 1.2 | 0.9 | 3.7 |
| 6037117102 | 28.47 | 56.88 | 55-60% | 2631 | Los Angeles | 11.8 | 77.2 | 11 | 58.7 | 21.7 | 4.2 | 0.1 | 13.4 | 1.9 |
| 6067009618 | 28.47 | 56.87 | 55-60% | 4642 | Sacramento | 14.6 | 78 | 7.4 | 22.8 | 30.8 | 13.7 | 0.3 | 25.8 | 6.6 |
| 6013336101 | 28.46 | 56.85 | 55-60% | 4802 | Contra Costa | 19.4 | 77.3 | 3.3 | 69.7 | 13.1 | 6.9 | 0.2 | 7.7 | 2.4 |
| 6059088701 | 28.46 | 56.84 | 55-60% | 6067 | Orange | 15.4 | 74.6 | 10 | 34.2 | 17.6 | 1.4 | 0.2 | 44.5 | 2.1 |
| 6059075805 | 28.46 | 56.83 | 55-60% | 4213 | Orange | 14.2 | 77.8 | 8 | 48.9 | 43.7 | 0.9 | 0.2 | 4.7 | 1.5 |
| 6037553300 | 28.45 | 56.82 | 55-60% | 3390 | Los Angeles | 12.2 | 76.3 | 11.5 | 59.2 | 19.8 | 6.7 | 0.2 | 12.5 | 1.6 |
| 6085504410 | 28.43 | 56.80 | 55-60% | 4431 | Santa Clara | 13.5 | 74.8 | 11.7 | 21.5 | 12.8 | 3.2 | 0.2 | 60 | 2.3 |
| 6083002404 | 28.40 | 56.79 | 55-60% | 7800 | Santa Barbara | 23.7 | 72.6 | 3.7 | 89.5 | 6 | 0.6 | 0.2 | 2.9 | 0.7 |
| 6001437600 | 28.39 | 56.78 | 55-60% | 3217 | Alameda | 13.9 | 68 | 18.1 | 43.6 | 17.8 | 8.6 | 0.3 | 25.5 | 4.2 |
| 6037405400 | 28.38 | 56.77 | 55-60% | 4795 | Los Angeles | 14.1 | 75.6 | 10.3 | 71.7 | 17.2 | 2.4 | 0 | 7.3 | 1.4 |

| | | | | | | | | | | | | | | |
|---|---|---|---|---|---|---|---|---|---|---|---|---|---|---|
| 6037650605 | 28.37 | 56.75 | 55-60% | 2763 | Los Angeles | 11.8 | 76.9 | 11.3 | 8.8 | 34.2 | 3.7 | 0.1 | 49 | 4.2 |
| 6085504001 | 28.36 | 56.74 | 55-60% | 6017 | Santa Clara | 17.8 | 75 | 7.2 | 71.4 | 6.7 | 2 | 0.2 | 18.2 | 1.5 |
| 6103001000 | 28.34 | 56.73 | 55-60% | 7175 | Tehama | 15 | 70.9 | 14.1 | 35.1 | 60.1 | 0.4 | 1.6 | 0.8 | 2 |
| 6001438300 | 28.34 | 56.72 | 55-60% | 3731 | Alameda | 13.8 | 75.4 | 10.8 | 44.3 | 8.4 | 7.1 | 0.2 | 35.1 | 4.9 |
| 6037111400 | 28.33 | 56.70 | 55-60% | 7560 | Los Angeles | 11 | 74.2 | 14.8 | 32.1 | 41.3 | 3.3 | 0.1 | 20.5 | 2.7 |
| 6107001502 | 28.33 | 56.69 | 55-60% | 5918 | Tulare | 17.2 | 72.1 | 10.7 | 49.2 | 47 | 0.6 | 0.7 | 1.1 | 1.4 |
| 6029003303 | 28.32 | 56.68 | 55-60% | 1471 | Kern | 11.9 | 77 | 11.1 | 18.6 | 76.1 | 0.1 | 1.7 | 1.3 | 2.2 |
| 6067008911 | 28.32 | 56.67 | 55-60% | 2295 | Sacramento | 19.5 | 72 | 8.5 | 31.9 | 37.5 | 18.7 | 0.6 | 5.4 | 6 |
| 6037135102 | 28.31 | 56.65 | 55-60% | 3513 | Los Angeles | 9.7 | 72 | 18.3 | 17.5 | 64.3 | 3.4 | 0.2 | 10.6 | 3.9 |
| 6107002007 | 28.30 | 56.64 | 55-60% | 8185 | Tulare | 17.1 | 70.8 | 12.1 | 37.6 | 51.3 | 1.5 | 0.8 | 6.4 | 2.4 |
| 6065046404 | 28.29 | 56.63 | 55-60% | 5590 | Riverside | 17.8 | 75.1 | 7.1 | 42.2 | 45.1 | 4.6 | 0.9 | 4.6 | 2.6 |
| 6071009906 | 28.29 | 56.61 | 55-60% | 4941 | San Bernardino | 15.2 | 76.8 | 8 | 45.7 | 31.9 | 15.3 | 0.3 | 3.8 | 3 |
| 6099000907 | 28.28 | 56.60 | 55-60% | 3200 | Stanislaus | 10.2 | 67.7 | 22.1 | 17.4 | 74.9 | 1.1 | 0.7 | 2.5 | 3.3 |
| 6029005506 | 28.26 | 56.59 | 55-60% | 5998 | Kern | 12.7 | 75.9 | 11.4 | 30.4 | 59.5 | 3.4 | 1 | 2.4 | 3.3 |
| 6037403801 | 28.26 | 56.58 | 55-60% | 6212 | Los Angeles | 12.6 | 79 | 8.4 | 50.1 | 28.3 | 4.3 | 0.3 | 14.9 | 2 |
| 6059099242 | 28.26 | 56.56 | 55-60% | 3584 | Orange | 13.2 | 75.8 | 11 | 31.5 | 44.8 | 0.9 | 0.3 | 19.4 | 3.2 |
| 6111000600 | 28.25 | 56.55 | 55-60% | 6141 | Ventura | 19.5 | 72.3 | 8.2 | 89.4 | 8.6 | 0.4 | 0.3 | 0.7 | 0.6 |
| 6037106603 | 28.24 | 56.54 | 55-60% | 2979 | Los Angeles | 9.2 | 74.7 | 16.1 | 15.9 | 55.8 | 3.2 | 0.2 | 20 | 4.8 |
| 6081601601 | 28.24 | 56.53 | 55-60% | 2893 | San Mateo | 10.2 | 74 | 15.8 | 33.8 | 26.3 | 2.4 | 0.1 | 33.6 | 3.9 |
| 6085512401 | 28.24 | 56.51 | 55-60% | 4782 | Santa Clara | 12.5 | 74.6 | 12.9 | 43.1 | 47.7 | 0.6 | 0.4 | 6.1 | 2 |
| 6059087105 | 28.23 | 56.50 | 55-60% | 4635 | Orange | 13.8 | 73.8 | 12.4 | 46.9 | 25.9 | 2.9 | 0.5 | 21.8 | 2 |
| 6071010017 | 28.22 | 56.49 | 55-60% | 14798 | San Bernardino | 17 | 76.5 | 6.5 | 44.9 | 42.5 | 6.3 | 0.5 | 3.9 | 1.9 |
| 6073002710 | 28.21 | 56.48 | 55-60% | 4228 | San Diego | 19.3 | 73.6 | 7.1 | 38.2 | 7.8 | 23.2 | 0.3 | 28.2 | 2.4 |
| 6001433102 | 28.21 | 56.46 | 55-60% | 3989 | Alameda | 11.5 | 75.8 | 12.7 | 28.6 | 21.9 | 9 | 0.1 | 37.9 | 2.6 |
| 6023010901 | 28.20 | 56.45 | 55-60% | 4533 | Humboldt | 15.2 | 66.3 | 18.5 | 21.8 | 70.7 | 0.3 | 2.5 | 1.4 | 3.3 |
| 6073010015 | 28.20 | 56.44 | 55-60% | 2803 | San Diego | 17.2 | 76.7 | 6.1 | 82.9 | 4.9 | 2.4 | 0.2 | 7.9 | 1.7 |
| 6001433600 | 28.20 | 56.43 | 55-60% | 5978 | Alameda | 11.9 | 74.6 | 13.5 | 23.3 | 25.5 | 9.1 | 0.1 | 38.8 | 3.1 |
| 6037206020 | 28.18 | 56.41 | 55-60% | 7883 | Los Angeles | 0.1 | 98.7 | 1.2 | 38.3 | 20.5 | 36.5 | 0.1 | 3.8 | 0.9 |
| 6037403600 | 28.18 | 56.40 | 55-60% | 6672 | Los Angeles | 10.8 | 73.2 | 16 | 44.1 | 37.5 | 3.3 | 0.3 | 13 | 1.9 |
| 6075011700 | 28.18 | 56.39 | 55-60% | 1783 | San Francisco | 4.2 | 80.9 | 14.9 | 9.6 | 34.7 | 5.9 | 0.5 | 46.6 | 2.8 |
| 6085503703 | 28.18 | 56.38 | 55-60% | 4271 | Santa Clara | 17.3 | 76.5 | 6.2 | 73.4 | 1.8 | 2.1 | 0.2 | 22 | 0.6 |
| 6037920030 | 28.17 | 56.36 | 55-60% | 5818 | Los Angeles | 15 | 81.1 | 3.9 | 31.2 | 49.1 | 5 | 0.1 | 10.6 | 4 |
| 6115040700 | 28.17 | 56.35 | 55-60% | 10879 | Yuba | 21.4 | 73.6 | 5 | 25.4 | 55.5 | 4.8 | 0.9 | 8.5 | 4.9 |
| 6085504802 | 28.16 | 56.34 | 55-60% | 5242 | Santa Clara | 12.4 | 76.2 | 11.4 | 25 | 26.4 | 1.6 | 0.5 | 42.6 | 3.8 |
| 6077005403 | 28.16 | 56.32 | 55-60% | 5875 | San Joaquin | 14.6 | 79.1 | 6.3 | 35.7 | 45.1 | 6.9 | 0.3 | 8 | 3.9 |
| 6065045704 | 28.16 | 56.31 | 55-60% | 2804 | Riverside | 18.8 | 71.7 | 9.5 | 98.3 | 1.1 | 0.1 | 0.3 | 0 | 0.1 |
| 6001437500 | 28.15 | 56.30 | 55-60% | 4528 | Alameda | 19.6 | 73.1 | 7.3 | 59.7 | 10.9 | 8.2 | 0.2 | 17.2 | 3.7 |
| 6071002034 | 28.15 | 56.29 | 55-60% | 13758 | San Bernardino | 15.2 | 80 | 4.8 | 33.9 | 31.9 | 10.9 | 0.2 | 19.8 | 3.3 |
| 6073015301 | 28.14 | 56.27 | 55-60% | 3179 | San Diego | 15.7 | 75.1 | 9.2 | 30.5 | 53.9 | 4.2 | 0.7 | 6.3 | 4.3 |
| 6077005208 | 28.14 | 56.26 | 55-60% | 5784 | San Joaquin | 14 | 80.1 | 5.9 | 29.9 | 46.4 | 6.7 | 0.6 | 11.8 | 4.6 |
| 6037271901 | 28.14 | 56.25 | 55-60% | 3087 | Los Angeles | 10.4 | 79.3 | 10.3 | 28.2 | 44.2 | 7.1 | 0.1 | 16.7 | 3.8 |
| 6059076205 | 28.13 | 56.24 | 55-60% | 6847 | Orange | 8.9 | 82.2 | 8.9 | 35.1 | 53.6 | 1.2 | 0.4 | 6.9 | 2.8 |
| 6037111201 | 28.13 | 56.22 | 55-60% | 3410 | Los Angeles | 9.3 | 74.7 | 16 | 29.2 | 49.9 | 2.7 | 0.1 | 14.7 | 3.3 |
| 6037400304 | 28.12 | 56.21 | 55-60% | 6714 | Los Angeles | 11.1 | 76.1 | 12.8 | 33.1 | 51.9 | 3.1 | 0.3 | 8.8 | 2.8 |
| 6083002403 | 28.12 | 56.20 | 55-60% | 6811 | Santa Barbara | 23 | 72.9 | 4.1 | 91.7 | 5.1 | 0.6 | 0.4 | 1.3 | 0.9 |
| 6065040611 | 28.12 | 56.19 | 55-60% | 7640 | Riverside | 19.7 | 76.3 | 4 | 37.9 | 24 | 8.9 | 0.2 | 26.2 | 2.9 |
| 6067002900 | 28.11 | 56.17 | 55-60% | 4499 | Sacramento | 11.2 | 75.4 | 13.4 | 23.9 | 59.7 | 4.7 | 0.6 | 6.5 | 4.7 |
| 6067009320 | 28.11 | 56.16 | 55-60% | 4336 | Sacramento | 17.1 | 73.4 | 9.5 | 25.7 | 21.2 | 16.5 | 0.4 | 31.3 | 4.9 |
| 6029000903 | 28.11 | 56.15 | 55-60% | 3653 | Kern | 14.5 | 68.4 | 17.1 | 44.6 | 46.9 | 3.7 | 1.2 | 1.5 | 2.1 |
| 6037900606 | 28.11 | 56.14 | 55-60% | 3721 | Los Angeles | 19.1 | 74 | 6.9 | 42.1 | 23.4 | 30 | 0.7 | 1.3 | 2.5 |
| 6029000904 | 28.11 | 56.12 | 55-60% | 4008 | Kern | 15.4 | 70.6 | 14 | 55.7 | 36.2 | 2.9 | 0.5 | 3 | 1.6 |
| 6037141303 | 28.10 | 56.11 | 55-60% | 3089 | Los Angeles | 8.2 | 78.6 | 13.2 | 13.3 | 70 | 5.6 | 0.1 | 7.7 | 3.4 |
| 6065040604 | 28.10 | 56.10 | 55-60% | 5541 | Riverside | 13.1 | 79.1 | 7.8 | 50.9 | 43.2 | 1.2 | 0.6 | 1.6 | 2.5 |
| 6037195902 | 28.10 | 56.09 | 55-60% | 1905 | Los Angeles | 6.6 | 84.9 | 8.5 | 30.7 | 48.9 | 2.4 | 0.2 | 14.2 | 3.6 |
| 6037109700 | 28.10 | 56.07 | 55-60% | 4493 | Los Angeles | 12.1 | 74.7 | 13.2 | 42.1 | 35.3 | 2.7 | 0.3 | 16.9 | 2.7 |
| 6065040302 | 28.09 | 56.06 | 55-60% | 7308 | Riverside | 12.9 | 78.3 | 8.8 | 48.8 | 38.6 | 5 | 0.4 | 5.2 | 2.1 |
| 6059074006 | 28.08 | 56.05 | 55-60% | 5555 | Orange | 15.5 | 80.4 | 4.1 | 66.9 | 16.9 | 2.6 | 0 | 12.2 | 1.4 |
| 6059075003 | 28.08 | 56.03 | 55-60% | 7408 | Orange | 24.7 | 73.6 | 1.7 | 95.6 | 3.2 | 0.4 | 0.2 | 0.3 | 0.4 |
| 6097151402 | 28.07 | 56.02 | 55-60% | 9177 | Sonoma | 17 | 75.1 | 7.9 | 49.4 | 38.9 | 2.5 | 1.1 | 5.1 | 2.9 |
| 6077003203 | 28.05 | 56.01 | 55-60% | 3519 | San Joaquin | 11.1 | 69 | 19.9 | 21.6 | 63.3 | 5.3 | 0.8 | 5.6 | 3.4 |
| 6071007410 | 28.05 | 56.00 | 55-60% | 5519 | San Bernardino | 16.9 | 67.8 | 15.3 | 40.5 | 31.8 | 18 | 0.4 | 6 | 3.3 |
| 6073004501 | 28.04 | 55.98 | 55-60% | 2875 | San Diego | 10.7 | 84.9 | 4.4 | 50.6 | 40.6 | 3.4 | 0.2 | 3 | 2.1 |
| 6059075512 | 28.04 | 55.97 | 55-60% | 3548 | Orange | 15.4 | 78 | 6.6 | 57.4 | 19.8 | 2.1 | 0.2 | 18.2 | 2.4 |
| 6037910201 | 28.04 | 55.96 | 55-60% | 3549 | Los Angeles | 14.1 | 73.1 | 12.8 | 47.7 | 35.1 | 10.6 | 0.5 | 3.7 | 2.3 |
| 6085500901 | 28.03 | 55.95 | 55-60% | 3723 | Santa Clara | 4.7 | 87.3 | 8 | 19.7 | 36.8 | 6.5 | 0.3 | 33.5 | 3.3 |
| 6059076102 | 28.02 | 55.93 | 55-60% | 7487 | Orange | 7.7 | 83.4 | 8.9 | 50.6 | 25.2 | 4.4 | 0.2 | 18.4 | 1.2 |

| | | | | | | | | | | | | | | | |
|---|---|---|---|---|---|---|---|---|---|---|---|---|---|---|---|
| 6031000601 | 28.02 | 55.92 | 55-60% | 10021 | Kings | 19.3 | 74.1 | 6.6 | 33.1 | 50.5 | 3.9 | 0.5 | 8.5 | 3.5 |
| 6059110003 | 28.02 | 55.91 | 55-60% | 3194 | Orange | 11 | 72.2 | 16.8 | 17.4 | 65.3 | 0.8 | 0.2 | 12.6 | 3.6 |
| 6073008800 | 27.99 | 55.90 | 55-60% | 6188 | San Diego | 13.6 | 75.2 | 11.2 | 29.1 | 17.5 | 7.3 | 0.1 | 43.1 | 2.9 |
| 6073010107 | 27.99 | 55.88 | 55-60% | 6498 | San Diego | 13.5 | 75.8 | 10.7 | 72.1 | 12.4 | 2.7 | 0.1 | 10.7 | 1.9 |
| 6085503508 | 27.98 | 55.87 | 55-60% | 6219 | Santa Clara | 17 | 75.5 | 7.5 | 75.1 | 6.1 | 1.6 | 0.3 | 15.7 | 1.2 |
| 6077003208 | 27.98 | 55.86 | 55-60% | 12534 | San Joaquin | 16.1 | 74.9 | 9 | 23.1 | 29.3 | 9 | 0.2 | 34.7 | 3.7 |
| 6071011401 | 27.97 | 55.85 | 55-60% | 4394 | San Bernardino | 13.4 | 73.8 | 12.8 | 27.3 | 67.5 | 0.7 | 0.9 | 1.1 | 2.6 |
| 6059110010 | 27.96 | 55.83 | 55-60% | 4526 | Orange | 10.7 | 74.8 | 14.5 | 16.3 | 54.9 | 1.2 | 0.2 | 24.2 | 3.1 |
| 6059063904 | 27.95 | 55.82 | 55-60% | 4658 | Orange | 13.7 | 74.2 | 12.1 | 44.4 | 40 | 0.9 | 0.2 | 12.7 | 1.7 |
| 6071012001 | 27.95 | 55.81 | 55-60% | 5612 | San Bernardino | 16.1 | 72.8 | 11.1 | 38.2 | 36.1 | 13 | 0.7 | 8 | 4 |
| 6067009103 | 27.94 | 55.80 | 55-60% | 3495 | Sacramento | 12.9 | 78.5 | 8.6 | 17.3 | 52 | 12.9 | 0.8 | 10.8 | 6.3 |
| 6065044103 | 27.92 | 55.78 | 55-60% | 5669 | Riverside | 11.8 | 61.8 | 26.4 | 33.9 | 51 | 4.9 | 1.4 | 6.1 | 2.7 |
| 6037272301 | 27.91 | 55.77 | 55-60% | 2941 | Los Angeles | 8.9 | 77.7 | 13.4 | 31 | 48.4 | 4.9 | 0.1 | 11.9 | 3.8 |
| 6111005003 | 27.90 | 55.76 | 55-60% | 8366 | Ventura | 17.4 | 74.2 | 8.4 | 87.4 | 9.5 | 0.8 | 0.4 | 1.2 | 0.7 |
| 6053014107 | 27.90 | 55.74 | 55-60% | 7088 | Monterey | 23.5 | 73.7 | 2.8 | 18.5 | 57.5 | 6.2 | 0.3 | 10.7 | 6.9 |
| 6061020908 | 27.90 | 55.73 | 55-60% | 6706 | Placer | 14 | 76.5 | 9.5 | 29.1 | 61.5 | 1.5 | 0.6 | 4.4 | 2.8 |
| 6059099509 | 27.90 | 55.72 | 55-60% | 3491 | Orange | 0.2 | 17.4 | 82.4 | 5.8 | 81.8 | 0.6 | 0.1 | 11 | 0.7 |
| 6001438201 | 27.89 | 55.71 | 55-60% | 4540 | Alameda | 13.2 | 76.3 | 10.5 | 51.5 | 16.3 | 6 | 0.5 | 22.4 | 3.4 |
| 6037125502 | 27.88 | 55.69 | 55-60% | 3083 | Los Angeles | 6.1 | 87.4 | 6.5 | 16 | 63.3 | 7.9 | 0.3 | 8.3 | 4.2 |
| 6073020021 | 27.88 | 55.68 | 55-60% | 6423 | San Diego | 19.3 | 77 | 3.7 | 61 | 21.8 | 2.2 | 0.2 | 11.7 | 3.1 |
| 6073003208 | 27.87 | 55.67 | 55-60% | 6619 | San Diego | 14 | 77.8 | 8.2 | 31.9 | 10.3 | 16.7 | 0.1 | 36.7 | 4.3 |
| 6065042731 | 27.87 | 55.66 | 55-60% | 5768 | Riverside | 17.3 | 68.4 | 14.3 | 54.9 | 32.5 | 6.9 | 0.3 | 3.5 | 1.9 |
| 6059001902 | 27.86 | 55.64 | 55-60% | 2967 | Orange | 11.8 | 78 | 10.2 | 44 | 37.4 | 1.6 | 0.1 | 14.6 | 2.3 |
| 6081610203 | 27.86 | 55.63 | 55-60% | 3436 | San Mateo | 18.5 | 77.6 | 3.9 | 84.2 | 9.1 | 1.9 | 0.1 | 3.3 | 1.4 |
| 6065043508 | 27.86 | 55.62 | 55-60% | 7014 | Riverside | 14.6 | 68.7 | 16.7 | 36.1 | 53.9 | 4.2 | 1.2 | 1.9 | 2.7 |
| 6057000502 | 27.84 | 55.61 | 55-60% | 4664 | Nevada | 10.9 | 69.8 | 19.3 | 8.4 | 85.9 | 0.2 | 1.2 | 1.7 | 2.7 |
| 6037405800 | 27.84 | 55.59 | 55-60% | 5881 | Los Angeles | 14.4 | 76.3 | 9.3 | 65.7 | 19.5 | 3.5 | 0.4 | 8.9 | 2 |
| 6065043601 | 27.84 | 55.58 | 55-60% | 4505 | Riverside | 17.7 | 73.7 | 8.6 | 66 | 25.1 | 4.2 | 1.5 | 1.1 | 2.1 |
| 6071009110 | 27.82 | 55.57 | 55-60% | 15578 | San Bernardino | 20.2 | 74.5 | 5.3 | 48.9 | 23 | 18.7 | 0.4 | 5.3 | 3.7 |
| 6073018504 | 27.82 | 55.56 | 55-60% | 6631 | San Diego | 11.4 | 74.5 | 14.1 | 20 | 67.4 | 3.6 | 0.4 | 4.8 | 3.7 |
| 6013304002 | 27.82 | 55.54 | 55-60% | 1426 | Contra Costa | 13.8 | 76 | 10.2 | 38.9 | 52.7 | 4.6 | 0.4 | 1.1 | 2.5 |
| 6037501802 | 27.81 | 55.53 | 55-60% | 3326 | Los Angeles | 13.6 | 74.6 | 11.8 | 63.6 | 30.9 | 1.1 | 0.3 | 2.7 | 1.4 |
| 6073002401 | 27.81 | 55.52 | 55-60% | 4573 | San Diego | 16.6 | 78.5 | 4.9 | 60.6 | 17.5 | 10.9 | 0.4 | 8 | 2.6 |
| 6037601301 | 27.80 | 55.51 | 55-60% | 1915 | Los Angeles | 10.2 | 77.2 | 12.6 | 19.6 | 14.4 | 57.8 | 0.2 | 3.7 | 4.2 |
| 6019005701 | 27.79 | 55.49 | 55-60% | 3697 | Fresno | 14.5 | 74 | 11.5 | 32.1 | 56.2 | 1.8 | 1.9 | 4.9 | 3 |
| 6085505203 | 27.78 | 55.48 | 55-60% | 4809 | Santa Clara | 7.6 | 89.4 | 3 | 21.1 | 49.8 | 3.1 | 0.1 | 20.8 | 5.1 |
| 6019005405 | 27.78 | 55.47 | 55-60% | 4145 | Fresno | 10 | 68.3 | 21.7 | 27 | 57.8 | 4.4 | 0.7 | 7.5 | 2.6 |
| 6065042741 | 27.77 | 55.45 | 55-60% | 2142 | Riverside | 0.2 | 27.5 | 72.3 | 10.5 | 78.6 | 6.6 | 0.7 | 1.7 | 1.9 |
| 6097151401 | 27.77 | 55.44 | 55-60% | 7306 | Sonoma | 18.2 | 76.9 | 4.9 | 51 | 35.4 | 2.8 | 0.9 | 7 | 2.9 |
| 6059088107 | 27.76 | 55.43 | 55-60% | 5866 | Orange | 12.5 | 74.8 | 12.7 | 24 | 17.7 | 0.9 | 0.2 | 54.9 | 2.3 |
| 6019004210 | 27.75 | 55.42 | 55-60% | 3480 | Fresno | 15.4 | 79.1 | 5.5 | 34.5 | 44.1 | 7.2 | 0.7 | 10.1 | 3.6 |
| 6073021100 | 27.75 | 55.40 | 55-60% | 7589 | San Diego | 12.4 | 74.3 | 13.3 | 35.3 | 54.5 | 2.3 | 4.1 | 1.1 | 2.7 |
| 6001423100 | 27.74 | 55.39 | 55-60% | 3964 | Alameda | 9.6 | 75.3 | 15.1 | 16.2 | 47.8 | 17.5 | 0.4 | 13.3 | 4.9 |
| 6037119341 | 27.74 | 55.38 | 55-60% | 2719 | Los Angeles | 12.1 | 78.9 | 9 | 54.6 | 9.6 | 3.5 | 0 | 30.4 | 1.9 |
| 6067007402 | 27.73 | 55.37 | 55-60% | 6180 | Sacramento | 14.5 | 72.3 | 13.2 | 26.6 | 55.8 | 7 | 0.7 | 5 | 4.9 |
| 6001440308 | 27.73 | 55.35 | 55-60% | 5883 | Alameda | 11.2 | 71.4 | 17.4 | 32.3 | 15.4 | 4.9 | 0.2 | 42.9 | 4.4 |
| 6037192410 | 27.73 | 55.34 | 55-60% | 3628 | Los Angeles | 9.6 | 79.1 | 11.3 | 25 | 45.3 | 3.2 | 0.1 | 23.4 | 3 |
| 6111005205 | 27.73 | 55.33 | 55-60% | 5767 | Ventura | 9.1 | 69.5 | 21.4 | 16.9 | 70.1 | 1.3 | 0.2 | 9 | 2.5 |
| 6037143604 | 27.72 | 55.32 | 55-60% | 3205 | Los Angeles | 4.5 | 89.2 | 6.3 | 12.9 | 61.3 | 9.2 | 0.4 | 11.9 | 4.4 |
| 6071007904 | 27.72 | 55.30 | 55-60% | 6697 | San Bernardino | 15 | 78.8 | 6.2 | 31.9 | 49.3 | 6.1 | 0.3 | 9.4 | 3 |
| 6025012302 | 27.72 | 55.29 | 55-60% | 4756 | Imperial | 17.4 | 68.3 | 14.3 | 65.7 | 28.7 | 1.7 | 1.2 | 1.1 | 1.6 |
| 6001440307 | 27.71 | 55.28 | 55-60% | 4219 | Alameda | 9.2 | 70.4 | 20.4 | 20.8 | 25.7 | 7 | 0.2 | 41.9 | 4.5 |
| 6099003905 | 27.71 | 55.27 | 55-60% | 3871 | Stanislaus | 12.1 | 71.4 | 16.5 | 15.9 | 79.2 | 0.6 | 0.5 | 1.5 | 2.4 |
| 6073013802 | 27.70 | 55.25 | 55-60% | 2957 | San Diego | 16.8 | 75.7 | 7.5 | 48.4 | 27.9 | 12.6 | 0.4 | 6.8 | 3.9 |
| 6067000400 | 27.68 | 55.24 | 55-60% | 3667 | Sacramento | 5.4 | 87.6 | 7 | 19.9 | 67.6 | 3.9 | 0.8 | 3.5 | 4.2 |
| 6073020029 | 27.68 | 55.23 | 55-60% | 4819 | San Diego | 15.3 | 67.2 | 17.5 | 62.5 | 28.7 | 1.4 | 0.8 | 5 | 1.5 |
| 6065043513 | 27.68 | 55.22 | 55-60% | 2456 | Riverside | 15.4 | 67 | 17.6 | 46.1 | 42.1 | 6.5 | 1.1 | 2 | 2.2 |
| 6073002709 | 27.67 | 55.20 | 55-60% | 3945 | San Diego | 20.3 | 75.2 | 4.5 | 52.6 | 9.8 | 18.4 | 0.5 | 16.6 | 2.2 |
| 6037900501 | 27.67 | 55.19 | 55-60% | 6764 | Los Angeles | 17.7 | 74.4 | 7.9 | 43.3 | 26.8 | 23.7 | 0.5 | 2.9 | 2.8 |
| 6073013907 | 27.66 | 55.18 | 55-60% | 4185 | San Diego | 19.7 | 73.6 | 6.7 | 60.7 | 15.8 | 13.1 | 0.3 | 6.5 | 3.7 |
| 6099000101 | 27.65 | 55.16 | 55-60% | 4928 | Stanislaus | 10.8 | 73.1 | 16.1 | 16.1 | 79.3 | 0.4 | 0.5 | 1.2 | 2.4 |
| 6039000102 | 27.64 | 55.15 | 55-60% | 4163 | Madera | 9.6 | 66.2 | 24.2 | 10.2 | 75.9 | 0.5 | 8.7 | 0.9 | 3.9 |
| 6071010016 | 27.63 | 55.14 | 55-60% | 5584 | San Bernardino | 18.2 | 75.4 | 6.4 | 58 | 31.8 | 6 | 0.6 | 2.1 | 1.5 |
| 6037576801 | 27.63 | 55.13 | 55-60% | 4325 | Los Angeles | 9.9 | 81.8 | 8.3 | 36.1 | 41.9 | 11 | 0.5 | 7.5 | 2.9 |
| 6089012301 | 27.63 | 55.11 | 55-60% | 2578 | Shasta | 12 | 70.4 | 17.6 | 15.2 | 76.8 | 0.5 | 2.8 | 1.5 | 3.3 |
| 6095251400 | 27.62 | 55.10 | 55-60% | 5357 | Solano | 11.9 | 74.2 | 13.9 | 21.9 | 42.2 | 15.2 | 0.5 | 14.1 | 6.1 |

| | | | | | | | | | | | | | | |
|---|---|---|---|---|---|---|---|---|---|---|---|---|---|---|
| 6059088201 | 27.62 | 55.09 | 55-60% | 4022 | Orange | 15.1 | 72.7 | 12.2 | 40.1 | 28.6 | 1.4 | 0.2 | 28 | 1.7 |
| 6073002201 | 27.61 | 55.08 | 55-60% | 3796 | San Diego | 18.8 | 77.8 | 3.4 | 61.4 | 8 | 17.7 | 0.1 | 10.9 | 2 |
| 6037501503 | 27.61 | 55.06 | 55-60% | 5016 | Los Angeles | 14.3 | 78.9 | 6.8 | 68.4 | 25.2 | 1.4 | 0.4 | 3 | 1.6 |
| 6045011300 | 27.61 | 55.05 | 55-60% | 5972 | Mendocino | 15.2 | 73.3 | 11.5 | 34.4 | 56.5 | 0.7 | 4.1 | 1.8 | 2.6 |
| 6001443002 | 27.61 | 55.04 | 55-60% | 5918 | Alameda | 12.4 | 78.2 | 9.4 | 23.1 | 29.2 | 2.7 | 0.3 | 41 | 3.6 |
| 6067001400 | 27.60 | 55.03 | 55-60% | 2466 | Sacramento | 3.1 | 82.1 | 14.8 | 13.7 | 71.2 | 5.4 | 0.7 | 4.4 | 4.7 |
| 6037297602 | 27.60 | 55.01 | 55-60% | 3503 | Los Angeles | 10.3 | 77.1 | 12.6 | 32.3 | 53.4 | 5.9 | 0.7 | 4.5 | 3.3 |
| 6065044404 | 27.59 | 55.00 | 55-60% | 1860 | Riverside | 8.8 | 74.6 | 16.6 | 11.6 | 77.5 | 0.8 | 0.4 | 6.3 | 3.3 |
| 6001406300 | 27.59 | 54.99 | 50-55% | 4113 | Alameda | 15 | 75.4 | 9.6 | 38.3 | 6.2 | 18.2 | 0.1 | 34.7 | 2.6 |
| 6037216401 | 27.58 | 54.98 | 50-55% | 4189 | Los Angeles | 9.3 | 75.8 | 14.9 | 7.7 | 73.5 | 4.6 | 0.4 | 7.8 | 6 |
| 6013374000 | 27.58 | 54.96 | 50-55% | 4506 | Contra Costa | 14.1 | 75.6 | 10.3 | 50.3 | 19.1 | 18.8 | 0.3 | 8.3 | 3.2 |
| 6037900607 | 27.57 | 54.95 | 50-55% | 3904 | Los Angeles | 18.3 | 74.4 | 7.3 | 44.6 | 25.1 | 23.9 | 0.8 | 2.1 | 3.6 |
| 6085503118 | 27.56 | 54.94 | 50-55% | 5474 | Santa Clara | 17.3 | 78.2 | 4.5 | 54.8 | 7.6 | 2.8 | 0.5 | 32.6 | 1.8 |
| 6001444602 | 27.55 | 54.92 | 50-55% | 4014 | Alameda | 15 | 77.3 | 7.7 | 13.3 | 23.2 | 7.3 | 0.1 | 51.5 | 4.6 |
| 6023010800 | 27.55 | 54.91 | 50-55% | 4785 | Humboldt | 13.2 | 73.6 | 13.2 | 13.8 | 75.9 | 0.9 | 4.7 | 0.9 | 3.8 |
| 6037406601 | 27.55 | 54.90 | 50-55% | 5269 | Los Angeles | 12.1 | 74.2 | 13.7 | 57.8 | 19.2 | 4.4 | 0.1 | 16.6 | 1.9 |
| 6071009112 | 27.53 | 54.89 | 50-55% | 8744 | San Bernardino | 19.9 | 75.4 | 4.7 | 57.4 | 17.2 | 19 | 0.3 | 3.2 | 2.8 |
| 6067009900 | 27.53 | 54.87 | 50-55% | 3976 | Sacramento | 13.3 | 71.6 | 15.1 | 46.9 | 44.4 | 0.7 | 0.7 | 5 | 2.2 |
| 6019004602 | 27.52 | 54.86 | 50-55% | 2555 | Fresno | 11.3 | 70.4 | 18.3 | 19.5 | 72 | 1.6 | 0.4 | 4.3 | 2.2 |
| 6071011002 | 27.51 | 54.85 | 50-55% | 1673 | San Bernardino | 11 | 72.2 | 16.8 | 21.5 | 66.8 | 3.6 | 3.1 | 2 | 3 |
| 6053014000 | 27.49 | 54.84 | 50-55% | 2637 | Monterey | 15.2 | 76.9 | 7.9 | 51.6 | 33.3 | 2.8 | 0.3 | 8.6 | 3.4 |
| 6037269904 | 27.49 | 54.82 | 50-55% | 3902 | Los Angeles | 6.2 | 86.6 | 7.2 | 21.6 | 40.8 | 11.3 | 0.2 | 21.6 | 4.5 |
| 6075061100 | 27.49 | 54.81 | 50-55% | 4307 | San Francisco | 6.7 | 61.5 | 31.8 | 2.1 | 4.7 | 2.5 | 0 | 89.9 | 0.7 |
| 6067006004 | 27.48 | 54.80 | 50-55% | 2319 | Sacramento | 10 | 66.7 | 23.3 | 9 | 79.4 | 3.3 | 0.6 | 4.6 | 3.1 |
| 6097152802 | 27.48 | 54.79 | 50-55% | 6807 | Sonoma | 16.4 | 73.7 | 9.9 | 43.3 | 42.4 | 3.5 | 1.5 | 5.9 | 3.6 |
| 6073013906 | 27.47 | 54.77 | 50-55% | 4701 | San Diego | 15.3 | 74.1 | 10.6 | 41.5 | 31.3 | 14.4 | 0.2 | 7.7 | 4.9 |
| 6081602000 | 27.47 | 54.76 | 50-55% | 7649 | San Mateo | 11.7 | 75.4 | 12.9 | 35 | 24.5 | 1.2 | 0.2 | 35.5 | 3.6 |
| 6011000100 | 27.47 | 54.75 | 50-55% | 5183 | Colusa | 17.2 | 73.1 | 9.7 | 60.2 | 35.8 | 0.3 | 1 | 0.9 | 1.8 |
| 6101050701 | 27.46 | 54.74 | 50-55% | 4358 | Sutter | 15.8 | 71.4 | 12.8 | 43.5 | 43.3 | 0.5 | 1.1 | 9.9 | 1.7 |
| 6067009111 | 27.45 | 54.72 | 50-55% | 5539 | Sacramento | 13.6 | 78.9 | 7.5 | 22.3 | 46.6 | 10.8 | 1 | 12.6 | 6.7 |
| 6037141304 | 27.44 | 54.71 | 50-55% | 2738 | Los Angeles | 10.2 | 74.2 | 15.6 | 8.6 | 76.7 | 4.1 | 0.1 | 6.5 | 3.9 |
| 6001433800 | 27.43 | 54.70 | 50-55% | 7369 | Alameda | 13.5 | 77.1 | 9.4 | 35.4 | 16.6 | 15.5 | 0.5 | 29 | 3 |
| 6065046602 | 27.43 | 54.69 | 50-55% | 3712 | Riverside | 10.6 | 77.8 | 11.6 | 31.2 | 63.6 | 1 | 0.2 | 1.8 | 2.1 |
| 6037431900 | 27.43 | 54.67 | 50-55% | 3828 | Los Angeles | 10.6 | 76.8 | 12.6 | 16.4 | 23.6 | 0.8 | 0.1 | 57.4 | 1.6 |
| 6053011204 | 27.41 | 54.66 | 50-55% | 3190 | Monterey | 19.4 | 75.9 | 4.7 | 89.3 | 8.7 | 0.6 | 0.1 | 0.3 | 1 |
| 6037106642 | 27.40 | 54.65 | 50-55% | 3236 | Los Angeles | 10.5 | 72.8 | 16.7 | 22.3 | 58.6 | 3.5 | 0.1 | 12.6 | 2.8 |
| 6037111302 | 27.39 | 54.63 | 50-55% | 4786 | Los Angeles | 8.4 | 72.5 | 19.1 | 21.4 | 50.2 | 5.8 | 0.2 | 19.2 | 3.3 |
| 6037134306 | 27.38 | 54.62 | 50-55% | 3498 | Los Angeles | 15.2 | 75.7 | 9.1 | 44.5 | 26.6 | 8.2 | 0.5 | 17.5 | 2.7 |
| 6001409800 | 27.38 | 54.61 | 50-55% | 2887 | Alameda | 13.2 | 72 | 14.8 | 12.7 | 13.6 | 65.3 | 0.1 | 4.6 | 3.7 |
| 6089012102 | 27.36 | 54.60 | 50-55% | 1916 | Shasta | 14 | 63.5 | 22.5 | 9.3 | 82.5 | 0.6 | 2.2 | 1.6 | 3.8 |
| 6001436601 | 27.36 | 54.58 | 50-55% | 6091 | Alameda | 17 | 75.6 | 7.4 | 57.5 | 13.7 | 12 | 0.3 | 13.4 | 3.1 |
| 6067008133 | 27.36 | 54.57 | 50-55% | 2652 | Sacramento | 14.2 | 75.5 | 10.3 | 15.8 | 65 | 9.8 | 0.7 | 4.1 | 4.6 |
| 6059099229 | 27.35 | 54.56 | 50-55% | 6312 | Orange | 9.4 | 69.4 | 21.2 | 15.2 | 50 | 1.1 | 0.1 | 30.3 | 3.2 |
| 6073003115 | 27.35 | 54.55 | 50-55% | 6454 | San Diego | 14.2 | 73.6 | 12.2 | 31.7 | 8.1 | 13.1 | 0.2 | 43.5 | 3.4 |
| 6037920034 | 27.34 | 54.53 | 50-55% | 3628 | Los Angeles | 14.3 | 78.8 | 6.9 | 29.6 | 52.4 | 4.9 | 0.3 | 9.4 | 3.4 |
| 6037401800 | 27.34 | 54.52 | 50-55% | 7378 | Los Angeles | 9.4 | 73.1 | 17.5 | 18.2 | 60.1 | 3.6 | 0.2 | 14.4 | 3.5 |
| 6001405500 | 27.34 | 54.51 | 50-55% | 3643 | Alameda | 10.3 | 80.1 | 9.6 | 12.3 | 15.8 | 20.2 | 0.3 | 47.2 | 4.2 |
| 6037139503 | 27.33 | 54.50 | 50-55% | 4657 | Los Angeles | 7.2 | 71.2 | 21.6 | 11.5 | 73.4 | 3.7 | 0.1 | 5.6 | 5.6 |
| 6067007415 | 27.33 | 54.48 | 50-55% | 3039 | Sacramento | 10.8 | 72.5 | 16.7 | 17.9 | 62.3 | 9.7 | 0.5 | 4.1 | 5.5 |
| 6071010009 | 27.32 | 54.47 | 50-55% | 3511 | San Bernardino | 13.9 | 76.8 | 9.3 | 43.8 | 43.5 | 6.5 | 0.7 | 3.1 | 2.4 |
| 6037300902 | 27.32 | 54.46 | 50-55% | 1998 | Los Angeles | 10.8 | 70.1 | 19.1 | 12.6 | 66.6 | 0.7 | 0.1 | 16.2 | 4 |
| 6073002712 | 27.31 | 54.45 | 50-55% | 4652 | San Diego | 15.7 | 71 | 13.3 | 33.5 | 17.2 | 30.5 | 0.1 | 15.9 | 2.9 |
| 6029003600 | 27.29 | 54.43 | 50-55% | 4531 | Kern | 17.5 | 74.4 | 8.1 | 31.7 | 64.1 | 0.4 | 1.1 | 0.6 | 2.1 |
| 6037272202 | 27.29 | 54.42 | 50-55% | 3378 | Los Angeles | 9.8 | 83.8 | 6.4 | 43.4 | 39.2 | 3.9 | 0.4 | 9.3 | 3.8 |
| 6101051000 | 27.29 | 54.41 | 50-55% | 2461 | Sutter | 12.7 | 72.4 | 14.9 | 34.2 | 52.4 | 0.7 | 0.8 | 9.1 | 2.9 |
| 6037183401 | 27.29 | 54.40 | 50-55% | 2543 | Los Angeles | 11.7 | 77.8 | 10.5 | 61.5 | 15.7 | 1.3 | 0.4 | 19.2 | 1.9 |
| 6037554517 | 27.28 | 54.38 | 50-55% | 4883 | Los Angeles | 10 | 76.4 | 13.6 | 9.6 | 12.3 | 4 | 0.1 | 70.8 | 3.2 |
| 6053010505 | 27.28 | 54.37 | 50-55% | 4892 | Monterey | 16.6 | 75.2 | 8.2 | 69 | 21.9 | 1.9 | 0.6 | 4.6 | 1.9 |
| 6037211704 | 27.28 | 54.36 | 50-55% | 3016 | Los Angeles | 6.6 | 77.8 | 15.6 | 20.4 | 14.2 | 5.6 | 0 | 57.8 | 2 |
| 6001433104 | 27.27 | 54.34 | 50-55% | 3760 | Alameda | 12.9 | 77.8 | 9.3 | 33.1 | 25.4 | 23 | 0.5 | 14.4 | 3.7 |
| 6007003600 | 27.26 | 54.33 | 50-55% | 3404 | Butte | 13.9 | 73.2 | 12.9 | 24.9 | 68.8 | 0.7 | 1.6 | 1.5 | 2.5 |
| 6059088403 | 27.25 | 54.32 | 50-55% | 6896 | Orange | 14.4 | 78.8 | 6.8 | 55.4 | 17.4 | 2.7 | 0.2 | 22.2 | 2.1 |
| 6069000200 | 27.24 | 54.31 | 50-55% | 6051 | San Benito | 13.1 | 74.2 | 12.7 | 40.8 | 52 | 0.8 | 0.7 | 2.9 | 2.7 |
| 6107002004 | 27.23 | 54.29 | 50-55% | 4910 | Tulare | 13.3 | 71.3 | 15.4 | 41.4 | 50.5 | 1.6 | 0.5 | 4.1 | 1.9 |
| 6025011801 | 27.22 | 54.28 | 50-55% | 3821 | Imperial | 12.5 | 78.7 | 8.8 | 65.2 | 29.3 | 0.9 | 0.2 | 3.3 | 1 |
| 6001407000 | 27.21 | 54.27 | 50-55% | 5885 | Alameda | 13.3 | 76.8 | 9.9 | 26.3 | 11.9 | 25.3 | 0.6 | 32.4 | 3.5 |

| | | | | | | | | | | | | | | |
|---|---|---|---|---|---|---|---|---|---|---|---|---|---|---|
| 6059075404 | 27.20 | 54.26 | 50-55% | 6347 | Orange | 14.1 | 74.5 | 11.4 | 63 | 26.2 | 1.6 | 0.3 | 7.2 | 1.6 |
| 6029000905 | 27.19 | 54.24 | 50-55% | 2483 | Kern | 16.7 | 73.8 | 9.5 | 65.2 | 30.1 | 1.6 | 0.7 | 1.2 | 1.1 |
| 6037701602 | 27.18 | 54.23 | 50-55% | 4037 | Los Angeles | 9 | 77.5 | 13.5 | 13.2 | 67.6 | 3.9 | 0.1 | 10.3 | 4.8 |
| 6001407101 | 27.18 | 54.22 | 50-55% | 3414 | Alameda | 17 | 76 | 7 | 56.1 | 6.6 | 15.1 | 0.3 | 19.2 | 2.6 |
| 6037119201 | 27.17 | 54.21 | 50-55% | 4137 | Los Angeles | 14.2 | 77.9 | 7.9 | 86.4 | 6.4 | 1.1 | 0.2 | 5.3 | 0.6 |
| 6071007903 | 27.16 | 54.19 | 50-55% | 4365 | San Bernardino | 11.8 | 80.4 | 7.8 | 28 | 49.4 | 7.6 | 0.4 | 11.5 | 3 |
| 6055200201 | 27.14 | 54.18 | 50-55% | 3466 | Napa | 14.8 | 74.6 | 10.6 | 41.9 | 54.2 | 0.5 | 0.4 | 1.4 | 1.6 |
| 6019005407 | 27.14 | 54.17 | 50-55% | 3139 | Fresno | 10.7 | 73.2 | 16.1 | 21.9 | 62.2 | 2.3 | 0.8 | 10.2 | 2.6 |
| 6037137201 | 27.13 | 54.16 | 50-55% | 5270 | Los Angeles | 11.2 | 74.9 | 13.9 | 13.7 | 64 | 5.3 | 0.2 | 12.4 | 4.4 |
| 6071010022 | 27.13 | 54.14 | 50-55% | 4084 | San Bernardino | 13.6 | 72.5 | 13.9 | 33.7 | 58.5 | 3.1 | 0.7 | 1.6 | 2.4 |
| 6037102103 | 27.13 | 54.13 | 50-55% | 1740 | Los Angeles | 8.8 | 75.2 | 16 | 21.6 | 64 | 1.2 | 0.2 | 9.7 | 3.3 |
| 6037101220 | 27.12 | 54.12 | 50-55% | 3363 | Los Angeles | 11.5 | 76.9 | 11.6 | 37.8 | 49.4 | 1.1 | 0.3 | 8.1 | 3.2 |
| 6067005201 | 27.11 | 54.11 | 50-55% | 3040 | Sacramento | 4.8 | 94.3 | 0.9 | 30.4 | 38.4 | 11.9 | 0.6 | 13.5 | 5.4 |
| 6029003123 | 27.10 | 54.09 | 50-55% | 15296 | Kern | 19 | 76.5 | 4.5 | 41.8 | 32.3 | 7.1 | 0.5 | 14.9 | 3.3 |
| 6067005904 | 27.10 | 54.08 | 50-55% | 4825 | Sacramento | 10.5 | 71.5 | 18 | 12.4 | 73.8 | 5.8 | 0.6 | 4.1 | 3.4 |
| 6065041003 | 27.09 | 54.07 | 50-55% | 2521 | Riverside | 13.5 | 77.5 | 9 | 57 | 34.9 | 1.8 | 0.3 | 4.8 | 1.2 |
| 6059075504 | 27.08 | 54.05 | 50-55% | 4041 | Orange | 11.9 | 71.6 | 16.5 | 28.6 | 59.6 | 1.4 | 0.3 | 7.7 | 2.4 |
| 6065040807 | 27.08 | 54.04 | 50-55% | 3391 | Riverside | 11.1 | 80.6 | 8.3 | 36.3 | 51.3 | 3.7 | 0.4 | 5.5 | 2.8 |
| 6037128802 | 27.07 | 54.03 | 50-55% | 4325 | Los Angeles | 12.1 | 74.3 | 13.6 | 18.4 | 62.8 | 6.1 | 0.3 | 8.9 | 3.5 |
| 6059075513 | 27.06 | 54.02 | 50-55% | 5074 | Orange | 14.8 | 78.4 | 6.8 | 53.9 | 24.4 | 3.5 | 0 | 16 | 2.1 |
| 6037194500 | 27.06 | 54.00 | 50-55% | 2037 | Los Angeles | 10.5 | 70 | 19.5 | 5.3 | 82.9 | 1.9 | 0 | 6.6 | 3.3 |
| 6007000903 | 27.05 | 53.99 | 50-55% | 6117 | Butte | 13.8 | 75.1 | 11.1 | 20 | 64.8 | 2.4 | 1.3 | 7.3 | 4.2 |
| 6037183222 | 27.05 | 53.98 | 50-55% | 3483 | Los Angeles | 9.6 | 75 | 15.4 | 49.2 | 26.5 | 2.9 | 0.4 | 18.1 | 3 |
| 6067002800 | 27.05 | 53.97 | 50-55% | 3291 | Sacramento | 17.2 | 74.8 | 8 | 39 | 15.4 | 30.1 | 1.5 | 8.6 | 5.3 |
| 6065045213 | 27.04 | 53.95 | 50-55% | 5216 | Riverside | 13.1 | 74.8 | 12.1 | 61.5 | 32 | 1.8 | 0.1 | 3.1 | 1.4 |
| 6059062610 | 27.03 | 53.94 | 50-55% | 6393 | Orange | 5.3 | 88.4 | 6.3 | 9.4 | 54.3 | 2.7 | 0.2 | 28.4 | 5.1 |
| 6029002819 | 27.00 | 53.93 | 50-55% | 4586 | Kern | 16.1 | 76.8 | 7.1 | 33.6 | 53.3 | 6.4 | 0.9 | 3.2 | 2.6 |
| 6037401312 | 27.00 | 53.92 | 50-55% | 5575 | Los Angeles | 7.8 | 69.7 | 22.5 | 32.1 | 55.2 | 2 | 0.2 | 7.6 | 2.8 |
| 6037462001 | 26.98 | 53.90 | 50-55% | 3974 | Los Angeles | 15.5 | 78.9 | 5.6 | 66.8 | 11.1 | 15.9 | 0.3 | 4.1 | 1.8 |
| 6001408600 | 26.98 | 53.89 | 50-55% | 5492 | Alameda | 16.1 | 74.4 | 9.5 | 45.1 | 2.3 | 45.1 | 0.2 | 5.1 | 2.3 |
| 6037189600 | 26.97 | 53.88 | 50-55% | 3529 | Los Angeles | 5.8 | 85.8 | 8.4 | 13.8 | 72.1 | 5.3 | 0.2 | 5.2 | 3.3 |
| 6065043506 | 26.97 | 53.87 | 50-55% | 6386 | Riverside | 14.1 | 63.9 | 22 | 38 | 50 | 4.7 | 0.7 | 4.4 | 2.2 |
| 6067007602 | 26.97 | 53.85 | 50-55% | 4619 | Sacramento | 11 | 71.5 | 17.5 | 10.8 | 74.2 | 4 | 0.5 | 6.2 | 4.3 |
| 6001422200 | 26.97 | 53.84 | 50-55% | 3144 | Alameda | 8.6 | 79.9 | 11.5 | 11.4 | 55 | 12.5 | 0.1 | 15.7 | 5.3 |
| 6103000500 | 26.96 | 53.83 | 50-55% | 5507 | Tehama | 13.9 | 73.4 | 12.7 | 17.5 | 75.5 | 0.9 | 2.4 | 0.8 | 2.9 |
| 6109002100 | 26.96 | 53.82 | 50-55% | 4439 | Tuolumne | 10.1 | 70.6 | 19.3 | 7.1 | 87.1 | 0.7 | 0.8 | 0.9 | 3.2 |
| 6111000701 | 26.95 | 53.80 | 50-55% | 6441 | Ventura | 19.2 | 73.5 | 7.3 | 86.4 | 11.8 | 0.2 | 0.5 | 0.7 | 0.4 |
| 6037550602 | 26.93 | 53.79 | 50-55% | 4211 | Los Angeles | 11.2 | 75.1 | 13.7 | 60.9 | 26.8 | 1.6 | 0.1 | 9.5 | 1 |
| 6029005300 | 26.92 | 53.78 | 50-55% | 2139 | Kern | 27.5 | 69.8 | 2.7 | 26 | 53 | 9.2 | 1.5 | 4.1 | 6.2 |
| 6005000303 | 26.92 | 53.76 | 50-55% | 5073 | Amador | 11 | 70.3 | 18.7 | 12.4 | 80 | 0.3 | 1.8 | 1.9 | 3.6 |
| 6067009322 | 26.92 | 53.75 | 50-55% | 13206 | Sacramento | 16.9 | 76.6 | 6.5 | 17.2 | 20.6 | 11.8 | 0.3 | 44.2 | 5.9 |
| 6037408624 | 26.92 | 53.74 | 50-55% | 3227 | Los Angeles | 8.8 | 74.2 | 17 | 26.5 | 13.7 | 1.4 | 0.1 | 57.3 | 1.1 |
| 6065043512 | 26.91 | 53.73 | 50-55% | 6580 | Riverside | 17.8 | 70.7 | 11.5 | 50.2 | 35.7 | 7 | 1 | 3.3 | 2.8 |
| 6013383000 | 26.91 | 53.71 | 50-55% | 4485 | Contra Costa | 10.4 | 75 | 14.6 | 17.6 | 42.6 | 11.4 | 0.4 | 22.6 | 5.4 |
| 6095252607 | 26.90 | 53.70 | 50-55% | 3819 | Solano | 20.4 | 72.4 | 7.2 | 49.6 | 20 | 15.4 | 0.6 | 8.9 | 5.5 |
| 6079011103 | 26.90 | 53.69 | 50-55% | 2737 | San Luis Obispo | 7.8 | 71 | 21.2 | 24.9 | 68.1 | 1.4 | 0.2 | 3.4 | 2 |
| 6041112201 | 26.90 | 53.68 | 50-55% | 7809 | Marin | 18.4 | 79.6 | 2 | 90.4 | 5.4 | 1.2 | 0.1 | 2 | 0.7 |
| 6073002703 | 26.89 | 53.66 | 50-55% | 6900 | San Diego | 14.6 | 77.4 | 8 | 40.3 | 27.2 | 12.8 | 0.3 | 15.8 | 3.7 |
| 6007000604 | 26.89 | 53.65 | 50-55% | 4217 | Butte | 8.8 | 89 | 2.2 | 18.9 | 62.4 | 4.5 | 0.5 | 9.3 | 4.3 |
| 6065043820 | 26.88 | 53.64 | 50-55% | 3895 | Riverside | 16.3 | 67.5 | 16.2 | 37.3 | 39.3 | 9.4 | 0.4 | 10.9 | 2.6 |
| 6081601200 | 26.88 | 53.63 | 50-55% | 6252 | San Mateo | 11.6 | 75.7 | 12.7 | 30.8 | 24.9 | 2.4 | 0.2 | 37.9 | 3.8 |
| 6071008602 | 26.86 | 53.61 | 50-55% | 3564 | San Bernardino | 12.7 | 74.6 | 12.7 | 28.9 | 61.2 | 3.2 | 0.3 | 3.9 | 2.5 |
| 6071012103 | 26.85 | 53.60 | 50-55% | 3828 | San Bernardino | 11.7 | 72.4 | 15.9 | 23.5 | 68.1 | 3 | 0.9 | 1.2 | 3.3 |
| 6013328000 | 26.85 | 53.59 | 50-55% | 2281 | Contra Costa | 7.1 | 69.1 | 23.8 | 21.9 | 48.8 | 6.6 | 0.7 | 18.2 | 3.7 |
| 6037183402 | 26.84 | 53.58 | 50-55% | 2820 | Los Angeles | 10.7 | 78 | 11.3 | 47 | 17.9 | 1.6 | 0 | 31.8 | 1.6 |
| 6073003003 | 26.82 | 53.56 | 50-55% | 5062 | San Diego | 12.3 | 76.4 | 11.3 | 44.9 | 25.1 | 18.9 | 0.8 | 5.8 | 4.5 |
| 6037482201 | 26.82 | 53.55 | 50-55% | 3813 | Los Angeles | 8 | 73.9 | 18.1 | 16.8 | 3.2 | 0.1 | 0 | 78.9 | 1 |
| 6085503707 | 26.81 | 53.54 | 50-55% | 5462 | Santa Clara | 17.3 | 76.3 | 6.4 | 48.4 | 5.5 | 2.4 | 0.1 | 41.9 | 1.6 |
| 6097153808 | 26.80 | 53.53 | 50-55% | 4251 | Sonoma | 14.3 | 72.4 | 13.3 | 43.4 | 51.7 | 0.8 | 1.1 | 1.3 | 1.8 |
| 6111001507 | 26.80 | 53.51 | 50-55% | 4330 | Ventura | 13.4 | 76 | 10.6 | 38.7 | 51.5 | 1.7 | 0.6 | 4.8 | 2.7 |
| 6059089107 | 26.78 | 53.50 | 50-55% | 5944 | Orange | 13.5 | 76.9 | 9.6 | 52.6 | 13.3 | 0.7 | 0.2 | 32.1 | 1 |
| 6073002705 | 26.77 | 53.49 | 50-55% | 4300 | San Diego | 13 | 74.5 | 12.5 | 28.7 | 16.3 | 13 | 0.1 | 38.9 | 3 |
| 6037900104 | 26.76 | 53.47 | 50-55% | 6242 | Los Angeles | 16.6 | 75.6 | 7.8 | 51.7 | 33.2 | 11.4 | 0.7 | 0.8 | 2.2 |
| 6067007802 | 26.76 | 53.46 | 50-55% | 4808 | Sacramento | 10.1 | 71.8 | 18.1 | 11.1 | 76.3 | 4.7 | 0.6 | 3.3 | 4 |
| 6065042715 | 26.75 | 53.45 | 50-55% | 12805 | Riverside | 17.1 | 75.6 | 7.3 | 35.8 | 43.9 | 6.2 | 0.2 | 10.6 | 3.3 |
| 6081604102 | 26.74 | 53.44 | 50-55% | 2321 | San Mateo | 8.4 | 75.2 | 16.4 | 17.4 | 30.8 | 4.6 | 0 | 42 | 5.3 |

| | | | | | | | | | | | | | | | |
|---|---|---|---|---|---|---|---|---|---|---|---|---|---|---|---|
| 6089010100 | 26.73 | 53.42 | 50-55% | 1581 | Shasta | 7.7 | 81.4 | 10.9 | 11.1 | 77 | 2 | 3.4 | 1.8 | 4.6 |
| 6073013203 | 26.73 | 53.41 | 50-55% | 6464 | San Diego | 15.3 | 74.7 | 10 | 79.6 | 8.9 | 3 | 0.1 | 6.9 | 1.4 |
| 6065045501 | 26.73 | 53.40 | 50-55% | 5518 | Riverside | 18.2 | 76.7 | 5.1 | 84.3 | 8.3 | 4.7 | 0.4 | 1.5 | 0.8 |
| 6037570702 | 26.73 | 53.39 | 50-55% | 2433 | Los Angeles | 10.7 | 76.7 | 12.6 | 30.2 | 38.8 | 9.2 | 0.2 | 17.4 | 4.1 |
| 6067008131 | 26.72 | 53.37 | 50-55% | 4922 | Sacramento | 11.3 | 72.7 | 16 | 13.5 | 69.6 | 7 | 0.8 | 3.7 | 5.3 |
| 6085503708 | 26.70 | 53.36 | 50-55% | 2725 | Santa Clara | 12 | 77.1 | 10.9 | 24 | 5.5 | 1.9 | 0.1 | 66.5 | 2 |
| 6077001200 | 26.69 | 53.35 | 50-55% | 5303 | San Joaquin | 6.2 | 79.4 | 14.4 | 20.4 | 55.5 | 3.2 | 0.4 | 16.3 | 4.2 |
| 6037481902 | 26.68 | 53.34 | 50-55% | 3355 | Los Angeles | 10.5 | 71.6 | 17.9 | 44.8 | 10.3 | 1.9 | 0.1 | 41.3 | 1.6 |
| 6037134302 | 26.67 | 53.32 | 50-55% | 3732 | Los Angeles | 11.2 | 74.9 | 13.9 | 22.8 | 54.4 | 2.9 | 0.1 | 15.3 | 4.4 |
| 6059110607 | 26.67 | 53.31 | 50-55% | 3845 | Orange | 13.5 | 78.1 | 8.4 | 37.6 | 25.4 | 2.2 | 0.2 | 32.4 | 2.3 |
| 6059063908 | 26.66 | 53.30 | 50-55% | 5430 | Orange | 10.4 | 82.5 | 7.1 | 25.4 | 49.5 | 2.6 | 0.2 | 18.2 | 4.1 |
| 6001410200 | 26.66 | 53.29 | 50-55% | 3062 | Alameda | 15.6 | 76.3 | 8.1 | 33.9 | 4.4 | 53.6 | 0.1 | 5.7 | 2.3 |
| 6059021802 | 26.65 | 53.27 | 50-55% | 7091 | Orange | 12.8 | 71.3 | 15.9 | 20.5 | 67 | 1.9 | 0.3 | 7.4 | 2.9 |
| 6001440200 | 26.65 | 53.26 | 50-55% | 5989 | Alameda | 15.7 | 76.6 | 7.7 | 74.3 | 6.1 | 3.5 | 0.3 | 14.4 | 1.3 |
| 6001402900 | 26.65 | 53.25 | 50-55% | 1434 | Alameda | 4.3 | 72.3 | 23.4 | 9.6 | 23.5 | 20.2 | 0.1 | 43.2 | 3.4 |
| 6037406402 | 26.64 | 53.23 | 50-55% | 2076 | Los Angeles | 10.9 | 72.7 | 16.4 | 54.4 | 25.8 | 2.6 | 0.2 | 14.9 | 2 |
| 6095253402 | 26.63 | 53.22 | 50-55% | 6940 | Solano | 15.6 | 74.7 | 9.7 | 47.8 | 43.8 | 1.9 | 0.8 | 2.8 | 2.9 |
| 6087122300 | 26.62 | 53.21 | 50-55% | 3943 | Santa Cruz | 10.5 | 76.4 | 13.1 | 26.1 | 65.6 | 0.8 | 0.6 | 3.9 | 3 |
| 6071004503 | 26.62 | 53.20 | 50-55% | 3327 | San Bernardino | 12.9 | 79.3 | 7.8 | 34.7 | 50.1 | 7.8 | 0.2 | 3.8 | 3.3 |
| 6085502001 | 26.62 | 53.18 | 50-55% | 5022 | Santa Clara | 13.4 | 78.7 | 7.9 | 50.7 | 34 | 2.7 | 0.4 | 9.8 | 2.5 |
| 6013372000 | 26.62 | 53.17 | 50-55% | 7353 | Contra Costa | 14.3 | 77.3 | 8.4 | 57.9 | 14.9 | 10.5 | 0.3 | 13.4 | 3 |
| 6037101400 | 26.62 | 53.16 | 50-55% | 3903 | Los Angeles | 7.9 | 77.7 | 14.4 | 18.5 | 67.9 | 1.2 | 0.2 | 8.6 | 3.7 |
| 6059099212 | 26.62 | 53.15 | 50-55% | 4914 | Orange | 12.1 | 77.7 | 10.2 | 28.5 | 49.9 | 1.3 | 0.3 | 17.2 | 2.8 |
| 6037296300 | 26.61 | 53.13 | 50-55% | 4221 | Los Angeles | 10.8 | 76.4 | 12.8 | 35.1 | 41.2 | 6.3 | 0.2 | 13.3 | 3.8 |
| 6083002702 | 26.61 | 53.12 | 50-55% | 7395 | Santa Barbara | 20.7 | 73.8 | 5.5 | 72.8 | 17.8 | 4.5 | 0.4 | 2.2 | 2.3 |
| 6019005514 | 26.61 | 53.11 | 50-55% | 3961 | Fresno | 11.9 | 70.4 | 17.7 | 16.1 | 69.6 | 1.5 | 0.7 | 8.9 | 3.2 |
| 6073012002 | 26.61 | 53.10 | 50-55% | 3285 | San Diego | 11.9 | 65.5 | 22.6 | 35.9 | 5.8 | 5.6 | 0.1 | 50.2 | 2.5 |
| 6053000103 | 26.59 | 53.08 | 50-55% | 3894 | Monterey | 18.1 | 72.3 | 9.6 | 62 | 16.6 | 2.8 | 0.1 | 15.3 | 3.2 |
| 6059099906 | 26.58 | 53.07 | 50-55% | 4866 | Orange | 11 | 71.3 | 17.7 | 15.4 | 61.8 | 0.9 | 0.3 | 18 | 3.7 |
| 6065043306 | 26.58 | 53.06 | 50-55% | 4538 | Riverside | 14.3 | 67.1 | 18.6 | 35.1 | 54.4 | 4.5 | 0.6 | 3.3 | 2.1 |
| 6037212702 | 26.58 | 53.05 | 50-55% | 3635 | Los Angeles | 8.6 | 76.5 | 14.9 | 16.3 | 23.1 | 8.8 | 0 | 49.5 | 2.2 |
| 6001440331 | 26.57 | 53.03 | 50-55% | 3205 | Alameda | 15.3 | 76 | 8.7 | 18.4 | 10.5 | 7.6 | 0.2 | 58 | 5.3 |
| 6033000801 | 26.57 | 53.02 | 50-55% | 2894 | Lake | 14.7 | 70.5 | 14.8 | 23.5 | 65.8 | 3.7 | 1.3 | 1.4 | 4.4 |
| 6001436700 | 26.56 | 53.01 | 50-55% | 3284 | Alameda | 15.3 | 75.9 | 8.8 | 58.1 | 13.5 | 8.5 | 0.3 | 17.1 | 2.4 |
| 6073020207 | 26.56 | 53.00 | 50-55% | 4765 | San Diego | 20.4 | 74.7 | 4.9 | 75.2 | 18.3 | 1.8 | 0.1 | 3.1 | 1.4 |
| 6037550902 | 26.56 | 52.98 | 50-55% | 5572 | Los Angeles | 14.4 | 77.3 | 8.3 | 72 | 15.7 | 2.4 | 0.3 | 8.1 | 1.4 |
| 6013302008 | 26.54 | 52.97 | 50-55% | 7718 | Contra Costa | 17.2 | 77.9 | 4.9 | 38.8 | 39.7 | 9.3 | 0.6 | 7.5 | 4.2 |
| 6005000401 | 26.54 | 52.96 | 50-55% | 5020 | Amador | 8.8 | 64.5 | 26.7 | 9.4 | 84.1 | 0.4 | 1.7 | 1.7 | 2.6 |
| 6053011304 | 26.53 | 52.94 | 50-55% | 6688 | Monterey | 19.9 | 75.2 | 4.9 | 87.9 | 7.8 | 0.4 | 0.4 | 2.7 | 0.8 |
| 6037401202 | 26.53 | 52.93 | 50-55% | 4371 | Los Angeles | 10.7 | 75.8 | 13.5 | 36.9 | 49 | 1.1 | 0.1 | 10 | 2.8 |
| 6037551201 | 26.53 | 52.92 | 50-55% | 3588 | Los Angeles | 13.6 | 73.8 | 12.6 | 70.1 | 18.2 | 3.9 | 0.1 | 6.1 | 1.6 |
| 6085504322 | 26.52 | 52.91 | 50-55% | 5263 | Santa Clara | 15.4 | 80.1 | 4.5 | 10.5 | 12.5 | 5.1 | 0 | 69.3 | 2.6 |
| 6073020202 | 26.52 | 52.89 | 50-55% | 6689 | San Diego | 22.7 | 72.2 | 5.1 | 79.5 | 13.7 | 2.7 | 0.3 | 2.5 | 1.3 |
| 6059074110 | 26.50 | 52.88 | 50-55% | 3843 | Orange | 11.2 | 76.9 | 11.9 | 42.9 | 14.5 | 1.7 | 0.2 | 38.5 | 2.2 |
| 6085512402 | 26.50 | 52.87 | 50-55% | 5167 | Santa Clara | 12.6 | 74.7 | 12.7 | 40.7 | 48.2 | 0.6 | 0.4 | 7.7 | 2.3 |
| 6001437701 | 26.50 | 52.86 | 50-55% | 3649 | Alameda | 18.2 | 76.3 | 5.5 | 55.4 | 8.4 | 15.6 | 0.4 | 15.7 | 4.5 |
| 6065031200 | 26.47 | 52.84 | 50-55% | 6878 | Riverside | 12.6 | 75.1 | 12.3 | 47.7 | 42.8 | 4.3 | 0.3 | 3.2 | 1.7 |
| 6083002306 | 26.46 | 52.83 | 50-55% | 8810 | Santa Barbara | 16.3 | 71.5 | 12.2 | 65 | 24.5 | 1.7 | 0.4 | 7 | 1.6 |
| 6067007801 | 26.45 | 52.82 | 50-55% | 5481 | Sacramento | 11.2 | 72.6 | 16.2 | 11.8 | 74 | 6 | 0.5 | 3.7 | 4 |
| 6037480101 | 26.45 | 52.81 | 50-55% | 3908 | Los Angeles | 9.2 | 77.1 | 13.7 | 13.9 | 21.1 | 0.5 | 0.1 | 62.3 | 2.1 |
| 6037920036 | 26.44 | 52.79 | 50-55% | 3419 | Los Angeles | 15.4 | 78.7 | 5.9 | 55.7 | 35 | 1.8 | 0.6 | 4.7 | 2.1 |
| 6085508800 | 26.44 | 52.78 | 50-55% | 3766 | Santa Clara | 14.5 | 80.3 | 5.2 | 40 | 24.7 | 2.1 | 0.1 | 30.6 | 2.4 |
| 6053010501 | 26.44 | 52.77 | 50-55% | 6339 | Monterey | 12.4 | 75.1 | 12.5 | 38.4 | 52.9 | 1 | 0.7 | 4.4 | 2.6 |
| 6081607400 | 26.41 | 52.76 | 50-55% | 4451 | San Mateo | 12.5 | 67.5 | 20 | 19.7 | 52.9 | 1.9 | 0.1 | 21.3 | 4 |
| 6085509000 | 26.40 | 52.74 | 50-55% | 7407 | Santa Clara | 15.5 | 77.1 | 7.4 | 47.3 | 25.5 | 1.8 | 0.3 | 22.2 | 2.9 |
| 6113010608 | 26.40 | 52.73 | 50-55% | 5882 | Yolo | 7.9 | 89.5 | 2.6 | 13.6 | 43.5 | 1.9 | 0.2 | 36.5 | 4.3 |
| 6037700400 | 26.39 | 52.72 | 50-55% | 5237 | Los Angeles | 4.5 | 81.7 | 13.8 | 10.1 | 77.5 | 2.8 | 0.1 | 6.3 | 3.2 |
| 6085500200 | 26.39 | 52.71 | 50-55% | 5822 | Santa Clara | 7.2 | 87.2 | 5.6 | 39.4 | 34.5 | 6.5 | 0.3 | 15.8 | 3.5 |
| 6037195100 | 26.38 | 52.69 | 50-55% | 4717 | Los Angeles | 11 | 71.5 | 17.5 | 14.2 | 62.3 | 3.1 | 0 | 16.3 | 4 |
| 6037109800 | 26.37 | 52.68 | 50-55% | 4565 | Los Angeles | 11.5 | 75.5 | 13 | 46.2 | 33.3 | 3 | 0.4 | 14.7 | 2.5 |
| 6071002109 | 26.37 | 52.67 | 50-55% | 4626 | San Bernardino | 16 | 81.9 | 2.1 | 38.8 | 26.6 | 22 | 0.3 | 8.8 | 3.5 |
| 6071010020 | 26.37 | 52.65 | 50-55% | 7471 | San Bernardino | 19.9 | 70 | 10.1 | 45.8 | 41.5 | 8.2 | 0.2 | 1.8 | 2.3 |
| 6053014202 | 26.37 | 52.64 | 50-55% | 4075 | Monterey | 13.1 | 72.2 | 14.7 | 29 | 32.9 | 6.3 | 0.2 | 24.4 | 7.2 |
| 6065045217 | 26.37 | 52.63 | 50-55% | 6225 | Riverside | 18.6 | 75.5 | 5.9 | 79.4 | 16.5 | 1.5 | 0.2 | 1.7 | 0.7 |
| 6095252611 | 26.36 | 52.62 | 50-55% | 3263 | Solano | 18.1 | 74.4 | 7.5 | 30.8 | 20.9 | 30.8 | 0.9 | 9.7 | 6.8 |
| 6059011401 | 26.36 | 52.60 | 50-55% | 1982 | Orange | 9.9 | 74.5 | 15.6 | 23.3 | 66.4 | 1.8 | 0.2 | 5.8 | 2.6 |

| | | | | | | | | | | | | | | |
|---|---|---|---|---|---|---|---|---|---|---|---|---|---|---|
| 6065043810 | 26.35 | 52.59 | 50-55% | 4933 | Riverside | 10.8 | 62.3 | 26.9 | 25.7 | 58.3 | 5.7 | 0.4 | 7.7 | 2.1 |
| 6037482102 | 26.34 | 52.58 | 50-55% | 2828 | Los Angeles | 9.6 | 70.5 | 19.9 | 29.8 | 9.3 | 0.7 | 0 | 58.1 | 2.2 |
| 6065043311 | 26.34 | 52.57 | 50-55% | 2265 | Riverside | 14.8 | 73.4 | 11.8 | 33.3 | 57.7 | 2.9 | 1.1 | 2.8 | 2 |
| 6053010608 | 26.33 | 52.55 | 50-55% | 3646 | Monterey | 17.3 | 80.8 | 1.9 | 83.9 | 9 | 3.3 | 0.1 | 3.1 | 0.7 |
| 6067003501 | 26.33 | 52.54 | 50-55% | 2629 | Sacramento | 11.3 | 74.8 | 13.9 | 26.4 | 46.9 | 8.9 | 0.8 | 12.6 | 4.3 |
| 6067007204 | 26.32 | 52.53 | 50-55% | 4965 | Sacramento | 16.7 | 76.3 | 7 | 25.3 | 41.5 | 10.1 | 0.9 | 17.6 | 4.6 |
| 6059110011 | 26.31 | 52.52 | 50-55% | 2832 | Orange | 10.2 | 68.8 | 21 | 13.1 | 58.1 | 2.2 | 0.5 | 22.8 | 3.4 |
| 6065040701 | 26.31 | 52.50 | 50-55% | 2248 | Riverside | 9.3 | 79.6 | 11.1 | 24.7 | 68.9 | 1 | 0.4 | 2.7 | 2.3 |
| 6029003807 | 26.31 | 52.49 | 50-55% | 3616 | Kern | 13.3 | 77.5 | 9.2 | 21 | 72.4 | 0.7 | 2 | 1.6 | 2.3 |
| 6037111100 | 26.29 | 52.48 | 50-55% | 2982 | Los Angeles | 12.7 | 74.1 | 13.2 | 39.2 | 39.3 | 3.5 | 0.1 | 15.4 | 2.5 |
| 6023000100 | 26.29 | 52.47 | 50-55% | 4901 | Humboldt | 9.9 | 83.4 | 6.7 | 14.1 | 71.7 | 2.9 | 3.4 | 3.6 | 4.2 |
| 6059021814 | 26.28 | 52.45 | 50-55% | 6816 | Orange | 9.5 | 81.2 | 9.3 | 18.9 | 54.4 | 1.5 | 0.1 | 22 | 3.1 |
| 6075012302 | 26.28 | 52.44 | 50-55% | 3073 | San Francisco | 2 | 89.5 | 8.5 | 12.1 | 42.5 | 7.9 | 0.7 | 32.9 | 3.9 |
| 6037650004 | 26.27 | 52.43 | 50-55% | 4005 | Los Angeles | 10.4 | 80.1 | 9.5 | 20.6 | 27 | 6.4 | 0.1 | 41.2 | 4.6 |
| 6107001901 | 26.26 | 52.42 | 50-55% | 3390 | Tulare | 14.5 | 70.4 | 15.1 | 37.2 | 55.4 | 1.5 | 0.9 | 2.6 | 2.4 |
| 6001410400 | 26.25 | 52.40 | 50-55% | 3792 | Alameda | 15.7 | 75.4 | 8.9 | 43.4 | 4.5 | 40.6 | 0.1 | 8.7 | 2.8 |
| 6037106020 | 26.25 | 52.39 | 50-55% | 5557 | Los Angeles | 14.1 | 77.4 | 8.5 | 76.3 | 16.2 | 2.3 | 0.2 | 3.4 | 1.5 |
| 6073015701 | 26.23 | 52.38 | 50-55% | 6239 | San Diego | 16.5 | 75 | 8.5 | 34.6 | 44.7 | 10.1 | 0.5 | 3.8 | 6.3 |
| 6037111202 | 26.23 | 52.36 | 50-55% | 5213 | Los Angeles | 10.7 | 75 | 14.3 | 27.3 | 50.2 | 2.8 | 0.2 | 16.2 | 3.2 |
| 6037501900 | 26.23 | 52.35 | 50-55% | 4213 | Los Angeles | 13.8 | 77 | 9.2 | 67.9 | 27.6 | 0.8 | 0.1 | 2.5 | 1.1 |
| 6073008702 | 26.22 | 52.34 | 50-55% | 5206 | San Diego | 10.9 | 74.8 | 14.3 | 23.1 | 49 | 9 | 0.7 | 13.1 | 5.1 |
| 6067009408 | 26.22 | 52.33 | 50-55% | 1783 | Sacramento | 15.9 | 74.7 | 9.4 | 34.1 | 49.5 | 3.9 | 0.6 | 8.3 | 3.6 |
| 6059052411 | 26.22 | 52.31 | 50-55% | 5182 | Orange | 12.9 | 76 | 11.1 | 44.6 | 39.3 | 1 | 0.3 | 12.4 | 2.4 |
| 6067005510 | 26.21 | 52.30 | 50-55% | 4291 | Sacramento | 10.7 | 81.1 | 8.2 | 24.2 | 45.4 | 16.8 | 0.3 | 8 | 5.3 |
| 6037183510 | 26.21 | 52.29 | 50-55% | 2725 | Los Angeles | 13.2 | 77.6 | 9.2 | 78.2 | 11.1 | 0.7 | 0.2 | 8.6 | 1.2 |
| 6037910401 | 26.20 | 52.28 | 50-55% | 6608 | Los Angeles | 14 | 78 | 8 | 39.9 | 33.3 | 13.6 | 0.4 | 9.1 | 3.7 |
| 6073018603 | 26.20 | 52.26 | 50-55% | 6810 | San Diego | 14.4 | 76.7 | 8.9 | 63.7 | 23.8 | 5.2 | 0.7 | 4 | 2.7 |
| 6037401701 | 26.20 | 52.25 | 50-55% | 4137 | Los Angeles | 8.7 | 69 | 22.3 | 22.8 | 59.3 | 6.5 | 0.3 | 7.8 | 3.2 |
| 6001451501 | 26.20 | 52.24 | 50-55% | 4668 | Alameda | 14.3 | 71.7 | 14 | 16.8 | 67.5 | 2.3 | 0.1 | 9.7 | 3.5 |
| 6053010804 | 26.19 | 52.23 | 50-55% | 5029 | Monterey | 19.3 | 73 | 7.7 | 88.9 | 9 | 0.2 | 0.1 | 1.4 | 0.5 |
| 6037109604 | 26.19 | 52.21 | 50-55% | 2975 | Los Angeles | 12.5 | 75.8 | 11.7 | 60.5 | 23.8 | 3.9 | 0.1 | 9.7 | 2 |
| 6037137104 | 26.17 | 52.20 | 50-55% | 2717 | Los Angeles | 10 | 69.3 | 20.7 | 9.1 | 77.1 | 2.8 | 0.1 | 5.3 | 5.6 |
| 6065046401 | 26.16 | 52.19 | 50-55% | 3768 | Riverside | 13.8 | 77.9 | 8.3 | 37.8 | 55.1 | 1.9 | 0.2 | 2.6 | 2.4 |
| 6037311200 | 26.16 | 52.18 | 50-55% | 3138 | Los Angeles | 11.3 | 77 | 11.7 | 33 | 55.4 | 1.2 | 0.1 | 8.4 | 1.9 |
| 6077004106 | 26.15 | 52.16 | 50-55% | 1913 | San Joaquin | 11 | 71.4 | 17.6 | 35.1 | 57.4 | 0.3 | 0.2 | 5.1 | 2 |
| 6071011001 | 26.14 | 52.15 | 50-55% | 2390 | San Bernardino | 14.9 | 74.2 | 10.9 | 34.9 | 59.1 | 1.2 | 1.1 | 1 | 2.7 |
| 6083002705 | 26.13 | 52.14 | 50-55% | 4210 | Santa Barbara | 15.9 | 70.3 | 13.8 | 48.9 | 36.8 | 5.4 | 0.9 | 4.7 | 3.3 |
| 6085505006 | 26.13 | 52.13 | 50-55% | 3898 | Santa Clara | 13.1 | 83.8 | 3.1 | 5.3 | 25.7 | 2.1 | 0.2 | 63.6 | 3.1 |
| 6059087704 | 26.12 | 52.11 | 50-55% | 5061 | Orange | 12.9 | 75.9 | 11.2 | 42.2 | 27.3 | 2.4 | 0.1 | 25.8 | 2.2 |
| 6067009112 | 26.12 | 52.10 | 50-55% | 3630 | Sacramento | 13.1 | 80.5 | 6.4 | 23.1 | 49.9 | 10.1 | 0.6 | 10.6 | 5.6 |
| 6053011302 | 26.12 | 52.09 | 50-55% | 5813 | Monterey | 21.4 | 72.3 | 6.3 | 87.4 | 10.5 | 0.3 | 0.4 | 0.6 | 0.9 |
| 6067007020 | 26.11 | 52.07 | 50-55% | 4034 | Sacramento | 15 | 79 | 6 | 17.6 | 52.5 | 8.7 | 0.6 | 15.7 | 4.8 |
| 6085504805 | 26.11 | 52.06 | 50-55% | 5294 | Santa Clara | 8.3 | 73.6 | 18.1 | 16.7 | 54.2 | 2.1 | 0.2 | 23.3 | 3.5 |
| 6067005202 | 26.11 | 52.05 | 50-55% | 3154 | Sacramento | 9.5 | 71.8 | 18.7 | 15.5 | 67.6 | 4.1 | 0.7 | 8.2 | 3.9 |
| 6071009114 | 26.11 | 52.04 | 50-55% | 10232 | San Bernardino | 20.6 | 75.2 | 4.2 | 58.3 | 16.6 | 19.7 | 0.3 | 2.6 | 2.6 |
| 6073015000 | 26.05 | 52.02 | 50-55% | 6193 | San Diego | 11.5 | 79.4 | 9.1 | 21.6 | 61.6 | 6.4 | 0.3 | 6 | 4.1 |
| 6113010501 | 26.05 | 52.01 | 50-55% | 5922 | Yolo | 4.8 | 94.8 | 0.4 | 12.5 | 38.3 | 2.3 | 0.2 | 41.4 | 5.3 |
| 6037920038 | 26.05 | 52.00 | 50-55% | 4430 | Los Angeles | 17 | 76.3 | 6.7 | 49.6 | 35.1 | 7 | 0.1 | 5.9 | 2.4 |
| 6013336201 | 26.05 | 51.99 | 50-55% | 4032 | Contra Costa | 15.4 | 75.2 | 9.4 | 54.7 | 29.4 | 2.5 | 0.1 | 11 | 2.2 |
| 6053001400 | 26.05 | 51.97 | 50-55% | 2680 | Monterey | 13.3 | 76.1 | 10.6 | 47.9 | 41.5 | 1.6 | 0.5 | 4.1 | 4.3 |
| 6037930200 | 26.04 | 51.96 | 50-55% | 546 | Los Angeles | 12.3 | 77.3 | 10.4 | 36.8 | 55.5 | 1.8 | 0.9 | 3.5 | 1.5 |
| 6055200804 | 26.04 | 51.95 | 50-55% | 5566 | Napa | 18.2 | 76.6 | 5.2 | 69.9 | 27.2 | 0.4 | 0.4 | 0.6 | 1.5 |
| 6073018700 | 26.04 | 51.94 | 50-55% | 37452 | San Diego | 19.8 | 80.1 | 0.1 | 21.9 | 62.3 | 7.3 | 1.1 | 3.5 | 4 |
| 6111001301 | 26.03 | 51.92 | 50-55% | 7724 | Ventura | 13 | 79.6 | 7.4 | 40.2 | 50.2 | 1.7 | 0.5 | 4.2 | 3.2 |
| 6037128500 | 26.03 | 51.91 | 50-55% | 4015 | Los Angeles | 8.7 | 75.6 | 15.7 | 17.1 | 65.7 | 6.2 | 0.2 | 7.7 | 3.1 |
| 6085503504 | 26.02 | 51.90 | 50-55% | 6463 | Santa Clara | 17.7 | 75.5 | 6.8 | 80 | 1.9 | 1.6 | 0.1 | 15 | 1.4 |
| 6025011803 | 26.01 | 51.89 | 50-55% | 5937 | Imperial | 18.2 | 74.9 | 6.9 | 74.1 | 18.2 | 0.8 | 0.1 | 5.5 | 1.3 |
| 6107002006 | 26.01 | 51.87 | 50-55% | 4378 | Tulare | 12.7 | 76 | 11.3 | 25.7 | 66.6 | 0.9 | 0.4 | 4.1 | 2.4 |
| 6037900805 | 26.01 | 51.86 | 50-55% | 5089 | Los Angeles | 12.8 | 68 | 19.2 | 30.4 | 48.8 | 14 | 0.4 | 3.2 | 3.1 |
| 6037404000 | 26.01 | 51.85 | 50-55% | 4474 | Los Angeles | 14.7 | 77.6 | 7.7 | 59.1 | 23 | 3.4 | 0.2 | 12.1 | 2.2 |
| 6073002711 | 26.00 | 51.84 | 50-55% | 3200 | San Diego | 24.8 | 69.1 | 6.1 | 35.9 | 24.1 | 14.9 | 0.3 | 20.4 | 4.2 |
| 6037181300 | 26.00 | 51.82 | 50-55% | 3629 | Los Angeles | 10.2 | 73.8 | 16 | 33.3 | 31.6 | 2.2 | 0.2 | 30 | 2.7 |
| 6037111301 | 25.98 | 51.81 | 50-55% | 7087 | Los Angeles | 8.9 | 81.6 | 9.5 | 29.3 | 37.6 | 5.5 | 0.1 | 23.2 | 4.3 |
| 6111000500 | 25.98 | 51.80 | 50-55% | 1867 | Ventura | 15.7 | 66.1 | 18.2 | 65.6 | 32 | 0.2 | 0.2 | 1.1 | 1 |
| 6101051100 | 25.98 | 51.78 | 50-55% | 2551 | Sutter | 11.9 | 70.9 | 17.2 | 19.2 | 71.8 | 0.5 | 0.5 | 5.2 | 2.7 |
| 6037111205 | 25.97 | 51.77 | 50-55% | 3375 | Los Angeles | 9.2 | 75 | 15.8 | 18.1 | 41.4 | 4.6 | 0 | 32.5 | 3.4 |

| | | | | | | | | | | | | | | |
|---|---|---|---|---|---|---|---|---|---|---|---|---|---|---|
| 6037217001 | 25.97 | 51.76 | 50-55% | 2654 | Los Angeles | 18.3 | 70.2 | 11.5 | 6.9 | 83.3 | 3 | 0.1 | 2.7 | 4 |
| 6001441700 | 25.97 | 51.75 | 50-55% | 7436 | Alameda | 14.4 | 77.9 | 7.7 | 23 | 27.5 | 5.2 | 0.4 | 39 | 5 |
| 6037406000 | 25.96 | 51.73 | 50-55% | 5059 | Los Angeles | 11.4 | 75.7 | 12.9 | 55.4 | 29.9 | 3.3 | 0.5 | 9.4 | 1.5 |
| 6059088302 | 25.95 | 51.72 | 50-55% | 6029 | Orange | 11.3 | 75.4 | 13.3 | 26 | 31.9 | 1.6 | 0.1 | 38.5 | 1.9 |
| 6037406300 | 25.95 | 51.71 | 50-55% | 5532 | Los Angeles | 10.5 | 75.1 | 14.4 | 39 | 23.6 | 3.1 | 0.2 | 31.8 | 2.3 |
| 6067009107 | 25.95 | 51.70 | 50-55% | 3213 | Sacramento | 11.6 | 74.1 | 14.3 | 14.6 | 63.3 | 8.2 | 0.2 | 8.1 | 5.7 |
| 6037554802 | 25.95 | 51.68 | 50-55% | 6165 | Los Angeles | 9.5 | 75.5 | 15 | 24.1 | 25.4 | 3.5 | 0.2 | 44.2 | 2.5 |
| 6095251701 | 25.95 | 51.67 | 50-55% | 3372 | Solano | 13.4 | 78.6 | 8 | 24.5 | 31.8 | 24.8 | 0.9 | 13.3 | 4.7 |
| 6085504601 | 25.94 | 51.66 | 50-55% | 817 | Santa Clara | 10.4 | 72.7 | 16.9 | 25.6 | 50.8 | 3.3 | 0.1 | 16.4 | 3.8 |
| 6085505301 | 25.94 | 51.65 | 50-55% | 4424 | Santa Clara | 14.2 | 77 | 8.8 | 37 | 22.1 | 2.3 | 0.2 | 35 | 3.4 |
| 6065045705 | 25.94 | 51.63 | 50-55% | 7522 | Riverside | 26.2 | 71.1 | 2.7 | 97.4 | 1.4 | 0.3 | 0.1 | 0.4 | 0.4 |
| 6073018516 | 25.90 | 51.62 | 50-55% | 3992 | San Diego | 13.5 | 78.7 | 7.8 | 37.7 | 47.7 | 2.8 | 0.4 | 7.8 | 3.6 |
| 6013386000 | 25.90 | 51.61 | 50-55% | 3317 | Contra Costa | 11.3 | 73.2 | 15.5 | 17.5 | 30 | 14.1 | 0.5 | 32.8 | 5.1 |
| 6037137501 | 25.89 | 51.60 | 50-55% | 4124 | Los Angeles | 9.5 | 76.9 | 13.6 | 13 | 67.6 | 5.3 | 0.1 | 8.8 | 5.3 |
| 6037195400 | 25.89 | 51.58 | 50-55% | 4395 | Los Angeles | 6.7 | 81.8 | 11.5 | 26.9 | 53.5 | 2.7 | 0.1 | 13.7 | 3.1 |
| 6001408500 | 25.89 | 51.57 | 50-55% | 4972 | Alameda | 17.3 | 74.5 | 8.2 | 45.5 | 2 | 45.6 | 0.2 | 4.3 | 2.4 |
| 6065040613 | 25.88 | 51.56 | 50-55% | 12842 | Riverside | 20 | 75.4 | 4.6 | 39.3 | 24.7 | 9.3 | 0.2 | 23.4 | 3.1 |
| 6001406601 | 25.88 | 51.54 | 50-55% | 4596 | Alameda | 13.2 | 78 | 8.8 | 23.4 | 12.1 | 26.7 | 0.5 | 33.5 | 3.8 |
| 6037481714 | 25.88 | 51.53 | 50-55% | 2551 | Los Angeles | 7.7 | 68.4 | 23.9 | 11.2 | 1.8 | 0.3 | 0 | 85.9 | 0.8 |
| 6107003501 | 25.86 | 51.52 | 50-55% | 2861 | Tulare | 15.1 | 70.5 | 14.4 | 37.2 | 51.7 | 0.3 | 0.5 | 7.9 | 2.4 |
| 6037195500 | 25.85 | 51.51 | 50-55% | 4971 | Los Angeles | 8.1 | 80.1 | 11.8 | 33.3 | 43.5 | 1.9 | 0.1 | 18.1 | 3.2 |
| 6071002033 | 25.85 | 51.49 | 50-55% | 7663 | San Bernardino | 14.3 | 80.2 | 5.5 | 35.2 | 44.8 | 5.9 | 0.3 | 10.8 | 3.2 |
| 6097150901 | 25.85 | 51.48 | 50-55% | 4904 | Sonoma | 13.7 | 76.7 | 9.6 | 31 | 62.1 | 1.5 | 0.3 | 2 | 3.2 |
| 6037463200 | 25.85 | 51.47 | 50-55% | 3403 | Los Angeles | 10.3 | 69.7 | 20 | 25.8 | 42.7 | 5.3 | 0.2 | 23 | 3 |
| 6059099703 | 25.84 | 51.46 | 50-55% | 4979 | Orange | 10.6 | 72.5 | 16.9 | 15 | 39.5 | 0.9 | 0.1 | 41.6 | 2.8 |
| 6097153001 | 25.84 | 51.44 | 50-55% | 6594 | Sonoma | 16.6 | 74.8 | 8.6 | 42.7 | 43.9 | 2.7 | 1 | 6.2 | 3.4 |
| 6085504002 | 25.83 | 51.43 | 50-55% | 5875 | Santa Clara | 15.6 | 75 | 9.4 | 66.3 | 3.5 | 2.7 | 0.2 | 26 | 1.3 |
| 6065042619 | 25.83 | 51.42 | 50-55% | 11267 | Riverside | 21.6 | 74.8 | 3.6 | 62.5 | 13.3 | 15.2 | 0.2 | 6.1 | 2.7 |
| 6011000300 | 25.82 | 51.41 | 50-55% | 6055 | Colusa | 18 | 72.8 | 9.2 | 68.7 | 26.6 | 0.9 | 1 | 2 | 0.9 |
| 6037301000 | 25.82 | 51.39 | 50-55% | 4841 | Los Angeles | 9 | 75.3 | 15.7 | 18.7 | 55.8 | 2.3 | 0.2 | 20 | 3.1 |
| 6013313103 | 25.81 | 51.38 | 50-55% | 7723 | Contra Costa | 13.5 | 77.2 | 9.3 | 32.8 | 28.8 | 16.8 | 0.3 | 16.3 | 4.9 |
| 6037403401 | 25.79 | 51.37 | 50-55% | 5038 | Los Angeles | 10.2 | 77.2 | 12.6 | 27 | 13 | 2.8 | 0.1 | 55 | 2.1 |
| 6067008135 | 25.78 | 51.36 | 50-55% | 4000 | Sacramento | 10.9 | 64.4 | 24.7 | 11.9 | 75.4 | 4.9 | 0.3 | 3.6 | 3.9 |
| 6037267502 | 25.78 | 51.34 | 50-55% | 3243 | Los Angeles | 7.6 | 82.4 | 10 | 22.5 | 50.9 | 2.6 | 0.1 | 19.5 | 4.5 |
| 6059075816 | 25.78 | 51.33 | 50-55% | 3709 | Orange | 15.7 | 76.6 | 7.7 | 44.3 | 35.8 | 2.2 | 0.2 | 14.8 | 2.8 |
| 6037403402 | 25.77 | 51.32 | 50-55% | 3322 | Los Angeles | 8 | 77.6 | 14.4 | 23.9 | 17.4 | 2.7 | 0.3 | 53.4 | 2.2 |
| 6065046402 | 25.77 | 51.31 | 50-55% | 4684 | Riverside | 14.8 | 77.3 | 7.9 | 42.3 | 51.1 | 2 | 0.6 | 1.3 | 2.8 |
| 6059099234 | 25.76 | 51.29 | 50-55% | 3466 | Orange | 8.6 | 69 | 22.4 | 10.4 | 51.2 | 0.6 | 0.3 | 34.4 | 3.1 |
| 6029005600 | 25.76 | 51.28 | 50-55% | 2253 | Kern | 14.3 | 72.6 | 13.1 | 18 | 68 | 7 | 1.8 | 2.1 | 3.1 |
| 6067003102 | 25.76 | 51.27 | 50-55% | 2933 | Sacramento | 14.9 | 73.3 | 11.8 | 44.3 | 34.7 | 4.9 | 1.5 | 11.1 | 3.5 |
| 6073012003 | 25.75 | 51.25 | 50-55% | 3351 | San Diego | 13.7 | 74.4 | 11.9 | 58.4 | 10.3 | 3 | 0.1 | 26 | 2.1 |
| 6115040800 | 25.75 | 51.24 | 50-55% | 4233 | Yuba | 15.4 | 73 | 11.6 | 16.8 | 71.2 | 0.8 | 1.5 | 5 | 4.7 |
| 6085512100 | 25.75 | 51.23 | 50-55% | 1666 | Santa Clara | 11.4 | 75.1 | 13.5 | 42.1 | 37 | 0.5 | 0.4 | 17.5 | 2.6 |
| 6013356001 | 25.74 | 51.22 | 50-55% | 3759 | Contra Costa | 10.9 | 76.8 | 12.3 | 23.9 | 26.2 | 13.2 | 0.3 | 30.8 | 5.6 |
| 6103000100 | 25.73 | 51.20 | 50-55% | 4699 | Tehama | 11.1 | 68.5 | 20.4 | 10.5 | 82.8 | 0.9 | 2.2 | 0.5 | 3.1 |
| 6059110401 | 25.72 | 51.19 | 50-55% | 4953 | Orange | 13.4 | 75.4 | 11.2 | 40.8 | 33.2 | 3 | 0.1 | 19.7 | 3.1 |
| 6089012701 | 25.72 | 51.18 | 50-55% | 4392 | Shasta | 12.8 | 67.8 | 19.4 | 9.9 | 80.7 | 0.4 | 5.4 | 0.3 | 3.2 |
| 6073010112 | 25.72 | 51.17 | 50-55% | 4764 | San Diego | 18.2 | 76.8 | 5 | 83 | 6.5 | 4.6 | 0.3 | 4.1 | 1.6 |
| 6107001800 | 25.71 | 51.15 | 50-55% | 4689 | Tulare | 15.4 | 71.2 | 13.4 | 38.9 | 53.9 | 2.3 | 0.7 | 1.7 | 2.5 |
| 6077004204 | 25.70 | 51.14 | 50-55% | 3006 | San Joaquin | 10.9 | 71.9 | 17.2 | 20.6 | 73.9 | 0.5 | 0.7 | 2.2 | 2.1 |
| 6033000802 | 25.69 | 51.13 | 50-55% | 4234 | Lake | 15 | 72.2 | 12.8 | 23.3 | 65.5 | 3.4 | 1.7 | 1.5 | 4.6 |
| 6059099250 | 25.69 | 51.12 | 50-55% | 3062 | Orange | 8.2 | 73.4 | 18.4 | 14.5 | 52.9 | 1.3 | 0.3 | 27.7 | 3.3 |
| 6097152100 | 25.69 | 51.10 | 50-55% | 3004 | Sonoma | 8.6 | 80.6 | 10.8 | 22.7 | 63.8 | 3.5 | 1.8 | 5.2 | 2.9 |
| 6065044300 | 25.68 | 51.09 | 50-55% | 4774 | Riverside | 12.8 | 75.8 | 11.4 | 48.5 | 29.6 | 7.8 | 1.1 | 10.9 | 2.1 |
| 6037650602 | 25.67 | 51.08 | 50-55% | 7161 | Los Angeles | 10.9 | 76.4 | 12.7 | 11.1 | 29.3 | 4.2 | 0.2 | 50.6 | 4.6 |
| 6065042412 | 25.67 | 51.07 | 50-55% | 5129 | Riverside | 10.2 | 77.7 | 12.1 | 31 | 46.1 | 12.6 | 0.2 | 6.1 | 4 |
| 6075012202 | 25.67 | 51.05 | 50-55% | 2986 | San Francisco | 4.2 | 86.7 | 9.1 | 18.4 | 35.1 | 12.7 | 1 | 28.1 | 4.8 |
| 6067007416 | 25.65 | 51.04 | 50-55% | 3866 | Sacramento | 13.9 | 73.2 | 12.9 | 19.7 | 58.4 | 10.2 | 0.6 | 5.4 | 5.7 |
| 6073010104 | 25.65 | 51.03 | 50-55% | 3217 | San Diego | 11.2 | 73.3 | 15.5 | 46.9 | 33 | 1.9 | 0.5 | 13.5 | 4.2 |
| 6073016804 | 25.65 | 51.02 | 50-55% | 7292 | San Diego | 16.3 | 77.9 | 5.8 | 23.3 | 69.7 | 1.1 | 0.7 | 1.4 | 3.7 |
| 6065041910 | 25.64 | 51.00 | 50-55% | 6342 | Riverside | 13.5 | 72 | 14.5 | 33.9 | 50.5 | 5.4 | 0.2 | 6.9 | 3.2 |
| 6067007019 | 25.64 | 50.99 | 50-55% | 1203 | Sacramento | 29.4 | 68.1 | 2.5 | 24.2 | 12.9 | 39.2 | 0.2 | 14.6 | 8.9 |
| 6067003502 | 25.64 | 50.98 | 50-55% | 2916 | Sacramento | 10.5 | 71.9 | 17.6 | 30 | 40.4 | 3.5 | 0.7 | 21.8 | 3.6 |
| 6103000600 | 25.64 | 50.96 | 50-55% | 5213 | Tehama | 11.9 | 70.1 | 18 | 15.3 | 78.6 | 0.5 | 1.2 | 1.7 | 2.7 |
| 6013336102 | 25.64 | 50.95 | 50-55% | 7595 | Contra Costa | 18.8 | 77.7 | 3.5 | 65 | 16.8 | 5.6 | 0.4 | 9.5 | 2.7 |
| 6075010700 | 25.63 | 50.94 | 50-55% | 5592 | San Francisco | 5.4 | 65.5 | 29.1 | 3 | 14.9 | 1.5 | 0.1 | 79.3 | 1.2 |

| | | | | | | | | | | | | | | | |
|---|---|---|---|---|---|---|---|---|---|---|---|---|---|---|---|
| 6059088301 | 25.62 | 50.93 | 50-55% | 6430 | Orange | 14.1 | 74.7 | 11.2 | 41.5 | 26 | 0.8 | 0.2 | 29.4 | 2 |
| 6069000501 | 25.60 | 50.91 | 50-55% | 5395 | San Benito | 14.8 | 79.2 | 6 | 46.2 | 47 | 0.7 | 0.5 | 3 | 2.6 |
| 6111001502 | 25.59 | 50.90 | 50-55% | 8668 | Ventura | 12.9 | 74.5 | 12.6 | 34.5 | 54.2 | 1.9 | 0.4 | 6.3 | 2.6 |
| 6071012200 | 25.59 | 50.89 | 50-55% | 6076 | San Bernardino | 4.1 | 94.5 | 1.4 | 35.8 | 26.1 | 23.1 | 0.4 | 12 | 2.5 |
| 6097153005 | 25.58 | 50.88 | 50-55% | 6669 | Sonoma | 11.1 | 74.8 | 14.1 | 24.5 | 64.9 | 1.3 | 1.1 | 5.3 | 2.9 |
| 6073020108 | 25.57 | 50.86 | 50-55% | 5813 | San Diego | 18.1 | 75.5 | 6.4 | 69.2 | 20.7 | 2.7 | 0.6 | 5.3 | 1.5 |
| 6059075301 | 25.56 | 50.85 | 50-55% | 5712 | Orange | 15.6 | 76.2 | 8.2 | 66.7 | 19.7 | 1.4 | 0.3 | 10.6 | 1.3 |
| 6067007012 | 25.54 | 50.84 | 50-55% | 3345 | Sacramento | 13.8 | 79.5 | 6.7 | 34.1 | 38 | 16.1 | 0.4 | 7.1 | 4.2 |
| 6073014805 | 25.53 | 50.83 | 50-55% | 4328 | San Diego | 9.9 | 76.2 | 13.9 | 19.6 | 62.5 | 8.1 | 0.3 | 6.2 | 3.3 |
| 6085501900 | 25.53 | 50.81 | 50-55% | 4641 | Santa Clara | 12.2 | 78.2 | 9.6 | 38.1 | 32.8 | 7.5 | 0.3 | 17.8 | 3.5 |
| 6081601400 | 25.52 | 50.80 | 50-55% | 6658 | San Mateo | 8.7 | 74.9 | 16.4 | 11.2 | 12.1 | 2.1 | 0.1 | 71.3 | 3.3 |
| 6085503713 | 25.51 | 50.79 | 50-55% | 2974 | Santa Clara | 16.9 | 67.9 | 15.2 | 61.9 | 6.1 | 3.3 | 0.4 | 26.8 | 1.6 |
| 6077003209 | 25.49 | 50.78 | 50-55% | 3540 | San Joaquin | 12.6 | 73 | 14.4 | 28.4 | 47.7 | 10.1 | 0.3 | 9.7 | 3.8 |
| 6067007018 | 25.49 | 50.76 | 50-55% | 5083 | Sacramento | 12.8 | 81 | 6.2 | 16.9 | 31.9 | 14.4 | 0.4 | 30.1 | 6.3 |
| 6059075807 | 25.48 | 50.75 | 50-55% | 4324 | Orange | 12.4 | 74.1 | 13.5 | 40.6 | 45.3 | 1.4 | 0.5 | 10 | 2.2 |
| 6001428100 | 25.47 | 50.74 | 50-55% | 4651 | Alameda | 12.2 | 76.3 | 11.5 | 13.3 | 57.9 | 3.1 | 0.2 | 19.5 | 6 |
| 6071000105 | 25.45 | 50.73 | 50-55% | 6676 | San Bernardino | 10.3 | 83.5 | 6.2 | 22.5 | 25.3 | 4.8 | 0.1 | 44.2 | 3 |
| 6073018903 | 25.44 | 50.71 | 50-55% | 4861 | San Diego | 13 | 72 | 15 | 48.3 | 47.1 | 0.7 | 0.5 | 1.6 | 1.8 |
| 6095253101 | 25.44 | 50.70 | 50-55% | 4974 | Solano | 12.5 | 72.7 | 14.8 | 26.4 | 63.9 | 2.5 | 0.5 | 3.5 | 3.3 |
| 6059110014 | 25.44 | 50.69 | 50-55% | 4905 | Orange | 12.6 | 78.6 | 8.8 | 25 | 51.3 | 4 | 0.1 | 15.3 | 4.2 |
| 6059062647 | 25.44 | 50.67 | 50-55% | 4123 | Orange | 5.8 | 45.9 | 48.3 | 17 | 65 | 0.8 | 0.1 | 14.9 | 2.2 |
| 6001405600 | 25.43 | 50.66 | 50-55% | 3137 | Alameda | 10.8 | 80.6 | 8.6 | 13.1 | 20.8 | 22.6 | 0.3 | 38.5 | 4.7 |
| 6067009634 | 25.43 | 50.65 | 50-55% | 4913 | Sacramento | 19.9 | 75.5 | 4.6 | 36.5 | 7.8 | 25.5 | 0.5 | 25 | 4.6 |
| 6059088105 | 25.43 | 50.64 | 50-55% | 4133 | Orange | 10.7 | 76.1 | 13.2 | 30.4 | 26.3 | 1 | 0.1 | 40.5 | 1.6 |
| 6001425103 | 25.42 | 50.62 | 50-55% | 2502 | Alameda | 8.6 | 87.1 | 4.3 | 9.8 | 42 | 17.5 | 0.1 | 24.3 | 6.3 |
| 6071008200 | 25.40 | 50.61 | 50-55% | 5147 | San Bernardino | 10.6 | 70.6 | 18.8 | 17.2 | 73.2 | 2.9 | 0.4 | 3.5 | 2.8 |
| 6001430500 | 25.39 | 50.60 | 50-55% | 6049 | Alameda | 11.5 | 77.7 | 10.8 | 23.2 | 35.4 | 21.3 | 0.3 | 15.6 | 4.1 |
| 6083003001 | 25.38 | 50.59 | 50-55% | 5547 | Santa Barbara | 13.1 | 76.8 | 10.1 | 58.2 | 29.4 | 1.6 | 0.5 | 8.5 | 1.7 |
| 6067009501 | 25.38 | 50.57 | 50-55% | 2772 | Sacramento | 16.1 | 70.5 | 13.4 | 55.6 | 39.4 | 0.6 | 0.5 | 2 | 1.8 |
| 6037670100 | 25.37 | 50.56 | 50-55% | 6659 | Los Angeles | 12.2 | 75.2 | 12.6 | 31.2 | 41.7 | 6.6 | 0.4 | 16.1 | 3.9 |
| 6037300400 | 25.37 | 50.55 | 50-55% | 5740 | Los Angeles | 10.3 | 78.8 | 10.9 | 16.5 | 58.5 | 0.6 | 0.1 | 20.9 | 3.3 |
| 6037920035 | 25.36 | 50.54 | 50-55% | 7720 | Los Angeles | 15.8 | 78.4 | 5.8 | 49.6 | 36.7 | 3.1 | 0.2 | 7.8 | 2.6 |
| 6037502005 | 25.36 | 50.52 | 50-55% | 4251 | Los Angeles | 13.5 | 77.5 | 9 | 73.9 | 21.6 | 0.8 | 0.4 | 2.4 | 0.8 |
| 6037462100 | 25.35 | 50.51 | 50-55% | 5259 | Los Angeles | 14.3 | 77.4 | 8.3 | 61 | 18.2 | 13.2 | 0.1 | 4.8 | 2.8 |
| 6001430900 | 25.35 | 50.50 | 50-55% | 4681 | Alameda | 13.1 | 75.2 | 11.7 | 26.9 | 42.2 | 8.8 | 0.5 | 16.5 | 5.1 |
| 6037554516 | 25.35 | 50.49 | 50-55% | 3902 | Los Angeles | 8.1 | 73.7 | 18.2 | 12.1 | 15.6 | 6.2 | 0.1 | 63.4 | 2.6 |
| 6059063808 | 25.35 | 50.47 | 50-55% | 6393 | Orange | 16.9 | 79.2 | 3.9 | 74.5 | 19.3 | 1.1 | 0.4 | 3.6 | 1.2 |
| 6037670001 | 25.35 | 50.46 | 50-55% | 3311 | Los Angeles | 11.3 | 73.5 | 15.2 | 31.7 | 46.7 | 1.8 | 0.2 | 15.4 | 4.1 |
| 6037301205 | 25.34 | 50.45 | 50-55% | 2209 | Los Angeles | 10.7 | 72.2 | 17.1 | 8.7 | 75.6 | 0.8 | 0 | 11.9 | 3 |
| 6037480102 | 25.33 | 50.44 | 50-55% | 4303 | Los Angeles | 11.6 | 73.8 | 14.6 | 24.8 | 18 | 1.5 | 0.1 | 53.4 | 2.1 |
| 6081610601 | 25.33 | 50.42 | 50-55% | 6257 | San Mateo | 17.4 | 77.7 | 4.9 | 82.4 | 10.4 | 1.2 | 0.2 | 4.3 | 1.5 |
| 6005000301 | 25.31 | 50.41 | 50-55% | 5871 | Amador | 3.1 | 89.4 | 7.5 | 29.1 | 51.6 | 13.8 | 1.4 | 1.5 | 2.6 |
| 6037271802 | 25.30 | 50.40 | 50-55% | 5911 | Los Angeles | 7.9 | 83.7 | 8.4 | 25.4 | 36.2 | 8.2 | 0.2 | 25.7 | 4.4 |
| 6113011102 | 25.30 | 50.38 | 50-55% | 4884 | Yolo | 17.3 | 73.8 | 8.9 | 67.4 | 21.7 | 1 | 0.3 | 8.2 | 1.5 |
| 6037900605 | 25.27 | 50.37 | 50-55% | 7100 | Los Angeles | 17.7 | 74 | 8.3 | 48.4 | 28.5 | 16.8 | 0.4 | 3.1 | 2.9 |
| 6067003400 | 25.26 | 50.36 | 50-55% | 4085 | Sacramento | 10.4 | 66 | 23.6 | 22.1 | 39.3 | 14.3 | 0.2 | 18.9 | 5.3 |
| 6111004200 | 25.26 | 50.35 | 50-55% | 5324 | Ventura | 16.2 | 74 | 9.8 | 71 | 19 | 1.8 | 0.6 | 5.6 | 2 |
| 6065043279 | 25.22 | 50.33 | 50-55% | 5093 | Riverside | 13.4 | 71 | 15.6 | 25.3 | 68.2 | 1.4 | 0.6 | 2.1 | 2.4 |
| 6037408704 | 25.22 | 50.32 | 50-55% | 3155 | Los Angeles | 7.5 | 69.4 | 23.1 | 26.8 | 10.3 | 1.6 | 0.1 | 59.1 | 2.2 |
| 6037183221 | 25.20 | 50.31 | 50-55% | 3118 | Los Angeles | 12 | 78.6 | 9.4 | 66.1 | 21 | 2.7 | 0.4 | 8.5 | 1.4 |
| 6037481101 | 25.19 | 50.30 | 50-55% | 3814 | Los Angeles | 9.5 | 75 | 15.5 | 35.8 | 11.5 | 2.5 | 0.2 | 47.9 | 2.1 |
| 6037181600 | 25.18 | 50.28 | 50-55% | 4352 | Los Angeles | 7.8 | 84.8 | 7.4 | 36.6 | 36.4 | 2 | 0.4 | 20.4 | 4.3 |
| 6037189800 | 25.17 | 50.27 | 50-55% | 4021 | Los Angeles | 4.5 | 84.9 | 10.6 | 10.3 | 77.5 | 4.2 | 0.1 | 5 | 3 |
| 6073000700 | 25.17 | 50.26 | 50-55% | 3754 | San Diego | 3.7 | 83.9 | 12.4 | 15.6 | 72.5 | 2.7 | 0.3 | 5.7 | 3.1 |
| 6065031001 | 25.16 | 50.25 | 50-55% | 5622 | Riverside | 12.3 | 69.9 | 17.8 | 38.5 | 49 | 6.1 | 0.5 | 3.2 | 2.7 |
| 6059075901 | 25.15 | 50.23 | 50-55% | 4126 | Orange | 11.6 | 81.5 | 6.9 | 40.9 | 51.2 | 1.5 | 0.5 | 3.7 | 2.3 |
| 6013321200 | 25.15 | 50.22 | 50-55% | 5533 | Contra Costa | 9.1 | 82.4 | 8.5 | 14.4 | 50.5 | 2.9 | 0.3 | 27.5 | 4.4 |
| 6111001503 | 25.14 | 50.21 | 50-55% | 5898 | Ventura | 9.4 | 79.4 | 11.2 | 39.3 | 50.4 | 3.4 | 0.5 | 3.8 | 2.4 |
| 6013303205 | 25.14 | 50.20 | 50-55% | 8309 | Contra Costa | 10.7 | 63.1 | 26.2 | 18.6 | 70.4 | 3.3 | 0.2 | 4.5 | 3 |
| 6095253107 | 25.13 | 50.18 | 50-55% | 6016 | Solano | 15.7 | 73.9 | 10.4 | 30.6 | 50 | 7.6 | 0.9 | 5.3 | 5.7 |
| 6001428400 | 25.13 | 50.17 | 50-55% | 4357 | Alameda | 9.5 | 73 | 17.5 | 13.3 | 47.6 | 7.4 | 0.5 | 26.6 | 4.7 |
| 6037267200 | 25.12 | 50.16 | 50-55% | 5927 | Los Angeles | 9.6 | 75.9 | 14.5 | 7.6 | 67.6 | 1.8 | 0.1 | 17.5 | 5.4 |
| 6037431502 | 25.11 | 50.15 | 50-55% | 4361 | Los Angeles | 11.3 | 73.9 | 14.8 | 32.3 | 28.6 | 0.9 | 0.1 | 36.6 | 1.5 |
| 6073000300 | 25.10 | 50.13 | 50-55% | 4732 | San Diego | 3.7 | 79.5 | 16.8 | 14.5 | 73.1 | 2.3 | 0.3 | 6.7 | 3.2 |
| 6037910502 | 25.10 | 50.12 | 50-55% | 4086 | Los Angeles | 19.5 | 74.3 | 6.2 | 68 | 16.3 | 12.4 | 0 | 1.4 | 1.8 |
| 6073013409 | 25.10 | 50.11 | 50-55% | 5380 | San Diego | 11 | 75.6 | 13.4 | 50.8 | 29.5 | 4.1 | 0.6 | 12.2 | 2.8 |

| | | | | | | | | | | | | | | |
|---|---|---|---|---|---|---|---|---|---|---|---|---|---|---|
| 6053011102 | 25.09 | 50.09 | 50-55% | 11454 | Monterey | 19.9 | 74.5 | 5.6 | 86.5 | 8.4 | 1.2 | 0.2 | 2.6 | 1.1 |
| 6071008301 | 25.09 | 50.08 | 50-55% | 6340 | San Bernardino | 9.9 | 69.6 | 20.5 | 17.8 | 66.3 | 3.6 | 0.3 | 8.9 | 3 |
| 6073020211 | 25.09 | 50.07 | 50-55% | 6702 | San Diego | 16.9 | 73.9 | 9.2 | 61.5 | 27.2 | 2.4 | 0.5 | 5.9 | 2.4 |
| 6111006000 | 25.08 | 50.06 | 50-55% | 4845 | Ventura | 11.3 | 76.2 | 12.5 | 23.2 | 66.5 | 0.7 | 0.1 | 6.3 | 3.1 |
| 6075025100 | 25.07 | 50.04 | 50-55% | 3077 | San Francisco | 9.6 | 78 | 12.4 | 23.4 | 54 | 4.8 | 0.1 | 13.3 | 4.3 |
| 6059110605 | 25.07 | 50.03 | 50-55% | 6638 | Orange | 10.5 | 76 | 13.5 | 7.7 | 19.5 | 0.9 | 0 | 69.9 | 2 |
| 6037461902 | 25.07 | 50.02 | 50-55% | 1654 | Los Angeles | 5.7 | 81.8 | 12.5 | 16.3 | 43.8 | 14.6 | 0.4 | 21.2 | 3.7 |
| 6053000104 | 25.06 | 50.01 | 50-55% | 3478 | Monterey | 14.2 | 75 | 10.8 | 64.4 | 23.3 | 1.4 | 0.6 | 7.7 | 2.5 |
| 6059001101 | 25.04 | 49.99 | 45-50% | 4523 | Orange | 13.1 | 74.2 | 12.7 | 45.8 | 46.8 | 1.1 | 0.3 | 4.3 | 1.6 |
| 6083001000 | 25.04 | 49.98 | 45-50% | 6270 | Santa Barbara | 9.4 | 80.6 | 10 | 46.3 | 45.7 | 2 | 0.5 | 3.2 | 2.4 |
| 6019004208 | 25.03 | 49.97 | 45-50% | 7124 | Fresno | 14.4 | 74.6 | 11 | 23.1 | 52.1 | 6.1 | 0.3 | 15.3 | 3.2 |
| 6037572001 | 25.03 | 49.96 | 45-50% | 5278 | Los Angeles | 13.1 | 77.5 | 9.4 | 25.5 | 50.6 | 8.5 | 0.4 | 10.7 | 4.4 |
| 6029003811 | 25.02 | 49.94 | 45-50% | 2661 | Kern | 11.8 | 74.1 | 14.1 | 20.2 | 72.6 | 1.4 | 1.1 | 2.6 | 2.2 |
| 6037195201 | 25.01 | 49.93 | 45-50% | 2834 | Los Angeles | 6.7 | 80.7 | 12.6 | 16.1 | 65.3 | 2.3 | 0.1 | 12.4 | 3.9 |
| 6095252707 | 25.01 | 49.92 | 45-50% | 4753 | Solano | 13.3 | 72.1 | 14.6 | 21.2 | 41.1 | 19.5 | 0.3 | 11 | 6.8 |
| 6103000300 | 25.00 | 49.91 | 45-50% | 4515 | Tehama | 9.4 | 70.8 | 19.8 | 13.1 | 78.9 | 1.2 | 1.6 | 2.2 | 3 |
| 6083002706 | 25.00 | 49.89 | 45-50% | 6054 | Santa Barbara | 19.3 | 72.8 | 7.9 | 67 | 24.5 | 3.3 | 0.5 | 2.2 | 2.4 |
| 6037651102 | 24.98 | 49.88 | 45-50% | 3639 | Los Angeles | 8.7 | 65.8 | 25.5 | 12.6 | 47 | 2.4 | 0.1 | 33.9 | 4 |
| 6065041812 | 24.98 | 49.87 | 45-50% | 3319 | Riverside | 12.4 | 74.8 | 12.8 | 42.3 | 47.5 | 3.5 | 0.3 | 4.3 | 2.1 |
| 6067009109 | 24.97 | 49.85 | 45-50% | 4842 | Sacramento | 10.4 | 76.9 | 12.7 | 18 | 58.2 | 9.4 | 0.5 | 9.1 | 4.8 |
| 6065040814 | 24.97 | 49.84 | 45-50% | 4782 | Riverside | 15.8 | 80.2 | 4 | 35.9 | 32.8 | 12.9 | 0.3 | 13.6 | 4.6 |
| 6037401601 | 24.97 | 49.83 | 45-50% | 5034 | Los Angeles | 8.5 | 65.4 | 26.1 | 29 | 56.4 | 4.1 | 0.2 | 7.9 | 2.4 |
| 6067009610 | 24.97 | 49.82 | 45-50% | 6072 | Sacramento | 16.2 | 77.1 | 6.7 | 28.8 | 16.4 | 20.8 | 0.6 | 27.7 | 5.7 |
| 6001403501 | 24.96 | 49.80 | 45-50% | 4374 | Alameda | 6.7 | 75.1 | 18.2 | 10.1 | 31.3 | 27.9 | 0.4 | 24 | 6.3 |
| 6081606000 | 24.95 | 49.79 | 45-50% | 4959 | San Mateo | 13.3 | 74.7 | 12 | 44.2 | 35 | 2.1 | 0.2 | 15.8 | 2.7 |
| 6059099902 | 24.95 | 49.78 | 45-50% | 4486 | Orange | 13.1 | 77.3 | 9.6 | 29.6 | 39.2 | 1.2 | 0.3 | 26.4 | 3.2 |
| 6037310201 | 24.94 | 49.77 | 45-50% | 5466 | Los Angeles | 10.5 | 77.5 | 12 | 13.7 | 67.3 | 1.7 | 0 | 14 | 3.3 |
| 6001441926 | 24.93 | 49.75 | 45-50% | 4080 | Alameda | 16.5 | 77.3 | 6.2 | 32.2 | 19.2 | 4.4 | 0.4 | 37.7 | 6.1 |
| 6037128702 | 24.92 | 49.74 | 45-50% | 5639 | Los Angeles | 9.2 | 74.7 | 16.1 | 13.5 | 70.1 | 6 | 0.3 | 7 | 3.1 |
| 6037461300 | 24.91 | 49.73 | 45-50% | 6638 | Los Angeles | 10.7 | 73.1 | 16.2 | 17.5 | 62.4 | 6.7 | 0.1 | 8.8 | 4.5 |
| 6111008201 | 24.91 | 49.72 | 45-50% | 4315 | Ventura | 14.5 | 74.5 | 11 | 29.5 | 56.2 | 0.8 | 0.3 | 9.7 | 3.4 |
| 6085512509 | 24.91 | 49.70 | 45-50% | 4111 | Santa Clara | 15 | 75.9 | 9.1 | 54.1 | 36 | 1.5 | 0.3 | 6 | 2 |
| 6085506402 | 24.91 | 49.69 | 45-50% | 5733 | Santa Clara | 13.6 | 75.4 | 11 | 30.4 | 46.9 | 4.8 | 0.4 | 14 | 3.5 |
| 6067005508 | 24.91 | 49.68 | 45-50% | 3106 | Sacramento | 7.1 | 77 | 15.9 | 14.2 | 60.8 | 10.6 | 0.5 | 8.4 | 5.6 |
| 6073003004 | 24.90 | 49.67 | 45-50% | 4940 | San Diego | 17.8 | 76.4 | 5.8 | 70.7 | 6.6 | 15.8 | 0.1 | 4.5 | 2.2 |
| 6071000109 | 24.90 | 49.65 | 45-50% | 6752 | San Bernardino | 12 | 80.8 | 7.2 | 32.9 | 53 | 2.1 | 0.2 | 9.3 | 2.5 |
| 6053014201 | 24.88 | 49.64 | 45-50% | 5133 | Monterey | 13.8 | 72.8 | 13.4 | 32.4 | 31.7 | 6.1 | 0.4 | 21 | 8.5 |
| 6037400604 | 24.87 | 49.63 | 45-50% | 2980 | Los Angeles | 14.4 | 76.9 | 8.7 | 47.8 | 32 | 2.9 | 0.1 | 15.8 | 1.4 |
| 6037408212 | 24.86 | 49.62 | 45-50% | 4485 | Los Angeles | 10.4 | 73.7 | 15.9 | 28.6 | 12.3 | 1.7 | 0.1 | 55.6 | 1.7 |
| 6073013302 | 24.85 | 49.60 | 45-50% | 4933 | San Diego | 12.8 | 72.8 | 14.4 | 68.8 | 21.6 | 1.8 | 0.4 | 5.7 | 1.8 |
| 6013303201 | 24.84 | 49.59 | 45-50% | 9989 | Contra Costa | 16.4 | 77.7 | 5.9 | 23.8 | 41.4 | 14.4 | 0.3 | 14.6 | 5.5 |
| 6085504317 | 24.84 | 49.58 | 45-50% | 4429 | Santa Clara | 11 | 77.1 | 11.9 | 14.5 | 11.7 | 1.6 | 0.2 | 69.1 | 2.9 |
| 6065042726 | 24.84 | 49.56 | 45-50% | 5357 | Riverside | 21.2 | 72.9 | 5.9 | 40.2 | 46.7 | 4.5 | 0.2 | 4.9 | 3.5 |
| 6065043270 | 24.83 | 49.55 | 45-50% | 4991 | Riverside | 13.4 | 74.7 | 11.9 | 31.5 | 54.7 | 3.5 | 0.5 | 6 | 3.8 |
| 6067003900 | 24.83 | 49.54 | 45-50% | 3374 | Sacramento | 9.3 | 65.2 | 25.5 | 18.9 | 45.2 | 8.9 | 0.4 | 21.2 | 5.3 |
| 6037503302 | 24.81 | 49.53 | 45-50% | 6271 | Los Angeles | 14.1 | 78.3 | 7.6 | 73.1 | 19.5 | 1.5 | 0.3 | 4.6 | 1 |
| 6085512038 | 24.81 | 49.51 | 45-50% | 2847 | Santa Clara | 12.5 | 82.5 | 5 | 26.8 | 37.7 | 5.1 | 0.3 | 26.2 | 3.9 |
| 6029002821 | 24.80 | 49.50 | 45-50% | 4897 | Kern | 16.2 | 77.8 | 6 | 35.6 | 52.4 | 4.9 | 1 | 3.3 | 2.9 |
| 6037106645 | 24.79 | 49.49 | 45-50% | 3389 | Los Angeles | 9.6 | 68.5 | 21.9 | 16.1 | 63.5 | 3.4 | 0.1 | 14 | 3 |
| 6037408136 | 24.78 | 49.48 | 45-50% | 3849 | Los Angeles | 11.7 | 76.2 | 12.1 | 52.2 | 13 | 3.4 | 0.1 | 28.7 | 2.5 |
| 6073018610 | 24.78 | 49.46 | 45-50% | 7635 | San Diego | 17.4 | 74.3 | 8.3 | 56.6 | 25.6 | 5.4 | 0.2 | 8.6 | 3.7 |
| 6073018519 | 24.77 | 49.45 | 45-50% | 5891 | San Diego | 16.9 | 73.8 | 9.3 | 62.9 | 24 | 2.7 | 0.5 | 6.9 | 3 |
| 6065044702 | 24.77 | 49.44 | 45-50% | 2295 | Riverside | 14.5 | 76.9 | 8.6 | 82.2 | 10.4 | 2.4 | 0.3 | 3.9 | 0.8 |
| 6111001204 | 24.75 | 49.43 | 45-50% | 2473 | Ventura | 12.7 | 78.1 | 9.2 | 46.2 | 48.4 | 0.8 | 0.6 | 1.4 | 2.5 |
| 6037910504 | 24.74 | 49.41 | 45-50% | 4797 | Los Angeles | 19.5 | 74.6 | 5.9 | 67.9 | 16.4 | 11.6 | 0.3 | 2.1 | 1.7 |
| 6037401101 | 24.74 | 49.40 | 45-50% | 5663 | Los Angeles | 13 | 74.6 | 12.4 | 36.2 | 50.1 | 2.7 | 0.3 | 7.6 | 3 |
| 6059099224 | 24.74 | 49.39 | 45-50% | 3521 | Orange | 9.6 | 72.6 | 17.8 | 8.5 | 45.6 | 0.5 | 0.2 | 42.4 | 2.8 |
| 6059001501 | 24.73 | 49.38 | 45-50% | 6373 | Orange | 10.2 | 68.6 | 21.2 | 19.8 | 59.4 | 0.6 | 0.2 | 18.1 | 1.9 |
| 6081604400 | 24.72 | 49.36 | 45-50% | 4448 | San Mateo | 9.7 | 74.6 | 15.7 | 20.9 | 32.7 | 1.4 | 0.1 | 41.4 | 3.5 |
| 6037119310 | 24.72 | 49.35 | 45-50% | 3871 | Los Angeles | 13.6 | 73.3 | 13.1 | 68.9 | 11 | 4.2 | 0.1 | 14.5 | 1.3 |
| 6059075303 | 24.71 | 49.34 | 45-50% | 3412 | Orange | 12.1 | 72.7 | 15.2 | 42.2 | 49 | 1.3 | 0.1 | 5.2 | 2.1 |
| 6111007100 | 24.70 | 49.33 | 45-50% | 6335 | Ventura | 13.3 | 75.2 | 11.5 | 43.5 | 46.3 | 2.1 | 0.2 | 5.5 | 2.4 |
| 6045011500 | 24.68 | 49.31 | 45-50% | 6739 | Mendocino | 15.4 | 73.7 | 10.9 | 31.1 | 59.9 | 0.8 | 3.2 | 2 | 2.9 |
| 6077003114 | 24.66 | 49.30 | 45-50% | 10129 | San Joaquin | 12.4 | 76.4 | 11.2 | 17.2 | 47.4 | 5.7 | 0.3 | 25.4 | 3.9 |
| 6073020213 | 24.64 | 49.29 | 45-50% | 4028 | San Diego | 23.7 | 71.2 | 5.1 | 86.7 | 9.8 | 1.1 | 0 | 1.7 | 0.7 |
| 6075016100 | 24.64 | 49.27 | 45-50% | 5366 | San Francisco | 7.9 | 66.1 | 26 | 9.7 | 26.3 | 37.6 | 0.1 | 22.4 | 3.9 |

| | | | | | | | | | | | | | | | |
|---|---|---|---|---|---|---|---|---|---|---|---|---|---|---|---|
| 6037141201 | 24.62 | 49.26 | 45-50% | 3707 | Los Angeles | 10.6 | 81 | 8.4 | 16 | 67.4 | 6.7 | 0.1 | 6.5 | 3.4 |
| 6059052408 | 24.62 | 49.25 | 45-50% | 6154 | Orange | 9.9 | 76.8 | 13.3 | 12.3 | 71.8 | 1.9 | 0.2 | 10.7 | 3.2 |
| 6029000902 | 24.62 | 49.24 | 45-50% | 3340 | Kern | 15.4 | 70.3 | 14.3 | 47.5 | 43.1 | 4.6 | 1.2 | 2.5 | 1.3 |
| 6081607701 | 24.62 | 49.22 | 45-50% | 3954 | San Mateo | 12.6 | 77.7 | 9.7 | 36 | 29.6 | 2 | 0.1 | 28 | 4.2 |
| 6037403316 | 24.61 | 49.21 | 45-50% | 6783 | Los Angeles | 10 | 76 | 14 | 27.3 | 29.1 | 6.9 | 0.1 | 34.1 | 2.4 |
| 6029002818 | 24.61 | 49.20 | 45-50% | 3761 | Kern | 11.5 | 76.2 | 12.3 | 25.8 | 60.3 | 6.3 | 1 | 3.8 | 2.8 |
| 6001441602 | 24.61 | 49.19 | 45-50% | 6802 | Alameda | 13.9 | 76.7 | 9.4 | 24.7 | 27.2 | 5.5 | 0.2 | 37.2 | 5.2 |
| 6065041911 | 24.60 | 49.17 | 45-50% | 10258 | Riverside | 16.4 | 72.9 | 10.7 | 26 | 48.7 | 7.2 | 0.3 | 14.4 | 3.3 |
| 6071002028 | 24.60 | 49.16 | 45-50% | 5282 | San Bernardino | 14.7 | 79.4 | 5.9 | 39 | 43.4 | 9.4 | 0.3 | 5.3 | 2.6 |
| 6037189903 | 24.60 | 49.15 | 45-50% | 2164 | Los Angeles | 2.4 | 87.3 | 10.3 | 8.4 | 77.3 | 4.5 | 0.1 | 6.1 | 3.5 |
| 6071000818 | 24.60 | 49.14 | 45-50% | 5428 | San Bernardino | 10 | 74 | 16 | 29.8 | 56.6 | 5.6 | 0.1 | 5.6 | 2.2 |
| 6037463101 | 24.59 | 49.12 | 45-50% | 2383 | Los Angeles | 10.6 | 75.8 | 13.6 | 34.6 | 34.8 | 3.1 | 0.6 | 24 | 2.9 |
| 6059075902 | 24.59 | 49.11 | 45-50% | 6548 | Orange | 11.4 | 78 | 10.6 | 40.8 | 50.7 | 1.3 | 0.2 | 4.6 | 2.4 |
| 6089010500 | 24.58 | 49.10 | 45-50% | 4928 | Shasta | 14.1 | 73.2 | 12.7 | 9.6 | 79.1 | 2 | 2.5 | 2.4 | 4.4 |
| 6037297500 | 24.58 | 49.09 | 45-50% | 5163 | Los Angeles | 11.4 | 73 | 15.6 | 28.4 | 59.5 | 3.6 | 0.2 | 4.6 | 3.7 |
| 6037462800 | 24.58 | 49.07 | 45-50% | 2915 | Los Angeles | 12.2 | 76.7 | 11.1 | 32.7 | 40.6 | 8.7 | 0.2 | 14.7 | 3.1 |
| 6109005100 | 24.57 | 49.06 | 45-50% | 8355 | Tuolumne | 9.1 | 68.9 | 22 | 10.2 | 83.7 | 0.4 | 1.7 | 0.8 | 3.1 |
| 6037214503 | 24.55 | 49.05 | 45-50% | 3325 | Los Angeles | 14.2 | 75.1 | 10.7 | 6.3 | 39.5 | 4.9 | 0.1 | 46 | 3.2 |
| 6019005801 | 24.55 | 49.04 | 45-50% | 4856 | Fresno | 11.6 | 75.8 | 12.6 | 29 | 56.3 | 3 | 1.1 | 8 | 2.6 |
| 6001435602 | 24.55 | 49.02 | 45-50% | 5329 | Alameda | 15 | 76.2 | 8.8 | 52.5 | 23.8 | 9.9 | 0.4 | 11.2 | 2.3 |
| 6037113102 | 24.54 | 49.01 | 45-50% | 2828 | Los Angeles | 6.6 | 72.6 | 20.8 | 13 | 66.8 | 3.3 | 0 | 13.8 | 3 |
| 6059099204 | 24.53 | 49.00 | 45-50% | 4729 | Orange | 10.2 | 72.1 | 17.7 | 12.6 | 22.4 | 0.6 | 0 | 62.9 | 1.4 |
| 6037405600 | 24.53 | 48.98 | 45-50% | 5428 | Los Angeles | 11.6 | 72.9 | 15.5 | 58.8 | 22 | 2.8 | 0.1 | 15.4 | 1 |
| 6053011202 | 24.53 | 48.97 | 45-50% | 6868 | Monterey | 21.8 | 73.1 | 5.1 | 88.1 | 7.5 | 1.2 | 0.4 | 1.6 | 1.1 |
| 6073014001 | 24.52 | 48.96 | 45-50% | 4630 | San Diego | 12.7 | 76.2 | 11.1 | 39.5 | 40.8 | 8.3 | 0.5 | 7.3 | 3.6 |
| 6001406602 | 24.52 | 48.95 | 45-50% | 2493 | Alameda | 13.2 | 78.9 | 7.9 | 29.6 | 11.1 | 26 | 0.9 | 28.4 | 4 |
| 6073013303 | 24.52 | 48.93 | 45-50% | 4909 | San Diego | 12.5 | 71.5 | 16 | 75.2 | 15.2 | 2.2 | 0.5 | 5.3 | 1.5 |
| 6059099226 | 24.52 | 48.92 | 45-50% | 3889 | Orange | 10.2 | 71.5 | 18.3 | 13 | 30.1 | 0.7 | 0.3 | 53.6 | 2.3 |
| 6001408300 | 24.52 | 48.91 | 45-50% | 4167 | Alameda | 11.5 | 77.5 | 11 | 16.2 | 24 | 45 | 0.4 | 8.7 | 5.7 |
| 6073009400 | 24.51 | 48.90 | 45-50% | 5028 | San Diego | 12.7 | 87.2 | 0.1 | 20.4 | 59.3 | 9.4 | 1.1 | 5 | 4.8 |
| 6073002601 | 24.49 | 48.88 | 45-50% | 6148 | San Diego | 18.5 | 76.6 | 4.9 | 70.9 | 6.1 | 4.1 | 0.1 | 17.6 | 1.2 |
| 6037141202 | 24.47 | 48.87 | 45-50% | 2800 | Los Angeles | 10.9 | 76.7 | 12.4 | 9 | 77.9 | 3.8 | 0 | 5.2 | 4 |
| 6037189500 | 24.46 | 48.86 | 45-50% | 4452 | Los Angeles | 4.1 | 87.3 | 8.6 | 12.7 | 72.2 | 4.6 | 0.3 | 6.2 | 4.1 |
| 6037137402 | 24.45 | 48.85 | 45-50% | 5364 | Los Angeles | 10 | 67 | 23 | 7.7 | 76.4 | 4.7 | 0.1 | 6.2 | 5 |
| 6075025701 | 24.45 | 48.83 | 45-50% | 4788 | San Francisco | 9.4 | 75.9 | 14.7 | 22.4 | 11.6 | 3.3 | 0.1 | 60.8 | 1.8 |
| 6107001400 | 24.45 | 48.82 | 45-50% | 5581 | Tulare | 16 | 73.3 | 10.7 | 49.9 | 45.8 | 0.3 | 0.6 | 1.6 | 1.8 |
| 6067009611 | 24.44 | 48.81 | 45-50% | 3165 | Sacramento | 14.2 | 77 | 8.8 | 22 | 42.3 | 14.5 | 0.2 | 14.2 | 6.8 |
| 6037181400 | 24.44 | 48.80 | 45-50% | 4302 | Los Angeles | 9.4 | 75.9 | 14.7 | 35.7 | 29.3 | 2.3 | 0.2 | 29.7 | 2.7 |
| 6067008705 | 24.43 | 48.78 | 45-50% | 4397 | Sacramento | 20 | 75.6 | 4.4 | 11.1 | 45.2 | 6.7 | 0.3 | 31.6 | 5.2 |
| 6077005502 | 24.43 | 48.77 | 45-50% | 1806 | San Joaquin | 13.8 | 77 | 9.2 | 35.2 | 50.7 | 3.3 | 0.3 | 7.3 | 3.2 |
| 6073020308 | 24.43 | 48.76 | 45-50% | 5743 | San Diego | 11.8 | 65 | 23.2 | 35.5 | 50.5 | 3.9 | 0.2 | 6.9 | 3 |
| 6073020403 | 24.43 | 48.75 | 45-50% | 4107 | San Diego | 12.9 | 74.8 | 12.3 | 40.2 | 48.8 | 1.4 | 0.7 | 7 | 1.9 |
| 6059063902 | 24.42 | 48.73 | 45-50% | 6670 | Orange | 10.8 | 82.9 | 6.3 | 32.1 | 48.4 | 2 | 0.3 | 13.2 | 4.1 |
| 6067007016 | 24.42 | 48.72 | 45-50% | 5537 | Sacramento | 18.6 | 77 | 4.4 | 22 | 28.2 | 14 | 0.4 | 28.5 | 6.8 |
| 6023001300 | 24.41 | 48.71 | 45-50% | 1479 | Humboldt | 10.7 | 80.9 | 8.4 | 9.3 | 80.1 | 1.1 | 2.6 | 0.5 | 6.4 |
| 6109004100 | 24.40 | 48.69 | 45-50% | 5358 | Tuolumne | 8.1 | 62.5 | 29.4 | 7.8 | 87.8 | 0.2 | 0.9 | 1.2 | 2 |
| 6037600703 | 24.40 | 48.68 | 45-50% | 1914 | Los Angeles | 7.5 | 69.8 | 22.7 | 3.4 | 1.9 | 89.8 | 0.2 | 1 | 3.7 |
| 6103000400 | 24.40 | 48.67 | 45-50% | 5508 | Tehama | 9.5 | 69.9 | 20.6 | 9.5 | 85.2 | 0.3 | 1.4 | 1 | 2.5 |
| 6073002801 | 24.39 | 48.66 | 45-50% | 3068 | San Diego | 3 | 87.4 | 9.6 | 14.7 | 65.4 | 3.4 | 0.2 | 11.4 | 4.9 |
| 6099003907 | 24.39 | 48.64 | 45-50% | 7460 | Stanislaus | 10 | 65.9 | 24.1 | 16.1 | 75.8 | 1.2 | 0.3 | 3.6 | 3 |
| 6073001600 | 24.39 | 48.63 | 45-50% | 5651 | San Diego | 13.5 | 82 | 4.5 | 54 | 24.5 | 12.4 | 0.3 | 5.6 | 3.1 |
| 6065041805 | 24.39 | 48.62 | 45-50% | 5799 | Riverside | 14.6 | 80.3 | 5.1 | 44.4 | 39.5 | 4.7 | 0.3 | 8.3 | 2.8 |
| 6037920313 | 24.39 | 48.61 | 45-50% | 6010 | Los Angeles | 12.7 | 76.6 | 10.7 | 35.5 | 54.9 | 1.5 | 0.3 | 5.4 | 2.3 |
| 6067004001 | 24.38 | 48.59 | 45-50% | 5755 | Sacramento | 10.3 | 65.9 | 23.8 | 18.1 | 36.1 | 13.9 | 0.7 | 26 | 5.2 |
| 6007003200 | 24.38 | 48.58 | 45-50% | 4234 | Butte | 13.4 | 68.6 | 18 | 26.1 | 60.5 | 0.6 | 3.9 | 4.1 | 4.8 |
| 6037621204 | 24.37 | 48.57 | 45-50% | 3230 | Los Angeles | 4.3 | 77.5 | 18.2 | 9.8 | 71.2 | 2.2 | 0.3 | 13.7 | 2.7 |
| 6029003306 | 24.36 | 48.56 | 45-50% | 4897 | Kern | 10 | 72.7 | 17.3 | 17.6 | 76.5 | 0.9 | 1 | 1.6 | 2.3 |
| 6111004710 | 24.36 | 48.54 | 45-50% | 5089 | Ventura | 16.8 | 73.6 | 9.6 | 70.6 | 11.6 | 2.5 | 0.2 | 13.4 | 1.8 |
| 6037139001 | 24.35 | 48.53 | 45-50% | 4767 | Los Angeles | 13 | 73.7 | 13.3 | 17.9 | 66.1 | 4.6 | 0.2 | 6.7 | 4.6 |
| 6001423300 | 24.35 | 48.52 | 45-50% | 3647 | Alameda | 10.7 | 74.5 | 14.8 | 14.9 | 36 | 33.8 | 0.3 | 9.1 | 5.9 |
| 6085504803 | 24.34 | 48.51 | 45-50% | 5756 | Santa Clara | 14.4 | 75 | 10.6 | 17.3 | 25.7 | 2.3 | 0.2 | 51.5 | 3 |
| 6065044403 | 24.30 | 48.49 | 45-50% | 4402 | Riverside | 10.7 | 72.8 | 16.5 | 30.2 | 60.7 | 0.5 | 5.1 | 1.1 | 2.4 |
| 6073010502 | 24.30 | 48.48 | 45-50% | 5514 | San Diego | 16.8 | 76.7 | 6.5 | 58.5 | 27.8 | 4.5 | 0.3 | 5.7 | 3.3 |
| 6037800327 | 24.30 | 48.47 | 45-50% | 5305 | Los Angeles | 10.7 | 78.3 | 11 | 16.4 | 71.9 | 1.9 | 0.1 | 6.7 | 3 |
| 6095250400 | 24.29 | 48.46 | 45-50% | 3087 | Solano | 13.1 | 77.2 | 9.7 | 27 | 41.4 | 14.8 | 0.9 | 9.9 | 6.1 |
| 6059076201 | 24.28 | 48.44 | 45-50% | 6772 | Orange | 11.3 | 78 | 10.7 | 28.4 | 50.6 | 2 | 0.1 | 16.9 | 2.1 |

| | | | | | | | | | | | | | | |
|---|---|---|---|---|---|---|---|---|---|---|---|---|---|---|
| 6067009314 | 24.28 | 48.43 | 45-50% | 5922 | Sacramento | 15.8 | 76.7 | 7.5 | 16.7 | 33 | 12.8 | 0.3 | 31.2 | 5.9 |
| 6013355107 | 24.28 | 48.42 | 45-50% | 5048 | Contra Costa | 13 | 78.6 | 8.4 | 26.7 | 47.2 | 10.4 | 0.5 | 10.3 | 5 |
| 6071010019 | 24.28 | 48.40 | 45-50% | 5235 | San Bernardino | 16 | 73.3 | 10.7 | 47.6 | 43.6 | 4.5 | 0.5 | 1.5 | 2.4 |
| 6037702201 | 24.27 | 48.39 | 45-50% | 4483 | Los Angeles | 9.7 | 78.5 | 11.8 | 12.5 | 69 | 3.3 | 0.2 | 10.7 | 4.3 |
| 6037900704 | 24.27 | 48.38 | 45-50% | 3050 | Los Angeles | 19.5 | 76.4 | 4.1 | 34.1 | 28.3 | 28.9 | 0.4 | 4.6 | 3.6 |
| 6037113303 | 24.27 | 48.37 | 45-50% | 4006 | Los Angeles | 10.1 | 73.3 | 16.6 | 29.1 | 50.4 | 3.3 | 0.4 | 14.4 | 2.4 |
| 6037124000 | 24.27 | 48.35 | 45-50% | 4550 | Los Angeles | 10.8 | 74.8 | 14.4 | 12.1 | 76.5 | 3.5 | 0.1 | 4.4 | 3.4 |
| 6085504506 | 24.26 | 48.34 | 45-50% | 5924 | Santa Clara | 15.7 | 74.4 | 9.9 | 10.1 | 14.4 | 2.3 | 0.2 | 69.3 | 3.5 |
| 6037143602 | 24.25 | 48.33 | 45-50% | 4260 | Los Angeles | 8.7 | 74.4 | 16.9 | 8.2 | 77.3 | 4.1 | 0.3 | 7.1 | 3.1 |
| 6059032022 | 24.25 | 48.32 | 45-50% | 6833 | Orange | 12.9 | 78.4 | 8.7 | 45.8 | 43.3 | 1.5 | 0.2 | 6.3 | 2.8 |
| 6067005903 | 24.25 | 48.30 | 45-50% | 2277 | Sacramento | 10.7 | 79.7 | 9.6 | 14.4 | 63.7 | 11.2 | 0.7 | 3.6 | 6.3 |
| 6111008302 | 24.24 | 48.29 | 45-50% | 5380 | Ventura | 11.1 | 73.9 | 15 | 21.5 | 66.1 | 1.3 | 0.5 | 7.7 | 2.9 |
| 6013359102 | 24.24 | 48.28 | 45-50% | 5159 | Contra Costa | 11.1 | 76.1 | 12.8 | 24.8 | 27.5 | 17.6 | 0.4 | 25 | 4.7 |
| 6071008500 | 24.24 | 48.27 | 45-50% | 8316 | San Bernardino | 9.6 | 70.3 | 20.1 | 12.4 | 75.6 | 1.2 | 0.3 | 7.3 | 3.2 |
| 6037113232 | 24.24 | 48.25 | 45-50% | 3894 | Los Angeles | 8.6 | 72.2 | 19.2 | 17.8 | 61.1 | 4 | 0.2 | 13.5 | 3.4 |
| 6013360101 | 24.24 | 48.24 | 45-50% | 4576 | Contra Costa | 9.8 | 72.4 | 17.8 | 18.8 | 43.1 | 9.7 | 0.2 | 22.3 | 5.8 |
| 6023001101 | 24.24 | 48.23 | 45-50% | 6350 | Humboldt | 9.5 | 79.5 | 11 | 9.1 | 79.9 | 1.5 | 2.4 | 1.7 | 5.3 |
| 6065050600 | 24.24 | 48.22 | 45-50% | 6850 | Riverside | 11.4 | 78.5 | 10.1 | 23.3 | 66.1 | 3.2 | 0.4 | 4.1 | 2.9 |
| 6033001000 | 24.23 | 48.20 | 45-50% | 6045 | Lake | 12 | 71.9 | 16.1 | 32.6 | 59.6 | 0.7 | 4.2 | 0.8 | 2.1 |
| 6041112100 | 24.23 | 48.19 | 45-50% | 4315 | Marin | 11.8 | 76.8 | 11.4 | 26.1 | 64 | 1.5 | 0.2 | 4.7 | 3.5 |
| 6085504311 | 24.21 | 48.18 | 45-50% | 7062 | Santa Clara | 14.5 | 76.3 | 9.2 | 7.7 | 8.1 | 1.7 | 0 | 80.3 | 2.1 |
| 6075011300 | 24.21 | 48.16 | 45-50% | 3143 | San Francisco | 5.6 | 63.6 | 30.8 | 2.4 | 15.7 | 0.8 | 0 | 80 | 1.2 |
| 6037503802 | 24.20 | 48.15 | 45-50% | 5054 | Los Angeles | 11.6 | 77 | 11.4 | 39.6 | 33.1 | 1.2 | 0.3 | 23.7 | 2.1 |
| 6001405800 | 24.20 | 48.14 | 45-50% | 3965 | Alameda | 14 | 77.2 | 8.8 | 18.4 | 6.2 | 19.4 | 0.4 | 53.4 | 2.4 |
| 6059099202 | 24.20 | 48.13 | 45-50% | 8323 | Orange | 13.5 | 77.8 | 8.7 | 54.2 | 11.1 | 0.8 | 0.4 | 32 | 1.5 |
| 6073013102 | 24.20 | 48.11 | 45-50% | 6487 | San Diego | 15.1 | 74.1 | 10.8 | 75.4 | 14.6 | 4.3 | 0.4 | 3.7 | 1.6 |
| 6037124600 | 24.19 | 48.10 | 45-50% | 3123 | Los Angeles | 11.6 | 75.1 | 13.3 | 15.5 | 69 | 4.3 | 0.1 | 7.7 | 3.3 |
| 6115040303 | 24.19 | 48.09 | 45-50% | 6555 | Yuba | 19.3 | 74.1 | 6.6 | 28 | 46.5 | 5 | 0.9 | 14.9 | 4.7 |
| 6037700502 | 24.19 | 48.08 | 45-50% | 4246 | Los Angeles | 1.4 | 86.9 | 11.7 | 9.9 | 78 | 3.3 | 0.1 | 5.9 | 2.8 |
| 6101050402 | 24.18 | 48.06 | 45-50% | 3970 | Sutter | 17.6 | 70.6 | 11.8 | 20.3 | 56.6 | 2.3 | 0.4 | 16.7 | 3.8 |
| 6037920328 | 24.18 | 48.05 | 45-50% | 1990 | Los Angeles | 10.8 | 83 | 6.2 | 13.3 | 68.1 | 4 | 0.3 | 10.7 | 3.7 |
| 6073013309 | 24.17 | 48.04 | 45-50% | 7005 | San Diego | 12.9 | 75.4 | 11.7 | 56.6 | 22.7 | 2.7 | 0.2 | 14.2 | 3.6 |
| 6073015703 | 24.17 | 48.03 | 45-50% | 7102 | San Diego | 16 | 72 | 12 | 28.9 | 54.1 | 6.5 | 0.2 | 3.9 | 6.3 |
| 6001435800 | 24.17 | 48.01 | 45-50% | 5382 | Alameda | 13.2 | 76.3 | 10.5 | 37.9 | 29.8 | 4.6 | 0.3 | 24.3 | 3.1 |
| 6071009911 | 24.17 | 48.00 | 45-50% | 6456 | San Bernardino | 15.6 | 76.1 | 8.3 | 46.3 | 33.2 | 12.3 | 0.6 | 4.8 | 2.9 |
| 6037137103 | 24.16 | 47.99 | 45-50% | 4199 | Los Angeles | 8.8 | 78.7 | 12.5 | 11.7 | 61.4 | 5.8 | 0.3 | 16 | 4.8 |
| 6029005700 | 24.16 | 47.98 | 45-50% | 2226 | Kern | 27.7 | 71.9 | 0.4 | 17.2 | 64.2 | 7.5 | 0.7 | 4.5 | 5.8 |
| 6001437702 | 24.16 | 47.96 | 45-50% | 4256 | Alameda | 22.5 | 74.6 | 2.9 | 69.8 | 5.7 | 8.2 | 0.2 | 13 | 3.1 |
| 6059088901 | 24.15 | 47.95 | 45-50% | 6725 | Orange | 11.4 | 76 | 12.6 | 17.1 | 13 | 0.8 | 0.1 | 67 | 2 |
| 6021010200 | 24.14 | 47.94 | 45-50% | 4901 | Glenn | 14.5 | 69.7 | 15.8 | 32.1 | 63 | 0.4 | 1.2 | 1.2 | 2.1 |
| 6001423400 | 24.14 | 47.93 | 45-50% | 4685 | Alameda | 10.9 | 79.5 | 9.6 | 15.8 | 41.1 | 25.1 | 0.2 | 10.9 | 7 |
| 6111007700 | 24.12 | 47.91 | 45-50% | 5988 | Ventura | 14.8 | 74.7 | 10.5 | 34.6 | 50.4 | 1.3 | 0.3 | 10 | 3.4 |
| 6067007903 | 24.11 | 47.90 | 45-50% | 4576 | Sacramento | 10 | 68 | 22 | 11.2 | 76 | 4.2 | 0.5 | 4.5 | 3.6 |
| 6059110301 | 24.11 | 47.89 | 45-50% | 6729 | Orange | 11.2 | 76.7 | 12.1 | 28 | 34.8 | 3.8 | 0.2 | 30.4 | 2.7 |
| 6037575002 | 24.10 | 47.87 | 45-50% | 4627 | Los Angeles | 8.7 | 77.6 | 13.7 | 26.3 | 46.1 | 9.7 | 0.3 | 13.4 | 4.1 |
| 6037609900 | 24.10 | 47.86 | 45-50% | 2034 | Los Angeles | 11.6 | 70.6 | 17.8 | 55.3 | 29.7 | 6.4 | 0.4 | 5.3 | 2.9 |
| 6065045224 | 24.08 | 47.85 | 45-50% | 5471 | Riverside | 15.9 | 74.6 | 9.5 | 59.3 | 35.8 | 1.2 | 0.2 | 2.3 | 1.1 |
| 6037183104 | 24.07 | 47.84 | 45-50% | 2065 | Los Angeles | 11.3 | 74.7 | 14 | 52.3 | 22.5 | 2.6 | 0.2 | 19.9 | 2.5 |
| 6037143800 | 24.07 | 47.82 | 45-50% | 4878 | Los Angeles | 10.3 | 74.8 | 14.9 | 7.3 | 79 | 3.7 | 0.1 | 6.4 | 3.4 |
| 6059099411 | 24.07 | 47.81 | 45-50% | 5500 | Orange | 12.4 | 81.9 | 5.7 | 32.9 | 48.7 | 2.3 | 0.3 | 11.7 | 4 |
| 6073020206 | 24.07 | 47.80 | 45-50% | 5217 | San Diego | 19 | 76 | 5 | 76.6 | 17.3 | 2.2 | 0.2 | 2.5 | 1.2 |
| 6037910404 | 24.06 | 47.79 | 45-50% | 4130 | Los Angeles | 18.4 | 76.9 | 4.7 | 63 | 18.5 | 13.2 | 0.3 | 2.6 | 2.3 |
| 6085504700 | 24.05 | 47.77 | 45-50% | 719 | Santa Clara | 28.3 | 70.9 | 0.8 | 22.9 | 49.5 | 13.8 | 1 | 7.1 | 5.7 |
| 6095252314 | 24.04 | 47.76 | 45-50% | 4113 | Solano | 11.4 | 73.7 | 14.9 | 22.4 | 40.1 | 14.7 | 0.7 | 14.2 | 8 |
| 6071010424 | 24.02 | 47.75 | 45-50% | 1966 | San Bernardino | 4.7 | 68.5 | 26.8 | 8.7 | 85.8 | 1.3 | 1.2 | 0.7 | 2.3 |
| 6073019002 | 24.02 | 47.74 | 45-50% | 1759 | San Diego | 11 | 75.6 | 13.4 | 42.5 | 51.6 | 1 | 0.3 | 3.4 | 1.3 |
| 6037400800 | 24.01 | 47.72 | 45-50% | 3967 | Los Angeles | 4.3 | 83.8 | 11.9 | 17.6 | 65.3 | 3 | 0.2 | 9.5 | 4.3 |
| 6085504504 | 24.01 | 47.71 | 45-50% | 9882 | Santa Clara | 12.7 | 83.2 | 4.1 | 20.7 | 12.6 | 5.4 | 0.3 | 58.2 | 2.7 |
| 6059011711 | 24.00 | 47.70 | 45-50% | 7305 | Orange | 13.3 | 79.4 | 7.3 | 48.7 | 31.6 | 2.9 | 0.3 | 13.9 | 2.7 |
| 6081601502 | 24.00 | 47.69 | 45-50% | 5125 | San Mateo | 11.9 | 73.7 | 14.4 | 27.1 | 10.2 | 4.9 | 0.1 | 54.6 | 3.1 |
| 6095253204 | 24.00 | 47.67 | 45-50% | 7098 | Solano | 16 | 77.1 | 6.9 | 36.1 | 47.3 | 6.2 | 0.4 | 5.8 | 4.2 |
| 6065050500 | 24.00 | 47.66 | 45-50% | 13261 | Riverside | 17.9 | 76.6 | 5.5 | 30.7 | 42.5 | 7.5 | 0.4 | 14.2 | 4.8 |
| 6073019404 | 23.99 | 47.65 | 45-50% | 3984 | San Diego | 18.4 | 76.4 | 5.2 | 80.7 | 14.8 | 0.7 | 0.2 | 1.7 | 1.8 |
| 6001409900 | 23.99 | 47.64 | 45-50% | 3308 | Alameda | 8.8 | 70 | 21.2 | 8.1 | 26.8 | 53.1 | 0.2 | 7.6 | 4.3 |
| 6037272302 | 23.98 | 47.62 | 45-50% | 4074 | Los Angeles | 10.6 | 77.9 | 11.5 | 50.1 | 33.9 | 4.6 | 0.3 | 8.8 | 2.4 |
| 6037401201 | 23.98 | 47.61 | 45-50% | 3110 | Los Angeles | 11 | 76.1 | 12.9 | 25.7 | 61.5 | 1.6 | 0.3 | 8.2 | 2.7 |

| | | | | | | | | | | | | | | |
|---|---|---|---|---|---|---|---|---|---|---|---|---|---|---|
| 6085504101 | 23.98 | 47.60 | 45-50% | 4273 | Santa Clara | 14.1 | 78 | 7.9 | 63 | 14.3 | 1.9 | 1 | 18.2 | 1.5 |
| 6037702002 | 23.98 | 47.58 | 45-50% | 5700 | Los Angeles | 6.1 | 82.6 | 11.3 | 11.9 | 74.4 | 4.5 | 0.4 | 5.4 | 3.5 |
| 6037571504 | 23.97 | 47.57 | 45-50% | 4699 | Los Angeles | 11.9 | 79.3 | 8.8 | 28.9 | 27.9 | 21.2 | 0.2 | 18 | 3.7 |
| 6067009633 | 23.97 | 47.56 | 45-50% | 3309 | Sacramento | 17.5 | 76.5 | 6 | 33.2 | 11.3 | 25.1 | 0.2 | 23.4 | 6.9 |
| 6073001800 | 23.95 | 47.55 | 45-50% | 5319 | San Diego | 11.4 | 83.8 | 4.8 | 40 | 38.9 | 12.6 | 0.3 | 4.4 | 3.8 |
| 6031000701 | 23.95 | 47.53 | 45-50% | 5321 | Kings | 13 | 73.6 | 13.4 | 28.8 | 63.1 | 2.3 | 0.6 | 2.8 | 2.4 |
| 6037910706 | 23.94 | 47.52 | 45-50% | 6022 | Los Angeles | 18.9 | 76.6 | 4.5 | 69.3 | 10.9 | 14.5 | 0.2 | 3.4 | 1.8 |
| 6037920115 | 23.94 | 47.51 | 45-50% | 4149 | Los Angeles | 13.4 | 79.5 | 7.1 | 15.3 | 63.5 | 2.9 | 0.2 | 15 | 3.1 |
| 6075060502 | 23.94 | 47.50 | 45-50% | 3216 | San Francisco | 20.5 | 72.4 | 7.1 | 26.1 | 4.2 | 29.2 | 0.2 | 36.6 | 3.7 |
| 6071011500 | 23.93 | 47.48 | 45-50% | 1890 | San Bernardino | 8.9 | 79 | 12.1 | 15.8 | 76 | 2.8 | 0.6 | 1 | 3.8 |
| 6065043222 | 23.93 | 47.47 | 45-50% | 3842 | Riverside | 9.6 | 77 | 13.4 | 18 | 72.7 | 1.7 | 1.1 | 4.7 | 1.8 |
| 6037920037 | 23.92 | 47.46 | 45-50% | 7131 | Los Angeles | 19.7 | 77.2 | 3.1 | 58.4 | 22 | 10.4 | 0.4 | 6 | 2.8 |
| 6107001501 | 23.91 | 47.45 | 45-50% | 5258 | Tulare | 17 | 70 | 13 | 38.1 | 56.5 | 0.5 | 0.9 | 1.7 | 2.3 |
| 6071002016 | 23.91 | 47.43 | 45-50% | 3883 | San Bernardino | 12.4 | 78.9 | 8.7 | 38 | 51.6 | 2.6 | 0.4 | 4.8 | 2.6 |
| 6013303204 | 23.91 | 47.42 | 45-50% | 4182 | Contra Costa | 13.6 | 73 | 13.4 | 27.7 | 60 | 3.3 | 0.5 | 4.1 | 4.3 |
| 6087122500 | 23.91 | 47.41 | 45-50% | 6670 | Santa Cruz | 17.1 | 75.1 | 7.8 | 76.4 | 17.4 | 0.6 | 0.3 | 3.5 | 1.8 |
| 6075020800 | 23.90 | 47.40 | 45-50% | 6577 | San Francisco | 7 | 84.2 | 8.8 | 50.9 | 31 | 2.1 | 0.3 | 13.2 | 2.5 |
| 6053014800 | 23.89 | 47.38 | 45-50% | 6112 | Monterey | 20 | 74.8 | 5.2 | 84.9 | 11.7 | 0.4 | 0.2 | 1.6 | 1.2 |
| 6073008360 | 23.89 | 47.37 | 45-50% | 5857 | San Diego | 11.4 | 79.4 | 9.2 | 20 | 29.9 | 6.3 | 0.2 | 38.1 | 5.6 |
| 6037920102 | 23.89 | 47.36 | 45-50% | 5668 | Los Angeles | 14.3 | 78 | 7.7 | 30.2 | 53.6 | 3.4 | 0.4 | 9.2 | 3.2 |
| 6073003201 | 23.88 | 47.35 | 45-50% | 4932 | San Diego | 20.4 | 70.6 | 9 | 29.8 | 19.9 | 12 | 0.3 | 32.5 | 5.4 |
| 6073021000 | 23.87 | 47.33 | 45-50% | 4440 | San Diego | 8.9 | 59.8 | 31.3 | 34.4 | 63.1 | 0.4 | 0.9 | 0.5 | 0.7 |
| 6097154201 | 23.86 | 47.32 | 45-50% | 3925 | Sonoma | 13.2 | 74.7 | 12.1 | 43.4 | 52 | 0.7 | 1.7 | 0.9 | 1.5 |
| 6067004906 | 23.85 | 47.31 | 45-50% | 2797 | Sacramento | 15.3 | 75.1 | 9.6 | 25.2 | 15.6 | 27.6 | 0.4 | 27.5 | 3.8 |
| 6071010409 | 23.85 | 47.29 | 45-50% | 3018 | San Bernardino | 11.3 | 72.8 | 15.9 | 15.9 | 71 | 4.2 | 1.3 | 2.7 | 5 |
| 6037920043 | 23.85 | 47.28 | 45-50% | 5711 | Los Angeles | 17.4 | 77.1 | 5.5 | 23.4 | 43.3 | 5.2 | 0.2 | 24.7 | 3.2 |
| 6045010400 | 23.84 | 47.27 | 45-50% | 3467 | Mendocino | 11.3 | 74.2 | 14.5 | 25 | 69.1 | 0.3 | 1.2 | 1.3 | 3.1 |
| 6065044104 | 23.84 | 47.26 | 45-50% | 2647 | Riverside | 12.3 | 75 | 12.7 | 40 | 49.9 | 4.2 | 1.2 | 2.8 | 1.9 |
| 6059110106 | 23.83 | 47.24 | 45-50% | 3577 | Orange | 11.1 | 76.4 | 12.5 | 14.4 | 53.1 | 3.4 | 0 | 25.4 | 3.7 |
| 6085505303 | 23.83 | 47.23 | 45-50% | 5940 | Santa Clara | 14.3 | 77.5 | 8.2 | 29.1 | 25.7 | 2.3 | 0.1 | 39.1 | 3.7 |
| 6085503211 | 23.82 | 47.22 | 45-50% | 4744 | Santa Clara | 13.3 | 76.2 | 10.5 | 38.3 | 9.9 | 2.2 | 0.4 | 47.8 | 1.5 |
| 6037212502 | 23.82 | 47.21 | 45-50% | 2767 | Los Angeles | 7.5 | 83.5 | 9 | 35.3 | 8.8 | 5 | 0.1 | 49.1 | 1.7 |
| 6071009708 | 23.81 | 47.19 | 45-50% | 5221 | San Bernardino | 12.3 | 74.1 | 13.6 | 21.1 | 71.4 | 2.9 | 0.7 | 1.6 | 2.4 |
| 6037106111 | 23.81 | 47.18 | 45-50% | 4334 | Los Angeles | 11.4 | 78.4 | 10.2 | 58.9 | 27.5 | 4.6 | 0.3 | 7.2 | 1.5 |
| 6001405301 | 23.80 | 47.17 | 45-50% | 2603 | Alameda | 7 | 84.2 | 8.8 | 14.2 | 41.3 | 23.2 | 0.5 | 14.8 | 5.9 |
| 6073016100 | 23.80 | 47.16 | 45-50% | 5788 | San Diego | 11.4 | 74.3 | 14.3 | 18.7 | 70.6 | 3.1 | 0.7 | 3.5 | 3.5 |
| 6029005401 | 23.80 | 47.14 | 45-50% | 6099 | Kern | 12 | 70 | 18 | 16 | 72.9 | 2.5 | 0.9 | 4.9 | 2.8 |
| 6037501600 | 23.79 | 47.13 | 45-50% | 7190 | Los Angeles | 10.4 | 77.1 | 12.5 | 50.3 | 38.8 | 1.7 | 0.2 | 7.4 | 1.7 |
| 6037460302 | 23.79 | 47.12 | 45-50% | 4442 | Los Angeles | 12.3 | 77.1 | 10.6 | 42 | 16.8 | 33.8 | 0.2 | 3.2 | 4 |
| 6075012201 | 23.78 | 47.11 | 45-50% | 4567 | San Francisco | 5.1 | 85.7 | 9.2 | 27.9 | 36.5 | 5.4 | 0.6 | 25.5 | 4.1 |
| 6037275101 | 23.78 | 47.09 | 45-50% | 1177 | Los Angeles | 9.1 | 78.3 | 12.6 | 28.1 | 41.6 | 7.3 | 0.2 | 18.2 | 4.6 |
| 6113010310 | 23.78 | 47.08 | 45-50% | 5485 | Yolo | 19.7 | 76.7 | 3.6 | 21.5 | 46.8 | 7.6 | 0.3 | 16.4 | 7.3 |
| 6073013000 | 23.78 | 47.07 | 45-50% | 5903 | San Diego | 12.2 | 74.8 | 13 | 68.2 | 19.6 | 3.8 | 0.7 | 5.7 | 1.9 |
| 6059062627 | 23.78 | 47.06 | 45-50% | 3308 | Orange | 5.2 | 72.2 | 22.6 | 8.2 | 45.3 | 1.4 | 0.1 | 40.2 | 4.8 |
| 6037461501 | 23.78 | 47.04 | 45-50% | 3700 | Los Angeles | 12.8 | 76.8 | 10.4 | 52.1 | 23.8 | 14.6 | 0.2 | 6.2 | 3.1 |
| 6037278001 | 23.77 | 47.03 | 45-50% | 2458 | Los Angeles | 11.7 | 76.8 | 11.5 | 25.5 | 49.3 | 8.5 | 0.1 | 12.4 | 4.3 |
| 6073010200 | 23.76 | 47.02 | 45-50% | 6800 | San Diego | 10.9 | 79 | 10.1 | 33.7 | 52.6 | 4.6 | 0.6 | 5 | 3.5 |
| 6037405900 | 23.76 | 47.00 | 45-50% | 4049 | Los Angeles | 12 | 77.5 | 10.5 | 57.3 | 27.5 | 4.1 | 0.2 | 9.1 | 1.8 |
| 6065042711 | 23.76 | 46.99 | 45-50% | 4543 | Riverside | 1.4 | 35.6 | 63 | 13.3 | 76 | 6.2 | 0.5 | 2.2 | 1.7 |
| 6059099603 | 23.74 | 46.98 | 45-50% | 6126 | Orange | 11.5 | 72.7 | 15.8 | 15.8 | 62.9 | 0.9 | 0.2 | 16.2 | 3.9 |
| 6097151201 | 23.74 | 46.97 | 45-50% | 6855 | Sonoma | 10.4 | 77.5 | 12.1 | 19.6 | 71.9 | 1.2 | 0.8 | 2.8 | 3.7 |
| 6065044602 | 23.74 | 46.95 | 45-50% | 2907 | Riverside | 7.2 | 67.8 | 25 | 23.8 | 66.4 | 2.8 | 0.8 | 4 | 2.2 |
| 6085503336 | 23.73 | 46.94 | 45-50% | 3492 | Santa Clara | 14.2 | 78.2 | 7.6 | 36.9 | 7.2 | 2.5 | 0.6 | 51 | 1.8 |
| 6059075401 | 23.73 | 46.93 | 45-50% | 3895 | Orange | 14.3 | 72.3 | 13.4 | 53.5 | 39 | 1.2 | 0.5 | 4.6 | 1.3 |
| 6021010300 | 23.73 | 46.92 | 45-50% | 2373 | Glenn | 11.2 | 72.6 | 16.2 | 17.6 | 70.8 | 1.3 | 6.9 | 0.8 | 2.7 |
| 6037700200 | 23.73 | 46.90 | 45-50% | 6321 | Los Angeles | 2.4 | 85.6 | 12 | 10.5 | 77.4 | 3.3 | 0.2 | 5 | 3.6 |
| 6013303102 | 23.72 | 46.89 | 45-50% | 7624 | Contra Costa | 18.2 | 75.7 | 6.1 | 34.2 | 41.1 | 7.5 | 0.3 | 11.8 | 5.2 |
| 6037113213 | 23.72 | 46.88 | 45-50% | 4316 | Los Angeles | 10.6 | 75.7 | 13.7 | 24 | 47.3 | 4.3 | 0.3 | 20.7 | 3.4 |
| 6059063603 | 23.72 | 46.87 | 45-50% | 6223 | Orange | 7.4 | 76 | 16.6 | 15 | 76.3 | 1.1 | 0.2 | 4.6 | 2.7 |
| 6073010003 | 23.72 | 46.85 | 45-50% | 5906 | San Diego | 12.2 | 71.9 | 15.9 | 64.7 | 11.5 | 3.5 | 0.2 | 17.3 | 2.7 |
| 6075022903 | 23.70 | 46.84 | 45-50% | 3384 | San Francisco | 8.3 | 82.7 | 9 | 50.6 | 30.6 | 1.8 | 0.2 | 13.7 | 3.1 |
| 6075020900 | 23.68 | 46.83 | 45-50% | 4372 | San Francisco | 6.6 | 84.3 | 9.1 | 50 | 33 | 1.5 | 0.3 | 11.9 | 3.2 |
| 6053001500 | 23.67 | 46.82 | 45-50% | 5741 | Monterey | 11.3 | 70.4 | 18.3 | 37.7 | 50.7 | 1.4 | 0.4 | 7.2 | 2.6 |
| 6053011101 | 23.66 | 46.80 | 45-50% | 5188 | Monterey | 20.1 | 72.4 | 7.5 | 86.7 | 10.4 | 0.4 | 0.2 | 0.8 | 1.4 |
| 6073014200 | 23.65 | 46.79 | 45-50% | 6277 | San Diego | 13.9 | 74.2 | 11.9 | 42.9 | 35.4 | 10.4 | 0.3 | 7.5 | 3.5 |
| 6085503506 | 23.65 | 46.78 | 45-50% | 6432 | Santa Clara | 17.2 | 75.5 | 7.3 | 67.8 | 3.5 | 2.2 | 0 | 25 | 1.5 |

| | | | | | | | | | | | | | | |
|---|---|---|---|---|---|---|---|---|---|---|---|---|---|---|
| 6053014301 | 23.64 | 46.77 | 45-50% | 3602 | Monterey | 11.8 | 76.8 | 11.4 | 22.5 | 43.1 | 6.5 | 0.3 | 21.2 | 6.4 |
| 6065049600 | 23.64 | 46.75 | 45-50% | 7176 | Riverside | 19.7 | 70.7 | 9.6 | 23.9 | 53.6 | 4.9 | 0.2 | 13.4 | 4.1 |
| 6079010016 | 23.64 | 46.74 | 45-50% | 4864 | San Luis Obispo | 13.7 | 73.7 | 12.6 | 31.5 | 63.2 | 1.5 | 1 | 0.8 | 2 |
| 6097152702 | 23.63 | 46.73 | 45-50% | 5242 | Sonoma | 13.1 | 75.8 | 11.1 | 23.5 | 66.7 | 1.5 | 1.3 | 3.9 | 3.1 |
| 6053000101 | 23.63 | 46.71 | 45-50% | 2079 | Monterey | 16.1 | 72.7 | 11.2 | 63.2 | 28 | 1 | 0.2 | 4.5 | 3.1 |
| 6019005905 | 23.63 | 46.70 | 45-50% | 6809 | Fresno | 11.7 | 72.8 | 15.5 | 21.3 | 63 | 1 | 0.6 | 11.6 | 2.4 |
| 6059088203 | 23.63 | 46.69 | 45-50% | 4819 | Orange | 14.8 | 73.6 | 11.6 | 34.9 | 24.5 | 1.6 | 0.4 | 36.9 | 1.6 |
| 6059086801 | 23.62 | 46.68 | 45-50% | 3267 | Orange | 12.2 | 75.9 | 11.9 | 38.1 | 35.8 | 1.5 | 0.1 | 21.8 | 2.6 |
| 6073002707 | 23.62 | 46.66 | 45-50% | 5369 | San Diego | 20.3 | 75.4 | 4.3 | 58.3 | 4.5 | 14.5 | 0.2 | 20.7 | 1.7 |
| 6065044606 | 23.62 | 46.65 | 45-50% | 2852 | Riverside | 7.2 | 73.3 | 19.5 | 25.1 | 67.5 | 2.9 | 0.9 | 2 | 1.6 |
| 6021010100 | 23.61 | 46.64 | 45-50% | 8192 | Glenn | 16 | 71.8 | 12.2 | 42.3 | 51.7 | 0.7 | 1 | 2.6 | 1.7 |
| 6085504507 | 23.61 | 46.63 | 45-50% | 5768 | Santa Clara | 12.4 | 75.9 | 11.7 | 20.1 | 17.4 | 2.8 | 0.3 | 55.7 | 3.7 |
| 6071010411 | 23.61 | 46.61 | 45-50% | 6752 | San Bernardino | 13.3 | 68.3 | 18.4 | 17.8 | 73.8 | 3.2 | 0.8 | 2.1 | 2.3 |
| 6095250300 | 23.61 | 46.60 | 45-50% | 3206 | Solano | 12.7 | 72.7 | 14.6 | 23.8 | 31.1 | 19.1 | 0.6 | 20.3 | 5.1 |
| 6037575001 | 23.59 | 46.59 | 45-50% | 3608 | Los Angeles | 10.9 | 83.2 | 5.9 | 23.6 | 41.5 | 11.2 | 0.5 | 18.1 | 5 |
| 6037403901 | 23.59 | 46.58 | 45-50% | 3110 | Los Angeles | 12.6 | 76.2 | 11.2 | 47.1 | 39.7 | 2.7 | 0.2 | 8.1 | 2.2 |
| 6075022801 | 23.59 | 46.56 | 45-50% | 5078 | San Francisco | 10.2 | 84 | 5.8 | 42.2 | 39.1 | 2.8 | 0.1 | 12 | 3.8 |
| 6059011716 | 23.59 | 46.55 | 45-50% | 5410 | Orange | 14.1 | 75.7 | 10.2 | 26.3 | 36.1 | 1.9 | 0.1 | 33.4 | 2.2 |
| 6083002211 | 23.58 | 46.54 | 45-50% | 5366 | Santa Barbara | 10.7 | 64.2 | 25.1 | 43.7 | 47.3 | 1 | 0.5 | 5.8 | 1.7 |
| 6059062612 | 23.58 | 46.53 | 45-50% | 8186 | Orange | 8.2 | 75.4 | 16.4 | 6.9 | 56.6 | 1.1 | 0.1 | 30.3 | 5 |
| 6059001704 | 23.57 | 46.51 | 45-50% | 7451 | Orange | 14.7 | 75.4 | 9.9 | 8.6 | 19.9 | 1 | 0 | 68.2 | 2.2 |
| 6013303203 | 23.56 | 46.50 | 45-50% | 8491 | Contra Costa | 15.5 | 70.8 | 13.7 | 21.2 | 55.6 | 8.3 | 0.4 | 10 | 4.5 |
| 6037503401 | 23.56 | 46.49 | 45-50% | 6529 | Los Angeles | 11.7 | 74.2 | 14.1 | 48.6 | 43.5 | 1 | 0.2 | 5.3 | 1.4 |
| 6067005204 | 23.55 | 46.47 | 45-50% | 4220 | Sacramento | 10.7 | 67.9 | 21.4 | 16.7 | 66 | 5.4 | 0.6 | 7.4 | 3.9 |
| 6073010300 | 23.55 | 46.46 | 45-50% | 4507 | San Diego | 13.2 | 74.2 | 12.6 | 46.9 | 38.1 | 2.9 | 0.4 | 7.1 | 4.5 |
| 6001442700 | 23.54 | 46.45 | 45-50% | 2873 | Alameda | 12.5 | 71.5 | 16 | 16.8 | 53.3 | 1.6 | 0.2 | 22.5 | 5.6 |
| 6061021003 | 23.54 | 46.44 | 45-50% | 6210 | Placer | 12.9 | 76.3 | 10.8 | 16.1 | 72.6 | 1.7 | 0.8 | 5.7 | 3.1 |
| 6111005502 | 23.54 | 46.42 | 45-50% | 5127 | Ventura | 14.5 | 78.4 | 7.1 | 34.4 | 45.7 | 3.1 | 0.4 | 12.7 | 3.6 |
| 6073009000 | 23.53 | 46.41 | 45-50% | 3861 | San Diego | 12.6 | 77.1 | 10.3 | 42.4 | 35.5 | 5 | 0.2 | 13.8 | 3.2 |
| 6073013702 | 23.53 | 46.40 | 45-50% | 5357 | San Diego | 15.6 | 76.4 | 8 | 40.1 | 35.8 | 13.6 | 0.4 | 6.2 | 4 |
| 6001420400 | 23.52 | 46.39 | 45-50% | 3124 | Alameda | 24.6 | 74.8 | 0.6 | 13.6 | 27.8 | 3.8 | 0.9 | 48.9 | 5 |
| 6097153902 | 23.51 | 46.37 | 45-50% | 4147 | Sonoma | 14.3 | 74.6 | 11.1 | 49.8 | 46.9 | 0.3 | 0.9 | 0.7 | 1.3 |
| 6073014902 | 23.51 | 46.36 | 45-50% | 3186 | San Diego | 11.5 | 75.7 | 12.8 | 22.1 | 66.3 | 3.6 | 0.4 | 3.6 | 3.9 |
| 6073012303 | 23.51 | 46.35 | 45-50% | 3431 | San Diego | 9.8 | 67.9 | 22.3 | 45.3 | 40.4 | 4.8 | 0.2 | 6.8 | 2.4 |
| 6059001301 | 23.50 | 46.34 | 45-50% | 6423 | Orange | 10.5 | 78.7 | 10.8 | 41.5 | 42.4 | 2.4 | 0.2 | 11.1 | 2.4 |
| 6001436100 | 23.50 | 46.32 | 45-50% | 5261 | Alameda | 12.5 | 74.7 | 12.8 | 40.1 | 28 | 5.3 | 0.4 | 22.4 | 3.7 |
| 6053000501 | 23.49 | 46.31 | 45-50% | 4842 | Monterey | 23.6 | 72.7 | 3.7 | 97.2 | 1.6 | 0.2 | 0.2 | 0.3 | 0.5 |
| 6037571900 | 23.49 | 46.30 | 45-50% | 5509 | Los Angeles | 11.3 | 76.8 | 11.9 | 18.7 | 48.3 | 16.4 | 0.5 | 12 | 4.1 |
| 6001440336 | 23.49 | 46.29 | 45-50% | 4459 | Alameda | 12.6 | 77.1 | 10.3 | 23.9 | 18 | 8 | 0.2 | 45 | 4.9 |
| 6029002804 | 23.48 | 46.27 | 45-50% | 2672 | Kern | 3.9 | 39.8 | 56.3 | 15.8 | 76.9 | 2.5 | 0.4 | 2.3 | 2.1 |
| 6001432700 | 23.47 | 46.26 | 45-50% | 2478 | Alameda | 11.4 | 72.5 | 16.1 | 21.2 | 47.9 | 9.8 | 0.4 | 16.5 | 4.1 |
| 6007001704 | 23.47 | 46.25 | 45-50% | 3060 | Butte | 10.5 | 71.4 | 18.1 | 7.1 | 86.8 | 0.2 | 1.2 | 0.8 | 4 |
| 6113010302 | 23.46 | 46.24 | 45-50% | 7270 | Yolo | 15.3 | 78.4 | 6.3 | 21 | 50.5 | 4.8 | 0.4 | 17.9 | 5.5 |
| 6073002708 | 23.45 | 46.22 | 45-50% | 5689 | San Diego | 18.7 | 74.6 | 6.7 | 53.6 | 8 | 14.8 | 0.1 | 21 | 2.5 |
| 6037186202 | 23.44 | 46.21 | 45-50% | 1974 | Los Angeles | 11 | 77.5 | 11.5 | 44.9 | 16 | 2 | 0.1 | 35.3 | 1.8 |
| 6029000907 | 23.44 | 46.20 | 45-50% | 2463 | Kern | 19.2 | 73 | 7.8 | 66.4 | 27.2 | 3.7 | 1.3 | 0.6 | 0.9 |
| 6037189300 | 23.42 | 46.18 | 45-50% | 3077 | Los Angeles | 10.3 | 71.5 | 18.2 | 5.9 | 76 | 2.3 | 0 | 13 | 2.7 |
| 6037214901 | 23.42 | 46.17 | 45-50% | 3083 | Los Angeles | 4.3 | 78.9 | 16.8 | 5.1 | 78.8 | 2.9 | 0.1 | 7.9 | 5.3 |
| 6097152000 | 23.41 | 46.16 | 45-50% | 2079 | Sonoma | 12.2 | 82.9 | 4.9 | 26 | 62 | 2.5 | 1.2 | 3.9 | 4.4 |
| 6075016802 | 23.40 | 46.15 | 45-50% | 3264 | San Francisco | 4.5 | 89.9 | 5.6 | 13 | 58.8 | 11.1 | 0.7 | 11.8 | 4.5 |
| 6095253205 | 23.40 | 46.13 | 45-50% | 3022 | Solano | 16.2 | 77.8 | 6 | 35.8 | 49 | 5.7 | 0.5 | 4.6 | 4.3 |
| 6085512311 | 23.40 | 46.12 | 45-50% | 3314 | Santa Clara | 16 | 72.5 | 11.5 | 37 | 46.7 | 2.1 | 0.3 | 10.3 | 3.7 |
| 6001410000 | 23.39 | 46.11 | 45-50% | 2805 | Alameda | 9.8 | 69.7 | 20.5 | 9.6 | 31 | 48.8 | 0.1 | 6.3 | 4.2 |
| 6013336202 | 23.39 | 46.10 | 45-50% | 5701 | Contra Costa | 21.9 | 75.3 | 2.8 | 77.2 | 11.2 | 3.5 | 0.1 | 6.1 | 1.9 |
| 6037503502 | 23.38 | 46.08 | 45-50% | 4130 | Los Angeles | 12.8 | 75.8 | 11.4 | 60.5 | 31.3 | 1 | 0.2 | 5.4 | 1.6 |
| 6001442900 | 23.38 | 46.07 | 45-50% | 7194 | Alameda | 14.1 | 74.9 | 11 | 19.1 | 33.5 | 3.2 | 0.3 | 38.7 | 5.1 |
| 6071010417 | 23.37 | 46.06 | 45-50% | 3251 | San Bernardino | 10.2 | 74.6 | 15.2 | 15.4 | 79 | 1 | 1 | 1.1 | 2.5 |
| 6053000102 | 23.37 | 46.05 | 45-50% | 9054 | Monterey | 16.6 | 75.2 | 8.2 | 65.8 | 12 | 2 | 0.2 | 18.3 | 1.8 |
| 6065044102 | 23.36 | 46.03 | 45-50% | 2841 | Riverside | 14.8 | 70.8 | 14.4 | 51.7 | 36.6 | 5.5 | 1.9 | 1.8 | 2.5 |
| 6037128602 | 23.36 | 46.02 | 45-50% | 3189 | Los Angeles | 10.2 | 76.5 | 13.3 | 17.6 | 70.1 | 3.6 | 0 | 5.4 | 3.3 |
| 6059099413 | 23.35 | 46.01 | 45-50% | 8230 | Orange | 11.1 | 69.2 | 19.7 | 16.3 | 62.6 | 0.8 | 0.2 | 16.8 | 3.3 |
| 6037109200 | 23.35 | 46.00 | 45-50% | 2669 | Los Angeles | 11 | 76 | 13 | 37.7 | 37.7 | 3.5 | 0.2 | 18.2 | 2.7 |
| 6075020200 | 23.34 | 45.98 | 45-50% | 6269 | San Francisco | 5.7 | 83.7 | 10.6 | 25.2 | 49.5 | 6 | 0.5 | 15.9 | 2.9 |
| 6101050401 | 23.34 | 45.97 | 45-50% | 4783 | Sutter | 15.9 | 73.9 | 10.2 | 24 | 54.4 | 1.6 | 0.9 | 15 | 4 |
| 6055201003 | 23.34 | 45.96 | 45-50% | 4389 | Napa | 18.9 | 73.9 | 7.2 | 18.2 | 22.6 | 8.8 | 0.3 | 45.8 | 4.2 |
| 6085506301 | 23.34 | 45.95 | 45-50% | 5334 | Santa Clara | 10.8 | 77.3 | 11.9 | 23.5 | 41.1 | 5.2 | 0.2 | 25.7 | 4.3 |

| | | | | | | | | | | | | | | | |
|---|---|---|---|---|---|---|---|---|---|---|---|---|---|---|---|
| 6001451506 | 23.33 | 45.93 | 45-50% | 3138 | Alameda | 17.2 | 75.1 | 7.7 | 33.8 | 51.1 | 4 | 0.4 | 6.5 | 4.1 |
| 6037461100 | 23.32 | 45.92 | 45-50% | 4844 | Los Angeles | 13.7 | 75.7 | 10.6 | 39.2 | 26.3 | 25.4 | 0.2 | 5 | 3.9 |
| 6071009707 | 23.32 | 45.91 | 45-50% | 5920 | San Bernardino | 7.6 | 50.4 | 42 | 17.9 | 69.1 | 5.3 | 0.5 | 5.1 | 2 |
| 6001440335 | 23.31 | 45.89 | 45-50% | 6496 | Alameda | 16.5 | 78.1 | 5.4 | 8.5 | 11.5 | 4.7 | 0.1 | 69.3 | 5.9 |
| 6037265304 | 23.31 | 45.88 | 45-50% | 3570 | Los Angeles | 0.4 | 98.7 | 0.9 | 14.8 | 45.2 | 2.1 | 0.2 | 32.9 | 4.7 |
| 6037403721 | 23.31 | 45.87 | 45-50% | 4998 | Los Angeles | 12.1 | 75 | 12.9 | 52.9 | 31.7 | 3 | 0.2 | 10.2 | 2 |
| 6037113237 | 23.31 | 45.86 | 45-50% | 3661 | Los Angeles | 9.2 | 73.3 | 17.5 | 16.1 | 56.8 | 5.2 | 0.2 | 17.8 | 3.9 |
| 6065045000 | 23.30 | 45.84 | 45-50% | 3424 | Riverside | 11.3 | 72.2 | 16.5 | 46.4 | 48.6 | 1.8 | 0.3 | 1.3 | 1.5 |
| 6037570902 | 23.30 | 45.83 | 45-50% | 3616 | Los Angeles | 12.9 | 76.2 | 10.9 | 26.4 | 53.8 | 6.2 | 0.5 | 9.4 | 3.7 |
| 6065046405 | 23.29 | 45.82 | 45-50% | 3974 | Riverside | 13.5 | 76.6 | 9.9 | 37.2 | 54.3 | 2.1 | 0.9 | 2.9 | 2.7 |
| 6059099905 | 23.29 | 45.81 | 45-50% | 3053 | Orange | 12.5 | 76.1 | 11.4 | 28.6 | 46.4 | 1.8 | 0.6 | 19.9 | 2.7 |
| 6037406101 | 23.29 | 45.79 | 45-50% | 3139 | Los Angeles | 11.6 | 76.3 | 12.1 | 51.2 | 36.4 | 2.5 | 0.5 | 7.1 | 2.3 |
| 6037267404 | 23.27 | 45.78 | 45-50% | 2806 | Los Angeles | 4.6 | 85.1 | 10.3 | 11 | 63.6 | 2.6 | 0 | 18.5 | 4.3 |
| 6085504422 | 23.26 | 45.77 | 45-50% | 3672 | Santa Clara | 11.7 | 75 | 13.3 | 20.7 | 11.4 | 3.5 | 0.1 | 61.5 | 2.9 |
| 6005000500 | 23.26 | 45.76 | 45-50% | 2995 | Amador | 9.8 | 68.4 | 21.8 | 9.4 | 85.5 | 0.4 | 1.3 | 0.8 | 2.6 |
| 6029000910 | 23.26 | 45.74 | 45-50% | 9904 | Kern | 15.9 | 71.6 | 12.5 | 37.2 | 48.3 | 5.5 | 0.8 | 5.6 | 2.6 |
| 6065040703 | 23.26 | 45.73 | 45-50% | 2780 | Riverside | 10.5 | 77.9 | 11.6 | 27.5 | 66.2 | 0.8 | 1 | 1.5 | 3.1 |
| 6059062626 | 23.25 | 45.72 | 45-50% | 2773 | Orange | 4.6 | 91.6 | 3.8 | 9.6 | 34.5 | 1.8 | 0 | 49.5 | 4.6 |
| 6073018100 | 23.25 | 45.71 | 45-50% | 5659 | San Diego | 10.3 | 77.4 | 12.3 | 20.7 | 70.4 | 1.8 | 0.6 | 3.2 | 3.2 |
| 6073003204 | 23.24 | 45.69 | 45-50% | 3453 | San Diego | 11.8 | 73.1 | 15.1 | 51.5 | 31 | 2.8 | 0.5 | 11.9 | 2.3 |
| 6037403408 | 23.24 | 45.68 | 45-50% | 6576 | Los Angeles | 9 | 78.2 | 12.8 | 19.7 | 7.8 | 4 | 0.1 | 66.1 | 2.2 |
| 6075031201 | 23.24 | 45.67 | 45-50% | 6167 | San Francisco | 9.2 | 77.7 | 13.1 | 15.8 | 13.7 | 8.4 | 0.2 | 59.7 | 2.1 |
| 6111005403 | 23.22 | 45.66 | 45-50% | 2694 | Ventura | 13 | 71.3 | 15.7 | 53.2 | 37.8 | 1.1 | 0.4 | 5.2 | 2.3 |
| 6073010010 | 23.22 | 45.64 | 45-50% | 5510 | San Diego | 12.9 | 70.3 | 16.8 | 72.7 | 12.4 | 1.9 | 0.1 | 11.2 | 1.7 |
| 6037408628 | 23.21 | 45.63 | 45-50% | 5103 | Los Angeles | 7.7 | 72 | 20.3 | 18.1 | 9.7 | 1.1 | 0 | 69.4 | 1.8 |
| 6037403802 | 23.21 | 45.62 | 45-50% | 5553 | Los Angeles | 12.1 | 76.6 | 11.3 | 45.3 | 36.2 | 4.1 | 0.4 | 11.6 | 2.5 |
| 6059063903 | 23.21 | 45.60 | 45-50% | 3957 | Orange | 12.5 | 74.7 | 12.8 | 36.4 | 43.1 | 1.1 | 0.1 | 16.5 | 2.8 |
| 6075026100 | 23.19 | 45.59 | 45-50% | 6810 | San Francisco | 10.2 | 75.6 | 14.2 | 26.5 | 10.9 | 1.4 | 0.1 | 58.8 | 2.2 |
| 6073008509 | 23.17 | 45.58 | 45-50% | 6647 | San Diego | 10.7 | 75.7 | 13.6 | 19.1 | 55.2 | 7.5 | 0.5 | 12.6 | 5.1 |
| 6085505001 | 23.15 | 45.57 | 45-50% | 9741 | Santa Clara | 15.1 | 78.7 | 6.2 | 15.4 | 22.4 | 2.8 | 0.1 | 55.5 | 3.8 |
| 6095250103 | 23.15 | 45.55 | 45-50% | 4292 | Solano | 11.7 | 73.4 | 14.9 | 17.3 | 26.9 | 20.1 | 0.5 | 30.2 | 5 |
| 6059042310 | 23.15 | 45.54 | 45-50% | 8391 | Orange | 12.5 | 73.2 | 14.3 | 35.6 | 59 | 0.4 | 0.5 | 2.2 | 2.3 |
| 6037462202 | 23.15 | 45.53 | 45-50% | 2928 | Los Angeles | 10.2 | 84 | 5.8 | 11.1 | 46.1 | 6.2 | 0.1 | 32.4 | 4 |
| 6059001705 | 23.15 | 45.52 | 45-50% | 4343 | Orange | 12.7 | 74.4 | 12.9 | 39.9 | 35.2 | 2.1 | 0.2 | 19.5 | 3 |
| 6037276000 | 23.15 | 45.50 | 45-50% | 5396 | Los Angeles | 10.6 | 73.3 | 16.1 | 17.5 | 63.6 | 3.5 | 0.1 | 10.7 | 4.5 |
| 6081611700 | 23.14 | 45.49 | 45-50% | 5970 | San Mateo | 16.9 | 75.6 | 7.5 | 68.6 | 3.6 | 17.9 | 0 | 8.2 | 1.7 |
| 6073018601 | 23.14 | 45.48 | 45-50% | 4779 | San Diego | 15 | 76.8 | 8.2 | 27.9 | 53 | 2.7 | 0.4 | 11.4 | 4.6 |
| 6095253404 | 23.14 | 45.47 | 45-50% | 6611 | Solano | 16.4 | 76.6 | 7 | 39.4 | 48.8 | 3.8 | 0.4 | 3.9 | 3.6 |
| 6073002903 | 23.14 | 45.45 | 45-50% | 3717 | San Diego | 14.4 | 74.9 | 10.7 | 36.5 | 40.3 | 9.1 | 0.3 | 10.4 | 3.4 |
| 6037462301 | 23.14 | 45.44 | 45-50% | 4655 | Los Angeles | 13.3 | 78.2 | 8.5 | 52 | 22.6 | 12.1 | 0.2 | 10.2 | 3 |
| 6085506501 | 23.13 | 45.43 | 45-50% | 7710 | Santa Clara | 17.9 | 75.4 | 6.7 | 52 | 24.9 | 5.8 | 0.2 | 14.7 | 2.6 |
| 6037702901 | 23.12 | 45.42 | 45-50% | 8866 | Los Angeles | 4.9 | 81.7 | 13.4 | 7.7 | 74.7 | 5.1 | 0.2 | 8.4 | 3.8 |
| 6013307204 | 23.11 | 45.40 | 45-50% | 4300 | Contra Costa | 13.4 | 73.9 | 12.7 | 40 | 40.2 | 9 | 0.6 | 6.6 | 3.6 |
| 6111004000 | 23.11 | 45.39 | 45-50% | 6586 | Ventura | 17.7 | 72.6 | 9.7 | 85.2 | 7.9 | 1.4 | 0.2 | 4.5 | 0.7 |
| 6037403702 | 23.08 | 45.38 | 45-50% | 3794 | Los Angeles | 9.6 | 74.1 | 16.3 | 40.1 | 41.9 | 3.3 | 0.2 | 11.8 | 2.7 |
| 6065043010 | 23.08 | 45.37 | 45-50% | 5687 | Riverside | 16.2 | 77.8 | 6 | 46.3 | 43.7 | 4.1 | 0.3 | 3 | 2.6 |
| 6077004701 | 23.08 | 45.35 | 45-50% | 2757 | San Joaquin | 13.6 | 72 | 14.4 | 30.4 | 64.7 | 0.3 | 0.4 | 1.3 | 2.8 |
| 6059021915 | 23.07 | 45.34 | 45-50% | 3985 | Orange | 8.2 | 70.3 | 21.5 | 14.2 | 61 | 1.2 | 0.1 | 20.1 | 3.5 |
| 6037554519 | 23.07 | 45.33 | 45-50% | 3613 | Los Angeles | 7.6 | 69.4 | 23 | 9 | 17.9 | 4.2 | 0.1 | 66.4 | 2.4 |
| 6107000100 | 23.06 | 45.31 | 45-50% | 5142 | Tulare | 9.7 | 71 | 19.3 | 23.3 | 71.9 | 0.4 | 1.1 | 1.4 | 2 |
| 6061020806 | 23.05 | 45.30 | 45-50% | 3494 | Placer | 11.5 | 70.3 | 18.2 | 19.2 | 74.5 | 1.1 | 0.7 | 1.7 | 2.8 |
| 6097152801 | 23.05 | 45.29 | 45-50% | 5547 | Sonoma | 12.3 | 79.9 | 7.8 | 21 | 66.3 | 1.6 | 1 | 5.8 | 4.3 |
| 6067007701 | 23.04 | 45.28 | 45-50% | 6126 | Sacramento | 12.2 | 74 | 13.8 | 14.7 | 68.2 | 6.6 | 0.8 | 5.8 | 4 |
| 6065042717 | 23.04 | 45.26 | 45-50% | 5079 | Riverside | 18.3 | 76 | 5.7 | 49.5 | 43.6 | 2.5 | 0.5 | 1.7 | 2.4 |
| 6075015801 | 23.04 | 45.25 | 45-50% | 3594 | San Francisco | 9.5 | 77.8 | 12.7 | 11.1 | 38 | 28.2 | 0.3 | 18.2 | 4.1 |
| 6073003108 | 23.03 | 45.24 | 45-50% | 3520 | San Diego | 15.6 | 74.5 | 9.9 | 55.1 | 23.2 | 8.1 | 0.3 | 9.4 | 3.9 |
| 6065041807 | 23.03 | 45.23 | 45-50% | 2400 | Riverside | 12.9 | 78.2 | 8.9 | 48.6 | 43.8 | 2 | 0.2 | 3.2 | 2.1 |
| 6111000400 | 23.02 | 45.21 | 45-50% | 6758 | Ventura | 15.7 | 73 | 11.3 | 76.2 | 22.3 | 0.1 | 0.3 | 0.4 | 0.7 |
| 6065043239 | 23.02 | 45.20 | 45-50% | 6792 | Riverside | 9.8 | 75.1 | 15.1 | 19.7 | 74 | 1 | 0.6 | 2.4 | 2.2 |
| 6073014500 | 23.00 | 45.19 | 45-50% | 3749 | San Diego | 14.1 | 73 | 12.9 | 31 | 43.9 | 11.8 | 0.7 | 8.9 | 3.6 |
| 6013304001 | 22.99 | 45.18 | 45-50% | 3718 | Contra Costa | 16.4 | 73.4 | 10.2 | 17.1 | 55.3 | 6.8 | 0.1 | 15.4 | 5.3 |
| 6053000300 | 22.99 | 45.16 | 45-50% | 4177 | Monterey | 16 | 73.1 | 10.9 | 66.1 | 21.3 | 1.9 | 0.2 | 7.6 | 2.9 |
| 6059088904 | 22.99 | 45.15 | 45-50% | 5766 | Orange | 11.4 | 75.6 | 13 | 9 | 10.8 | 0.3 | 0.1 | 77.9 | 1.9 |
| 6037408625 | 22.98 | 45.14 | 45-50% | 4160 | Los Angeles | 9.5 | 72.2 | 18.3 | 33.8 | 20.5 | 0.8 | 0 | 43.4 | 1.5 |
| 6059110110 | 22.97 | 45.13 | 45-50% | 5706 | Orange | 12.5 | 78.2 | 9.3 | 32.1 | 33.9 | 4 | 0.2 | 26.6 | 3.2 |
| 6073020309 | 22.97 | 45.11 | 45-50% | 3945 | San Diego | 16.3 | 76.2 | 7.5 | 42.6 | 40.1 | 1.4 | 0.8 | 11.6 | 3.5 |

| | | | | | | | | | | | | | | |
|---|---|---|---|---|---|---|---|---|---|---|---|---|---|---|
| 6095253108 | 22.96 | 45.10 | 45-50% | 4088 | Solano | 13.4 | 77.3 | 9.3 | 25 | 53.3 | 7.8 | 0.8 | 7.5 | 5.6 |
| 6037462700 | 22.96 | 45.09 | 45-50% | 5471 | Los Angeles | 10.5 | 79.1 | 10.4 | 35.7 | 35.9 | 6.4 | 0.4 | 18.4 | 3.2 |
| 6111005004 | 22.96 | 45.08 | 45-50% | 5419 | Ventura | 19 | 78 | 3 | 58.6 | 25 | 3 | 0.2 | 10.3 | 3 |
| 6097153006 | 22.95 | 45.06 | 45-50% | 7286 | Sonoma | 12.8 | 72.8 | 14.4 | 29 | 60.7 | 1.6 | 0.7 | 4.8 | 3.2 |
| 6111007612 | 22.95 | 45.05 | 45-50% | 4762 | Ventura | 14.1 | 77.6 | 8.3 | 39.1 | 50.6 | 1.9 | 0.1 | 5.4 | 2.9 |
| 6037300800 | 22.93 | 45.04 | 45-50% | 6947 | Los Angeles | 10.2 | 73.5 | 16.3 | 12.3 | 67.3 | 1.1 | 0.1 | 15.8 | 3.4 |
| 6065043271 | 22.92 | 45.02 | 45-50% | 3930 | Riverside | 14.6 | 76.5 | 8.9 | 41.5 | 51.4 | 1.9 | 0.6 | 2 | 2.6 |
| 6007002200 | 22.92 | 45.01 | 45-50% | 5156 | Butte | 8.7 | 68.4 | 22.9 | 7.3 | 87.9 | 0.4 | 0.6 | 1.3 | 2.6 |
| 6053000701 | 22.91 | 45.00 | 40-45% | 6439 | Monterey | 24.2 | 72.3 | 3.5 | 95.3 | 2.5 | 0.6 | 0.3 | 0.7 | 0.7 |
| 6037216800 | 22.91 | 44.99 | 40-45% | 3289 | Los Angeles | 11 | 78.2 | 10.8 | 18.2 | 63.6 | 8.8 | 0.1 | 6 | 3.4 |
| 6085512043 | 22.91 | 44.97 | 40-45% | 6129 | Santa Clara | 19.1 | 74.8 | 6.1 | 63.4 | 10.5 | 5.3 | 0.1 | 19.1 | 1.6 |
| 6071011101 | 22.91 | 44.96 | 40-45% | 3771 | San Bernardino | 11.5 | 76.5 | 12 | 14.1 | 78.8 | 1 | 0.4 | 1.8 | 4 |
| 6065043314 | 22.91 | 44.95 | 40-45% | 3631 | Riverside | 15.1 | 73.8 | 11.1 | 33.4 | 59.2 | 2.4 | 1.3 | 1.4 | 2.3 |
| 6037141101 | 22.90 | 44.94 | 40-45% | 4066 | Los Angeles | 8.3 | 81.7 | 10 | 12.1 | 71.1 | 4.8 | 0.3 | 7.6 | 4.2 |
| 6009000210 | 22.90 | 44.92 | 40-45% | 9515 | Calaveras | 10.2 | 72.7 | 17.1 | 13.3 | 79.5 | 1.1 | 0.9 | 1.8 | 3.5 |
| 6073008507 | 22.90 | 44.91 | 40-45% | 7627 | San Diego | 10.8 | 76 | 13.2 | 26.9 | 50 | 3.9 | 0.2 | 15 | 4 |
| 6073020017 | 22.89 | 44.90 | 40-45% | 3282 | San Diego | 15.4 | 74.7 | 9.9 | 47.7 | 38.6 | 3 | 0.7 | 6.7 | 3.1 |
| 6059001504 | 22.89 | 44.89 | 40-45% | 4605 | Orange | 12.7 | 77.3 | 10 | 39.8 | 41.4 | 1.7 | 0.2 | 14.3 | 2.6 |
| 6001443001 | 22.88 | 44.87 | 40-45% | 2917 | Alameda | 14 | 77.7 | 8.3 | 35.1 | 28.3 | 3 | 0.2 | 30.7 | 2.6 |
| 6071010018 | 22.88 | 44.86 | 40-45% | 7068 | San Bernardino | 17.2 | 74.7 | 8.1 | 49.4 | 36.4 | 6.8 | 0.6 | 4.7 | 2 |
| 6037501700 | 22.88 | 44.85 | 40-45% | 3695 | Los Angeles | 12.9 | 73.6 | 13.5 | 57.5 | 37 | 0.6 | 0.3 | 3.2 | 1.3 |
| 6029000906 | 22.88 | 44.84 | 40-45% | 4355 | Kern | 19.3 | 72.6 | 8.1 | 69.2 | 23.1 | 4 | 1.2 | 1.2 | 1.2 |
| 6037650401 | 22.86 | 44.82 | 40-45% | 4472 | Los Angeles | 12.3 | 74.2 | 13.5 | 14.6 | 46.3 | 1 | 0.3 | 32.7 | 5 |
| 6085503507 | 22.86 | 44.81 | 40-45% | 2182 | Santa Clara | 17.5 | 75.2 | 7.3 | 78 | 1.6 | 2.8 | 0.3 | 16.1 | 1.1 |
| 6001435900 | 22.85 | 44.80 | 40-45% | 5073 | Alameda | 10.7 | 73.9 | 15.4 | 28.4 | 36.7 | 4.4 | 0.2 | 27.3 | 3.1 |
| 6071008710 | 22.85 | 44.78 | 40-45% | 4442 | San Bernardino | 15 | 67.1 | 17.9 | 39 | 55.5 | 1 | 0.7 | 1.7 | 2.2 |
| 6083002102 | 22.85 | 44.77 | 40-45% | 2084 | Santa Barbara | 14.3 | 72.5 | 13.2 | 52.2 | 40.9 | 0.8 | 0.5 | 2.9 | 2.6 |
| 6001444100 | 22.84 | 44.76 | 40-45% | 7280 | Alameda | 11.1 | 70.5 | 18.4 | 28.8 | 39.9 | 3.2 | 0.1 | 22.9 | 5.1 |
| 6087110600 | 22.84 | 44.75 | 40-45% | 8349 | Santa Cruz | 17.4 | 73 | 9.6 | 83.3 | 11.2 | 0.5 | 0.2 | 3.7 | 1.1 |
| 6065043304 | 22.83 | 44.73 | 40-45% | 6816 | Riverside | 9 | 69.5 | 21.5 | 19.6 | 72.8 | 1.4 | 0.7 | 3.7 | 1.8 |
| 6037192300 | 22.82 | 44.72 | 40-45% | 2799 | Los Angeles | 7.1 | 77.7 | 15.2 | 7.9 | 66.9 | 4.1 | 0 | 17.4 | 3.7 |
| 6037113322 | 22.81 | 44.71 | 40-45% | 3947 | Los Angeles | 9.2 | 71.6 | 19.2 | 19.3 | 54.8 | 3.7 | 0.1 | 18.8 | 3.3 |
| 6055200501 | 22.80 | 44.70 | 40-45% | 5013 | Napa | 16.2 | 75.6 | 8.2 | 54.2 | 41.7 | 0.2 | 0.6 | 1.4 | 1.9 |
| 6081606100 | 22.79 | 44.68 | 40-45% | 4246 | San Mateo | 15.2 | 75.5 | 9.3 | 41.3 | 29.8 | 2.5 | 0.1 | 21.8 | 4.5 |
| 6073000900 | 22.79 | 44.67 | 40-45% | 5178 | San Diego | 6.6 | 81.3 | 12.1 | 29.6 | 51.8 | 7.7 | 0.4 | 6.8 | 3.7 |
| 6037900201 | 22.77 | 44.66 | 40-45% | 1261 | Los Angeles | 13.1 | 72.2 | 14.7 | 39.7 | 52.7 | 2.8 | 0.7 | 1.3 | 2.8 |
| 6073013310 | 22.77 | 44.65 | 40-45% | 28960 | San Diego | 16.8 | 76.9 | 6.3 | 44.4 | 16.9 | 5.7 | 0.2 | 28.9 | 3.9 |
| 6085509304 | 22.76 | 44.63 | 40-45% | 2871 | Santa Clara | 11.9 | 81.3 | 6.8 | 28.7 | 40.3 | 2.9 | 0 | 24.5 | 3.6 |
| 6019005513 | 22.75 | 44.62 | 40-45% | 2952 | Fresno | 13.3 | 76.6 | 10.1 | 15.8 | 68.7 | 2.3 | 0.8 | 10 | 2.4 |
| 6059052502 | 22.75 | 44.61 | 40-45% | 5913 | Orange | 11.5 | 73.4 | 15.1 | 24.1 | 51.6 | 1.4 | 0 | 20.1 | 2.7 |
| 6073016201 | 22.74 | 44.60 | 40-45% | 5843 | San Diego | 10.9 | 70.6 | 18.5 | 12.9 | 78 | 1.7 | 0.2 | 4.1 | 3.2 |
| 6095252903 | 22.74 | 44.58 | 40-45% | 4368 | Solano | 9 | 74.6 | 16.4 | 17.6 | 73.9 | 1.6 | 0.3 | 2.9 | 3.7 |
| 6037311300 | 22.74 | 44.57 | 40-45% | 3811 | Los Angeles | 12.1 | 74.5 | 13.4 | 25 | 60 | 1.8 | 0.5 | 10.3 | 2.5 |
| 6037702700 | 22.74 | 44.56 | 40-45% | 3440 | Los Angeles | 12.8 | 72.6 | 14.6 | 20.9 | 57.8 | 2.3 | 0.1 | 14.5 | 4.4 |
| 6065043009 | 22.74 | 44.55 | 40-45% | 4736 | Riverside | 15.5 | 78.4 | 6.1 | 43.3 | 44.9 | 3.8 | 0.6 | 4.2 | 3 |
| 6101050301 | 22.73 | 44.53 | 40-45% | 2403 | Sutter | 12.3 | 71.4 | 16.3 | 23.3 | 63.4 | 1.1 | 0.8 | 7.4 | 3.9 |
| 6075012100 | 22.73 | 44.52 | 40-45% | 3833 | San Francisco | 1.9 | 90.6 | 7.5 | 13 | 50.1 | 4.6 | 0.9 | 26.4 | 5 |
| 6081610100 | 22.71 | 44.51 | 40-45% | 2484 | San Mateo | 14.5 | 79.7 | 5.8 | 47.8 | 39.8 | 1.8 | 0.2 | 7.9 | 2.6 |
| 6037403404 | 22.69 | 44.49 | 40-45% | 2521 | Los Angeles | 7.1 | 78.7 | 14.2 | 13.8 | 16.1 | 3 | 0 | 64.4 | 2.7 |
| 6073013908 | 22.68 | 44.48 | 40-45% | 3708 | San Diego | 16.1 | 74.4 | 9.5 | 56.8 | 20.9 | 11.1 | 0.3 | 7.7 | 3.1 |
| 6039000509 | 22.67 | 44.47 | 40-45% | 5935 | Madera | 11.6 | 76.9 | 11.5 | 26.3 | 67.6 | 1 | 0.9 | 2.4 | 1.8 |
| 6037101110 | 22.67 | 44.46 | 40-45% | 4731 | Los Angeles | 9.7 | 80.2 | 10.1 | 28 | 56.1 | 1.6 | 0.3 | 10.4 | 3.7 |
| 6059088002 | 22.67 | 44.44 | 40-45% | 3936 | Orange | 12.9 | 74.6 | 12.5 | 28.5 | 31.7 | 0.9 | 0.1 | 36.6 | 2.3 |
| 6037273902 | 22.67 | 44.43 | 40-45% | 4227 | Los Angeles | 7.5 | 81 | 11.5 | 9.1 | 79.9 | 3 | 0.1 | 4.6 | 3.4 |
| 6071010024 | 22.65 | 44.42 | 40-45% | 5359 | San Bernardino | 13.4 | 74.8 | 11.8 | 32.7 | 61.8 | 2.3 | 0.3 | 1.3 | 1.5 |
| 6111008202 | 22.63 | 44.41 | 40-45% | 4353 | Ventura | 12.9 | 77.5 | 9.6 | 27.8 | 59.4 | 1.5 | 0.3 | 8.2 | 2.8 |
| 6059075507 | 22.63 | 44.39 | 40-45% | 5187 | Orange | 13.3 | 79.5 | 7.2 | 49.8 | 29.2 | 2.9 | 0.3 | 15.1 | 2.7 |
| 6037571502 | 22.63 | 44.38 | 40-45% | 4661 | Los Angeles | 12.4 | 76.1 | 11.5 | 32.7 | 23.1 | 17.9 | 0.3 | 21.6 | 4.5 |
| 6037481713 | 22.63 | 44.37 | 40-45% | 2507 | Los Angeles | 7.1 | 77.7 | 15.2 | 14.6 | 2.7 | 0.3 | 0 | 81.9 | 0.5 |
| 6081600900 | 22.62 | 44.36 | 40-45% | 3933 | San Mateo | 11.1 | 71.3 | 17.6 | 8.7 | 38.3 | 1 | 0.1 | 48.3 | 3.6 |
| 6083002209 | 22.58 | 44.34 | 40-45% | 3321 | Santa Barbara | 17.7 | 74.8 | 7.5 | 73.7 | 20 | 0.8 | 0.4 | 3.6 | 1.5 |
| 6073019501 | 22.57 | 44.33 | 40-45% | 4147 | San Diego | 22.8 | 74.3 | 2.9 | 86.4 | 8.1 | 1.3 | 0.5 | 2.2 | 1.4 |
| 6037201302 | 22.57 | 44.32 | 40-45% | 3732 | Los Angeles | 8.9 | 75.1 | 16 | 24.9 | 26 | 7 | 0.2 | 39.1 | 2.8 |
| 6037700801 | 22.57 | 44.31 | 40-45% | 5220 | Los Angeles | 7.2 | 68.5 | 24.3 | 4.7 | 79.6 | 2.3 | 0 | 8.2 | 5.3 |
| 6071008706 | 22.56 | 44.29 | 40-45% | 12298 | San Bernardino | 15.3 | 72.6 | 12.1 | 22.8 | 65.9 | 2.2 | 0.3 | 6 | 2.8 |
| 6067005404 | 22.55 | 44.28 | 40-45% | 5611 | Sacramento | 9 | 67.2 | 23.8 | 10.3 | 75.1 | 2.8 | 0.3 | 8.4 | 3.1 |

| | | | | | | | | | | | | | | | |
|---|---|---|---|---|---|---|---|---|---|---|---|---|---|---|---|
| 6085509108 | 22.54 | 44.27 | 40-45% | 4281 | Santa Clara | 12.2 | 81.1 | 6.7 | 26.5 | 37.4 | 4.2 | 0.2 | 27.5 | 4.2 |
| 6073010001 | 22.53 | 44.26 | 40-45% | 4097 | San Diego | 12.5 | 73.6 | 13.9 | 62.8 | 12.2 | 3.4 | 0 | 18.4 | 3.2 |
| 6073002803 | 22.53 | 44.24 | 40-45% | 5370 | San Diego | 9.4 | 75 | 15.6 | 24.1 | 45.5 | 10.6 | 0.3 | 16.1 | 3.4 |
| 6067008128 | 22.51 | 44.23 | 40-45% | 2462 | Sacramento | 13.7 | 71.4 | 14.9 | 18.3 | 72.5 | 2.4 | 0.6 | 3.7 | 2.5 |
| 6019005605 | 22.50 | 44.22 | 40-45% | 1470 | Fresno | 10.8 | 73.8 | 15.4 | 22.9 | 63.5 | 2.2 | 0.6 | 8.3 | 2.4 |
| 6083002703 | 22.49 | 44.20 | 40-45% | 4165 | Santa Barbara | 15.2 | 71.9 | 12.9 | 51.5 | 38.8 | 3.8 | 1.1 | 2.5 | 2.3 |
| 6071025000 | 22.49 | 44.19 | 40-45% | 8850 | San Bernardino | 24.9 | 74.9 | 0.2 | 25.6 | 51.6 | 11.4 | 0.8 | 5.5 | 5.1 |
| 6073009306 | 22.49 | 44.18 | 40-45% | 5589 | San Diego | 11.9 | 78.2 | 9.9 | 16.4 | 56.5 | 7 | 0.6 | 13.8 | 5.6 |
| 6001451401 | 22.49 | 44.17 | 40-45% | 5850 | Alameda | 11.6 | 77.5 | 10.9 | 22.2 | 62 | 2.5 | 0.2 | 9.9 | 3.3 |
| 6083001102 | 22.48 | 44.15 | 40-45% | 4740 | Santa Barbara | 16.7 | 78.9 | 4.4 | 75.1 | 20.3 | 1.2 | 0.3 | 1.9 | 1.2 |
| 6037267901 | 22.48 | 44.14 | 40-45% | 2428 | Los Angeles | 3.6 | 45.8 | 50.6 | 3.6 | 82.8 | 0.9 | 0.1 | 10.4 | 2.1 |
| 6071002023 | 22.47 | 44.13 | 40-45% | 5118 | San Bernardino | 11.9 | 71 | 17.1 | 34.8 | 46.4 | 9.1 | 0.3 | 6.1 | 3.3 |
| 6037900505 | 22.47 | 44.12 | 40-45% | 4002 | Los Angeles | 17.5 | 75 | 7.5 | 36.7 | 34.4 | 22.6 | 0.2 | 2.9 | 3.2 |
| 6037103102 | 22.47 | 44.10 | 40-45% | 4751 | Los Angeles | 10.2 | 77.5 | 12.3 | 28.4 | 55.7 | 0.6 | 0.3 | 12.4 | 2.6 |
| 6069000600 | 22.47 | 44.09 | 40-45% | 8317 | San Benito | 15.6 | 76.1 | 8.3 | 48.9 | 43 | 0.8 | 0.5 | 4.4 | 2.4 |
| 6037276500 | 22.46 | 44.08 | 40-45% | 5063 | Los Angeles | 3.8 | 91 | 5.2 | 18.4 | 60.5 | 4.7 | 0.1 | 10.2 | 6.1 |
| 6037123902 | 22.46 | 44.07 | 40-45% | 2561 | Los Angeles | 9.8 | 80.2 | 10 | 29.6 | 51.3 | 4.8 | 0.3 | 10.8 | 3.2 |
| 6059075815 | 22.45 | 44.05 | 40-45% | 5176 | Orange | 13.6 | 75.5 | 10.9 | 41.5 | 49.4 | 0.9 | 0.3 | 6.2 | 1.8 |
| 6045010700 | 22.45 | 44.04 | 40-45% | 6203 | Mendocino | 13.7 | 71.8 | 14.5 | 20.2 | 70.6 | 0.6 | 4.3 | 1.3 | 3 |
| 6037214502 | 22.44 | 44.03 | 40-45% | 5528 | Los Angeles | 11 | 82.4 | 6.6 | 6.5 | 43.2 | 6 | 0.1 | 41.1 | 3.1 |
| 6037503701 | 22.44 | 44.02 | 40-45% | 4717 | Los Angeles | 13 | 74.4 | 12.6 | 51.7 | 39.5 | 1.7 | 0.3 | 4.9 | 1.9 |
| 6071010004 | 22.43 | 44.00 | 40-45% | 8437 | San Bernardino | 11.2 | 70.4 | 18.4 | 18.2 | 68.8 | 4.7 | 0.4 | 4.6 | 3.3 |
| 6109005201 | 22.43 | 43.99 | 40-45% | 1778 | Tuolumne | 8.9 | 71.8 | 19.3 | 13.3 | 78.5 | 2.5 | 1.7 | 0.8 | 3.3 |
| 6075022901 | 22.42 | 43.98 | 40-45% | 4640 | San Francisco | 10.7 | 82.6 | 6.7 | 60.1 | 24.5 | 4.5 | 0.1 | 8 | 2.8 |
| 6037214501 | 22.41 | 43.97 | 40-45% | 2932 | Los Angeles | 10.6 | 80 | 9.4 | 7.9 | 56 | 4.9 | 0.1 | 27.7 | 3.3 |
| 6059099230 | 22.40 | 43.95 | 40-45% | 4358 | Orange | 10.8 | 74.7 | 14.5 | 10.9 | 67.6 | 0.7 | 0.1 | 16.5 | 4.2 |
| 6073010106 | 22.40 | 43.94 | 40-45% | 5200 | San Diego | 13.1 | 76.4 | 10.5 | 86.9 | 6.7 | 1.5 | 0.1 | 3.9 | 1 |
| 6097150601 | 22.40 | 43.93 | 40-45% | 4089 | Sonoma | 14.5 | 74.3 | 11.2 | 32.9 | 57.2 | 2.3 | 0.3 | 5.1 | 2.2 |
| 6007002602 | 22.39 | 43.91 | 40-45% | 3455 | Butte | 7.2 | 59.7 | 33.1 | 7.5 | 85 | 0.7 | 1.5 | 2.3 | 3 |
| 6037135113 | 22.39 | 43.90 | 40-45% | 2795 | Los Angeles | 11.9 | 77.8 | 10.3 | 13.6 | 52.5 | 9.4 | 0.4 | 19.1 | 5 |
| 6065042214 | 22.39 | 43.89 | 40-45% | 6316 | Riverside | 11.5 | 80.4 | 8.1 | 39.5 | 36.9 | 11.6 | 0.3 | 8.3 | 3.3 |
| 6001431200 | 22.39 | 43.88 | 40-45% | 5627 | Alameda | 10.6 | 72.9 | 16.5 | 23.4 | 49.4 | 10.9 | 0.3 | 12.2 | 3.8 |
| 6073008600 | 22.39 | 43.86 | 40-45% | 6864 | San Diego | 15.2 | 75.5 | 9.3 | 51.4 | 19.7 | 4.9 | 0.3 | 20.7 | 3.1 |
| 6073015404 | 22.39 | 43.85 | 40-45% | 7626 | San Diego | 13.8 | 72.2 | 14 | 18.8 | 68.8 | 3.8 | 0.4 | 2.1 | 6.1 |
| 6073013401 | 22.39 | 43.84 | 40-45% | 4203 | San Diego | 10.2 | 73 | 16.8 | 52.1 | 39 | 0.8 | 0.3 | 5.3 | 2.5 |
| 6107002700 | 22.38 | 43.83 | 40-45% | 5615 | Tulare | 10.9 | 69.1 | 20 | 17.1 | 64.5 | 0.6 | 14 | 1.7 | 2.2 |
| 6001422900 | 22.38 | 43.81 | 40-45% | 4336 | Alameda | 2.8 | 93.3 | 3.9 | 11.2 | 37.1 | 8.6 | 0.2 | 37.1 | 5.8 |
| 6073018906 | 22.37 | 43.80 | 40-45% | 6033 | San Diego | 16.1 | 73 | 10.9 | 50.1 | 42.8 | 2.5 | 0.3 | 2.3 | 2 |
| 6053010605 | 22.36 | 43.79 | 40-45% | 4219 | Monterey | 20.2 | 77 | 2.8 | 90.2 | 2.8 | 1 | 0.3 | 4.5 | 1.2 |
| 6065042003 | 22.35 | 43.78 | 40-45% | 5525 | Riverside | 12.1 | 77.1 | 10.8 | 27.7 | 54 | 5.9 | 0.2 | 8.7 | 3.5 |
| 6019005509 | 22.34 | 43.76 | 40-45% | 4678 | Fresno | 14.3 | 73.2 | 12.5 | 22.5 | 55.9 | 3 | 0.4 | 15.5 | 2.7 |
| 6007003502 | 22.34 | 43.75 | 40-45% | 4758 | Butte | 15.9 | 70.1 | 14 | 50.9 | 42.7 | 0.3 | 0.9 | 3.2 | 2 |
| 6085502101 | 22.30 | 43.74 | 40-45% | 4798 | Santa Clara | 11.5 | 74.5 | 14 | 23.7 | 52 | 3.5 | 0.2 | 16.9 | 3.7 |
| 6073018904 | 22.30 | 43.73 | 40-45% | 5640 | San Diego | 16.7 | 71.2 | 12.1 | 53.3 | 42 | 0.9 | 0.5 | 1.6 | 1.7 |
| 6037702300 | 22.30 | 43.71 | 40-45% | 6364 | Los Angeles | 8.8 | 76 | 15.2 | 15.2 | 66.6 | 2.7 | 0.3 | 11.2 | 3.9 |
| 6037480400 | 22.30 | 43.70 | 40-45% | 5654 | Los Angeles | 9.2 | 74.1 | 16.7 | 29.7 | 23.9 | 1.9 | 0.1 | 42 | 2.5 |
| 6013313203 | 22.29 | 43.69 | 40-45% | 3222 | Contra Costa | 13.4 | 79.1 | 7.5 | 39.7 | 28.1 | 8.8 | 0.4 | 18.4 | 4.7 |
| 6065043227 | 22.29 | 43.68 | 40-45% | 7051 | Riverside | 15.7 | 78.5 | 5.8 | 27.6 | 50.8 | 6.7 | 0.4 | 10.8 | 3.8 |
| 6073018400 | 22.29 | 43.66 | 40-45% | 3566 | San Diego | 11 | 75.7 | 13.3 | 37.5 | 48.7 | 4.1 | 0.6 | 6.2 | 2.9 |
| 6113010901 | 22.28 | 43.65 | 40-45% | 5311 | Yolo | 15.5 | 72.9 | 11.6 | 56.7 | 36.7 | 0.9 | 1 | 2.9 | 1.8 |
| 6019005911 | 22.28 | 43.64 | 40-45% | 3386 | Fresno | 18.7 | 72.7 | 8.6 | 24.1 | 53 | 1.5 | 0.4 | 18.2 | 3 |
| 6001440334 | 22.28 | 43.62 | 40-45% | 4016 | Alameda | 10.6 | 74.7 | 14.7 | 16.4 | 13.4 | 7.4 | 0.2 | 56.8 | 5.9 |
| 6059032027 | 22.27 | 43.61 | 40-45% | 6328 | Orange | 15.5 | 80.4 | 4.1 | 39 | 43.4 | 1 | 0.4 | 13.2 | 3 |
| 6111008401 | 22.27 | 43.60 | 40-45% | 5308 | Ventura | 11.5 | 74.8 | 13.7 | 23.1 | 66.3 | 1 | 0.2 | 7 | 2.4 |
| 6077004800 | 22.26 | 43.59 | 40-45% | 5423 | San Joaquin | 13.9 | 73.9 | 12.2 | 33.1 | 62.2 | 0.6 | 0.5 | 1.6 | 2 |
| 6085512026 | 22.25 | 43.57 | 40-45% | 3871 | Santa Clara | 15 | 76.3 | 8.7 | 34.1 | 29.4 | 5.7 | 0.3 | 25.4 | 5.1 |
| 6097153103 | 22.24 | 43.56 | 40-45% | 4716 | Sonoma | 18 | 76.4 | 5.6 | 59.2 | 29.9 | 1.9 | 1.3 | 5.2 | 2.5 |
| 6079010603 | 22.23 | 43.55 | 40-45% | 1287 | San Luis Obispo | 7.7 | 61.5 | 30.8 | 13.2 | 79.6 | 0.3 | 1.4 | 4 | 1.6 |
| 6089010400 | 22.23 | 43.54 | 40-45% | 4417 | Shasta | 11.7 | 74.4 | 13.9 | 9.2 | 81.8 | 1.5 | 2.2 | 1.3 | 4 |
| 6085501300 | 22.23 | 43.52 | 40-45% | 4153 | Santa Clara | 8.3 | 86.9 | 4.8 | 26.5 | 49 | 4.8 | 0.4 | 15.3 | 3.9 |
| 6029005508 | 22.23 | 43.51 | 40-45% | 4198 | Kern | 16.4 | 73.1 | 10.5 | 25.9 | 48.6 | 17.9 | 0.6 | 2.1 | 5 |
| 6095252610 | 22.23 | 43.50 | 40-45% | 3142 | Solano | 13.3 | 72.2 | 14.5 | 25.9 | 34.5 | 20.3 | 0.5 | 12 | 6.7 |
| 6071000117 | 22.22 | 43.49 | 40-45% | 6959 | San Bernardino | 10.7 | 81.2 | 8.1 | 20.1 | 33.3 | 4.1 | 0.2 | 39.7 | 2.6 |
| 6059110111 | 22.22 | 43.47 | 40-45% | 5736 | Orange | 11.9 | 75.6 | 12.5 | 19.4 | 41.8 | 4.2 | 0.3 | 30.9 | 3.4 |
| 6111000800 | 22.22 | 43.46 | 40-45% | 7788 | Ventura | 14.4 | 73.1 | 12.5 | 64.8 | 32.4 | 0.6 | 0.4 | 0.8 | 1 |
| 6049000100 | 22.22 | 43.45 | 40-45% | 3518 | Modoc | 13 | 70.2 | 16.8 | 12 | 81.2 | 0.5 | 2.2 | 1.6 | 2.5 |

| | | | | | | | | | | | | | | |
|---|---|---|---|---|---|---|---|---|---|---|---|---|---|---|
| 6075012000 | 22.21 | 43.44 | 40-45% | 3833 | San Francisco | 2.8 | 85.5 | 11.7 | 15.1 | 46.5 | 4.3 | 0.3 | 28.8 | 5 |
| 6037275400 | 22.21 | 43.42 | 40-45% | 3349 | Los Angeles | 8.8 | 83.1 | 8.1 | 20.1 | 58 | 3.4 | 0.2 | 13.9 | 4.5 |
| 6111005202 | 22.20 | 43.41 | 40-45% | 2694 | Ventura | 10.4 | 72 | 17.6 | 22.8 | 69.3 | 1.1 | 0.3 | 4.4 | 2.1 |
| 6053011203 | 22.20 | 43.40 | 40-45% | 7173 | Monterey | 21.8 | 73.3 | 4.9 | 93.4 | 4.6 | 0.5 | 0.3 | 0.6 | 0.6 |
| 6019004213 | 22.19 | 43.39 | 40-45% | 3248 | Fresno | 13.5 | 77.2 | 9.3 | 35.3 | 49.8 | 7.2 | 0.5 | 4 | 3.2 |
| 6093000702 | 22.18 | 43.37 | 40-45% | 4406 | Siskiyou | 14.4 | 65.6 | 20 | 11.1 | 75.1 | 0.5 | 7.2 | 1 | 5.1 |
| 6075010600 | 22.17 | 43.36 | 40-45% | 3894 | San Francisco | 4.9 | 77.1 | 18 | 6.5 | 34.2 | 1.4 | 0.1 | 55.3 | 2.5 |
| 6001442302 | 22.17 | 43.35 | 40-45% | 4788 | Alameda | 15.6 | 74.1 | 10.3 | 21.2 | 24.1 | 8 | 0.4 | 40.4 | 5.9 |
| 6059110201 | 22.16 | 43.33 | 40-45% | 7483 | Orange | 11.3 | 72 | 16.7 | 29.4 | 33.5 | 4.5 | 0.4 | 29 | 3.2 |
| 6037301100 | 22.16 | 43.32 | 40-45% | 6491 | Los Angeles | 10.4 | 71.3 | 18.3 | 12.5 | 71.1 | 0.8 | 0.1 | 11.9 | 3.7 |
| 6073015704 | 22.16 | 43.31 | 40-45% | 4024 | San Diego | 15.4 | 76.5 | 8.1 | 31.8 | 53.9 | 6.4 | 0.4 | 3.4 | 4.2 |
| 6059001707 | 22.15 | 43.30 | 40-45% | 7482 | Orange | 10.6 | 77.5 | 11.9 | 10.9 | 20.8 | 1.8 | 0.1 | 64.2 | 2.2 |
| 6083001101 | 22.14 | 43.28 | 40-45% | 4738 | Santa Barbara | 14.8 | 78.1 | 7.1 | 59.7 | 35.1 | 0.9 | 0.5 | 1.9 | 1.9 |
| 6065043802 | 22.14 | 43.27 | 40-45% | 5116 | Riverside | 11.3 | 71.5 | 17.2 | 26.3 | 69.1 | 0.7 | 0.9 | 1.2 | 1.9 |
| 6037554515 | 22.13 | 43.26 | 40-45% | 3703 | Los Angeles | 10.3 | 69.6 | 20.1 | 16 | 17.3 | 6 | 0 | 57.4 | 3.3 |
| 6019005510 | 22.13 | 43.25 | 40-45% | 4997 | Fresno | 9.5 | 67.4 | 23.1 | 17.5 | 67.2 | 3.7 | 0.4 | 8.2 | 2.9 |
| 6071009119 | 22.13 | 43.23 | 40-45% | 5729 | San Bernardino | 12.6 | 77.9 | 9.5 | 30.5 | 61.3 | 2.7 | 0.5 | 2.3 | 2.7 |
| 6067008111 | 22.13 | 43.22 | 40-45% | 6153 | Sacramento | 11.2 | 74.6 | 14.2 | 12.7 | 78.6 | 1.9 | 0.7 | 2.8 | 3.3 |
| 6065042008 | 22.12 | 43.21 | 40-45% | 7082 | Riverside | 12.3 | 77.8 | 9.9 | 33.5 | 54 | 5.1 | 0.3 | 5 | 2.2 |
| 6111002700 | 22.12 | 43.20 | 40-45% | 3881 | Ventura | 10.6 | 70 | 19.4 | 24.4 | 68.5 | 1.1 | 0.4 | 2.3 | 3.3 |
| 6081610700 | 22.11 | 43.18 | 40-45% | 5207 | San Mateo | 13 | 73.7 | 13.3 | 43.4 | 40.4 | 5 | 0.3 | 7.4 | 3.6 |
| 6067008912 | 22.10 | 43.17 | 40-45% | 3100 | Sacramento | 12.1 | 75.9 | 12 | 13.7 | 66.7 | 6.2 | 0.7 | 7.3 | 5.4 |
| 6037570003 | 22.10 | 43.16 | 40-45% | 4447 | Los Angeles | 12.8 | 76.5 | 10.7 | 32.3 | 41.1 | 8.5 | 0.3 | 14.5 | 3.4 |
| 6085503327 | 22.09 | 43.15 | 40-45% | 4712 | Santa Clara | 12.6 | 73.7 | 13.7 | 33.2 | 19.9 | 2.8 | 0.1 | 41.3 | 2.8 |
| 6037273300 | 22.08 | 43.13 | 40-45% | 3695 | Los Angeles | 9.5 | 85.1 | 5.4 | 32.8 | 49.5 | 10.3 | 0.2 | 3.3 | 3.8 |
| 6037139200 | 22.07 | 43.12 | 40-45% | 5175 | Los Angeles | 11.9 | 75.2 | 12.9 | 17.6 | 65.6 | 4.6 | 0.1 | 7.5 | 4.7 |
| 6037900900 | 22.07 | 43.11 | 40-45% | 3813 | Los Angeles | 11.8 | 73.6 | 14.6 | 25 | 60.9 | 7.5 | 0.7 | 3.2 | 2.6 |
| 6037900803 | 22.06 | 43.09 | 40-45% | 8284 | Los Angeles | 17.6 | 75 | 7.4 | 38.8 | 32 | 20.9 | 0.5 | 4.5 | 3.4 |
| 6059110104 | 22.04 | 43.08 | 40-45% | 6024 | Orange | 10.7 | 73.7 | 15.6 | 14.5 | 40.3 | 2.6 | 0.3 | 39.3 | 2.9 |
| 6071000817 | 22.04 | 43.07 | 40-45% | 3264 | San Bernardino | 10.1 | 74.1 | 15.8 | 28 | 53.9 | 5.9 | 0.2 | 9 | 2.9 |
| 6095252704 | 22.04 | 43.06 | 40-45% | 5155 | Solano | 14.2 | 76.6 | 9.2 | 27.7 | 28.2 | 20 | 0.2 | 16.8 | 7.1 |
| 6037910002 | 22.04 | 43.04 | 40-45% | 7217 | Los Angeles | 14 | 76.4 | 9.6 | 56.8 | 35.5 | 3.8 | 0.4 | 1.2 | 2.3 |
| 6085505007 | 22.03 | 43.03 | 40-45% | 4083 | Santa Clara | 11.9 | 72.6 | 15.5 | 22.9 | 25.1 | 3.5 | 0.6 | 44.2 | 3.7 |
| 6073003212 | 22.02 | 43.02 | 40-45% | 4053 | San Diego | 11.8 | 71.8 | 16.4 | 44.9 | 15.8 | 10.9 | 0.1 | 24.4 | 3.9 |
| 6067007208 | 22.02 | 43.01 | 40-45% | 4495 | Sacramento | 14.8 | 75 | 10.2 | 23 | 65.7 | 2.1 | 0.9 | 4.6 | 3.8 |
| 6037555202 | 22.01 | 42.99 | 40-45% | 3399 | Los Angeles | 11.3 | 71.8 | 16.9 | 19.1 | 59.7 | 5.6 | 0.1 | 11.3 | 4.2 |
| 6053011400 | 22.00 | 42.98 | 40-45% | 3778 | Monterey | 12 | 76.7 | 11.3 | 29.5 | 62.2 | 1.9 | 1.3 | 2.3 | 2.8 |
| 6073003109 | 21.99 | 42.97 | 40-45% | 3358 | San Diego | 10.1 | 78.1 | 11.8 | 10 | 5.7 | 7.2 | 0.1 | 74 | 2.9 |
| 6037143100 | 21.98 | 42.96 | 40-45% | 3984 | Los Angeles | 7.8 | 78.8 | 13.4 | 12.3 | 75 | 4.2 | 0.2 | 5.7 | 2.6 |
| 6037408724 | 21.97 | 42.94 | 40-45% | 5362 | Los Angeles | 16.2 | 79.6 | 4.2 | 54.6 | 3.8 | 1.9 | 0 | 38.2 | 1.4 |
| 6095252316 | 21.96 | 42.93 | 40-45% | 3427 | Solano | 13.5 | 77 | 9.5 | 25.9 | 28.4 | 18.2 | 0.3 | 20 | 7.3 |
| 6001437800 | 21.94 | 42.92 | 40-45% | 4621 | Alameda | 12.6 | 77.4 | 10 | 37.6 | 16.9 | 7.9 | 0.2 | 33.3 | 4.1 |
| 6065043211 | 21.94 | 42.91 | 40-45% | 5486 | Riverside | 12.7 | 79.3 | 8 | 29.4 | 57.8 | 3.3 | 0.2 | 5.9 | 3.3 |
| 6085512027 | 21.94 | 42.89 | 40-45% | 4085 | Santa Clara | 12.4 | 74.2 | 13.4 | 29.7 | 42.6 | 5.3 | 0.3 | 17.7 | 4.4 |
| 6037401602 | 21.92 | 42.88 | 40-45% | 5282 | Los Angeles | 12.6 | 79 | 8.4 | 36.9 | 50.1 | 4.1 | 0.6 | 5 | 3.2 |
| 6037651002 | 21.92 | 42.87 | 40-45% | 4606 | Los Angeles | 9.6 | 73.4 | 17 | 17.2 | 40.2 | 2.3 | 0.3 | 36.3 | 3.6 |
| 6065043276 | 21.91 | 42.86 | 40-45% | 3620 | Riverside | 16.3 | 75 | 8.7 | 26.3 | 52.1 | 4.6 | 0.2 | 12.7 | 4.1 |
| 6037273502 | 21.90 | 42.84 | 40-45% | 2884 | Los Angeles | 5.4 | 89.1 | 5.5 | 9.5 | 78 | 3.2 | 0.5 | 4.4 | 4.4 |
| 6071010423 | 21.90 | 42.83 | 40-45% | 3786 | San Bernardino | 8.5 | 69.6 | 21.9 | 17.1 | 76.9 | 1 | 1.2 | 1.2 | 2.5 |
| 6073002302 | 21.89 | 42.82 | 40-45% | 6589 | San Diego | 18.7 | 75.7 | 5.6 | 57.4 | 6.4 | 10.1 | 0.2 | 24.1 | 1.7 |
| 6067009321 | 21.88 | 42.80 | 40-45% | 5573 | Sacramento | 15.4 | 76.4 | 8.2 | 20.7 | 24.9 | 15.4 | 0.2 | 33 | 5.8 |
| 6065049400 | 21.85 | 42.79 | 40-45% | 2978 | Riverside | 9.5 | 52.4 | 38.1 | 42.2 | 54.9 | 0.8 | 0.2 | 1.1 | 0.6 |
| 6081613501 | 21.85 | 42.78 | 40-45% | 4141 | San Mateo | 14 | 75.1 | 10.9 | 40.6 | 52.5 | 0.3 | 0.1 | 4.3 | 2.2 |
| 6037115201 | 21.85 | 42.77 | 40-45% | 6437 | Los Angeles | 8.8 | 80.6 | 10.6 | 24.7 | 40.1 | 6.3 | 0.4 | 24.4 | 4.1 |
| 6065043254 | 21.84 | 42.75 | 40-45% | 5011 | Riverside | 13.2 | 79.3 | 7.5 | 30.1 | 56.1 | 2.9 | 1 | 7 | 2.9 |
| 6073018905 | 21.83 | 42.74 | 40-45% | 6765 | San Diego | 17.2 | 74.4 | 8.4 | 61.6 | 32.4 | 1.9 | 0.3 | 1.7 | 2.1 |
| 6111003612 | 21.83 | 42.73 | 40-45% | 4355 | Ventura | 7.6 | 78.2 | 14.2 | 13.3 | 77.5 | 1.7 | 0.3 | 3.9 | 3.3 |
| 6085506401 | 21.83 | 42.72 | 40-45% | 4380 | Santa Clara | 12.4 | 76.9 | 10.7 | 27 | 44.5 | 4.6 | 0.2 | 20 | 3.6 |
| 6001405200 | 21.82 | 42.70 | 40-45% | 4597 | Alameda | 7.5 | 80.8 | 11.7 | 9.4 | 38 | 15.2 | 0.2 | 31.2 | 6 |
| 6073003101 | 21.81 | 42.69 | 40-45% | 3785 | San Diego | 13.2 | 72.5 | 14.3 | 44.3 | 5.6 | 43.1 | 0.3 | 4.6 | 2.1 |
| 6019005802 | 21.81 | 42.68 | 40-45% | 4195 | Fresno | 9.8 | 74.4 | 15.8 | 20.7 | 62.9 | 2.1 | 0.7 | 11.4 | 2.2 |
| 6037403500 | 21.81 | 42.67 | 40-45% | 1628 | Los Angeles | 8.5 | 66.1 | 25.4 | 32 | 41.2 | 2.5 | 0.1 | 22.1 | 2.1 |
| 6037186203 | 21.80 | 42.65 | 40-45% | 2936 | Los Angeles | 12.2 | 75.3 | 12.5 | 49.5 | 30.8 | 2 | 0 | 14 | 3.7 |
| 6009000120 | 21.79 | 42.64 | 40-45% | 4434 | Calaveras | 10.6 | 71.1 | 18.3 | 12 | 82.5 | 0.8 | 0.6 | 1.3 | 2.8 |
| 6037272201 | 21.79 | 42.63 | 40-45% | 2411 | Los Angeles | 9.7 | 82 | 8.3 | 38 | 44 | 4.4 | 0.4 | 10.2 | 3 |
| 6037651221 | 21.78 | 42.62 | 40-45% | 3291 | Los Angeles | 10.5 | 74 | 15.5 | 11.3 | 39 | 4 | 0.2 | 41.8 | 3.7 |

| | | | | | | | | | | | | | | |
|---|---|---|---|---|---|---|---|---|---|---|---|---|---|---|
| 6067008138 | 21.78 | 42.60 | 40-45% | 3568 | Sacramento | 11.5 | 70.3 | 18.2 | 21.2 | 66.8 | 3.1 | 0.7 | 4.2 | 4 |
| 6023011100 | 21.77 | 42.59 | 40-45% | 4976 | Humboldt | 13.8 | 74.5 | 11.7 | 12.2 | 78.5 | 0.9 | 3.3 | 0.9 | 4.2 |
| 6037620002 | 21.77 | 42.58 | 40-45% | 3609 | Los Angeles | 10.7 | 79.1 | 10.2 | 15.6 | 66.1 | 1.9 | 0.3 | 11.4 | 4.6 |
| 6059075701 | 21.77 | 42.57 | 40-45% | 6879 | Orange | 13.6 | 74.3 | 12.1 | 44.1 | 43.7 | 2.1 | 0.1 | 7.9 | 2.1 |
| 6007000502 | 21.77 | 42.55 | 40-45% | 4204 | Butte | 7.9 | 88.9 | 3.2 | 17.7 | 64 | 3.6 | 0.6 | 10 | 4.2 |
| 6097150611 | 21.75 | 42.54 | 40-45% | 4067 | Sonoma | 15.7 | 75.3 | 9 | 31.3 | 56 | 1.8 | 0.5 | 7.1 | 3.3 |
| 6059099203 | 21.74 | 42.53 | 40-45% | 6029 | Orange | 12.2 | 74.8 | 13 | 20.6 | 17.7 | 0.5 | 0 | 60 | 1.2 |
| 6067007015 | 21.74 | 42.51 | 40-45% | 4997 | Sacramento | 14.9 | 74.8 | 10.3 | 17.5 | 40.2 | 14.4 | 0.6 | 22.7 | 4.6 |
| 6081600700 | 21.74 | 42.50 | 40-45% | 7568 | San Mateo | 10.1 | 77.5 | 12.4 | 36 | 7.2 | 2.9 | 0.1 | 51.3 | 2.5 |
| 6083002210 | 21.74 | 42.49 | 40-45% | 6035 | Santa Barbara | 17.4 | 75.2 | 7.4 | 63.2 | 27.2 | 0.9 | 0.5 | 6.5 | 1.8 |
| 6021010501 | 21.74 | 42.48 | 40-45% | 3456 | Glenn | 16 | 74 | 10 | 68.7 | 27.7 | 0.3 | 0.6 | 1.9 | 0.8 |
| 6073003112 | 21.74 | 42.46 | 40-45% | 4574 | San Diego | 13.6 | 77.6 | 8.8 | 41.7 | 7.4 | 23.9 | 0.1 | 23.6 | 3.4 |
| 6059075505 | 21.69 | 42.45 | 40-45% | 3599 | Orange | 12.5 | 74.7 | 12.8 | 41.1 | 41.9 | 1.5 | 0.7 | 12.1 | 2.7 |
| 6037463602 | 21.69 | 42.44 | 40-45% | 5051 | Los Angeles | 5.4 | 82.4 | 12.2 | 16.1 | 47.9 | 7.3 | 0.2 | 25.1 | 3.4 |
| 6037273800 | 21.68 | 42.43 | 40-45% | 3107 | Los Angeles | 8.7 | 82.7 | 8.6 | 19.4 | 67 | 2.8 | 0.5 | 6.8 | 3.6 |
| 6033000400 | 21.68 | 42.41 | 40-45% | 5574 | Lake | 12.1 | 69.3 | 18.6 | 17.7 | 74.1 | 0.8 | 2.9 | 2.1 | 2.4 |
| 6059063803 | 21.68 | 42.40 | 40-45% | 4437 | Orange | 10.1 | 78.2 | 11.7 | 31.3 | 61.3 | 1 | 0.1 | 3.9 | 2.4 |
| 6001437900 | 21.67 | 42.39 | 40-45% | 2338 | Alameda | 15.6 | 77.5 | 6.9 | 60.2 | 11.7 | 6.8 | 0.5 | 17.4 | 3.5 |
| 6059052517 | 21.66 | 42.38 | 40-45% | 10096 | Orange | 15.5 | 79.4 | 5.1 | 8 | 41.5 | 1.5 | 0.1 | 44.2 | 4.8 |
| 6067008117 | 21.65 | 42.36 | 40-45% | 2084 | Sacramento | 10.8 | 71.5 | 17.7 | 12.8 | 74.1 | 4.2 | 1.1 | 2.6 | 5.1 |
| 6095251300 | 21.64 | 42.35 | 40-45% | 2938 | Solano | 10.5 | 73 | 16.5 | 18.9 | 58.4 | 9.8 | 0.4 | 6.6 | 5.8 |
| 6037135111 | 21.64 | 42.34 | 40-45% | 2967 | Los Angeles | 10.8 | 76.8 | 12.4 | 23.3 | 58.3 | 4.1 | 0.3 | 10 | 3.9 |
| 6059021913 | 21.64 | 42.33 | 40-45% | 8140 | Orange | 14.5 | 76.2 | 9.3 | 63.6 | 24 | 0.7 | 0.3 | 9.9 | 1.6 |
| 6037141102 | 21.64 | 42.31 | 40-45% | 2869 | Los Angeles | 10.3 | 78.5 | 11.2 | 11.3 | 74.4 | 4.9 | 0.1 | 5.9 | 3.3 |
| 6081607600 | 21.63 | 42.30 | 40-45% | 3342 | San Mateo | 14.2 | 72 | 13.8 | 25.8 | 51.1 | 1 | 0.1 | 18.1 | 3.9 |
| 6073020306 | 21.63 | 42.29 | 40-45% | 8694 | San Diego | 11.1 | 77.3 | 11.6 | 19.8 | 60.1 | 3.7 | 0.2 | 11.8 | 4.3 |
| 6001444400 | 21.63 | 42.28 | 40-45% | 5114 | Alameda | 14.3 | 77.7 | 8 | 53 | 20.3 | 3.8 | 0.2 | 20 | 2.7 |
| 6085500400 | 21.62 | 42.26 | 40-45% | 2369 | Santa Clara | 12.8 | 77.2 | 10 | 37.4 | 46.4 | 4.3 | 0.2 | 8.7 | 3.1 |
| 6013317000 | 21.61 | 42.25 | 40-45% | 2144 | Contra Costa | 8.3 | 82 | 9.7 | 15.2 | 74.5 | 2.3 | 0.4 | 3.5 | 4.1 |
| 6037503901 | 21.60 | 42.24 | 40-45% | 2702 | Los Angeles | 11.7 | 74.1 | 14.2 | 42.6 | 38.2 | 1.9 | 0.5 | 14.3 | 2.4 |
| 6071009118 | 21.60 | 42.22 | 40-45% | 22862 | San Bernardino | 19.4 | 74.8 | 5.8 | 50 | 27.2 | 14 | 0.4 | 5.1 | 3.3 |
| 6111007000 | 21.59 | 42.21 | 40-45% | 3907 | Ventura | 11.3 | 74.9 | 13.8 | 41.3 | 44 | 1.5 | 0.1 | 11.2 | 1.9 |
| 6073006802 | 21.58 | 42.20 | 40-45% | 5032 | San Diego | 9.9 | 80.4 | 9.7 | 24 | 60 | 5.6 | 0.2 | 5.2 | 4.9 |
| 6065044701 | 21.58 | 42.19 | 40-45% | 3555 | Riverside | 8.9 | 67.7 | 23.4 | 31.6 | 55.1 | 4.8 | 0.7 | 5.1 | 2.6 |
| 6083002011 | 21.56 | 42.17 | 40-45% | 5317 | Santa Barbara | 13.8 | 72.2 | 14 | 53.6 | 38.1 | 1.6 | 0.6 | 4.5 | 1.7 |
| 6085504414 | 21.55 | 42.16 | 40-45% | 5092 | Santa Clara | 11.9 | 76.8 | 11.3 | 6.8 | 10.6 | 1.3 | 0 | 78.9 | 2.4 |
| 6065042740 | 21.55 | 42.15 | 40-45% | 2017 | Riverside | 0.7 | 28.3 | 71 | 7.8 | 83.9 | 3.8 | 0.4 | 2.6 | 1.4 |
| 6065042411 | 21.55 | 42.14 | 40-45% | 2540 | Riverside | 11.1 | 79.9 | 9 | 36.7 | 35 | 19.3 | 0.4 | 5.2 | 3.5 |
| 6067007427 | 21.51 | 42.12 | 40-45% | 6840 | Sacramento | 16.4 | 77.8 | 5.8 | 16.1 | 56.1 | 8.3 | 0.6 | 13.1 | 5.8 |
| 6059099605 | 21.51 | 42.11 | 40-45% | 3690 | Orange | 10.7 | 73.7 | 15.6 | 15.8 | 61.6 | 0.7 | 0.2 | 18 | 3.7 |
| 6029006008 | 21.51 | 42.10 | 40-45% | 5956 | Kern | 7.6 | 69.6 | 22.8 | 7.8 | 86.8 | 1.3 | 0.7 | 1.2 | 2.1 |
| 6085505600 | 21.50 | 42.09 | 40-45% | 3880 | Santa Clara | 6.3 | 84.1 | 9.6 | 19.5 | 53.2 | 3.9 | 0.4 | 17.8 | 5.3 |
| 6037702502 | 21.50 | 42.07 | 40-45% | 4048 | Los Angeles | 8.7 | 70.7 | 20.6 | 12.3 | 46 | 20.2 | 0 | 16.1 | 5.3 |
| 6081606300 | 21.50 | 42.06 | 40-45% | 4073 | San Mateo | 9.1 | 69.7 | 21.2 | 27.8 | 46.3 | 2.3 | 0.1 | 20.1 | 3.3 |
| 6059099241 | 21.50 | 42.05 | 40-45% | 4274 | Orange | 10.4 | 77.5 | 12.1 | 19.3 | 44.4 | 1.7 | 0.2 | 31.3 | 3.2 |
| 6065044505 | 21.49 | 42.04 | 40-45% | 6479 | Riverside | 12.6 | 65.5 | 21.9 | 56.4 | 39.3 | 1.1 | 0.5 | 1.5 | 1.2 |
| 6059063906 | 21.49 | 42.02 | 40-45% | 6591 | Orange | 10.9 | 84.1 | 5 | 44 | 44.2 | 1.4 | 0.4 | 7.4 | 2.7 |
| 6061021304 | 21.48 | 42.01 | 40-45% | 5307 | Placer | 10.6 | 74.2 | 15.2 | 12.2 | 81.8 | 0.3 | 1.5 | 1.1 | 3.1 |
| 6037701502 | 21.47 | 42.00 | 40-45% | 3841 | Los Angeles | 5.3 | 73.5 | 21.2 | 10 | 72.6 | 3.5 | 0.2 | 10.1 | 3.6 |
| 6045010900 | 21.46 | 41.99 | 40-45% | 4332 | Mendocino | 12.7 | 74 | 13.3 | 31.1 | 62.7 | 0.6 | 2 | 1.5 | 2.1 |
| 6037800328 | 21.45 | 41.97 | 40-45% | 2640 | Los Angeles | 10.6 | 81.1 | 8.3 | 8.9 | 75.6 | 2.4 | 0.2 | 9.4 | 3.6 |
| 6095252305 | 21.45 | 41.96 | 40-45% | 4711 | Solano | 12.7 | 74.8 | 12.5 | 17.9 | 48.2 | 10.5 | 0.6 | 17.4 | 5.5 |
| 6037271701 | 21.44 | 41.95 | 40-45% | 5850 | Los Angeles | 9 | 80.7 | 10.3 | 13.7 | 51.7 | 4.7 | 0.2 | 25.2 | 4.5 |
| 6071011206 | 21.44 | 41.93 | 40-45% | 995 | San Bernardino | 9.2 | 72.4 | 18.4 | 15.6 | 79.4 | 0.7 | 1 | 1 | 2.3 |
| 6001441503 | 21.44 | 41.92 | 40-45% | 5389 | Alameda | 21.8 | 73.7 | 4.5 | 4.2 | 9.9 | 1.7 | 0.2 | 80.6 | 3.4 |
| 6011000400 | 21.43 | 41.91 | 40-45% | 2495 | Colusa | 11.6 | 71.1 | 17.3 | 35.5 | 58.3 | 1.9 | 2.1 | 0.9 | 1.2 |
| 6037920112 | 21.42 | 41.90 | 40-45% | 4287 | Los Angeles | 11.1 | 73.8 | 15.1 | 18.4 | 68.9 | 2.3 | 0.2 | 7.8 | 2.4 |
| 6073016902 | 21.41 | 41.88 | 40-45% | 2341 | San Diego | 12.7 | 74.6 | 12.7 | 15.5 | 58.7 | 0.9 | 21.1 | 1.5 | 2.2 |
| 6037670002 | 21.41 | 41.87 | 40-45% | 4001 | Los Angeles | 13.3 | 74.9 | 11.8 | 37.7 | 38.7 | 4 | 0.3 | 14.8 | 4.3 |
| 6037503402 | 21.40 | 41.86 | 40-45% | 4273 | Los Angeles | 12.6 | 74.3 | 13.1 | 54 | 39.4 | 0.4 | 0.2 | 5 | 1.1 |
| 6075031400 | 21.40 | 41.85 | 40-45% | 6676 | San Francisco | 9.2 | 78.7 | 12.1 | 25.7 | 9.6 | 15.1 | 0.2 | 46.8 | 2.6 |
| 6067009403 | 21.39 | 41.83 | 40-45% | 2038 | Sacramento | 10.6 | 74.5 | 14.9 | 21.3 | 70.8 | 1 | 0.2 | 4.6 | 2.1 |
| 6085503902 | 21.38 | 41.82 | 40-45% | 5440 | Santa Clara | 19 | 72.7 | 8.3 | 63.9 | 14.6 | 1.1 | 0.3 | 18.5 | 1.5 |
| 6075033201 | 21.38 | 41.81 | 40-45% | 3683 | San Francisco | 1.6 | 92.4 | 6 | 17.9 | 45.9 | 7.2 | 0.2 | 22.4 | 6.4 |
| 6065042745 | 21.37 | 41.80 | 40-45% | 4614 | Riverside | 10.6 | 61.8 | 27.6 | 27.2 | 61 | 4.3 | 0.5 | 4.7 | 2.3 |
| 6099000504 | 21.37 | 41.78 | 40-45% | 8692 | Stanislaus | 13 | 74.3 | 12.7 | 22.7 | 54.4 | 3 | 0.3 | 15.1 | 4.5 |

| | | | | | | | | | | | | | | |
|---|---|---|---|---|---|---|---|---|---|---|---|---|---|---|
| 6073008505 | 21.36 | 41.77 | 40-45% | 5605 | San Diego | 9.3 | 75.9 | 14.8 | 23.2 | 56.9 | 1.9 | 0.4 | 14.3 | 3.3 |
| 6071007306 | 21.35 | 41.76 | 40-45% | 5859 | San Bernardino | 14.4 | 73.8 | 11.8 | 24.1 | 32.9 | 9.8 | 0.3 | 29.1 | 3.8 |
| 6059021815 | 21.35 | 41.75 | 40-45% | 7751 | Orange | 14.1 | 75.4 | 10.5 | 13.4 | 48.7 | 1.4 | 0.3 | 33.6 | 2.7 |
| 6037401304 | 21.34 | 41.73 | 40-45% | 5642 | Los Angeles | 8.1 | 73.4 | 18.5 | 26.5 | 53.8 | 2.4 | 0 | 14.6 | 2.8 |
| 6001436401 | 21.34 | 41.72 | 40-45% | 7042 | Alameda | 11.6 | 77.1 | 11.3 | 28.6 | 37.1 | 14.7 | 0.6 | 14 | 4.9 |
| 6037461400 | 21.33 | 41.71 | 40-45% | 3204 | Los Angeles | 11.2 | 71.4 | 17.4 | 21.3 | 56.2 | 8.9 | 0.1 | 9.9 | 3.7 |
| 6111008101 | 21.32 | 41.70 | 40-45% | 3433 | Ventura | 12.3 | 75.9 | 11.8 | 23.7 | 64.9 | 0.9 | 0.2 | 8.1 | 2.1 |
| 6037461700 | 21.32 | 41.68 | 40-45% | 1385 | Los Angeles | 7 | 70.8 | 22.2 | 15.5 | 55.6 | 19.2 | 0.1 | 6.9 | 2.6 |
| 6065042013 | 21.30 | 41.67 | 40-45% | 8333 | Riverside | 13.5 | 80.7 | 5.8 | 29.7 | 47.9 | 7.8 | 0.2 | 10.7 | 3.8 |
| 6037574902 | 21.28 | 41.66 | 40-45% | 4783 | Los Angeles | 7.7 | 86.4 | 5.9 | 20.6 | 44.8 | 10 | 0.4 | 19.2 | 5 |
| 6067007433 | 21.28 | 41.64 | 40-45% | 7656 | Sacramento | 16.4 | 76.2 | 7.4 | 13.4 | 57 | 8.5 | 0.5 | 15.3 | 5.3 |
| 6087110700 | 21.27 | 41.63 | 40-45% | 3357 | Santa Cruz | 16.5 | 74.3 | 9.2 | 71.3 | 23.2 | 0.8 | 0.4 | 2.9 | 1.4 |
| 6073012800 | 21.27 | 41.62 | 40-45% | 3913 | San Diego | 13.9 | 71.1 | 15 | 61.7 | 29.6 | 2.2 | 0.2 | 4.6 | 1.7 |
| 6001440306 | 21.27 | 41.61 | 40-45% | 3841 | Alameda | 13.8 | 77.5 | 8.7 | 11 | 8.4 | 9 | 0.1 | 66.2 | 5.3 |
| 6013387000 | 21.26 | 41.59 | 40-45% | 2532 | Contra Costa | 10.1 | 72.1 | 17.8 | 11.2 | 43.7 | 9 | 0.2 | 31.8 | 4.1 |
| 6037300502 | 21.25 | 41.58 | 40-45% | 6026 | Los Angeles | 10.2 | 79.3 | 10.5 | 14.3 | 54.9 | 0.8 | 0.2 | 27 | 2.8 |
| 6101050601 | 21.25 | 41.57 | 40-45% | 6029 | Sutter | 13.8 | 71.5 | 14.7 | 16.1 | 60.7 | 1.4 | 1 | 17.7 | 3 |
| 6059042307 | 21.25 | 41.56 | 40-45% | 6900 | Orange | 11.6 | 75.7 | 12.7 | 22.4 | 59.7 | 1.2 | 0.1 | 13.6 | 3 |
| 6053000702 | 21.25 | 41.54 | 40-45% | 6371 | Monterey | 23.5 | 73.3 | 3.2 | 97.7 | 1.6 | 0.2 | 0.1 | 0.2 | 0.2 |
| 6077004704 | 21.25 | 41.53 | 40-45% | 4894 | San Joaquin | 12.2 | 71.4 | 16.4 | 31.4 | 63.3 | 0.6 | 0.4 | 2.5 | 1.8 |
| 6073020602 | 21.24 | 41.52 | 40-45% | 5859 | San Diego | 14.8 | 77 | 8.2 | 47.6 | 44.2 | 2.6 | 0.7 | 3 | 1.9 |
| 6001451101 | 21.24 | 41.51 | 40-45% | 7081 | Alameda | 15.7 | 76.5 | 7.8 | 15.5 | 63.6 | 2.7 | 0.3 | 13.8 | 4.1 |
| 6007002700 | 21.24 | 41.49 | 40-45% | 5478 | Butte | 13 | 68.9 | 18.1 | 9.1 | 79.6 | 1.1 | 3 | 3.1 | 4.1 |
| 6007002400 | 21.23 | 41.48 | 40-45% | 5157 | Butte | 7 | 71.3 | 21.7 | 7.2 | 83.9 | 0.6 | 2.9 | 1.2 | 4.2 |
| 6013318000 | 21.23 | 41.47 | 40-45% | 3267 | Contra Costa | 9.8 | 78 | 12.2 | 15.3 | 72.6 | 2.9 | 0.8 | 3 | 5.5 |
| 6001435300 | 21.23 | 41.46 | 40-45% | 4479 | Alameda | 13.9 | 74.2 | 11.9 | 32.1 | 27.3 | 22.7 | 0.6 | 12.9 | 4.4 |
| 6037295103 | 21.22 | 41.44 | 40-45% | 4875 | Los Angeles | 10.4 | 69.4 | 20.2 | 21.7 | 61.3 | 3 | 0.2 | 10.4 | 3.4 |
| 6111004711 | 21.22 | 41.43 | 40-45% | 3432 | Ventura | 13.1 | 73.1 | 13.8 | 53 | 6.6 | 1.6 | 0.1 | 36.4 | 2.2 |
| 6037900608 | 21.21 | 41.42 | 40-45% | 3536 | Los Angeles | 17.5 | 74.3 | 8.2 | 44.1 | 24 | 25.1 | 0.2 | 3.3 | 3.4 |
| 6071000819 | 21.20 | 41.40 | 40-45% | 5077 | San Bernardino | 13.7 | 70.8 | 15.5 | 22.5 | 51.6 | 3.8 | 0.3 | 19.4 | 2.5 |
| 6001432200 | 21.20 | 41.39 | 40-45% | 4080 | Alameda | 12 | 68.7 | 19.3 | 24.7 | 40.3 | 20.4 | 0.2 | 10.4 | 4 |
| 6037134423 | 21.20 | 41.38 | 40-45% | 3414 | Los Angeles | 9.8 | 71.5 | 18.7 | 12.3 | 67.4 | 2.5 | 0.1 | 14.4 | 3.3 |
| 6037920040 | 21.20 | 41.37 | 40-45% | 3352 | Los Angeles | 15.4 | 77.6 | 7 | 26.1 | 50.5 | 6.1 | 0.4 | 13.3 | 3.6 |
| 6085501800 | 21.19 | 41.35 | 40-45% | 5085 | Santa Clara | 14.3 | 77.5 | 8.2 | 54.2 | 37 | 1.3 | 0.3 | 4.9 | 2.3 |
| 6037576602 | 21.19 | 41.34 | 40-45% | 3995 | Los Angeles | 4.1 | 84.3 | 11.6 | 22.3 | 57.9 | 8.2 | 0.3 | 7.2 | 4.1 |
| 6065043807 | 21.19 | 41.33 | 40-45% | 5743 | Riverside | 16.7 | 73.6 | 9.7 | 38.1 | 50.3 | 4.3 | 1.2 | 3.9 | 2.2 |
| 6029000908 | 21.19 | 41.32 | 40-45% | 5493 | Kern | 15.8 | 74.7 | 9.5 | 43.9 | 45.1 | 4.1 | 1 | 3.2 | 2.6 |
| 6045010300 | 21.19 | 41.30 | 40-45% | 4272 | Mendocino | 8.7 | 71.4 | 19.9 | 12.4 | 81.5 | 1.4 | 1.5 | 1 | 2.3 |
| 6065042729 | 21.19 | 41.29 | 40-45% | 9184 | Riverside | 10.2 | 58.9 | 30.9 | 24.6 | 61.1 | 6 | 0.4 | 5.4 | 2.5 |
| 6037188201 | 21.18 | 41.28 | 40-45% | 3270 | Los Angeles | 7 | 83.9 | 9.1 | 17.5 | 60.4 | 4.2 | 0.2 | 14.1 | 3.7 |
| 6013313205 | 21.18 | 41.27 | 40-45% | 1724 | Contra Costa | 15.7 | 80 | 4.3 | 46.8 | 22.9 | 6.4 | 0.2 | 20 | 3.7 |
| 6013302009 | 21.17 | 41.25 | 40-45% | 5641 | Contra Costa | 17 | 77.9 | 5.1 | 25.8 | 25.7 | 24.3 | 0.4 | 17.4 | 6.4 |
| 6097150603 | 21.17 | 41.24 | 40-45% | 7249 | Sonoma | 11.1 | 71.4 | 17.5 | 32.9 | 59.6 | 1.2 | 0.4 | 3.5 | 2.5 |
| 6037113101 | 21.17 | 41.23 | 40-45% | 3558 | Los Angeles | 8.9 | 70.1 | 21 | 20.5 | 60.4 | 3.1 | 0.4 | 12.3 | 3.2 |
| 6087110502 | 21.16 | 41.22 | 40-45% | 6088 | Santa Cruz | 17.3 | 76.4 | 6.3 | 85.2 | 11.7 | 0.2 | 0.1 | 2 | 0.9 |
| 6073008359 | 21.16 | 41.20 | 40-45% | 3975 | San Diego | 11.9 | 82.3 | 5.8 | 19.6 | 31.2 | 5.9 | 0.4 | 38.1 | 4.8 |
| 6073020028 | 21.16 | 41.19 | 40-45% | 3479 | San Diego | 23.4 | 75.7 | 0.9 | 82.4 | 9 | 2.4 | 0.2 | 5.2 | 0.8 |
| 6037117301 | 21.16 | 41.18 | 40-45% | 3851 | Los Angeles | 11.4 | 74 | 14.6 | 32.5 | 45.2 | 5 | 0.2 | 14.4 | 2.7 |
| 6055201005 | 21.14 | 41.17 | 40-45% | 2418 | Napa | 14.7 | 76.3 | 9 | 25.6 | 38.4 | 5.9 | 0.5 | 24.8 | 4.8 |
| 6037702501 | 21.13 | 41.15 | 40-45% | 4625 | Los Angeles | 10.9 | 76.5 | 12.6 | 16.4 | 63.4 | 3.1 | 0.1 | 12.5 | 4.5 |
| 6073013503 | 21.13 | 41.14 | 40-45% | 5776 | San Diego | 13.7 | 75.4 | 10.9 | 30.7 | 47.1 | 11.9 | 0.5 | 5 | 4.8 |
| 6037503301 | 21.13 | 41.13 | 40-45% | 3394 | Los Angeles | 13.5 | 76.1 | 10.4 | 62.6 | 33.4 | 0.4 | 0.2 | 2.2 | 1.3 |
| 6065042739 | 21.13 | 41.11 | 40-45% | 7097 | Riverside | 16.2 | 76.5 | 7.3 | 30.6 | 48.7 | 6.8 | 0.4 | 8.9 | 4.5 |
| 6083001704 | 21.13 | 41.10 | 40-45% | 2565 | Santa Barbara | 12.7 | 74.8 | 12.5 | 56.7 | 39.7 | 0.5 | 0.2 | 2 | 0.9 |
| 6085502910 | 21.12 | 41.09 | 40-45% | 3656 | Santa Clara | 13.6 | 73.3 | 13.1 | 26.8 | 52.5 | 2.5 | 0.3 | 13.6 | 4.3 |
| 6059001503 | 21.11 | 41.08 | 40-45% | 5099 | Orange | 12.7 | 75.4 | 11.9 | 33.1 | 55.6 | 1.1 | 0.3 | 7.3 | 2.6 |
| 6075022803 | 21.11 | 41.06 | 40-45% | 4595 | San Francisco | 9.8 | 82.1 | 8.1 | 52.8 | 33.3 | 1.2 | 0.2 | 9.9 | 2.6 |
| 6083002303 | 21.11 | 41.05 | 40-45% | 6765 | Santa Barbara | 18.9 | 74.2 | 6.9 | 88.4 | 5.6 | 0.4 | 0.1 | 4.8 | 0.7 |
| 6095250502 | 21.09 | 41.04 | 40-45% | 3128 | Solano | 10.9 | 74.1 | 15 | 13.9 | 35.6 | 21.2 | 0.3 | 23.2 | 5.8 |
| 6083001604 | 21.09 | 41.03 | 40-45% | 5190 | Santa Barbara | 10.9 | 75.4 | 13.7 | 47.5 | 48.3 | 0.6 | 0.3 | 1.8 | 1.5 |
| 6037800204 | 21.08 | 41.01 | 40-45% | 6740 | Los Angeles | 9 | 68.8 | 22.2 | 5.5 | 81.8 | 1.2 | 0.1 | 7.7 | 3.8 |
| 6067008141 | 21.08 | 41.00 | 40-45% | 6799 | Sacramento | 16.1 | 76.5 | 7.4 | 27.1 | 60.5 | 5 | 0.6 | 3.3 | 3.5 |
| 6037574202 | 21.07 | 40.99 | 40-45% | 2161 | Los Angeles | 12.4 | 70.1 | 17.5 | 28.6 | 55.9 | 5.5 | 0.3 | 6.6 | 3.2 |
| 6059088202 | 21.06 | 40.98 | 40-45% | 3005 | Orange | 11.8 | 75 | 13.2 | 28.8 | 33.8 | 1.4 | 0.1 | 33.4 | 2.5 |
| 6075033204 | 21.06 | 40.96 | 40-45% | 3821 | San Francisco | 4.3 | 84.8 | 10.9 | 15.9 | 38.8 | 6.2 | 0.5 | 33.5 | 5.1 |
| 6013339002 | 21.06 | 40.95 | 40-45% | 5574 | Contra Costa | 7.3 | 80.3 | 12.4 | 12.6 | 67.3 | 2.6 | 0.1 | 13.4 | 3.9 |

| | | | | | | | | | | | | | | |
|---|---|---|---|---|---|---|---|---|---|---|---|---|---|---|
| 6085512308 | 21.06 | 40.94 | 40-45% | 7006 | Santa Clara | 14.7 | 75.4 | 9.9 | 23.6 | 56.1 | 1.4 | 0.2 | 14.5 | 4.1 |
| 6073019207 | 21.05 | 40.93 | 40-45% | 8416 | San Diego | 14.9 | 72.1 | 13 | 43.3 | 47.8 | 2.4 | 0.3 | 4.2 | 2 |
| 6059052418 | 21.05 | 40.91 | 40-45% | 12096 | Orange | 16.9 | 78.6 | 4.5 | 11.4 | 35.6 | 2.6 | 0.1 | 45 | 5.4 |
| 6073016503 | 21.05 | 40.90 | 40-45% | 2784 | San Diego | 13.7 | 74.5 | 11.8 | 21.5 | 64.4 | 5.5 | 0.5 | 3.4 | 4.7 |
| 6037503702 | 21.05 | 40.89 | 40-45% | 5040 | Los Angeles | 12.2 | 74.6 | 13.2 | 48.9 | 43.3 | 1.6 | 0.2 | 4.4 | 1.5 |
| 6037432000 | 21.04 | 40.88 | 40-45% | 8182 | Los Angeles | 9.1 | 71.4 | 19.5 | 16.1 | 25.7 | 0.9 | 0.1 | 55.6 | 1.6 |
| 6029002807 | 21.04 | 40.86 | 40-45% | 3894 | Kern | 9.8 | 71.6 | 18.6 | 18.3 | 69.7 | 4.2 | 0.4 | 5 | 2.4 |
| 6007000700 | 21.01 | 40.85 | 40-45% | 4694 | Butte | 9.5 | 79.4 | 11.1 | 10.4 | 80.4 | 1.5 | 0.6 | 3.2 | 3.9 |
| 6037900506 | 21.01 | 40.84 | 40-45% | 4352 | Los Angeles | 18 | 75.7 | 6.3 | 39.5 | 22.4 | 31.3 | 0.3 | 2.8 | 3.7 |
| 6073002905 | 21.00 | 40.82 | 40-45% | 4022 | San Diego | 10.4 | 82.1 | 7.5 | 23.1 | 52 | 10.5 | 0.3 | 9.7 | 4.4 |
| 6037430724 | 21.00 | 40.81 | 40-45% | 4812 | Los Angeles | 10.6 | 74.5 | 14.9 | 10.7 | 21.3 | 1.8 | 0.1 | 64.1 | 2 |
| 6037403406 | 21.00 | 40.80 | 40-45% | 2796 | Los Angeles | 10 | 79 | 11 | 21.1 | 20.3 | 1.8 | 0 | 53.7 | 3.1 |
| 6065043315 | 20.99 | 40.79 | 40-45% | 2073 | Riverside | 11 | 75.8 | 13.2 | 26.6 | 67.3 | 1.4 | 1.1 | 1.6 | 1.9 |
| 6037400403 | 20.99 | 40.77 | 40-45% | 3815 | Los Angeles | 9.2 | 77.8 | 13 | 32.2 | 54 | 3.3 | 0.2 | 7.7 | 2.6 |
| 6059075506 | 20.99 | 40.76 | 40-45% | 3437 | Orange | 11.6 | 71 | 17.4 | 27 | 54.1 | 1.6 | 0.5 | 13.5 | 3.3 |
| 6037275311 | 20.98 | 40.75 | 40-45% | 4993 | Los Angeles | 9.4 | 73.7 | 16.9 | 28 | 43.5 | 3.2 | 0.1 | 21.2 | 3.9 |
| 6047001801 | 20.98 | 40.74 | 40-45% | 4288 | Merced | 10.8 | 81.4 | 7.8 | 29.6 | 48.2 | 3.2 | 0.6 | 15.5 | 2.9 |
| 6073003202 | 20.97 | 40.72 | 40-45% | 4551 | San Diego | 13.8 | 72.6 | 13.6 | 66.9 | 14.7 | 5.5 | 0.1 | 10.7 | 2.1 |
| 6065042724 | 20.97 | 40.71 | 40-45% | 3182 | Riverside | 20.2 | 74.7 | 5.1 | 35.6 | 43.3 | 7.4 | 0.3 | 9.4 | 4.1 |
| 6097151900 | 20.97 | 40.70 | 40-45% | 3158 | Sonoma | 10.3 | 73.4 | 16.3 | 25 | 65.4 | 2.5 | 0.9 | 2.5 | 3.7 |
| 6001408400 | 20.97 | 40.69 | 40-45% | 3323 | Alameda | 16.7 | 75.7 | 7.6 | 37.9 | 3 | 51.2 | 0.5 | 5.2 | 2.3 |
| 6073008510 | 20.97 | 40.67 | 40-45% | 6626 | San Diego | 9.8 | 75.2 | 15 | 22.5 | 48.7 | 5.4 | 0.4 | 18.6 | 4.5 |
| 6019004303 | 20.96 | 40.66 | 40-45% | 4162 | Fresno | 7.6 | 60.9 | 31.5 | 14.3 | 76.1 | 2.3 | 0.4 | 4.7 | 2.2 |
| 6045010500 | 20.95 | 40.65 | 40-45% | 4439 | Mendocino | 14.8 | 70.1 | 15.1 | 34.2 | 59.1 | 0.5 | 1.6 | 1.8 | 2.7 |
| 6059099508 | 20.95 | 40.64 | 40-45% | 4500 | Orange | 9.6 | 71.4 | 19 | 21.8 | 68.2 | 0.6 | 0.5 | 5.8 | 3 |
| 6093000701 | 20.95 | 40.62 | 40-45% | 3755 | Siskiyou | 8.4 | 68.8 | 22.8 | 5.7 | 87.1 | 0.4 | 2.2 | 0.8 | 3.8 |
| 6085503804 | 20.94 | 40.61 | 40-45% | 4980 | Santa Clara | 13.2 | 72.6 | 14.2 | 27.4 | 15.2 | 3.6 | 0.2 | 51.2 | 2.4 |
| 6071002015 | 20.94 | 40.60 | 40-45% | 4777 | San Bernardino | 13.1 | 77.1 | 9.8 | 33.5 | 53.5 | 4.2 | 0.3 | 6.1 | 2.3 |
| 6001428500 | 20.93 | 40.59 | 40-45% | 3183 | Alameda | 10.1 | 73.8 | 16.1 | 9.3 | 45.6 | 6.7 | 0.3 | 31.2 | 6.8 |
| 6095250604 | 20.93 | 40.57 | 40-45% | 3842 | Solano | 10.5 | 78.7 | 10.8 | 12 | 27.8 | 18.2 | 0.3 | 35.9 | 5.9 |
| 6085509202 | 20.92 | 40.56 | 40-45% | 4480 | Santa Clara | 11.2 | 75.8 | 13 | 21.9 | 46.4 | 1.5 | 0.2 | 26.5 | 3.5 |
| 6037920042 | 20.92 | 40.55 | 40-45% | 6769 | Los Angeles | 13.8 | 76.6 | 9.6 | 28.7 | 47.7 | 6.3 | 0.4 | 12.8 | 4.1 |
| 6037273100 | 20.91 | 40.53 | 40-45% | 2197 | Los Angeles | 9.6 | 75.5 | 14.9 | 22.2 | 66.5 | 2.1 | 0.1 | 6.1 | 3 |
| 6029003805 | 20.91 | 40.52 | 40-45% | 8774 | Kern | 17.7 | 76.1 | 6.2 | 23.6 | 63.3 | 1.9 | 0.6 | 7.9 | 2.7 |
| 6061020300 | 20.90 | 40.51 | 40-45% | 4520 | Placer | 9.6 | 70.1 | 20.3 | 12.3 | 81.9 | 0.6 | 0.6 | 1.1 | 3.4 |
| 6037267800 | 20.89 | 40.50 | 40-45% | 2917 | Los Angeles | 14.2 | 69.8 | 16 | 8.7 | 66.7 | 1.8 | 0.2 | 16.7 | 6 |
| 6065044605 | 20.89 | 40.48 | 40-45% | 4803 | Riverside | 15 | 72.1 | 12.9 | 43.2 | 36.2 | 14.6 | 0.4 | 3.4 | 2.2 |
| 6037296402 | 20.89 | 40.47 | 40-45% | 3091 | Los Angeles | 11.4 | 73.7 | 14.9 | 52 | 38.2 | 2.9 | 0.4 | 3.4 | 3.1 |
| 6097151305 | 20.88 | 40.46 | 40-45% | 5405 | Sonoma | 13.4 | 76.6 | 10 | 36 | 53.4 | 2.2 | 0.4 | 4.5 | 3.5 |
| 6085508601 | 20.88 | 40.45 | 40-45% | 3668 | Santa Clara | 13.9 | 73 | 13.1 | 19.6 | 43.9 | 0.8 | 0.2 | 31.2 | 4.3 |
| 6097152903 | 20.88 | 40.43 | 40-45% | 5114 | Sonoma | 17.2 | 75.6 | 7.2 | 52.7 | 31.2 | 4.2 | 1 | 8.3 | 2.6 |
| 6001409700 | 20.87 | 40.42 | 40-45% | 4696 | Alameda | 19.1 | 74.1 | 6.8 | 39 | 2.7 | 49.1 | 0.3 | 6.6 | 2.3 |
| 6081610800 | 20.86 | 40.41 | 40-45% | 4721 | San Mateo | 17.4 | 77 | 5.6 | 67.3 | 21.5 | 2.3 | 0.1 | 6 | 2.8 |
| 6037431002 | 20.84 | 40.40 | 40-45% | 3163 | Los Angeles | 10.8 | 69.8 | 19.4 | 26.3 | 53.4 | 5.3 | 0.2 | 11.8 | 3.1 |
| 6071007404 | 20.84 | 40.38 | 40-45% | 4406 | San Bernardino | 10.4 | 69.8 | 19.8 | 28.6 | 54.2 | 9 | 0.5 | 4.3 | 3.3 |
| 6065043220 | 20.83 | 40.37 | 40-45% | 4594 | Riverside | 16 | 79 | 5 | 38.3 | 43.8 | 3.7 | 0.5 | 9.5 | 4.2 |
| 6037920332 | 20.83 | 40.36 | 40-45% | 2337 | Los Angeles | 6.8 | 85.3 | 7.9 | 16.8 | 73 | 2.4 | 0.6 | 5.3 | 1.8 |
| 6037265700 | 20.83 | 40.35 | 40-45% | 4720 | Los Angeles | 8.4 | 63.8 | 27.8 | 4.4 | 81.8 | 1.9 | 0 | 7.6 | 4.2 |
| 6075025900 | 20.82 | 40.33 | 40-45% | 4261 | San Francisco | 9.3 | 73.9 | 16.8 | 18.7 | 18.5 | 10.1 | 0.1 | 49.1 | 3.4 |
| 6085508004 | 20.82 | 40.32 | 40-45% | 6090 | Santa Clara | 13.8 | 79.4 | 6.8 | 7.4 | 28.9 | 1.2 | 0.2 | 58.6 | 3.8 |
| 6037113212 | 20.81 | 40.31 | 40-45% | 3069 | Los Angeles | 9.7 | 75 | 15.3 | 23.2 | 51.1 | 4.9 | 0.2 | 17.7 | 2.8 |
| 6073000800 | 20.81 | 40.30 | 40-45% | 4280 | San Diego | 7.5 | 81.7 | 10.8 | 21.1 | 61.8 | 7.3 | 0.4 | 5.5 | 3.9 |
| 6013308002 | 20.81 | 40.28 | 40-45% | 4194 | Contra Costa | 13 | 80.4 | 6.6 | 25.7 | 37.9 | 15.9 | 0.4 | 13.9 | 6.3 |
| 6037570800 | 20.79 | 40.27 | 40-45% | 5540 | Los Angeles | 12.9 | 76.7 | 10.4 | 28.3 | 50.1 | 5 | 0.2 | 12.1 | 4.4 |
| 6085512309 | 20.78 | 40.26 | 40-45% | 4996 | Santa Clara | 13.2 | 76 | 10.8 | 25.1 | 59.6 | 1.5 | 0.4 | 9.5 | 3.8 |
| 6067009504 | 20.78 | 40.24 | 40-45% | 2059 | Sacramento | 17 | 71.6 | 11.4 | 50 | 44.4 | 0.7 | 0.5 | 2.2 | 2.1 |
| 6075025500 | 20.77 | 40.23 | 40-45% | 8471 | San Francisco | 9.7 | 76.5 | 13.8 | 31.8 | 20.9 | 1.3 | 0.1 | 43.8 | 2.1 |
| 6037111206 | 20.75 | 40.22 | 40-45% | 4490 | Los Angeles | 9.6 | 71.2 | 19.2 | 20.7 | 56.9 | 3 | 0.2 | 16.3 | 2.9 |
| 6097150612 | 20.75 | 40.21 | 40-45% | 4325 | Sonoma | 11 | 78.5 | 10.5 | 15.4 | 75.1 | 0.6 | 0.6 | 5.2 | 3.2 |
| 6037701000 | 20.75 | 40.19 | 40-45% | 5431 | Los Angeles | 7.8 | 73.5 | 18.7 | 6 | 79.1 | 2.3 | 0.2 | 8.5 | 4 |
| 6037910202 | 20.74 | 40.18 | 40-45% | 5223 | Los Angeles | 10.6 | 76.6 | 12.8 | 24.9 | 58.1 | 6.8 | 0.6 | 6.7 | 2.9 |
| 6101050503 | 20.74 | 40.17 | 40-45% | 6966 | Sutter | 15.1 | 70.9 | 14 | 20.2 | 42.1 | 1.5 | 0.8 | 31.6 | 3.8 |
| 6013319000 | 20.73 | 40.16 | 40-45% | 7412 | Contra Costa | 10.6 | 79.2 | 10.2 | 18.3 | 68.9 | 2.6 | 0.6 | 5.4 | 4.2 |
| 6081601501 | 20.73 | 40.14 | 40-45% | 5063 | San Mateo | 8.7 | 74.2 | 17.1 | 10.3 | 11.9 | 1.8 | 0.1 | 73 | 3 |
| 6073010004 | 20.72 | 40.13 | 40-45% | 4679 | San Diego | 11.7 | 74.4 | 13.9 | 76.6 | 8 | 2.6 | 0.1 | 11 | 1.6 |
| 6037650603 | 20.71 | 40.12 | 40-45% | 3958 | Los Angeles | 8.9 | 70.4 | 20.7 | 9.3 | 48.7 | 1.3 | 0.3 | 36.1 | 4.3 |

| | | | | | | | | | | | | | | |
|---|---|---|---|---|---|---|---|---|---|---|---|---|---|---|
| 6085504412 | 20.70 | 40.11 | 40-45% | 4901 | Santa Clara | 13.9 | 78.4 | 7.7 | 26.5 | 11.2 | 1.8 | 0.3 | 56.8 | 3.3 |
| 6065047000 | 20.70 | 40.09 | 40-45% | 1749 | Riverside | 16.1 | 69.7 | 14.2 | 34.7 | 58.3 | 4 | 1.1 | 0.4 | 1.5 |
| 6057000701 | 20.69 | 40.08 | 40-45% | 7436 | Nevada | 7.6 | 71.4 | 21 | 5.2 | 90.5 | 0.3 | 0.7 | 1 | 2.3 |
| 6059063807 | 20.68 | 40.07 | 40-45% | 4957 | Orange | 8.6 | 82.3 | 9.1 | 21.8 | 58.2 | 2.9 | 0.3 | 14.3 | 2.4 |
| 6111004504 | 20.67 | 40.06 | 40-45% | 5389 | Ventura | 16.9 | 74.7 | 8.4 | 71.1 | 6.7 | 2.3 | 0.1 | 17.5 | 2.2 |
| 6113011101 | 20.67 | 40.04 | 40-45% | 3070 | Yolo | 15.4 | 72.1 | 12.5 | 49.3 | 44.4 | 1.2 | 0.7 | 2.1 | 2.3 |
| 6073013301 | 20.67 | 40.03 | 40-45% | 5180 | San Diego | 11.4 | 75.6 | 13 | 62.7 | 27.9 | 2.3 | 0.2 | 4.1 | 2.8 |
| 6095252703 | 20.67 | 40.02 | 40-45% | 3846 | Solano | 15.2 | 79.3 | 5.5 | 27 | 22.6 | 21 | 0.5 | 21.5 | 7.4 |
| 6037274100 | 20.66 | 40.01 | 40-45% | 4418 | Los Angeles | 8 | 79.7 | 12.3 | 9.7 | 67.1 | 4.9 | 0.1 | 13.9 | 4.3 |
| 6073001500 | 20.66 | 39.99 | 35-40% | 3934 | San Diego | 10.5 | 81.9 | 7.6 | 31.2 | 53.1 | 6.6 | 0.6 | 5.1 | 3.3 |
| 6001442400 | 20.65 | 39.98 | 35-40% | 6253 | Alameda | 13 | 77.5 | 9.5 | 28.8 | 31.1 | 3.1 | 0.2 | 33.3 | 3.6 |
| 6059052416 | 20.65 | 39.97 | 35-40% | 4006 | Orange | 12.2 | 78.7 | 9.1 | 32 | 51.9 | 1.5 | 0.6 | 11.7 | 2.3 |
| 6073016402 | 20.65 | 39.95 | 35-40% | 7452 | San Diego | 12.2 | 75.9 | 11.9 | 25.8 | 60.7 | 5.1 | 0.7 | 3.6 | 4.1 |
| 6095253105 | 20.64 | 39.94 | 35-40% | 5958 | Solano | 14.1 | 78.5 | 7.4 | 30.3 | 46.8 | 10.7 | 0.6 | 6.1 | 5.5 |
| 6073003107 | 20.63 | 39.93 | 35-40% | 5992 | San Diego | 13.4 | 74.8 | 11.8 | 38.8 | 13.3 | 18.7 | 0.6 | 24.1 | 4.7 |
| 6085504505 | 20.63 | 39.92 | 35-40% | 4418 | Santa Clara | 13.4 | 77.3 | 9.3 | 16.9 | 13.4 | 2.8 | 0.2 | 61.7 | 5 |
| 6037403303 | 20.63 | 39.90 | 35-40% | 2523 | Los Angeles | 8.8 | 76.9 | 14.3 | 33.5 | 19.1 | 2.4 | 0.1 | 42.2 | 2.7 |
| 6037403319 | 20.62 | 39.89 | 35-40% | 4260 | Los Angeles | 9.9 | 79.7 | 10.4 | 22.3 | 21.5 | 6 | 0.1 | 47.8 | 2.4 |
| 6037700501 | 20.62 | 39.88 | 35-40% | 3687 | Los Angeles | 3 | 82.6 | 14.4 | 9 | 78.5 | 2.8 | 0.1 | 6.3 | 3.4 |
| 6059063202 | 20.62 | 39.87 | 35-40% | 3556 | Orange | 11.4 | 76.1 | 12.5 | 19.4 | 74.6 | 0.3 | 0.1 | 3.1 | 2.4 |
| 6059032028 | 20.62 | 39.85 | 35-40% | 3102 | Orange | 11.3 | 82.2 | 6.5 | 29 | 55.1 | 1.6 | 0.2 | 10.5 | 3.6 |
| 6067008010 | 20.62 | 39.84 | 35-40% | 4890 | Sacramento | 9.5 | 73.9 | 16.6 | 8.7 | 78.7 | 2.4 | 0.6 | 5.1 | 4.5 |
| 6089012400 | 20.61 | 39.83 | 35-40% | 4100 | Shasta | 8.6 | 73.6 | 17.8 | 5.4 | 86.2 | 0.5 | 2.5 | 1.2 | 4.2 |
| 6059110303 | 20.61 | 39.82 | 35-40% | 4986 | Orange | 12.3 | 75.9 | 11.8 | 31.2 | 35.5 | 3.4 | 0.3 | 26.4 | 3.1 |
| 6085504323 | 20.60 | 39.80 | 35-40% | 5741 | Santa Clara | 12.2 | 78.9 | 8.9 | 13.7 | 11.2 | 2.1 | 0.1 | 70.1 | 2.8 |
| 6037650102 | 20.60 | 39.79 | 35-40% | 2248 | Los Angeles | 9.2 | 79.6 | 11.2 | 20.3 | 41.8 | 2.6 | 0 | 29.8 | 5.4 |
| 6059063805 | 20.60 | 39.78 | 35-40% | 2415 | Orange | 12.8 | 71.5 | 15.7 | 16 | 72.8 | 1 | 0.2 | 7.6 | 2.5 |
| 6065050400 | 20.59 | 39.77 | 35-40% | 10378 | Riverside | 17.3 | 77.1 | 5.6 | 31.2 | 50.1 | 4.7 | 0.3 | 9.4 | 4.3 |
| 6059110108 | 20.58 | 39.75 | 35-40% | 2733 | Orange | 8.7 | 74 | 17.3 | 23.5 | 55.4 | 2.5 | 0.1 | 14.5 | 4.1 |
| 6085506304 | 20.57 | 39.74 | 35-40% | 4958 | Santa Clara | 13.7 | 80.2 | 6.1 | 30.3 | 31.4 | 4.2 | 0.2 | 30.2 | 3.7 |
| 6067009614 | 20.57 | 39.73 | 35-40% | 6658 | Sacramento | 14.8 | 78.8 | 6.4 | 20.9 | 29.2 | 14.4 | 0.2 | 28.6 | 6.7 |
| 6059099232 | 20.55 | 39.71 | 35-40% | 5325 | Orange | 9 | 69.1 | 21.9 | 9.8 | 65.5 | 0.4 | 0.1 | 21.4 | 2.9 |
| 6085506203 | 20.55 | 39.70 | 35-40% | 6163 | Santa Clara | 15.7 | 77.9 | 6.4 | 12.9 | 21.9 | 3 | 0.3 | 58 | 3.9 |
| 6037403322 | 20.54 | 39.69 | 35-40% | 3808 | Los Angeles | 8 | 79.3 | 12.7 | 20.5 | 25.8 | 2.5 | 0.1 | 48.6 | 2.4 |
| 6037103400 | 20.53 | 39.68 | 35-40% | 6143 | Los Angeles | 9.5 | 77 | 13.5 | 25.1 | 61.6 | 1.4 | 0.4 | 8.1 | 3.4 |
| 6083002305 | 20.53 | 39.66 | 35-40% | 7556 | Santa Barbara | 19 | 74 | 7 | 87.9 | 6.2 | 0.9 | 0.3 | 3.7 | 1 |
| 6081607702 | 20.52 | 39.65 | 35-40% | 2859 | San Mateo | 12.2 | 75.7 | 12.1 | 37.1 | 30.6 | 1.9 | 0.2 | 25 | 5.1 |
| 6035040400 | 20.52 | 39.64 | 35-40% | 9422 | Lassen | 1.7 | 95.8 | 2.5 | 33.4 | 38.4 | 21.9 | 1.7 | 0.6 | 4.1 |
| 6073019403 | 20.51 | 39.63 | 35-40% | 5255 | San Diego | 13.8 | 79.3 | 6.9 | 49.1 | 38.3 | 2.5 | 0.3 | 7.3 | 2.4 |
| 6037571400 | 20.50 | 39.61 | 35-40% | 4770 | Los Angeles | 12.2 | 75.5 | 12.3 | 27.3 | 43.2 | 10.1 | 0.4 | 15.3 | 3.6 |
| 6085504421 | 20.50 | 39.60 | 35-40% | 4733 | Santa Clara | 12.2 | 76.9 | 10.9 | 12.5 | 15.3 | 3.3 | 0.2 | 65.3 | 3.4 |
| 6067009407 | 20.49 | 39.59 | 35-40% | 9944 | Sacramento | 16.2 | 76.1 | 7.7 | 37.9 | 51.7 | 1.8 | 0.4 | 4.8 | 3.4 |
| 6037401203 | 20.49 | 39.58 | 35-40% | 5216 | Los Angeles | 11.1 | 75.5 | 13.4 | 40.5 | 45.1 | 2.5 | 0.3 | 9 | 2.7 |
| 6037910208 | 20.49 | 39.56 | 35-40% | 6340 | Los Angeles | 14.8 | 77.6 | 7.6 | 47.3 | 31.1 | 11.8 | 0.5 | 6.3 | 2.9 |
| 6037143300 | 20.49 | 39.55 | 35-40% | 5871 | Los Angeles | 10.1 | 78.6 | 11.3 | 15.8 | 70.1 | 4.4 | 0.2 | 6.1 | 3.5 |
| 6001441524 | 20.48 | 39.54 | 35-40% | 4010 | Alameda | 22.1 | 72.2 | 5.7 | 4 | 10.7 | 2.2 | 0.2 | 79.3 | 3.6 |
| 6037401102 | 20.48 | 39.53 | 35-40% | 3101 | Los Angeles | 13.2 | 76.6 | 10.2 | 37.7 | 51.6 | 1.9 | 0.3 | 5.9 | 2.6 |
| 6037430801 | 20.48 | 39.51 | 35-40% | 6342 | Los Angeles | 10.6 | 80.7 | 8.7 | 13.9 | 14 | 1.5 | 0.1 | 68.7 | 1.8 |
| 6071009714 | 20.47 | 39.50 | 35-40% | 3606 | San Bernardino | 12.9 | 74.4 | 12.7 | 26.8 | 56.3 | 10.3 | 0.4 | 2.9 | 3.2 |
| 6007000300 | 20.47 | 39.49 | 35-40% | 4410 | Butte | 13 | 72.9 | 14.1 | 18.5 | 70.2 | 2.3 | 1.4 | 3.9 | 3.7 |
| 6065042737 | 20.46 | 39.48 | 35-40% | 2401 | Riverside | 19.4 | 74.4 | 6.2 | 31.9 | 50.1 | 6.2 | 0.3 | 8.3 | 3.3 |
| 6037113231 | 20.44 | 39.46 | 35-40% | 2125 | Los Angeles | 9.6 | 72.1 | 18.3 | 11.2 | 70.4 | 3.7 | 0.1 | 10.5 | 4 |
| 6037463700 | 20.44 | 39.45 | 35-40% | 2236 | Los Angeles | 7.3 | 68.1 | 24.6 | 13.6 | 66.4 | 3.8 | 0 | 12.9 | 3.4 |
| 6071010416 | 20.43 | 39.44 | 35-40% | 3433 | San Bernardino | 9.6 | 73.6 | 16.8 | 14.6 | 74.1 | 3.8 | 0.6 | 2.8 | 4.2 |
| 6073020707 | 20.43 | 39.42 | 35-40% | 4734 | San Diego | 17.3 | 77.8 | 4.9 | 53.6 | 34.5 | 3.4 | 0.4 | 5.2 | 2.9 |
| 6065042708 | 20.43 | 39.41 | 35-40% | 5171 | Riverside | 16.4 | 77.8 | 5.8 | 36.5 | 51 | 3.4 | 0.3 | 5.6 | 3.1 |
| 6071002022 | 20.43 | 39.40 | 35-40% | 11426 | San Bernardino | 15.4 | 79.4 | 5.2 | 26.8 | 43.4 | 9.5 | 0.2 | 16.9 | 3.2 |
| 6037462900 | 20.42 | 39.39 | 35-40% | 3818 | Los Angeles | 13.1 | 71.9 | 15 | 28.6 | 49.4 | 3.1 | 0.2 | 14.6 | 4.1 |
| 6067005901 | 20.41 | 39.37 | 35-40% | 5892 | Sacramento | 9.2 | 61.6 | 29.2 | 9.2 | 79.3 | 2.6 | 0.5 | 5.2 | 3.2 |
| 6065043242 | 20.40 | 39.36 | 35-40% | 8148 | Riverside | 19.6 | 74.9 | 5.5 | 26.4 | 53.5 | 5.1 | 0.5 | 9.7 | 4.9 |
| 6065041905 | 20.39 | 39.35 | 35-40% | 2935 | Riverside | 17.8 | 75.9 | 6.3 | 57 | 31.6 | 4.7 | 0.5 | 4.5 | 1.8 |
| 6041105000 | 20.39 | 39.34 | 35-40% | 6590 | Marin | 16.9 | 71 | 12.1 | 23.4 | 58.7 | 4.6 | 0.3 | 8.6 | 4.4 |
| 6071009712 | 20.39 | 39.32 | 35-40% | 5978 | San Bernardino | 16.6 | 71.8 | 11.6 | 37.7 | 49.7 | 7.7 | 0.5 | 1.7 | 2.7 |
| 6067005605 | 20.38 | 39.31 | 35-40% | 3124 | Sacramento | 14.8 | 75.2 | 10 | 27.7 | 50.6 | 11.1 | 0.6 | 4.7 | 5.2 |
| 6083002206 | 20.38 | 39.30 | 35-40% | 4782 | Santa Barbara | 18.9 | 68.3 | 12.8 | 65.7 | 28.1 | 1.7 | 0.3 | 2.6 | 1.6 |
| 6037700902 | 20.38 | 39.29 | 35-40% | 6517 | Los Angeles | 8.5 | 78.5 | 13 | 6.1 | 74.2 | 3 | 0.2 | 11.6 | 5 |

| | | | | | | | | | | | | | | |
|---|---|---|---|---|---|---|---|---|---|---|---|---|---|---|
| 6067009310 | 20.37 | 39.27 | 35-40% | 7000 | Sacramento | 12.2 | 77.8 | 10 | 19.3 | 64.8 | 3.9 | 0.7 | 6.5 | 4.8 |
| 6085512025 | 20.37 | 39.26 | 35-40% | 3203 | Santa Clara | 13 | 70.4 | 16.6 | 23.9 | 48 | 2.3 | 0.3 | 21 | 4.4 |
| 6037186201 | 20.37 | 39.25 | 35-40% | 3068 | Los Angeles | 10.2 | 76.3 | 13.5 | 42.3 | 15.5 | 2.2 | 0.6 | 37.4 | 2 |
| 6037278102 | 20.37 | 39.24 | 35-40% | 3158 | Los Angeles | 6.6 | 78.4 | 15 | 8.9 | 78.1 | 4.3 | 0.2 | 5 | 3.5 |
| 6095250605 | 20.36 | 39.22 | 35-40% | 4223 | Solano | 10 | 79.7 | 10.3 | 12.2 | 26.1 | 18.9 | 0.3 | 36.7 | 5.8 |
| 6037910712 | 20.35 | 39.21 | 35-40% | 2772 | Los Angeles | 15.7 | 78.7 | 5.6 | 61.5 | 17.1 | 16.1 | 0.1 | 3.3 | 1.8 |
| 6001441923 | 20.34 | 39.20 | 35-40% | 5605 | Alameda | 15.7 | 70.8 | 13.5 | 17 | 18.9 | 4 | 0.4 | 54.5 | 5.2 |
| 6097150701 | 20.34 | 39.19 | 35-40% | 4609 | Sonoma | 11.8 | 76.9 | 11.3 | 20.1 | 71.7 | 1.1 | 0.6 | 3.1 | 3.4 |
| 6059062625 | 20.33 | 39.17 | 35-40% | 4381 | Orange | 10.1 | 57.7 | 32.2 | 38.1 | 49.8 | 0.7 | 0.1 | 9 | 2.4 |
| 6095252202 | 20.33 | 39.16 | 35-40% | 9825 | Solano | 14.6 | 79.3 | 6.1 | 20.4 | 38.2 | 10.7 | 0.3 | 24.4 | 6 |
| 6083001206 | 20.32 | 39.15 | 35-40% | 4480 | Santa Barbara | 12.4 | 82.8 | 4.8 | 56.1 | 36.5 | 0.8 | 0.3 | 4.4 | 2 |
| 6073008504 | 20.32 | 39.13 | 35-40% | 6021 | San Diego | 10.2 | 73.7 | 16.1 | 23.2 | 64.5 | 1.3 | 0.2 | 7 | 3.7 |
| 6113010401 | 20.32 | 39.12 | 35-40% | 4532 | Yolo | 10.9 | 74.2 | 14.9 | 19.9 | 62 | 1.6 | 0.2 | 12.4 | 3.8 |
| 6029000505 | 20.31 | 39.11 | 35-40% | 3764 | Kern | 10.1 | 76.3 | 13.6 | 15.6 | 77.6 | 1.4 | 0.8 | 2.1 | 2.4 |
| 6065042738 | 20.31 | 39.10 | 35-40% | 5729 | Riverside | 15.6 | 77.9 | 6.5 | 27.8 | 55.6 | 5.4 | 0.2 | 7.3 | 3.6 |
| 6073019805 | 20.31 | 39.08 | 35-40% | 3763 | San Diego | 12.1 | 66.2 | 21.7 | 38.1 | 51.3 | 3.6 | 0.3 | 3.9 | 2.8 |
| 6037910601 | 20.29 | 39.07 | 35-40% | 6460 | Los Angeles | 18.9 | 75.1 | 6 | 67.8 | 15.5 | 13 | 0.5 | 1.4 | 1.7 |
| 6073002904 | 20.28 | 39.06 | 35-40% | 7316 | San Diego | 3.9 | 91.7 | 4.4 | 17.3 | 58.6 | 5.9 | 0.2 | 13.6 | 4.4 |
| 6065043818 | 20.28 | 39.05 | 35-40% | 3832 | Riverside | 20 | 73.1 | 6.9 | 36 | 41.5 | 5.3 | 0.4 | 14.2 | 2.6 |
| 6073014101 | 20.27 | 39.03 | 35-40% | 3507 | San Diego | 13 | 74.8 | 12.2 | 46.5 | 38.4 | 7.8 | 0.4 | 3.8 | 3.2 |
| 6037134422 | 20.27 | 39.02 | 35-40% | 4684 | Los Angeles | 11.1 | 73.4 | 15.5 | 16 | 61.7 | 3.5 | 0 | 16 | 2.8 |
| 6001427900 | 20.27 | 39.01 | 35-40% | 4567 | Alameda | 9.8 | 78.2 | 12 | 12.3 | 55.8 | 4.6 | 0.2 | 21.7 | 5.5 |
| 6037504001 | 20.26 | 39.00 | 35-40% | 5709 | Los Angeles | 6.1 | 82.5 | 11.4 | 28.5 | 52.9 | 3.6 | 0.2 | 11.3 | 3.4 |
| 6067002600 | 20.26 | 38.98 | 35-40% | 2505 | Sacramento | 10.7 | 78.9 | 10.4 | 16.4 | 65.1 | 7.8 | 0.8 | 4.8 | 5.2 |
| 6055201601 | 20.26 | 38.97 | 35-40% | 2287 | Napa | 12.8 | 68.7 | 18.5 | 48.1 | 48.2 | 0.2 | 0.3 | 1.7 | 1.5 |
| 6079012401 | 20.26 | 38.96 | 35-40% | 6621 | San Luis Obispo | 16.1 | 75.1 | 8.8 | 50.7 | 43.4 | 0.8 | 0.4 | 2.8 | 1.8 |
| 6055200601 | 20.25 | 38.95 | 35-40% | 5016 | Napa | 12.4 | 74.9 | 12.7 | 36.1 | 59 | 0.4 | 0.3 | 2.7 | 1.6 |
| 6053001600 | 20.24 | 38.93 | 35-40% | 2642 | Monterey | 12.1 | 71.7 | 16.2 | 37.3 | 49.9 | 1.7 | 0.2 | 8.1 | 2.7 |
| 6073002804 | 20.24 | 38.92 | 35-40% | 4638 | San Diego | 5.8 | 84.6 | 9.6 | 16.8 | 66.1 | 4.4 | 0.2 | 8.6 | 3.8 |
| 6037265305 | 20.23 | 38.91 | 35-40% | 4082 | Los Angeles | 1.8 | 96.9 | 1.3 | 8.9 | 51.6 | 2.5 | 0.1 | 31.8 | 5 |
| 6059011503 | 20.23 | 38.90 | 35-40% | 1727 | Orange | 8.4 | 71.6 | 20 | 14.7 | 63.2 | 1.4 | 0.1 | 17.8 | 2.8 |
| 6037570901 | 20.22 | 38.88 | 35-40% | 5647 | Los Angeles | 11.7 | 75.4 | 12.9 | 23.9 | 56 | 4 | 0.2 | 12.4 | 3.5 |
| 6037576503 | 20.21 | 38.87 | 35-40% | 4454 | Los Angeles | 12.6 | 78.5 | 8.9 | 46.9 | 27.6 | 14.7 | 0.4 | 7.5 | 2.9 |
| 6037195202 | 20.21 | 38.86 | 35-40% | 3185 | Los Angeles | 10.3 | 78.1 | 11.6 | 13.2 | 67.3 | 2.2 | 0.3 | 13.5 | 3.5 |
| 6037920041 | 20.21 | 38.84 | 35-40% | 2871 | Los Angeles | 17.6 | 78.6 | 3.8 | 38.3 | 35.8 | 11.6 | 0.3 | 9.7 | 4.2 |
| 6037900609 | 20.21 | 38.83 | 35-40% | 5243 | Los Angeles | 19.1 | 75.8 | 5.1 | 50.9 | 19.8 | 23.2 | 0.3 | 2.8 | 2.9 |
| 6059052423 | 20.20 | 38.82 | 35-40% | 5545 | Orange | 13.4 | 81.2 | 5.4 | 24.6 | 53.3 | 2.1 | 0.1 | 16.6 | 3.2 |
| 6113010902 | 20.19 | 38.81 | 35-40% | 6189 | Yolo | 14.2 | 73.3 | 12.5 | 51.9 | 40.1 | 1.3 | 0.7 | 4 | 2.1 |
| 6111008900 | 20.18 | 38.79 | 35-40% | 3590 | Ventura | 18.4 | 74.1 | 7.5 | 83.1 | 10.9 | 1.2 | 0.3 | 3.3 | 1.2 |
| 6001442602 | 20.17 | 38.78 | 35-40% | 5074 | Alameda | 15.4 | 74.3 | 10.3 | 24.2 | 40.5 | 4.7 | 0.2 | 24.3 | 6.2 |
| 6075011100 | 20.15 | 38.77 | 35-40% | 5164 | San Francisco | 2.8 | 82.1 | 15.1 | 9.7 | 47.6 | 2.3 | 0.2 | 37.2 | 3.1 |
| 6061020805 | 20.15 | 38.76 | 35-40% | 3902 | Placer | 12.1 | 75.7 | 12.2 | 15.8 | 73.9 | 1.8 | 0.5 | 3.8 | 4.2 |
| 6109004200 | 20.15 | 38.74 | 35-40% | 3954 | Tuolumne | 7.1 | 62 | 30.9 | 6.8 | 88 | 0.4 | 1 | 1 | 2.8 |
| 6001450400 | 20.15 | 38.73 | 35-40% | 5968 | Alameda | 14.5 | 75.4 | 10.1 | 21.1 | 55 | 2.2 | 0.4 | 16.5 | 4.8 |
| 6073013903 | 20.14 | 38.72 | 35-40% | 4116 | San Diego | 11.4 | 68 | 20.6 | 39.1 | 33.6 | 9.7 | 0.4 | 13.3 | 3.9 |
| 6081600500 | 20.14 | 38.71 | 35-40% | 7443 | San Mateo | 11.6 | 76 | 12.4 | 30.6 | 9.8 | 2.4 | 0.1 | 54.4 | 2.6 |
| 6065050300 | 20.14 | 38.69 | 35-40% | 11161 | Riverside | 18.7 | 75.9 | 5.4 | 26.3 | 45.5 | 6.5 | 0.4 | 16.8 | 4.5 |
| 6037108102 | 20.14 | 38.68 | 35-40% | 3430 | Los Angeles | 8.5 | 72.2 | 19.3 | 9.7 | 54.8 | 1.8 | 0 | 31 | 2.6 |
| 6073013909 | 20.14 | 38.67 | 35-40% | 4489 | San Diego | 13.7 | 78.3 | 8 | 53.9 | 23.9 | 9.3 | 0.5 | 8.7 | 3.8 |
| 6075031202 | 20.13 | 38.66 | 35-40% | 3137 | San Francisco | 9.1 | 79.6 | 11.3 | 17.2 | 11.2 | 11.5 | 0.1 | 57.9 | 2.1 |
| 6083002809 | 20.12 | 38.64 | 35-40% | 5035 | Santa Barbara | 12.4 | 72.9 | 14.7 | 29.5 | 59.9 | 2.2 | 0.7 | 4.5 | 3.1 |
| 6111002500 | 20.12 | 38.63 | 35-40% | 4795 | Ventura | 7.7 | 68.8 | 23.5 | 10 | 84.3 | 0.8 | 0.5 | 2 | 2.6 |
| 6055200302 | 20.12 | 38.62 | 35-40% | 2504 | Napa | 13.2 | 75.1 | 11.7 | 35.4 | 58.5 | 0.3 | 0.4 | 2.5 | 2.9 |
| 6037703002 | 20.12 | 38.61 | 35-40% | 6605 | Los Angeles | 7.8 | 68.6 | 23.6 | 5.2 | 12.3 | 73.8 | 0.2 | 3.4 | 5.2 |
| 6073003211 | 20.11 | 38.59 | 35-40% | 3165 | San Diego | 12.4 | 74.2 | 13.4 | 52 | 15.8 | 6 | 0.3 | 23.3 | 2.7 |
| 6059075405 | 20.11 | 38.58 | 35-40% | 2980 | Orange | 11.5 | 72.4 | 16.1 | 48.9 | 41.7 | 1.8 | 0.2 | 5.8 | 1.5 |
| 6083002802 | 20.11 | 38.57 | 35-40% | 7024 | Santa Barbara | 12.4 | 77.2 | 10.4 | 37.1 | 47.9 | 4.8 | 0.8 | 5.9 | 3.4 |
| 6077004105 | 20.10 | 38.55 | 35-40% | 4920 | San Joaquin | 12.3 | 73.8 | 13.9 | 28 | 64.5 | 0.4 | 0.3 | 5 | 1.8 |
| 6065044521 | 20.10 | 38.54 | 35-40% | 1196 | Riverside | 14 | 73.9 | 12.1 | 30.4 | 59.4 | 4.3 | 2.2 | 2.1 | 1.7 |
| 6037275602 | 20.10 | 38.53 | 35-40% | 6470 | Los Angeles | 9.7 | 83.3 | 7 | 11.4 | 49.6 | 11 | 0.2 | 22.7 | 5.2 |
| 6037214400 | 20.09 | 38.52 | 35-40% | 2877 | Los Angeles | 5.1 | 89.2 | 5.7 | 9.2 | 79.5 | 2.4 | 0.1 | 4.7 | 4.1 |
| 6041129000 | 20.09 | 38.50 | 35-40% | 2359 | Marin | 15.7 | 75.4 | 8.9 | 14.7 | 25 | 41.9 | 0.3 | 12.2 | 6 |
| 6073003209 | 20.09 | 38.49 | 35-40% | 5385 | San Diego | 16.2 | 77.4 | 6.4 | 26.8 | 9.1 | 16 | 0.2 | 42.1 | 5.8 |
| 6065042014 | 20.09 | 38.48 | 35-40% | 10516 | Riverside | 15.4 | 79.8 | 4.8 | 28.2 | 47.8 | 8.6 | 0.3 | 11.8 | 3.3 |
| 6037570001 | 20.09 | 38.47 | 35-40% | 4463 | Los Angeles | 11.5 | 77.7 | 10.8 | 27.3 | 45.4 | 6.1 | 0.2 | 17.6 | 3.3 |
| 6019005512 | 20.08 | 38.45 | 35-40% | 4824 | Fresno | 15.3 | 77.1 | 7.6 | 20.2 | 64.7 | 1.9 | 0.6 | 9.4 | 3.2 |

| | | | | | | | | | | | | | | | |
|---|---|---|---|---|---|---|---|---|---|---|---|---|---|---|---|
| 6033000501 | 20.08 | 38.44 | 35-40% | 3222 | Lake | 10 | 68.9 | 21.1 | 11.5 | 79.2 | 1.7 | 2.7 | 0.8 | 4.1 |
| 6111003011 | 20.07 | 38.43 | 35-40% | 5397 | Ventura | 18.1 | 73.8 | 8.1 | 77.6 | 13.1 | 2.9 | 0.3 | 4.5 | 1.6 |
| 6037403321 | 20.07 | 38.42 | 35-40% | 6034 | Los Angeles | 10.9 | 77.5 | 11.6 | 26.3 | 25.2 | 5.2 | 0.1 | 40 | 3.2 |
| 6037267100 | 20.06 | 38.40 | 35-40% | 6087 | Los Angeles | 11.6 | 73.2 | 15.2 | 6.1 | 73.5 | 2.3 | 0.1 | 13.4 | 4.7 |
| 6037189701 | 20.05 | 38.39 | 35-40% | 3942 | Los Angeles | 6.7 | 82.2 | 11.1 | 11.1 | 71.1 | 5.2 | 0.2 | 8.5 | 3.9 |
| 6037501501 | 20.05 | 38.38 | 35-40% | 2244 | Los Angeles | 10.6 | 75 | 14.4 | 52.7 | 39.3 | 1.5 | 0.3 | 5 | 1.2 |
| 6007000201 | 20.03 | 38.37 | 35-40% | 4052 | Butte | 12.5 | 78.5 | 9 | 13.4 | 77.9 | 1.4 | 1.4 | 3.4 | 2.5 |
| 6037273600 | 20.03 | 38.35 | 35-40% | 2413 | Los Angeles | 11 | 78.8 | 10.2 | 17.1 | 71.6 | 3.4 | 0.3 | 3.8 | 3.8 |
| 6073020208 | 20.03 | 38.34 | 35-40% | 2501 | San Diego | 15.4 | 77.3 | 7.3 | 62.4 | 32 | 0.8 | 0.4 | 2.9 | 1.6 |
| 6007002900 | 20.03 | 38.33 | 35-40% | 3060 | Butte | 14.6 | 73.2 | 12.2 | 11.4 | 57.1 | 0.8 | 2.7 | 24.5 | 3.5 |
| 6089012101 | 20.02 | 38.32 | 35-40% | 4505 | Shasta | 14.5 | 71 | 14.5 | 10.1 | 80.3 | 0.6 | 3.4 | 2 | 3.6 |
| 6095252104 | 20.02 | 38.30 | 35-40% | 5536 | Solano | 13.1 | 79.9 | 7 | 9.9 | 55.8 | 7.2 | 0.3 | 21.8 | 5 |
| 6095252909 | 20.02 | 38.29 | 35-40% | 3235 | Solano | 13.7 | 79.6 | 6.7 | 16.3 | 68.3 | 4.6 | 0.2 | 5.7 | 5 |
| 6081609100 | 20.02 | 38.28 | 35-40% | 1525 | San Mateo | 12.9 | 80.3 | 6.8 | 24 | 61.4 | 0.8 | 0.1 | 9.2 | 4.5 |
| 6075010800 | 20.01 | 38.26 | 35-40% | 4578 | San Francisco | 5.2 | 76.5 | 18.3 | 3.6 | 46.8 | 0.9 | 0.1 | 46.4 | 2.3 |
| 6063000300 | 20.01 | 38.25 | 35-40% | 4760 | Plumas | 11.7 | 72.5 | 15.8 | 13.3 | 81.5 | 0.5 | 1.6 | 0.6 | 2.5 |
| 6101050800 | 20.00 | 38.24 | 35-40% | 3460 | Sutter | 11.9 | 75.3 | 12.8 | 13.7 | 79.8 | 0.4 | 1.5 | 1 | 3.6 |
| 6049000300 | 19.99 | 38.23 | 35-40% | 2993 | Modoc | 9.8 | 67.7 | 22.5 | 11.7 | 79.9 | 1.7 | 3.3 | 0.8 | 2.6 |
| 6037650604 | 19.97 | 38.21 | 35-40% | 5412 | Los Angeles | 11.9 | 76.7 | 11.4 | 18.3 | 28.9 | 5.4 | 0.3 | 43.1 | 4.1 |
| 6091010000 | 19.97 | 38.20 | 35-40% | 3240 | Sierra | 8.5 | 70.6 | 20.9 | 8.3 | 88.1 | 0.2 | 1.3 | 0.4 | 1.7 |
| 6037503801 | 19.96 | 38.19 | 35-40% | 4080 | Los Angeles | 12.3 | 76.4 | 11.3 | 41.2 | 38 | 1.5 | 0.4 | 16.5 | 2.5 |
| 6023001000 | 19.96 | 38.18 | 35-40% | 5906 | Humboldt | 5 | 90.2 | 4.8 | 15.1 | 71.6 | 2.8 | 1.6 | 3 | 5.9 |
| 6071000812 | 19.95 | 38.16 | 35-40% | 3845 | San Bernardino | 12.9 | 73.7 | 13.4 | 34.2 | 54.9 | 3.3 | 0.2 | 4.9 | 2.5 |
| 6067009011 | 19.95 | 38.15 | 35-40% | 3964 | Sacramento | 17.9 | 75.8 | 6.3 | 9.7 | 53 | 3.2 | 0.2 | 30 | 4 |
| 6065045233 | 19.95 | 38.14 | 35-40% | 4244 | Riverside | 15.1 | 78.6 | 6.3 | 41 | 49.9 | 3 | 0.6 | 3.9 | 1.6 |
| 6065941100 | 19.94 | 38.13 | 35-40% | 2051 | Riverside | 1.4 | 31.3 | 67.3 | 6.6 | 89.7 | 0.7 | 0.4 | 1.5 | 1.1 |
| 6071009716 | 19.93 | 38.11 | 35-40% | 6974 | San Bernardino | 17.4 | 71.6 | 11 | 33.4 | 44.7 | 15.3 | 0.6 | 2.1 | 4 |
| 6065042207 | 19.92 | 38.10 | 35-40% | 3017 | Riverside | 9.2 | 75 | 15.8 | 15 | 64.8 | 5.5 | 0.4 | 10.9 | 3.4 |
| 6077003602 | 19.91 | 38.09 | 35-40% | 3272 | San Joaquin | 13 | 74.3 | 12.7 | 45.8 | 47.6 | 1 | 0.5 | 3.1 | 2 |
| 6013392300 | 19.90 | 38.08 | 35-40% | 3102 | Contra Costa | 17.1 | 75.3 | 7.6 | 8.4 | 9.6 | 20.1 | 0.2 | 56.4 | 5.2 |
| 6065043228 | 19.90 | 38.06 | 35-40% | 4108 | Riverside | 14 | 79.1 | 6.9 | 31 | 53 | 4.3 | 0.3 | 6.7 | 4.7 |
| 6085509201 | 19.89 | 38.05 | 35-40% | 4603 | Santa Clara | 9.7 | 80.2 | 10.1 | 18.4 | 46.8 | 2.7 | 0.3 | 27.2 | 4.6 |
| 6059052525 | 19.89 | 38.04 | 35-40% | 15473 | Orange | 12.9 | 78.7 | 8.4 | 8.9 | 39.7 | 1.8 | 0.1 | 44.5 | 5 |
| 6059062646 | 19.88 | 38.02 | 35-40% | 3257 | Orange | 0.3 | 21.9 | 77.8 | 4.3 | 82.9 | 0.6 | 0.2 | 10.6 | 1.4 |
| 6085504102 | 19.88 | 38.01 | 35-40% | 5480 | Santa Clara | 15.7 | 76.1 | 8.2 | 71.6 | 10.7 | 1.5 | 0.4 | 14 | 1.8 |
| 6095251702 | 19.87 | 38.00 | 35-40% | 2578 | Solano | 16 | 77.9 | 6.1 | 16.2 | 17.8 | 27.7 | 0.2 | 31.1 | 6.9 |
| 6059062622 | 19.87 | 37.99 | 35-40% | 4072 | Orange | 1.5 | 31.4 | 67.1 | 8.1 | 76.4 | 1.1 | 0.2 | 12.2 | 2.1 |
| 6029005507 | 19.86 | 37.97 | 35-40% | 7198 | Kern | 16.5 | 73.7 | 9.8 | 24.4 | 48.7 | 17.5 | 0.6 | 3.5 | 5.3 |
| 6053000200 | 19.86 | 37.96 | 35-40% | 6884 | Monterey | 17.5 | 74.2 | 8.3 | 78.6 | 13.2 | 1.3 | 0.3 | 5.1 | 1.4 |
| 6085503315 | 19.86 | 37.95 | 35-40% | 7481 | Santa Clara | 14.3 | 78.2 | 7.5 | 34.9 | 8.4 | 3.4 | 0.3 | 50.2 | 2.7 |
| 6037269100 | 19.86 | 37.94 | 35-40% | 4359 | Los Angeles | 14.1 | 70.6 | 15.3 | 4.3 | 86.1 | 1.8 | 0 | 3.9 | 3.8 |
| 6065043291 | 19.85 | 37.92 | 35-40% | 8224 | Riverside | 11.2 | 68.1 | 20.7 | 20.7 | 62 | 3.9 | 0.4 | 9.8 | 3.3 |
| 6005000200 | 19.82 | 37.91 | 35-40% | 4672 | Amador | 8.5 | 69.9 | 21.6 | 8.3 | 86.3 | 0.4 | 0.9 | 0.6 | 3.4 |
| 6081613800 | 19.82 | 37.90 | 35-40% | 4005 | San Mateo | 10 | 78.4 | 11.6 | 25.7 | 67.9 | 0.5 | 0.2 | 2.7 | 2.9 |
| 6073010401 | 19.82 | 37.89 | 35-40% | 2458 | San Diego | 16.3 | 77.1 | 6.6 | 62.6 | 25.1 | 4.1 | 0.4 | 4.9 | 2.9 |
| 6071000815 | 19.82 | 37.87 | 35-40% | 3584 | San Bernardino | 10.2 | 76.5 | 13.3 | 23.7 | 54.5 | 5.1 | 0.3 | 14.2 | 2.3 |
| 6071002013 | 19.81 | 37.86 | 35-40% | 4207 | San Bernardino | 8.6 | 74.3 | 17.1 | 29.7 | 58.9 | 5.1 | 0.1 | 3.6 | 2.7 |
| 6085505900 | 19.81 | 37.85 | 35-40% | 7079 | Santa Clara | 11.5 | 73.4 | 15.1 | 19.4 | 51 | 3.2 | 0.1 | 22.6 | 3.7 |
| 6001440304 | 19.81 | 37.84 | 35-40% | 4674 | Alameda | 12.5 | 76.2 | 11.3 | 12.8 | 12.4 | 6.2 | 0.3 | 62.7 | 5.6 |
| 6037408629 | 19.80 | 37.82 | 35-40% | 2926 | Los Angeles | 9.3 | 73.4 | 17.3 | 22 | 20.2 | 0.9 | 0 | 55.3 | 1.6 |
| 6111001402 | 19.78 | 37.81 | 35-40% | 5677 | Ventura | 10.9 | 78.4 | 10.7 | 26.8 | 63.7 | 1.5 | 0.6 | 4.2 | 3.2 |
| 6077005209 | 19.78 | 37.80 | 35-40% | 6858 | San Joaquin | 18 | 77.6 | 4.4 | 30.4 | 42.5 | 7.8 | 0.2 | 13.8 | 5.3 |
| 6067008009 | 19.78 | 37.79 | 35-40% | 4407 | Sacramento | 10.6 | 74.4 | 15 | 9.7 | 80 | 2.5 | 0.6 | 3.2 | 3.9 |
| 6001451404 | 19.77 | 37.77 | 35-40% | 6610 | Alameda | 16.8 | 77.1 | 6.1 | 51.5 | 36.8 | 1.6 | 0.4 | 6.9 | 2.8 |
| 6073018300 | 19.76 | 37.76 | 35-40% | 2166 | San Diego | 5 | 79.1 | 15.9 | 12.4 | 81.2 | 1.3 | 0.5 | 1.8 | 2.7 |
| 6085508704 | 19.76 | 37.75 | 35-40% | 5227 | Santa Clara | 12.8 | 82.6 | 4.6 | 22.9 | 29.1 | 1.5 | 0.4 | 42.9 | 3.1 |
| 6083002707 | 19.76 | 37.73 | 35-40% | 2287 | Santa Barbara | 12.2 | 75.9 | 11.9 | 38.1 | 49.5 | 4.3 | 0.9 | 2.6 | 4.7 |
| 6055200802 | 19.75 | 37.72 | 35-40% | 5481 | Napa | 12.3 | 71.6 | 16.1 | 33.6 | 60.2 | 0.4 | 0.5 | 3.2 | 2.1 |
| 6037910602 | 19.75 | 37.71 | 35-40% | 3995 | Los Angeles | 18.6 | 74.3 | 7.1 | 58 | 18.2 | 17.3 | 0.2 | 3.7 | 2.6 |
| 6073020210 | 19.74 | 37.70 | 35-40% | 4639 | San Diego | 14.5 | 75.4 | 10.1 | 46.9 | 40.1 | 2.3 | 0.4 | 8.2 | 2.2 |
| 6001440100 | 19.73 | 37.68 | 35-40% | 2310 | Alameda | 12.8 | 67 | 20.2 | 16.4 | 35.9 | 9.4 | 0.1 | 33.5 | 4.6 |
| 6037900508 | 19.73 | 37.67 | 35-40% | 3334 | Los Angeles | 17.7 | 77.5 | 4.8 | 41.3 | 30 | 21.4 | 0.1 | 4.3 | 2.9 |
| 6005000402 | 19.72 | 37.66 | 35-40% | 4740 | Amador | 8.1 | 65.4 | 26.5 | 8.6 | 86.1 | 0.9 | 1.1 | 0.9 | 2.4 |
| 6037576802 | 19.72 | 37.65 | 35-40% | 3992 | Los Angeles | 8.1 | 85 | 6.9 | 29.7 | 49.4 | 9.6 | 0.5 | 6.9 | 3.9 |
| 6067009616 | 19.72 | 37.63 | 35-40% | 5814 | Sacramento | 13.8 | 77.2 | 9 | 19.3 | 53.1 | 9.4 | 0.3 | 12.2 | 5.7 |
| 6073020209 | 19.71 | 37.62 | 35-40% | 4748 | San Diego | 16.1 | 67.1 | 16.8 | 52.2 | 34.8 | 3.8 | 0.5 | 6.5 | 2.1 |

| | | | | | | | | | | | | | | |
|---|---|---|---|---|---|---|---|---|---|---|---|---|---|---|
| 6037430803 | 19.71 | 37.61 | 35-40% | 5439 | Los Angeles | 9.7 | 72.4 | 17.9 | 9.8 | 25.4 | 0.5 | 0.4 | 62.3 | 1.7 |
| 6001424001 | 19.71 | 37.60 | 35-40% | 3716 | Alameda | 10.7 | 82.8 | 6.5 | 20.2 | 33.8 | 31.3 | 0.3 | 8.7 | 5.7 |
| 6065042005 | 19.71 | 37.58 | 35-40% | 5102 | Riverside | 13.6 | 76.6 | 9.8 | 25.3 | 53.9 | 6.6 | 0.3 | 11.5 | 2.4 |
| 6097154000 | 19.71 | 37.57 | 35-40% | 2597 | Sonoma | 7.8 | 71.1 | 21.1 | 18.1 | 78.3 | 0.4 | 0.4 | 1.1 | 1.7 |
| 6073008350 | 19.69 | 37.56 | 35-40% | 6493 | San Diego | 11.9 | 80.4 | 7.7 | 10.2 | 24.7 | 3.7 | 0.2 | 56.9 | 4.3 |
| 6065042742 | 19.69 | 37.55 | 35-40% | 4232 | Riverside | 18.9 | 76 | 5.1 | 35.2 | 51 | 3.7 | 0.3 | 5.5 | 4.4 |
| 6059042107 | 19.68 | 37.53 | 35-40% | 4254 | Orange | 16.2 | 78.4 | 5.4 | 47.4 | 47.3 | 0.5 | 0.3 | 2.4 | 2.1 |
| 6073012900 | 19.67 | 37.52 | 35-40% | 3374 | San Diego | 10.9 | 74.1 | 15 | 55.8 | 37 | 1.7 | 0.3 | 3.2 | 2 |
| 6027000200 | 19.67 | 37.51 | 35-40% | 1718 | Inyo | 6.6 | 75.2 | 18.2 | 10.5 | 81.4 | 2.7 | 2.4 | 1 | 1.9 |
| 6097153801 | 19.67 | 37.50 | 35-40% | 9648 | Sonoma | 16.6 | 76.2 | 7.2 | 35.9 | 55.9 | 0.7 | 1.2 | 3.4 | 2.9 |
| 6013370000 | 19.67 | 37.48 | 35-40% | 2837 | Contra Costa | 11.1 | 74 | 14.9 | 19.2 | 43.2 | 14.5 | 0.3 | 18.2 | 4.6 |
| 6073020307 | 19.66 | 37.47 | 35-40% | 7170 | San Diego | 12 | 73.8 | 14.2 | 28.1 | 59.3 | 2.1 | 0.4 | 7.4 | 2.7 |
| 6095250200 | 19.66 | 37.46 | 35-40% | 4000 | Solano | 15.1 | 71.4 | 13.5 | 22.3 | 35.7 | 18.2 | 0.8 | 17.2 | 5.7 |
| 6007001800 | 19.66 | 37.44 | 35-40% | 5640 | Butte | 9.6 | 64.7 | 25.7 | 6.6 | 88.3 | 0.4 | 0.9 | 1.3 | 2.4 |
| 6111008306 | 19.65 | 37.43 | 35-40% | 3714 | Ventura | 11.3 | 80.9 | 7.8 | 20.5 | 58.4 | 2 | 0.3 | 16.3 | 2.5 |
| 6073004200 | 19.65 | 37.42 | 35-40% | 5673 | San Diego | 11.1 | 77.2 | 11.7 | 26.5 | 62.6 | 3.4 | 0.2 | 3.9 | 3.3 |
| 6083000801 | 19.65 | 37.41 | 35-40% | 4059 | Santa Barbara | 14.4 | 78.2 | 7.4 | 75.4 | 19.4 | 1.7 | 0.5 | 1.9 | 1 |
| 6029002806 | 19.64 | 37.39 | 35-40% | 2176 | Kern | 7.9 | 82.9 | 9.2 | 18.6 | 56.2 | 7.4 | 0.4 | 14.4 | 3 |
| 6059110117 | 19.64 | 37.38 | 35-40% | 5920 | Orange | 11.3 | 76.6 | 12.1 | 16.3 | 43.3 | 4.2 | 0.2 | 33.1 | 2.9 |
| 6073001700 | 19.63 | 37.37 | 35-40% | 4772 | San Diego | 11.4 | 83.6 | 5 | 42.3 | 38.6 | 10.1 | 0.8 | 4.8 | 3.4 |
| 6037108202 | 19.63 | 37.36 | 35-40% | 4895 | Los Angeles | 14.9 | 72.7 | 12.4 | 10.7 | 40.2 | 4 | 0.2 | 41.5 | 3.5 |
| 6065042743 | 19.63 | 37.34 | 35-40% | 1907 | Riverside | 16.9 | 76.5 | 6.6 | 32.7 | 53.1 | 3.3 | 0.8 | 7.7 | 2.5 |
| 6037920326 | 19.62 | 37.33 | 35-40% | 6840 | Los Angeles | 14.3 | 78 | 7.7 | 18.6 | 51.8 | 4 | 0.4 | 21.8 | 3.4 |
| 6001430800 | 19.62 | 37.32 | 35-40% | 5394 | Alameda | 11.1 | 76 | 12.9 | 18.7 | 55.8 | 3.1 | 0.3 | 18.2 | 3.9 |
| 6081607500 | 19.61 | 37.31 | 35-40% | 3636 | San Mateo | 14.2 | 76.3 | 9.5 | 22.4 | 44.2 | 2.4 | 0 | 26.6 | 4.4 |
| 6065044915 | 19.61 | 37.29 | 35-40% | 6489 | Riverside | 20.4 | 73 | 6.6 | 85.1 | 8.6 | 2 | 0.3 | 3.2 | 0.8 |
| 6037131200 | 19.60 | 37.28 | 35-40% | 3429 | Los Angeles | 11.7 | 76.3 | 12 | 36.3 | 43.7 | 3.4 | 0.3 | 12.1 | 4.1 |
| 6073018510 | 19.58 | 37.27 | 35-40% | 2975 | San Diego | 13.9 | 75.3 | 10.8 | 47.9 | 36.4 | 4.1 | 0.1 | 8.1 | 3.5 |
| 6001441601 | 19.56 | 37.26 | 35-40% | 4561 | Alameda | 12.6 | 73.6 | 13.8 | 24.1 | 34.9 | 4 | 0.2 | 31.7 | 5.1 |
| 6079010102 | 19.56 | 37.24 | 35-40% | 6989 | San Luis Obispo | 17.8 | 74.3 | 7.9 | 51.9 | 42 | 2.3 | 0.6 | 1.3 | 1.9 |
| 6001427700 | 19.56 | 37.23 | 35-40% | 4866 | Alameda | 9.5 | 79 | 11.5 | 11.9 | 45.6 | 6.7 | 0.4 | 30 | 5.5 |
| 6085503108 | 19.56 | 37.22 | 35-40% | 7894 | Santa Clara | 18.8 | 74 | 7.2 | 33.1 | 27.9 | 5.4 | 0.2 | 29.5 | 3.8 |
| 6075016200 | 19.56 | 37.21 | 35-40% | 2541 | San Francisco | 3.2 | 86.7 | 10.1 | 13.3 | 60.3 | 6.7 | 0.4 | 15.5 | 3.8 |
| 6073018518 | 19.56 | 37.19 | 35-40% | 3175 | San Diego | 14.4 | 77.6 | 8 | 61.1 | 26.4 | 2.9 | 0.5 | 6.1 | 3 |
| 6037408723 | 19.56 | 37.18 | 35-40% | 2825 | Los Angeles | 9.6 | 78.8 | 11.6 | 31.3 | 11.4 | 0.9 | 0.1 | 54.8 | 1.5 |
| 6059099502 | 19.56 | 37.17 | 35-40% | 598 | Orange | 24.2 | 73.6 | 2.2 | 24.7 | 46.8 | 12.7 | 0 | 8.2 | 7.5 |
| 6033000900 | 19.54 | 37.15 | 35-40% | 6059 | Lake | 10.5 | 70 | 19.5 | 13.3 | 79.8 | 1.6 | 1.4 | 1.3 | 2.6 |
| 6059063301 | 19.54 | 37.14 | 35-40% | 2941 | Orange | 8.1 | 86.2 | 5.7 | 13.6 | 77.5 | 0.9 | 0.3 | 4.4 | 3.3 |
| 6065042004 | 19.54 | 37.13 | 35-40% | 3165 | Riverside | 8.7 | 75.5 | 15.8 | 23.9 | 63.1 | 5.3 | 0.4 | 4.8 | 2.5 |
| 6095251903 | 19.54 | 37.12 | 35-40% | 5308 | Solano | 13.2 | 76.1 | 10.7 | 26 | 6.6 | 37.8 | 0 | 25 | 4.7 |
| 6071010421 | 19.53 | 37.10 | 35-40% | 6057 | San Bernardino | 19.1 | 74.3 | 6.6 | 24.4 | 55.3 | 8.9 | 0.8 | 5.5 | 5.1 |
| 6043000101 | 19.53 | 37.09 | 35-40% | 3929 | Mariposa | 10.1 | 65.9 | 24 | 10.8 | 81.3 | 0.9 | 3 | 1.2 | 2.7 |
| 6111005906 | 19.50 | 37.08 | 35-40% | 6695 | Ventura | 11.7 | 71.9 | 16.4 | 9.9 | 75.9 | 1.3 | 0.1 | 9.4 | 3.4 |
| 6085504411 | 19.50 | 37.07 | 35-40% | 5450 | Santa Clara | 13 | 75.6 | 11.4 | 18.2 | 19.4 | 1.5 | 0.3 | 57.7 | 2.9 |
| 6037265202 | 19.50 | 37.05 | 35-40% | 3611 | Los Angeles | 6.1 | 73.1 | 20.8 | 5.4 | 68.7 | 1.3 | 0.1 | 19.9 | 4.6 |
| 6007000501 | 19.50 | 37.04 | 35-40% | 4333 | Butte | 8 | 82.3 | 9.7 | 15.3 | 75.8 | 1.8 | 0.5 | 3.2 | 3.4 |
| 6037910716 | 19.50 | 37.03 | 35-40% | 6117 | Los Angeles | 15.2 | 78.9 | 5.9 | 53.4 | 24.6 | 15.5 | 0.3 | 3.6 | 2.6 |
| 6013302010 | 19.49 | 37.02 | 35-40% | 10039 | Contra Costa | 14.6 | 78.8 | 6.6 | 28.3 | 56.4 | 4.7 | 0.3 | 6.2 | 4 |
| 6037108103 | 19.48 | 37.00 | 35-40% | 3256 | Los Angeles | 8.2 | 75.6 | 16.2 | 8.9 | 56.8 | 1.5 | 0 | 29.9 | 2.9 |
| 6071010413 | 19.48 | 36.99 | 35-40% | 5979 | San Bernardino | 12.3 | 66.9 | 20.8 | 19.8 | 71.9 | 2.7 | 0.8 | 1.8 | 3 |
| 6065044907 | 19.48 | 36.98 | 35-40% | 4989 | Riverside | 20.5 | 75.9 | 3.6 | 87.3 | 7.8 | 1.9 | 0.1 | 1.8 | 1 |
| 6037463400 | 19.47 | 36.97 | 35-40% | 5752 | Los Angeles | 9.3 | 77.7 | 13 | 21.7 | 45.6 | 6.3 | 0.2 | 22.1 | 4 |
| 6019005516 | 19.47 | 36.95 | 35-40% | 5527 | Fresno | 9.9 | 77.2 | 12.9 | 18.7 | 63.6 | 2.8 | 0.3 | 11.3 | 3.3 |
| 6013359203 | 19.47 | 36.94 | 35-40% | 6726 | Contra Costa | 10.6 | 75.7 | 13.7 | 18.2 | 17.8 | 19.6 | 0.3 | 39.4 | 4.7 |
| 6027000400 | 19.47 | 36.93 | 35-40% | 5668 | Inyo | 14.3 | 71.9 | 13.8 | 26.7 | 49.9 | 0.4 | 19.1 | 1.3 | 2.5 |
| 6037265520 | 19.46 | 36.92 | 35-40% | 4561 | Los Angeles | 7.9 | 77 | 15.1 | 5.7 | 69.3 | 2.1 | 0.2 | 18 | 4.8 |
| 6085504806 | 19.46 | 36.90 | 35-40% | 2930 | Santa Clara | 12.8 | 74.8 | 12.4 | 36.9 | 17.7 | 2.1 | 0.2 | 40.1 | 2.9 |
| 6073014901 | 19.45 | 36.89 | 35-40% | 4243 | San Diego | 12 | 74.7 | 13.3 | 18.2 | 63.4 | 8.4 | 0.5 | 4.4 | 5.1 |
| 6037271702 | 19.45 | 36.88 | 35-40% | 4134 | Los Angeles | 13.3 | 77 | 9.7 | 13.8 | 41 | 4.2 | 0.1 | 36.9 | 4 |
| 6037408503 | 19.43 | 36.86 | 35-40% | 6317 | Los Angeles | 9.4 | 72.1 | 18.5 | 36.2 | 21.7 | 1.5 | 0 | 39.5 | 1.1 |
| 6037910810 | 19.43 | 36.85 | 35-40% | 2765 | Los Angeles | 12.1 | 81.8 | 6.1 | 24.1 | 61.9 | 2.6 | 0.3 | 8.7 | 2.4 |
| 6013331000 | 19.41 | 36.84 | 35-40% | 7013 | Contra Costa | 11.5 | 76.8 | 11.7 | 23.7 | 57.7 | 2.8 | 0.3 | 11.7 | 3.8 |
| 6001451504 | 19.39 | 36.83 | 35-40% | 1509 | Alameda | 11.8 | 80.8 | 7.4 | 17 | 67.3 | 2.4 | 0.1 | 8.7 | 4.4 |
| 6083002606 | 19.38 | 36.81 | 35-40% | 3344 | Santa Barbara | 27.7 | 72.1 | 0.2 | 18.6 | 60 | 8.5 | 0.2 | 6.5 | 6.2 |
| 6073014002 | 19.38 | 36.80 | 35-40% | 4488 | San Diego | 14.6 | 74.7 | 10.7 | 39.9 | 32.9 | 12.6 | 0.5 | 9.8 | 4.4 |
| 6001450603 | 19.38 | 36.79 | 35-40% | 4657 | Alameda | 14.5 | 75.1 | 10.4 | 11.1 | 64.1 | 1.2 | 0.3 | 19 | 4.3 |

| | | | | | | | | | | | | | | |
|---|---|---|---|---|---|---|---|---|---|---|---|---|---|---|
| 6111007800 | 19.38 | 36.78 | 35-40% | 4119 | Ventura | 15.6 | 76.4 | 8 | 38.8 | 41.8 | 1.7 | 0.1 | 13.8 | 3.7 |
| 6037277000 | 19.37 | 36.76 | 35-40% | 5395 | Los Angeles | 11.3 | 71.1 | 17.6 | 14 | 66.2 | 3.3 | 0.2 | 11.7 | 4.7 |
| 6001450602 | 19.37 | 36.75 | 35-40% | 8722 | Alameda | 11.8 | 77 | 11.2 | 9 | 60.1 | 1.7 | 0.2 | 24.8 | 4.1 |
| 6059099417 | 19.37 | 36.74 | 35-40% | 4031 | Orange | 8.4 | 78.3 | 13.3 | 11.2 | 75.1 | 0.7 | 0.3 | 10.1 | 2.6 |
| 6085504413 | 19.36 | 36.73 | 35-40% | 1714 | Santa Clara | 14.8 | 67.6 | 17.6 | 4 | 13.9 | 1.6 | 0.1 | 77.5 | 2.9 |
| 6037300200 | 19.36 | 36.71 | 35-40% | 5546 | Los Angeles | 10.3 | 76.4 | 13.3 | 8.9 | 54.1 | 0.6 | 0.2 | 33.6 | 2.6 |
| 6085508504 | 19.35 | 36.70 | 35-40% | 7701 | Santa Clara | 15.1 | 76.9 | 8 | 18.7 | 20.8 | 2.3 | 0.2 | 55.7 | 2.2 |
| 6059052524 | 19.35 | 36.69 | 35-40% | 7952 | Orange | 14.7 | 78.1 | 7.2 | 21.1 | 45.2 | 2.4 | 0.1 | 26.7 | 4.5 |
| 6073003213 | 19.34 | 36.68 | 35-40% | 4193 | San Diego | 10.8 | 79.1 | 10.1 | 20.8 | 7.8 | 12.3 | 0.1 | 55 | 3.9 |
| 6059099225 | 19.34 | 36.66 | 35-40% | 3348 | Orange | 9.7 | 72.3 | 18 | 8.3 | 45.8 | 0.6 | 0.2 | 41 | 3.9 |
| 6059110008 | 19.33 | 36.65 | 35-40% | 4374 | Orange | 10.2 | 72.7 | 17.1 | 12 | 74.1 | 1.2 | 0.3 | 8.6 | 3.8 |
| 6075025403 | 19.33 | 36.64 | 35-40% | 4267 | San Francisco | 12.5 | 75.9 | 11.6 | 37.4 | 26.3 | 7.1 | 0.3 | 25.9 | 3 |
| 6059011707 | 19.32 | 36.63 | 35-40% | 6045 | Orange | 11.7 | 76.7 | 11.6 | 17 | 53.1 | 2.3 | 0.1 | 24.9 | 2.6 |
| 6037910707 | 19.31 | 36.61 | 35-40% | 4329 | Los Angeles | 16.5 | 76.2 | 7.3 | 51.3 | 24.6 | 18.1 | 0.4 | 2.3 | 3.3 |
| 6065041912 | 19.31 | 36.60 | 35-40% | 5776 | Riverside | 13.6 | 79.9 | 6.5 | 25 | 47.8 | 3.3 | 0.2 | 20.4 | 3.4 |
| 6037139502 | 19.29 | 36.59 | 35-40% | 3007 | Los Angeles | 12.1 | 69 | 18.9 | 8.6 | 77.3 | 1.5 | 0 | 5.3 | 7.3 |
| 6059011715 | 19.29 | 36.57 | 35-40% | 6369 | Orange | 10.7 | 67.9 | 21.4 | 16.7 | 65.3 | 1.1 | 0.3 | 13.7 | 2.8 |
| 6073016702 | 19.29 | 36.56 | 35-40% | 6944 | San Diego | 13.6 | 76 | 10.4 | 21.5 | 70.8 | 1.4 | 1.1 | 1.6 | 3.5 |
| 6053011303 | 19.29 | 36.55 | 35-40% | 3775 | Monterey | 14.6 | 74.2 | 11.2 | 55.2 | 41.7 | 0.8 | 0.2 | 0.6 | 1.5 |
| 6089012000 | 19.28 | 36.54 | 35-40% | 4648 | Shasta | 15.5 | 74.4 | 10.1 | 12.2 | 75.2 | 0.7 | 4.3 | 3.3 | 4.2 |
| 6037920013 | 19.28 | 36.52 | 35-40% | 4306 | Los Angeles | 10.1 | 70.3 | 19.6 | 23.6 | 64.9 | 1.6 | 0.3 | 7.1 | 2.4 |
| 6037700901 | 19.27 | 36.51 | 35-40% | 3856 | Los Angeles | 10.4 | 76.1 | 13.5 | 6.7 | 72.4 | 2.3 | 0 | 13.2 | 5.4 |
| 6073018611 | 19.26 | 36.50 | 35-40% | 8052 | San Diego | 16.1 | 73.8 | 10.1 | 35.5 | 44 | 3.5 | 0.2 | 12.9 | 3.9 |
| 6017031200 | 19.26 | 36.49 | 35-40% | 5193 | El Dorado | 9.5 | 69.7 | 20.8 | 12.7 | 80.7 | 1 | 1.3 | 1.5 | 2.8 |
| 6113010602 | 19.26 | 36.47 | 35-40% | 5615 | Yolo | 5.5 | 86 | 8.5 | 17 | 55.5 | 2.5 | 0.5 | 19.9 | 4.6 |
| 6073015601 | 19.25 | 36.46 | 35-40% | 5937 | San Diego | 13.6 | 76.6 | 9.8 | 25.7 | 63.7 | 3.8 | 0.5 | 2.3 | 4 |
| 6037571000 | 19.25 | 36.45 | 35-40% | 5747 | Los Angeles | 12.1 | 75.6 | 12.3 | 23.8 | 61.6 | 2.5 | 0.2 | 8.2 | 3.6 |
| 6087123300 | 19.25 | 36.44 | 35-40% | 1741 | Santa Cruz | 15.2 | 75.3 | 9.5 | 60.3 | 36.2 | 0.3 | 0.1 | 1.2 | 1.8 |
| 6071008800 | 19.24 | 36.42 | 35-40% | 6382 | San Bernardino | 15.1 | 75.6 | 9.3 | 32.5 | 62.8 | 0.9 | 0.5 | 1.1 | 2.2 |
| 6085505700 | 19.24 | 36.41 | 35-40% | 5751 | Santa Clara | 11 | 81.1 | 7.9 | 24.3 | 52.8 | 3 | 0.3 | 15.9 | 3.7 |
| 6095252706 | 19.24 | 36.40 | 35-40% | 3844 | Solano | 16.8 | 77.3 | 5.9 | 22.5 | 30.1 | 16.4 | 0.4 | 23.9 | 6.7 |
| 6037141400 | 19.22 | 36.39 | 35-40% | 4412 | Los Angeles | 11.1 | 68.8 | 20.1 | 9.3 | 78.4 | 3.4 | 0.1 | 5.8 | 3 |
| 6073014601 | 19.22 | 36.37 | 35-40% | 4795 | San Diego | 12.4 | 73.3 | 14.3 | 26.4 | 53 | 10.9 | 0.5 | 5 | 4.3 |
| 6095252312 | 19.21 | 36.36 | 35-40% | 3368 | Solano | 10.4 | 74.9 | 14.7 | 19.1 | 48.2 | 12.6 | 0.5 | 13.4 | 6.3 |
| 6111002901 | 19.21 | 36.35 | 35-40% | 5455 | Ventura | 12.6 | 72.8 | 14.6 | 46.8 | 35.7 | 3.8 | 0.2 | 11.1 | 2.4 |
| 6071010021 | 19.20 | 36.33 | 35-40% | 6437 | San Bernardino | 13.9 | 72.5 | 13.6 | 37.3 | 55.8 | 3.3 | 0.4 | 1.4 | 1.9 |
| 6067004010 | 19.20 | 36.32 | 35-40% | 5131 | Sacramento | 11.4 | 72.5 | 16.1 | 18.5 | 31.7 | 17.3 | 0.6 | 26.4 | 5.6 |
| 6075011800 | 19.20 | 36.31 | 35-40% | 1500 | San Francisco | 5.9 | 69.4 | 24.7 | 2.5 | 7.5 | 0.8 | 0.1 | 88.3 | 0.8 |
| 6037554518 | 19.19 | 36.30 | 35-40% | 5435 | Los Angeles | 9.5 | 74.9 | 15.6 | 9.1 | 16.5 | 6.2 | 0.1 | 65.3 | 2.7 |
| 6085505305 | 19.19 | 36.28 | 35-40% | 5514 | Santa Clara | 12.8 | 73.9 | 13.3 | 18.1 | 39 | 2 | 0.2 | 36.8 | 3.9 |
| 6001450101 | 19.17 | 36.27 | 35-40% | 4349 | Alameda | 15.8 | 80.5 | 3.7 | 10.1 | 38.5 | 6.4 | 0.2 | 38.9 | 5.9 |
| 6073001300 | 19.16 | 36.26 | 35-40% | 6197 | San Diego | 7.6 | 85.9 | 6.5 | 31.1 | 43.7 | 12.3 | 0.3 | 8 | 4.5 |
| 6067007013 | 19.16 | 36.25 | 35-40% | 2779 | Sacramento | 14.8 | 78.9 | 6.3 | 37.9 | 26.8 | 15.4 | 0.5 | 13.3 | 6.2 |
| 6037137401 | 19.16 | 36.23 | 35-40% | 4157 | Los Angeles | 13.3 | 72.8 | 13.9 | 9.9 | 77.2 | 2.7 | 0.2 | 5.5 | 4.5 |
| 6067007428 | 19.15 | 36.22 | 35-40% | 3451 | Sacramento | 14 | 78.4 | 7.6 | 15.4 | 66.1 | 5.7 | 0.4 | 7.3 | 5.1 |
| 6001403600 | 19.15 | 36.21 | 35-40% | 4482 | Alameda | 7.7 | 83.7 | 8.6 | 9.7 | 34.4 | 37.9 | 0.2 | 12.3 | 5.5 |
| 6059110007 | 19.15 | 36.20 | 35-40% | 4799 | Orange | 10.4 | 72.2 | 17.4 | 11.3 | 77.3 | 0.4 | 0.3 | 7.8 | 3 |
| 6001431100 | 19.14 | 36.18 | 35-40% | 3225 | Alameda | 14.1 | 75.8 | 10.1 | 27.8 | 40.4 | 13.8 | 0.2 | 12.7 | 5.1 |
| 6019004214 | 19.14 | 36.17 | 35-40% | 4978 | Fresno | 10.6 | 71.5 | 17.9 | 21.1 | 66.3 | 3.6 | 0.3 | 5.8 | 2.9 |
| 6019006403 | 19.14 | 36.16 | 35-40% | 6304 | Fresno | 11 | 72.9 | 16.1 | 16.1 | 77 | 1.1 | 1.8 | 1.4 | 2.7 |
| 6071000108 | 19.14 | 36.15 | 35-40% | 5077 | San Bernardino | 12.8 | 82.1 | 5.1 | 25.7 | 42.4 | 5.4 | 0.1 | 23.3 | 3.1 |
| 6095252313 | 19.13 | 36.13 | 35-40% | 5065 | Solano | 10.3 | 65.4 | 24.3 | 15.1 | 45.2 | 15.8 | 0.6 | 16.7 | 6.6 |
| 6007003501 | 19.13 | 36.12 | 35-40% | 3222 | Butte | 14.9 | 70.6 | 14.5 | 29.1 | 62.9 | 0.7 | 0.7 | 3.7 | 2.9 |
| 6059074107 | 19.13 | 36.11 | 35-40% | 5512 | Orange | 11.2 | 80.5 | 8.3 | 35.9 | 37 | 1.9 | 0.1 | 22.4 | 2.6 |
| 6001423000 | 19.13 | 36.10 | 35-40% | 4396 | Alameda | 7.7 | 80.4 | 11.9 | 10.2 | 60.4 | 7.5 | 0.3 | 16.1 | 5.6 |
| 6037901102 | 19.12 | 36.08 | 35-40% | 5557 | Los Angeles | 12.7 | 78.3 | 9 | 26.3 | 57.2 | 9 | 0.7 | 3.7 | 3.1 |
| 6073015100 | 19.12 | 36.07 | 35-40% | 4769 | San Diego | 11.4 | 73.7 | 14.9 | 17.3 | 70.5 | 3.7 | 0.3 | 4.5 | 3.7 |
| 6059011402 | 19.11 | 36.06 | 35-40% | 2325 | Orange | 12.2 | 68.9 | 18.9 | 19.7 | 67.7 | 0.9 | 0.1 | 8.7 | 2.9 |
| 6065042716 | 19.11 | 36.04 | 35-40% | 5033 | Riverside | 11.3 | 73.9 | 14.8 | 16.8 | 77.5 | 1.5 | 0.1 | 1.8 | 2.2 |
| 6073019503 | 19.10 | 36.03 | 35-40% | 4795 | San Diego | 16.5 | 79.3 | 4.2 | 57.5 | 32.2 | 3.4 | 0.4 | 4.1 | 2.4 |
| 6073003103 | 19.10 | 36.02 | 35-40% | 6256 | San Diego | 13.4 | 75.7 | 10.9 | 42.7 | 8 | 34.1 | 0.1 | 12.1 | 3 |
| 6037274202 | 19.10 | 36.01 | 35-40% | 4337 | Los Angeles | 5.9 | 74 | 20.1 | 6.3 | 82.1 | 3.5 | 0.1 | 5 | 3 |
| 6097153901 | 19.08 | 35.99 | 35-40% | 5421 | Sonoma | 10.3 | 72.6 | 17.1 | 25.8 | 68.4 | 0.8 | 0.6 | 2.3 | 2.1 |
| 6037700300 | 19.08 | 35.98 | 35-40% | 5623 | Los Angeles | 2.5 | 84.3 | 13.2 | 9.3 | 79.7 | 2.9 | 0.1 | 5 | 2.9 |
| 6037137502 | 19.07 | 35.97 | 35-40% | 4202 | Los Angeles | 11.6 | 70.2 | 18.2 | 9.9 | 75.2 | 4.2 | 0.2 | 5.7 | 4.8 |
| 6059099604 | 19.07 | 35.96 | 35-40% | 3606 | Orange | 11.4 | 74.4 | 14.2 | 14.1 | 69.3 | 0.4 | 0.5 | 12.4 | 3.3 |

| | | | | | | | | | | | | | | | |
|---|---|---|---|---|---|---|---|---|---|---|---|---|---|---|---|
| 6033000702 | 19.07 | 35.94 | 35-40% | 4029 | Lake | 13.5 | 72 | 14.5 | 23 | 64.7 | 4.2 | 2 | 0.8 | 5.2 |
| 6037101300 | 19.06 | 35.93 | 35-40% | 4199 | Los Angeles | 8.8 | 73.3 | 17.9 | 12 | 76 | 1 | 0.1 | 7.6 | 3.3 |
| 6071009717 | 19.05 | 35.92 | 35-40% | 4018 | San Bernardino | 12.4 | 73.3 | 14.3 | 24.7 | 63.2 | 5.9 | 0.2 | 2.9 | 3.1 |
| 6083002205 | 19.04 | 35.91 | 35-40% | 4997 | Santa Barbara | 19.1 | 69.6 | 11.3 | 70.3 | 21.5 | 1.4 | 0.2 | 4.6 | 2 |
| 6037431700 | 19.04 | 35.89 | 35-40% | 6433 | Los Angeles | 9 | 72.3 | 18.7 | 5.2 | 20.6 | 0.6 | 0 | 72 | 1.6 |
| 6001435200 | 19.04 | 35.88 | 35-40% | 4140 | Alameda | 11 | 77.7 | 11.3 | 22 | 29.9 | 25.2 | 0.2 | 16.6 | 6.1 |
| 6113011001 | 19.03 | 35.87 | 35-40% | 6464 | Yolo | 16.3 | 71.5 | 12.2 | 50.7 | 40.9 | 1.7 | 0.7 | 3.9 | 2.1 |
| 6001436000 | 19.02 | 35.86 | 35-40% | 4557 | Alameda | 12.9 | 74.7 | 12.4 | 40.1 | 36.9 | 3 | 0.4 | 16.5 | 3.2 |
| 6037300600 | 19.02 | 35.84 | 35-40% | 8053 | Los Angeles | 10.8 | 73.6 | 15.6 | 11.7 | 59.9 | 0.7 | 0.2 | 24.3 | 3.2 |
| 6073002301 | 19.01 | 35.83 | 35-40% | 2821 | San Diego | 14.3 | 78.6 | 7.1 | 37.3 | 20.8 | 12.7 | 0.2 | 25.3 | 3.7 |
| 6037135202 | 19.01 | 35.82 | 35-40% | 4255 | Los Angeles | 10.9 | 73.4 | 15.7 | 15.5 | 67.1 | 2.8 | 0.2 | 10.9 | 3.5 |
| 6085512032 | 19.01 | 35.81 | 35-40% | 3389 | Santa Clara | 14.8 | 76.4 | 8.8 | 34.3 | 41 | 3.3 | 0.5 | 16.5 | 4.5 |
| 6001450743 | 19.01 | 35.79 | 35-40% | 4734 | Alameda | 16.3 | 79.4 | 4.3 | 15.3 | 31.1 | 3.3 | 0.3 | 46 | 4 |
| 6085505304 | 19.00 | 35.78 | 35-40% | 3265 | Santa Clara | 11.8 | 74.4 | 13.8 | 20.9 | 39.5 | 1 | 0.4 | 32.6 | 5.6 |
| 6073009604 | 19.00 | 35.77 | 35-40% | 3179 | San Diego | 11 | 73 | 16 | 19 | 66.8 | 3.3 | 0.6 | 6.2 | 4.1 |
| 6071000118 | 18.99 | 35.75 | 35-40% | 4541 | San Bernardino | 10.7 | 80.9 | 8.4 | 20.5 | 25 | 3 | 0.2 | 48.5 | 2.8 |
| 6067008127 | 18.99 | 35.74 | 35-40% | 4792 | Sacramento | 14.6 | 77.8 | 7.6 | 19.5 | 68.3 | 2.9 | 0.8 | 4.5 | 4.1 |
| 6075016000 | 18.99 | 35.73 | 35-40% | 2465 | San Francisco | 2.3 | 74.6 | 23.1 | 9.7 | 49.6 | 4.9 | 0.2 | 31.7 | 4 |
| 6071009713 | 18.99 | 35.72 | 35-40% | 7063 | San Bernardino | 15.6 | 74.3 | 10.1 | 33.1 | 55.4 | 6.1 | 0.5 | 2 | 2.9 |
| 6019004405 | 18.98 | 35.70 | 35-40% | 4040 | Fresno | 9.4 | 77.3 | 13.3 | 16.4 | 68 | 2.5 | 0.3 | 9.8 | 2.9 |
| 6037143603 | 18.98 | 35.69 | 35-40% | 2222 | Los Angeles | 6.5 | 86.2 | 7.3 | 12.5 | 71.7 | 4.9 | 0.3 | 7.1 | 3.6 |
| 6037462400 | 18.96 | 35.68 | 35-40% | 4229 | Los Angeles | 11.9 | 74.1 | 14 | 30.9 | 50.8 | 6.5 | 0.2 | 7.9 | 3.8 |
| 6111004505 | 18.96 | 35.67 | 35-40% | 2150 | Ventura | 17.7 | 74.2 | 8.1 | 81.7 | 8.7 | 2.2 | 0 | 6.5 | 0.9 |
| 6029005501 | 18.96 | 35.65 | 35-40% | 6275 | Kern | 10.4 | 71.2 | 18.4 | 9.5 | 82.2 | 1.5 | 0.9 | 2.8 | 3 |
| 6073018511 | 18.95 | 35.64 | 35-40% | 5003 | San Diego | 15.3 | 77.9 | 6.8 | 43.8 | 42.9 | 4.3 | 0.3 | 5.9 | 2.9 |
| 6023001200 | 18.95 | 35.63 | 35-40% | 4686 | Humboldt | 6.3 | 85.9 | 7.8 | 11.7 | 77.1 | 1.3 | 2 | 2.8 | 5 |
| 6059001102 | 18.94 | 35.62 | 35-40% | 3144 | Orange | 12 | 77 | 11 | 46.2 | 41.3 | 0.7 | 0.6 | 9.2 | 2 |
| 6071009710 | 18.93 | 35.60 | 35-40% | 7120 | San Bernardino | 19.2 | 73.2 | 7.6 | 38.9 | 41 | 12.9 | 0.7 | 2.9 | 3.6 |
| 6067009311 | 18.93 | 35.59 | 35-40% | 6407 | Sacramento | 14.8 | 77.9 | 7.3 | 20.1 | 37.4 | 8.9 | 0.6 | 27.8 | 5.1 |
| 6079010202 | 18.93 | 35.58 | 35-40% | 5491 | San Luis Obispo | 14.5 | 70.7 | 14.8 | 36.9 | 57.2 | 1.7 | 0.4 | 2.1 | 1.8 |
| 6037403320 | 18.92 | 35.57 | 35-40% | 5573 | Los Angeles | 9.2 | 81.3 | 9.5 | 13.4 | 15.9 | 3.7 | 0.1 | 64.2 | 2.7 |
| 6037400900 | 18.92 | 35.55 | 35-40% | 4086 | Los Angeles | 12 | 75.8 | 12.2 | 27.5 | 58.7 | 1.3 | 0.3 | 9.8 | 2.4 |
| 6085512022 | 18.91 | 35.54 | 35-40% | 5374 | Santa Clara | 14.9 | 75.3 | 9.8 | 38 | 25.3 | 4.3 | 0.3 | 29 | 3 |
| 6073007600 | 18.91 | 35.53 | 35-40% | 5607 | San Diego | 3.1 | 85.9 | 11 | 8.2 | 85.3 | 0.9 | 0.3 | 2.6 | 2.6 |
| 6081601605 | 18.91 | 35.52 | 35-40% | 6189 | San Mateo | 9.7 | 74.4 | 15.9 | 9.6 | 9.6 | 2.5 | 0 | 75.1 | 3.1 |
| 6095252911 | 18.91 | 35.50 | 35-40% | 4912 | Solano | 5.2 | 46.6 | 48.2 | 12 | 73.8 | 6.6 | 0.4 | 4.4 | 2.7 |
| 6097151308 | 18.91 | 35.49 | 35-40% | 4796 | Sonoma | 8.4 | 72.3 | 19.3 | 14.5 | 74.8 | 1.5 | 0.5 | 5.4 | 3.3 |
| 6067002300 | 18.89 | 35.48 | 35-40% | 3156 | Sacramento | 10.8 | 76.3 | 12.9 | 10.5 | 75.8 | 1.3 | 0.3 | 7.6 | 4.4 |
| 6067009317 | 18.89 | 35.46 | 35-40% | 5700 | Sacramento | 13.9 | 79.2 | 6.9 | 25.4 | 34.8 | 13.5 | 0.4 | 20.6 | 5.2 |
| 6061021401 | 18.89 | 35.45 | 35-40% | 2569 | Placer | 15.8 | 72.8 | 11.4 | 32.9 | 63.4 | 0.1 | 1.2 | 0.4 | 2 |
| 6013330000 | 18.87 | 35.44 | 35-40% | 5353 | Contra Costa | 11.7 | 76.5 | 11.8 | 28.2 | 55.7 | 2.4 | 0.5 | 9.4 | 3.8 |
| 6067007209 | 18.86 | 35.43 | 35-40% | 3695 | Sacramento | 12.8 | 76.9 | 10.3 | 18 | 73.3 | 1.6 | 1.6 | 2.2 | 3.3 |
| 6065044515 | 18.86 | 35.41 | 35-40% | 3618 | Riverside | 17.6 | 68.6 | 13.8 | 72.8 | 23.3 | 2 | 0.4 | 1 | 0.4 |
| 6073009510 | 18.86 | 35.40 | 35-40% | 5087 | San Diego | 33.5 | 66.1 | 0.4 | 23.2 | 53.8 | 9.3 | 0.6 | 4.9 | 8.2 |
| 6023011000 | 18.85 | 35.39 | 35-40% | 4386 | Humboldt | 12.7 | 68.3 | 19 | 13.3 | 79.9 | 0.3 | 2.2 | 0.8 | 3.5 |
| 6067008130 | 18.85 | 35.38 | 35-40% | 3761 | Sacramento | 12.8 | 75.1 | 12.1 | 15.6 | 69.2 | 5.8 | 0.9 | 4.4 | 4.1 |
| 6085500600 | 18.84 | 35.36 | 35-40% | 4586 | Santa Clara | 11.2 | 80.1 | 8.7 | 27.2 | 50 | 5.8 | 0.3 | 13.3 | 3.3 |
| 6029003812 | 18.84 | 35.35 | 35-40% | 4367 | Kern | 13.7 | 71.1 | 15.2 | 23.2 | 63.9 | 3.1 | 1.1 | 6.2 | 2.4 |
| 6073012304 | 18.84 | 35.34 | 35-40% | 3434 | San Diego | 11.8 | 74.4 | 13.8 | 52.9 | 35.4 | 3 | 0.6 | 5.1 | 3 |
| 6059032061 | 18.84 | 35.33 | 35-40% | 3349 | Orange | 9.1 | 67.7 | 23.2 | 7.5 | 83.8 | 0.8 | 0.2 | 6 | 1.8 |
| 6017031502 | 18.84 | 35.31 | 35-40% | 6031 | El Dorado | 10.1 | 67.7 | 22.2 | 13.2 | 80.7 | 0.4 | 1.6 | 0.9 | 3.3 |
| 6073009511 | 18.84 | 35.30 | 35-40% | 4427 | San Diego | 35.1 | 64.7 | 0.2 | 25.9 | 48.1 | 12.3 | 0.8 | 4.8 | 8.2 |
| 6037139701 | 18.83 | 35.29 | 35-40% | 4920 | Los Angeles | 12.2 | 66.4 | 21.4 | 6.5 | 83.2 | 1.8 | 0.1 | 5.9 | 2.6 |
| 6065043247 | 18.83 | 35.28 | 35-40% | 8838 | Riverside | 16.8 | 78.5 | 4.7 | 28 | 44.7 | 8 | 0.6 | 14.1 | 4.6 |
| 6067009308 | 18.82 | 35.26 | 35-40% | 6032 | Sacramento | 11.3 | 74.7 | 14 | 21.9 | 61.7 | 3.7 | 0.7 | 8.2 | 3.8 |
| 6085506305 | 18.81 | 35.25 | 35-40% | 7191 | Santa Clara | 16 | 75.8 | 8.2 | 40.6 | 29.4 | 6.5 | 0.3 | 20.3 | 3 |
| 6059042313 | 18.81 | 35.24 | 35-40% | 6471 | Orange | 10.3 | 79.3 | 10.4 | 30.8 | 63.8 | 0.7 | 0.4 | 2.3 | 1.9 |
| 6075015900 | 18.80 | 35.23 | 35-40% | 4350 | San Francisco | 4.2 | 75.9 | 19.9 | 8.1 | 36.3 | 12.9 | 0.1 | 38 | 4.6 |
| 6037800504 | 18.80 | 35.21 | 35-40% | 2497 | Los Angeles | 8.2 | 73.5 | 18.3 | 6 | 86.5 | 1.3 | 0.3 | 3.6 | 2.2 |
| 6081610900 | 18.79 | 35.20 | 35-40% | 6932 | San Mateo | 14.6 | 79.4 | 6 | 56.4 | 32.5 | 1.9 | 0.3 | 5.8 | 3 |
| 6059099305 | 18.79 | 35.19 | 35-40% | 7143 | Orange | 10.7 | 83.5 | 5.8 | 25.3 | 63.4 | 1 | 0.3 | 6.6 | 3.4 |
| 6009000220 | 18.78 | 35.17 | 35-40% | 5515 | Calaveras | 11.2 | 75 | 13.8 | 12.2 | 80.5 | 0.9 | 1.5 | 1.8 | 3.1 |
| 6037910505 | 18.78 | 35.16 | 35-40% | 3064 | Los Angeles | 17.4 | 77.4 | 5.2 | 66.1 | 18.6 | 10.5 | 0.5 | 2.1 | 2.2 |
| 6037265303 | 18.77 | 35.15 | 35-40% | 4523 | Los Angeles | 0.8 | 98.1 | 1.1 | 13.6 | 39.6 | 2.2 | 0.1 | 39.2 | 5.3 |
| 6079012200 | 18.77 | 35.14 | 35-40% | 7024 | San Luis Obispo | 13.3 | 74.8 | 11.9 | 49.1 | 46.2 | 0.4 | 0.5 | 2 | 1.8 |
| 6037273700 | 18.77 | 35.12 | 35-40% | 2801 | Los Angeles | 10.7 | 78.7 | 10.6 | 23.6 | 65.9 | 1.7 | 0.3 | 4.6 | 3.9 |

| | | | | | | | | | | | | | | |
|---|---|---|---|---|---|---|---|---|---|---|---|---|---|---|
| 6059062800 | 18.76 | 35.11 | 35-40% | 4220 | Orange | 5.5 | 73.6 | 20.9 | 6.4 | 88.6 | 0.8 | 0.3 | 2.2 | 1.7 |
| 6037267402 | 18.75 | 35.10 | 35-40% | 4580 | Los Angeles | 4.9 | 81.9 | 13.2 | 13.4 | 64.4 | 2.9 | 0.2 | 14.5 | 4.6 |
| 6111007901 | 18.75 | 35.09 | 35-40% | 5401 | Ventura | 14.3 | 79 | 6.7 | 39 | 47.2 | 0.9 | 0.3 | 9.4 | 3.2 |
| 6073017502 | 18.74 | 35.07 | 35-40% | 3641 | San Diego | 13.7 | 73.4 | 12.9 | 34.7 | 58.6 | 0.7 | 0.2 | 3.1 | 2.7 |
| 6073017900 | 18.74 | 35.06 | 35-40% | 6958 | San Diego | 10.8 | 74.2 | 15 | 36.1 | 56.9 | 0.9 | 0.4 | 3.2 | 2.4 |
| 6085509404 | 18.74 | 35.05 | 35-40% | 6076 | Santa Clara | 13 | 78.5 | 8.5 | 31.6 | 32.6 | 1.6 | 0.1 | 31 | 3.1 |
| 6059110102 | 18.72 | 35.04 | 35-40% | 5780 | Orange | 9.5 | 76 | 14.5 | 17.9 | 32.5 | 3.3 | 0.2 | 42.9 | 3.2 |
| 6093000400 | 18.71 | 35.02 | 35-40% | 652 | Siskiyou | 6.9 | 68.1 | 25 | 5.5 | 83.4 | 0 | 4.3 | 0.5 | 6.3 |
| 6111002600 | 18.71 | 35.01 | 35-40% | 3211 | Ventura | 11.8 | 80.3 | 7.9 | 31.2 | 61.6 | 1 | 0.8 | 2.1 | 3.3 |
| 6001441927 | 18.70 | 35.00 | 30-35% | 4103 | Alameda | 14.3 | 74.6 | 11.1 | 11.8 | 20.4 | 5.5 | 0.1 | 57.6 | 4.6 |
| 6085512505 | 18.68 | 34.99 | 30-35% | 7295 | Santa Clara | 18.1 | 76 | 5.9 | 61.4 | 26.1 | 1.5 | 0.5 | 8 | 2.5 |
| 6111006900 | 18.68 | 34.97 | 30-35% | 3520 | Ventura | 10.1 | 65.3 | 24.6 | 21.3 | 65.7 | 1.3 | 0.5 | 8.9 | 2.3 |
| 6037571101 | 18.67 | 34.96 | 30-35% | 4574 | Los Angeles | 12.2 | 77.1 | 10.7 | 26.8 | 56.9 | 3.8 | 0.2 | 8.7 | 3.6 |
| 6059099233 | 18.67 | 34.95 | 30-35% | 3419 | Orange | 10.1 | 72.8 | 17.1 | 10.6 | 53.6 | 0.6 | 0.4 | 30.9 | 3.9 |
| 6037403403 | 18.67 | 34.94 | 30-35% | 5140 | Los Angeles | 7.2 | 81.2 | 11.6 | 13.8 | 10.6 | 2.4 | 0 | 71.3 | 1.9 |
| 6013303202 | 18.67 | 34.92 | 30-35% | 7080 | Contra Costa | 16.3 | 77.6 | 6.1 | 24.1 | 59 | 5.8 | 0.4 | 5.8 | 4.8 |
| 6061021802 | 18.67 | 34.91 | 30-35% | 5676 | Placer | 9.4 | 67.5 | 23.1 | 10.9 | 82.7 | 0.6 | 0.8 | 1.7 | 3.3 |
| 6077004307 | 18.67 | 34.90 | 30-35% | 3753 | San Joaquin | 13.6 | 73.7 | 12.7 | 32 | 58.1 | 0.8 | 0.5 | 6.5 | 2.1 |
| 6013363000 | 18.65 | 34.88 | 30-35% | 7043 | Contra Costa | 11.2 | 77.3 | 11.5 | 23.8 | 32.1 | 21.3 | 0.3 | 17.2 | 5.3 |
| 6071010023 | 18.65 | 34.87 | 30-35% | 5949 | San Bernardino | 15.2 | 77.3 | 7.5 | 44.8 | 48.8 | 2.4 | 0.6 | 1.1 | 2.2 |
| 6071009107 | 18.65 | 34.86 | 30-35% | 7272 | San Bernardino | 11.9 | 75.5 | 12.6 | 23.9 | 70.3 | 0.7 | 0.4 | 2.6 | 2 |
| 6083002304 | 18.64 | 34.85 | 30-35% | 6687 | Santa Barbara | 22.6 | 72 | 5.4 | 89.9 | 5.6 | 0.8 | 0.3 | 2.9 | 0.6 |
| 6075031302 | 18.64 | 34.83 | 30-35% | 5495 | San Francisco | 8.8 | 79.6 | 11.6 | 12.8 | 14 | 15.2 | 0.3 | 54.4 | 3.3 |
| 6113010312 | 18.64 | 34.82 | 30-35% | 5130 | Yolo | 13.9 | 77.8 | 8.3 | 19.4 | 62.2 | 2.7 | 0.3 | 10.2 | 5.2 |
| 6113011300 | 18.64 | 34.81 | 30-35% | 8106 | Yolo | 13.4 | 77 | 9.6 | 51.6 | 44.2 | 0.7 | 0.5 | 0.9 | 2.1 |
| 6059099602 | 18.63 | 34.80 | 30-35% | 3196 | Orange | 12.8 | 76.5 | 10.7 | 21.8 | 55.9 | 1.5 | 0.3 | 16.2 | 4.3 |
| 6037573902 | 18.62 | 34.78 | 30-35% | 2091 | Los Angeles | 7.8 | 72.5 | 19.7 | 13.1 | 68.7 | 4 | 0 | 10.4 | 3.8 |
| 6073013414 | 18.61 | 34.77 | 30-35% | 7227 | San Diego | 12.2 | 77.9 | 9.9 | 50.9 | 24 | 3.2 | 0.2 | 18.1 | 3.5 |
| 6073006000 | 18.61 | 34.76 | 30-35% | 3536 | San Diego | 4.4 | 74.5 | 21.1 | 12.8 | 77.6 | 2.1 | 0.2 | 4.8 | 2.5 |
| 6071009202 | 18.61 | 34.75 | 30-35% | 2295 | San Bernardino | 8.6 | 76.2 | 15.2 | 17.2 | 68.5 | 2.1 | 0.5 | 9.5 | 2.2 |
| 6065044931 | 18.60 | 34.73 | 30-35% | 2327 | Riverside | 15.5 | 76.8 | 7.7 | 66.6 | 21.2 | 1.8 | 0.1 | 9.2 | 1.1 |
| 6037700802 | 18.59 | 34.72 | 30-35% | 4069 | Los Angeles | 7.7 | 74.4 | 17.9 | 5.7 | 75.8 | 2.1 | 0.1 | 11 | 5.3 |
| 6001433500 | 18.59 | 34.71 | 30-35% | 4352 | Alameda | 11.9 | 72.1 | 16 | 24.1 | 32.3 | 4 | 0.2 | 36.5 | 2.9 |
| 6037920031 | 18.59 | 34.70 | 30-35% | 5301 | Los Angeles | 8.4 | 57.9 | 33.7 | 21.4 | 63.5 | 3.1 | 0.1 | 10 | 2 |
| 6007002300 | 18.59 | 34.68 | 30-35% | 5331 | Butte | 8.5 | 64.1 | 27.4 | 6.5 | 88.1 | 0.3 | 1.2 | 1.4 | 2.6 |
| 6065049100 | 18.58 | 34.67 | 30-35% | 5264 | Riverside | 12.9 | 65.9 | 21.2 | 45.9 | 48.4 | 2.4 | 0.4 | 1.7 | 1.2 |
| 6075010100 | 18.57 | 34.66 | 30-35% | 3739 | San Francisco | 5.8 | 75.1 | 19.1 | 7.6 | 46.1 | 6.5 | 0.1 | 36.5 | 3.2 |
| 6029006003 | 18.56 | 34.64 | 30-35% | 5580 | Kern | 16.6 | 74.3 | 9.1 | 22.4 | 70 | 1.7 | 0.9 | 1.3 | 3.6 |
| 6037930401 | 18.56 | 34.63 | 30-35% | 2471 | Los Angeles | 11.1 | 75.2 | 13.7 | 10.9 | 74.8 | 3.5 | 0.3 | 6.9 | 3.6 |
| 6067008007 | 18.56 | 34.62 | 30-35% | 3151 | Sacramento | 11.2 | 68.4 | 20.4 | 13.1 | 75.6 | 3.6 | 0.9 | 3.6 | 3.2 |
| 6037297400 | 18.55 | 34.61 | 30-35% | 3603 | Los Angeles | 7.9 | 61.4 | 30.7 | 15.3 | 75.2 | 1.9 | 0.3 | 4.4 | 2.9 |
| 6055201006 | 18.55 | 34.59 | 30-35% | 3283 | Napa | 12.3 | 77 | 10.7 | 26.3 | 44.1 | 4.9 | 0.7 | 18.7 | 5.3 |
| 6001400500 | 18.55 | 34.58 | 30-35% | 3517 | Alameda | 9 | 82.1 | 8.9 | 9.7 | 50.6 | 26.5 | 0.5 | 6 | 6.8 |
| 6073008701 | 18.54 | 34.57 | 30-35% | 3361 | San Diego | 20.1 | 73.6 | 6.3 | 19.2 | 45.5 | 10.4 | 0.6 | 17.8 | 6.5 |
| 6111008001 | 18.53 | 34.56 | 30-35% | 3331 | Ventura | 12.1 | 77.4 | 10.5 | 30.9 | 57.9 | 1.7 | 0.5 | 6.4 | 2.7 |
| 6081601100 | 18.53 | 34.54 | 30-35% | 5716 | San Mateo | 9.1 | 73.8 | 17.1 | 12.4 | 22.1 | 2.1 | 0.1 | 60.1 | 3.1 |
| 6065941200 | 18.52 | 34.53 | 30-35% | 2205 | Riverside | 4.4 | 60.6 | 35 | 15.2 | 76.9 | 2.2 | 0.4 | 3.4 | 1.9 |
| 6075026004 | 18.51 | 34.52 | 30-35% | 4315 | San Francisco | 10.9 | 77.1 | 12 | 37.6 | 13.3 | 1 | 0.1 | 45.9 | 2.1 |
| 6037271300 | 18.51 | 34.51 | 30-35% | 4506 | Los Angeles | 9 | 74.7 | 16.3 | 19.2 | 52.9 | 2.5 | 0.1 | 20.6 | 4.8 |
| 6067007414 | 18.51 | 34.49 | 30-35% | 4317 | Sacramento | 18.1 | 75.8 | 6.1 | 24.9 | 52.7 | 10.5 | 0.6 | 5.8 | 5.5 |
| 6037480011 | 18.50 | 34.48 | 30-35% | 5132 | Los Angeles | 12 | 76.5 | 11.5 | 33 | 19 | 1.9 | 0.1 | 44.6 | 1.4 |
| 6071000115 | 18.50 | 34.47 | 30-35% | 7114 | San Bernardino | 16.3 | 78.4 | 5.3 | 28.9 | 28.1 | 5.4 | 0 | 34.5 | 3.1 |
| 6037503703 | 18.49 | 34.46 | 30-35% | 7876 | Los Angeles | 8.8 | 67.2 | 24 | 20.4 | 30.9 | 1.8 | 0.2 | 44.8 | 1.9 |
| 6073016615 | 18.48 | 34.44 | 30-35% | 3059 | San Diego | 12.1 | 82.4 | 5.5 | 19.9 | 63.6 | 6.7 | 0.8 | 5.8 | 3.1 |
| 6111007512 | 18.47 | 34.43 | 30-35% | 5355 | Ventura | 13.3 | 79.5 | 7.2 | 17.2 | 64.9 | 1.6 | 0.2 | 12 | 4.2 |
| 6085500500 | 18.46 | 34.42 | 30-35% | 5275 | Santa Clara | 12.1 | 73 | 14.9 | 25.3 | 56.7 | 2.2 | 0.5 | 11.9 | 3.5 |
| 6037181500 | 18.46 | 34.41 | 30-35% | 3812 | Los Angeles | 10.8 | 76.9 | 12.3 | 42.2 | 31.4 | 1.4 | 0.4 | 21.4 | 3.2 |
| 6075010300 | 18.46 | 34.39 | 30-35% | 3852 | San Francisco | 4.6 | 77.9 | 17.5 | 5.1 | 60.7 | 0.9 | 0.1 | 30.5 | 2.6 |
| 6037554513 | 18.45 | 34.38 | 30-35% | 2507 | Los Angeles | 9.4 | 73.7 | 16.9 | 8.8 | 9.8 | 9.5 | 0.2 | 69.8 | 1.9 |
| 6079010300 | 18.45 | 34.37 | 30-35% | 10043 | San Luis Obispo | 11.6 | 75.1 | 13.3 | 21.8 | 73.7 | 0.8 | 0.6 | 0.8 | 2.2 |
| 6073018514 | 18.45 | 34.35 | 30-35% | 7947 | San Diego | 11.4 | 75.9 | 12.7 | 22 | 55.8 | 6.7 | 0.3 | 11.4 | 3.8 |
| 6067007421 | 18.45 | 34.34 | 30-35% | 9003 | Sacramento | 15.3 | 78.6 | 6.1 | 13.1 | 58.8 | 5.6 | 0.3 | 17.2 | 4.9 |
| 6037271902 | 18.44 | 34.33 | 30-35% | 3877 | Los Angeles | 9 | 78.9 | 12.1 | 23.9 | 56 | 3.2 | 0.1 | 12.5 | 4.3 |
| 6041106001 | 18.43 | 34.32 | 30-35% | 4048 | Marin | 7.6 | 71.8 | 20.6 | 14.9 | 68 | 3.5 | 0.3 | 9.6 | 3.8 |
| 6005000102 | 18.41 | 34.30 | 30-35% | 1867 | Amador | 7.3 | 69.8 | 22.9 | 8 | 87 | 0 | 1.7 | 1.1 | 2.3 |
| 6061020401 | 18.41 | 34.29 | 30-35% | 2129 | Placer | 10.1 | 75.8 | 14.1 | 12.2 | 80 | 1.5 | 0.8 | 1 | 4.6 |

| | | | | | | | | | | | | | | |
|---|---|---|---|---|---|---|---|---|---|---|---|---|---|---|
| 6071009711 | 18.40 | 34.28 | 30-35% | 9401 | San Bernardino | 11.4 | 72.1 | 16.5 | 23.9 | 59 | 9 | 0.5 | 5.1 | 2.5 |
| 6085512020 | 18.39 | 34.27 | 30-35% | 6858 | Santa Clara | 14.5 | 80 | 5.5 | 36.3 | 22 | 5.2 | 0.2 | 33.2 | 3.1 |
| 6067005403 | 18.38 | 34.25 | 30-35% | 2224 | Sacramento | 2.4 | 59.8 | 37.8 | 6.1 | 75 | 1.7 | 0.1 | 14.7 | 2.3 |
| 6067003300 | 18.38 | 34.24 | 30-35% | 4073 | Sacramento | 9.6 | 67.6 | 22.8 | 12.1 | 60.3 | 2.7 | 0.4 | 20.8 | 3.7 |
| 6067005606 | 18.37 | 34.23 | 30-35% | 4029 | Sacramento | 11 | 72.4 | 16.6 | 15.7 | 67.7 | 6 | 0.4 | 5.7 | 4.4 |
| 6075060700 | 18.37 | 34.22 | 30-35% | 9083 | San Francisco | 5.9 | 88 | 6.1 | 8.3 | 44.8 | 3.6 | 0.2 | 38.8 | 4.2 |
| 6007000202 | 18.37 | 34.20 | 30-35% | 3723 | Butte | 13.3 | 65.8 | 20.9 | 14.8 | 74.4 | 2.8 | 1.6 | 2.2 | 4.2 |
| 6059052415 | 18.37 | 34.19 | 30-35% | 3944 | Orange | 9.9 | 77.7 | 12.4 | 12.9 | 73.9 | 1.1 | 0.2 | 9 | 3 |
| 6037134905 | 18.36 | 34.18 | 30-35% | 2819 | Los Angeles | 8.5 | 82.7 | 8.8 | 12.6 | 61.2 | 8.7 | 0.3 | 12.6 | 4.6 |
| 6073016901 | 18.36 | 34.17 | 30-35% | 6909 | San Diego | 14.4 | 70.2 | 15.4 | 14.1 | 77.9 | 2.7 | 0.7 | 2 | 2.6 |
| 6013359104 | 18.35 | 34.15 | 30-35% | 1932 | Contra Costa | 10.4 | 79.4 | 10.2 | 13.1 | 22.7 | 26.1 | 0.4 | 32.7 | 5 |
| 6037571800 | 18.35 | 34.14 | 30-35% | 3190 | Los Angeles | 9 | 71 | 20 | 16.4 | 59.5 | 8.7 | 0.2 | 11.3 | 3.9 |
| 6029003803 | 18.33 | 34.13 | 30-35% | 4769 | Kern | 15.4 | 77.7 | 6.9 | 20 | 70.8 | 1.3 | 0.6 | 4.5 | 2.7 |
| 6085509107 | 18.32 | 34.12 | 30-35% | 4892 | Santa Clara | 15.2 | 82.2 | 2.6 | 34 | 19.3 | 3.3 | 0.2 | 40.2 | 3 |
| 6037910705 | 18.32 | 34.10 | 30-35% | 11415 | Los Angeles | 18 | 77.3 | 4.7 | 63.2 | 12.4 | 18.1 | 0.2 | 4 | 2 |
| 6085504320 | 18.32 | 34.09 | 30-35% | 2903 | Santa Clara | 11.8 | 75.6 | 12.6 | 11.6 | 15.9 | 1.2 | 0 | 67.9 | 3.3 |
| 6037403304 | 18.31 | 34.08 | 30-35% | 5178 | Los Angeles | 7.8 | 76.2 | 16 | 13.4 | 15.8 | 2.8 | 0 | 65.9 | 2.1 |
| 6001441301 | 18.30 | 34.06 | 30-35% | 3179 | Alameda | 14.3 | 77.2 | 8.5 | 9.6 | 26.1 | 4.2 | 0.2 | 54.7 | 5.3 |
| 6067007906 | 18.30 | 34.05 | 30-35% | 3525 | Sacramento | 10.2 | 73.3 | 16.5 | 10.4 | 77.8 | 3.8 | 0.6 | 3.4 | 4 |
| 6059001601 | 18.30 | 34.04 | 30-35% | 7989 | Orange | 12 | 64 | 24 | 23.3 | 56.4 | 1.5 | 0.2 | 16.1 | 2.5 |
| 6073008358 | 18.29 | 34.03 | 30-35% | 6554 | San Diego | 10.2 | 76.6 | 13.2 | 15.7 | 30.9 | 4 | 0.1 | 44.9 | 4.5 |
| 6071002010 | 18.29 | 34.01 | 30-35% | 9013 | San Bernardino | 17.4 | 78.9 | 3.7 | 38 | 33.3 | 13.3 | 0.1 | 12.2 | 3.1 |
| 6037462500 | 18.29 | 34.00 | 30-35% | 6039 | Los Angeles | 11.6 | 73 | 15.4 | 17.2 | 63.9 | 3.8 | 0.1 | 10.5 | 4.6 |
| 6085503509 | 18.29 | 33.99 | 30-35% | 4040 | Santa Clara | 14.7 | 77.9 | 7.4 | 63.1 | 7.6 | 2.3 | 0.3 | 25 | 1.6 |
| 6081601902 | 18.28 | 33.98 | 30-35% | 5639 | San Mateo | 11.6 | 77.3 | 11.1 | 33.1 | 22.6 | 2.3 | 0.2 | 36.9 | 4.8 |
| 6073019405 | 18.28 | 33.96 | 30-35% | 3592 | San Diego | 15.9 | 79.9 | 4.2 | 52.3 | 33.9 | 4.8 | 0.4 | 5.4 | 3.2 |
| 6001400600 | 18.28 | 33.95 | 30-35% | 1571 | Alameda | 7.9 | 82.9 | 9.2 | 8 | 42.7 | 39.1 | 0.3 | 5.1 | 4.8 |
| 6111008002 | 18.27 | 33.94 | 30-35% | 4827 | Ventura | 14.3 | 77.8 | 7.9 | 35.2 | 56.1 | 0.9 | 0.3 | 5.2 | 2.4 |
| 6053014700 | 18.27 | 33.93 | 30-35% | 6620 | Monterey | 13.9 | 74.7 | 11.4 | 49.6 | 41.6 | 0.9 | 0.2 | 4.4 | 3.2 |
| 6111004101 | 18.27 | 33.91 | 30-35% | 6814 | Ventura | 18.8 | 74.2 | 7 | 86.6 | 6.6 | 1.5 | 0.2 | 4.1 | 1 |
| 6037571503 | 18.26 | 33.90 | 30-35% | 3700 | Los Angeles | 12.7 | 76 | 11.3 | 31.5 | 22.4 | 17.4 | 0.6 | 24.5 | 3.6 |
| 6073002702 | 18.26 | 33.89 | 30-35% | 5180 | San Diego | 11.8 | 78.5 | 9.7 | 29.6 | 34.5 | 18.2 | 0.5 | 13.3 | 3.9 |
| 6059001403 | 18.24 | 33.88 | 30-35% | 3239 | Orange | 10.2 | 71.3 | 18.5 | 31.6 | 58.8 | 0.6 | 0.3 | 6.3 | 2.3 |
| 6037401902 | 18.24 | 33.86 | 30-35% | 5711 | Los Angeles | 8.7 | 62.6 | 28.7 | 14.6 | 70 | 3.7 | 0.2 | 8.7 | 2.9 |
| 6059011709 | 18.23 | 33.85 | 30-35% | 4355 | Orange | 9 | 72.8 | 18.2 | 15.9 | 71 | 1.3 | 0.1 | 9.7 | 2 |
| 6037273402 | 18.23 | 33.84 | 30-35% | 3172 | Los Angeles | 3.9 | 87.5 | 8.6 | 9.8 | 77.6 | 3.5 | 0.4 | 4.7 | 3.9 |
| 6085511911 | 18.22 | 33.83 | 30-35% | 4806 | Santa Clara | 9.4 | 76.9 | 13.7 | 11.3 | 61.5 | 3.9 | 0.4 | 19.1 | 3.8 |
| 6065941400 | 18.22 | 33.81 | 30-35% | 3179 | Riverside | 8.4 | 65.7 | 25.9 | 32.5 | 56.6 | 4.6 | 0.6 | 3.7 | 2 |
| 6037106641 | 18.22 | 33.80 | 30-35% | 2317 | Los Angeles | 9.3 | 73.7 | 17 | 13 | 65.5 | 2.4 | 0.3 | 15.6 | 3.3 |
| 6037113211 | 18.22 | 33.79 | 30-35% | 3787 | Los Angeles | 8.5 | 72.6 | 18.9 | 12.3 | 69.4 | 2.7 | 0.2 | 12.3 | 3.1 |
| 6111003802 | 18.22 | 33.77 | 30-35% | 2888 | Ventura | 19.4 | 72.3 | 8.3 | 88.1 | 7.1 | 2.2 | 0 | 1.6 | 1 |
| 6087100200 | 18.21 | 33.76 | 30-35% | 7071 | Santa Cruz | 10.6 | 81.5 | 7.9 | 25.6 | 63.6 | 1.9 | 0.3 | 4.7 | 3.9 |
| 6043000102 | 18.21 | 33.75 | 30-35% | 2719 | Mariposa | 9.6 | 68.4 | 22 | 9.1 | 83.3 | 0.7 | 2.7 | 1.4 | 2.7 |
| 6111005503 | 18.20 | 33.74 | 30-35% | 3336 | Ventura | 14.3 | 66.7 | 19 | 25.6 | 58.8 | 3.1 | 0.2 | 8 | 4.3 |
| 6073009603 | 18.20 | 33.72 | 30-35% | 4533 | San Diego | 6.2 | 80.9 | 12.9 | 20.8 | 58 | 7 | 0.4 | 9.4 | 4.4 |
| 6071010412 | 18.20 | 33.71 | 30-35% | 7720 | San Bernardino | 13.4 | 70.3 | 16.3 | 16.7 | 74.1 | 2.9 | 0.8 | 2.9 | 2.5 |
| 6059052518 | 18.20 | 33.70 | 30-35% | 2688 | Orange | 5.8 | 92.9 | 1.3 | 9.9 | 60.6 | 2.7 | 0.2 | 21.2 | 5.5 |
| 6073019905 | 18.18 | 33.69 | 30-35% | 4256 | San Diego | 10.1 | 74.9 | 15 | 18.7 | 68 | 3.1 | 0.3 | 6.7 | 3.3 |
| 6073019303 | 18.18 | 33.67 | 30-35% | 6538 | San Diego | 12.5 | 76.4 | 11.1 | 32.3 | 55.6 | 3 | 0.3 | 4.9 | 3.8 |
| 6045011700 | 18.17 | 33.66 | 30-35% | 4181 | Mendocino | 11.2 | 72.9 | 15.9 | 25.6 | 60.1 | 0.6 | 3.9 | 7.9 | 1.9 |
| 6073003214 | 18.17 | 33.65 | 30-35% | 4610 | San Diego | 15.1 | 76.4 | 8.5 | 33 | 15.5 | 21.3 | 0 | 25.2 | 4.9 |
| 6037901010 | 18.15 | 33.64 | 30-35% | 5913 | Los Angeles | 15.3 | 76.2 | 8.5 | 35 | 41.5 | 16.1 | 0.5 | 3.6 | 3.3 |
| 6037430302 | 18.15 | 33.62 | 30-35% | 5837 | Los Angeles | 11.4 | 75.5 | 13.1 | 22 | 63.9 | 3.2 | 0.2 | 7.6 | 3.1 |
| 6001451202 | 18.15 | 33.61 | 30-35% | 3634 | Alameda | 12.3 | 81.3 | 6.4 | 20.6 | 65.5 | 1.2 | 0.4 | 8.9 | 3.4 |
| 6085505401 | 18.15 | 33.60 | 30-35% | 5957 | Santa Clara | 14.1 | 76.9 | 9 | 16.1 | 26.3 | 2.3 | 0.2 | 51.6 | 3.4 |
| 6071002029 | 18.14 | 33.59 | 30-35% | 6077 | San Bernardino | 11.7 | 82 | 6.3 | 33.3 | 48.2 | 5.9 | 0.2 | 9.5 | 2.9 |
| 6065043007 | 18.13 | 33.57 | 30-35% | 6811 | Riverside | 17.4 | 78.3 | 4.3 | 31.9 | 53.1 | 6 | 0.2 | 5.3 | 3.5 |
| 6027000500 | 18.13 | 33.56 | 30-35% | 2568 | Inyo | 10.1 | 70 | 19.9 | 11.2 | 65.2 | 0.4 | 19.6 | 0.9 | 2.7 |
| 6007003100 | 18.13 | 33.55 | 30-35% | 4396 | Butte | 12.2 | 67.2 | 20.6 | 9.8 | 75.4 | 1.9 | 4.8 | 4.4 | 3.8 |
| 6007002100 | 18.13 | 33.54 | 30-35% | 4599 | Butte | 8.9 | 69.5 | 21.6 | 8.5 | 85.4 | 0.6 | 1.1 | 1.6 | 2.9 |
| 6037276603 | 18.13 | 33.52 | 30-35% | 5252 | Los Angeles | 5.7 | 84.1 | 10.2 | 10.6 | 66.1 | 6 | 0.2 | 12 | 5.1 |
| 6073019904 | 18.12 | 33.51 | 30-35% | 6538 | San Diego | 10.5 | 75.9 | 13.6 | 22.2 | 63.2 | 3.2 | 0.2 | 7.8 | 3.4 |
| 6067007430 | 18.12 | 33.50 | 30-35% | 7805 | Sacramento | 16.2 | 78 | 5.8 | 15.4 | 56.9 | 11.5 | 0.6 | 10.1 | 5.6 |
| 6001444200 | 18.10 | 33.48 | 30-35% | 6499 | Alameda | 13.9 | 75.6 | 10.5 | 35.7 | 29.2 | 3.8 | 0.3 | 26.4 | 4.6 |
| 6115041000 | 18.10 | 33.47 | 30-35% | 7357 | Yuba | 10.1 | 73 | 16.9 | 12.5 | 78.7 | 0.7 | 1.7 | 2.5 | 4 |
| 6055201200 | 18.08 | 33.46 | 30-35% | 4739 | Napa | 8.6 | 65.7 | 25.7 | 23.4 | 71.5 | 0.3 | 0.5 | 2.2 | 2.1 |

| | | | | | | | | | | | | | | |
|---|---|---|---|---|---|---|---|---|---|---|---|---|---|---|
| 6037702202 | 18.08 | 33.45 | 30-35% | 3751 | Los Angeles | 9.9 | 74.6 | 15.5 | 14.1 | 71.7 | 2.7 | 0.2 | 7.3 | 3.9 |
| 6015000201 | 18.08 | 33.43 | 30-35% | 7026 | Del Norte | 5.5 | 85.3 | 9.2 | 30.7 | 49.3 | 12.3 | 3.1 | 0.9 | 3.7 |
| 6085512510 | 18.07 | 33.42 | 30-35% | 6194 | Santa Clara | 14.9 | 72.7 | 12.4 | 41.9 | 44.7 | 1.3 | 0.3 | 9.2 | 2.6 |
| 6111001002 | 18.07 | 33.41 | 30-35% | 6834 | Ventura | 11.1 | 71.5 | 17.4 | 25.2 | 69.9 | 0.6 | 0.8 | 1.5 | 2.1 |
| 6055200704 | 18.06 | 33.40 | 30-35% | 4514 | Napa | 13.6 | 71.2 | 15.2 | 41.6 | 54.5 | 0.4 | 0.2 | 1.4 | 1.9 |
| 6017031100 | 18.06 | 33.38 | 30-35% | 5462 | El Dorado | 11.4 | 69.5 | 19.1 | 11.1 | 83.7 | 0.1 | 0.8 | 1 | 3.3 |
| 6015000202 | 18.06 | 33.37 | 30-35% | 3655 | Del Norte | 10.7 | 70.3 | 19 | 16.7 | 72.1 | 0.3 | 7 | 0.9 | 2.9 |
| 6013389200 | 18.06 | 33.36 | 30-35% | 1714 | Contra Costa | 9.3 | 82.2 | 8.5 | 20.2 | 30.2 | 10.9 | 0.5 | 34.3 | 3.9 |
| 6073018507 | 18.05 | 33.35 | 30-35% | 9097 | San Diego | 15.8 | 73 | 11.2 | 45.2 | 35.6 | 4.7 | 0.2 | 10.8 | 3.5 |
| 6085512314 | 18.05 | 33.33 | 30-35% | 5932 | Santa Clara | 15.8 | 74.4 | 9.8 | 48.3 | 39.9 | 1.5 | 0.4 | 7.1 | 2.8 |
| 6111003608 | 18.05 | 33.32 | 30-35% | 3838 | Ventura | 16.6 | 76.8 | 6.6 | 70.8 | 16.7 | 2.3 | 0.3 | 8 | 1.9 |
| 6071000820 | 18.05 | 33.31 | 30-35% | 3958 | San Bernardino | 8.8 | 76.2 | 15 | 22.6 | 63.3 | 3.7 | 0.2 | 7.9 | 2.3 |
| 6059032015 | 18.05 | 33.30 | 30-35% | 6548 | Orange | 9.1 | 73.1 | 17.8 | 20.4 | 63.1 | 1.5 | 0.2 | 11.5 | 3.3 |
| 6019005703 | 18.04 | 33.28 | 30-35% | 5176 | Fresno | 9.4 | 76.8 | 13.8 | 19.5 | 67.7 | 1.3 | 0.7 | 8.3 | 2.4 |
| 6001401200 | 18.03 | 33.27 | 30-35% | 2416 | Alameda | 8.2 | 83.5 | 8.3 | 9.4 | 58.4 | 17.4 | 0.2 | 9.4 | 5.2 |
| 6085503511 | 18.03 | 33.26 | 30-35% | 3665 | Santa Clara | 15.3 | 75.4 | 9.3 | 47.2 | 6.5 | 1.7 | 0.1 | 42.8 | 1.7 |
| 6037463900 | 18.03 | 33.25 | 30-35% | 3456 | Los Angeles | 7.4 | 61.8 | 30.8 | 15.3 | 67.1 | 4.7 | 0.2 | 10.2 | 2.5 |
| 6037910603 | 18.02 | 33.23 | 30-35% | 7075 | Los Angeles | 16.1 | 76.3 | 7.6 | 62.5 | 20.3 | 12.2 | 0.1 | 2.9 | 2 |
| 6037301300 | 18.02 | 33.22 | 30-35% | 2016 | Los Angeles | 12.3 | 70.2 | 17.5 | 10.5 | 79.1 | 0.7 | 0.1 | 7.2 | 2.4 |
| 6067002400 | 18.02 | 33.21 | 30-35% | 4387 | Sacramento | 11.8 | 70.5 | 17.7 | 11.7 | 75.6 | 1.4 | 0.1 | 7.5 | 3.7 |
| 6037554514 | 18.01 | 33.19 | 30-35% | 4322 | Los Angeles | 9.7 | 75.6 | 14.7 | 14 | 16.5 | 10 | 0.1 | 56.3 | 3.1 |
| 6037216300 | 18.01 | 33.18 | 30-35% | 4526 | Los Angeles | 9 | 74.7 | 16.3 | 9.3 | 61.4 | 10.5 | 0.2 | 14.7 | 3.9 |
| 6067008113 | 18.01 | 33.17 | 30-35% | 3752 | Sacramento | 14.8 | 77 | 8.2 | 23.6 | 66.9 | 2 | 0.7 | 2.5 | 4.3 |
| 6089012702 | 18.01 | 33.16 | 30-35% | 3083 | Shasta | 11.2 | 65.3 | 23.5 | 13.9 | 79.7 | 0.1 | 4 | 0.5 | 1.9 |
| 6065041913 | 18.00 | 33.14 | 30-35% | 5478 | Riverside | 12 | 81.4 | 6.6 | 27.7 | 50.7 | 3.6 | 0.2 | 14.8 | 3 |
| 6067004006 | 18.00 | 33.13 | 30-35% | 4843 | Sacramento | 11.9 | 70.6 | 17.5 | 19.2 | 35.6 | 17.2 | 0.6 | 21.8 | 5.5 |
| 6059099407 | 17.99 | 33.12 | 30-35% | 2480 | Orange | 11.2 | 72.1 | 16.7 | 11.7 | 74.2 | 0.6 | 0.4 | 9.9 | 3.3 |
| 6037108101 | 17.99 | 33.11 | 30-35% | 2230 | Los Angeles | 9 | 73.2 | 17.8 | 9.4 | 60.6 | 3.2 | 0.3 | 22.8 | 3.8 |
| 6111002102 | 17.98 | 33.09 | 30-35% | 1832 | Ventura | 5.5 | 82.2 | 12.3 | 13.9 | 78.5 | 0.5 | 0.5 | 2.9 | 3.6 |
| 6059011708 | 17.98 | 33.08 | 30-35% | 4317 | Orange | 9.1 | 83.5 | 7.4 | 27 | 49.5 | 3.6 | 0.2 | 16.8 | 2.9 |
| 6037139600 | 17.97 | 33.07 | 30-35% | 4633 | Los Angeles | 8.7 | 68.9 | 22.4 | 8.5 | 77.6 | 3.7 | 0.2 | 6.5 | 3.6 |
| 6037271600 | 17.97 | 33.06 | 30-35% | 4475 | Los Angeles | 14.7 | 74.5 | 10.8 | 10.1 | 48.8 | 2.1 | 0.2 | 34.8 | 4 |
| 6085503116 | 17.97 | 33.04 | 30-35% | 5240 | Santa Clara | 14.5 | 73.2 | 12.3 | 24.1 | 33.6 | 3.3 | 0.2 | 35.1 | 3.6 |
| 6111003609 | 17.96 | 33.03 | 30-35% | 5966 | Ventura | 7.1 | 68.2 | 24.7 | 12.1 | 78.8 | 1.8 | 0.3 | 4.2 | 2.8 |
| 6065044804 | 17.95 | 33.02 | 30-35% | 2850 | Riverside | 11.4 | 75.4 | 13.2 | 49.5 | 30.1 | 1.6 | 0.4 | 16.8 | 1.6 |
| 6065044516 | 17.93 | 33.01 | 30-35% | 6606 | Riverside | 19.5 | 70.7 | 9.8 | 60 | 29.3 | 6.5 | 0.5 | 1.8 | 1.9 |
| 6073021206 | 17.93 | 32.99 | 30-35% | 2995 | San Diego | 9.8 | 74.3 | 15.9 | 14 | 80 | 0.7 | 1.5 | 1.9 | 1.9 |
| 6037401303 | 17.93 | 32.98 | 30-35% | 2199 | Los Angeles | 8.9 | 78.4 | 12.7 | 23.8 | 47 | 4 | 0 | 22.1 | 3.1 |
| 6089011100 | 17.92 | 32.97 | 30-35% | 3096 | Shasta | 13.4 | 70.5 | 16.1 | 5.8 | 86.2 | 0.7 | 2.2 | 1.6 | 3.4 |
| 6065041808 | 17.92 | 32.95 | 30-35% | 6852 | Riverside | 14.3 | 75.9 | 9.8 | 27.6 | 45.2 | 7.5 | 0.2 | 16.2 | 3.3 |
| 6073006600 | 17.92 | 32.94 | 30-35% | 1920 | San Diego | 40.1 | 59.2 | 0.7 | 28.2 | 29.5 | 22.7 | 0.5 | 9.5 | 9.6 |
| 6097150609 | 17.92 | 32.93 | 30-35% | 4465 | Sonoma | 12.3 | 66.7 | 21 | 24.4 | 65.7 | 1 | 0.2 | 6 | 2.7 |
| 6073019502 | 17.91 | 32.92 | 30-35% | 5715 | San Diego | 21.5 | 75.6 | 2.9 | 82.2 | 12.5 | 2.2 | 0.4 | 1.4 | 1.4 |
| 6037650701 | 17.91 | 32.90 | 30-35% | 2521 | Los Angeles | 9.6 | 70.8 | 19.6 | 11.3 | 50.6 | 1.6 | 0 | 33 | 3.4 |
| 6017031600 | 17.90 | 32.89 | 30-35% | 4126 | El Dorado | 13.3 | 79.7 | 7 | 49.2 | 34.1 | 0.8 | 0.4 | 13.5 | 2 |
| 6081601700 | 17.88 | 32.88 | 30-35% | 4286 | San Mateo | 10.6 | 74.7 | 14.7 | 30.8 | 26.5 | 1.6 | 0.3 | 37.4 | 3.4 |
| 6037901011 | 17.88 | 32.87 | 30-35% | 5069 | Los Angeles | 13.4 | 76.5 | 10.1 | 25.8 | 49.2 | 13.3 | 0.3 | 6.9 | 4.5 |
| 6073020019 | 17.87 | 32.85 | 30-35% | 6832 | San Diego | 10.2 | 60.5 | 29.3 | 26.4 | 63.1 | 2.2 | 0.2 | 5.6 | 2.5 |
| 6067009502 | 17.86 | 32.84 | 30-35% | 7055 | Sacramento | 14 | 76.5 | 9.5 | 38.5 | 54.3 | 1.7 | 0.9 | 2.2 | 2.4 |
| 6065041810 | 17.85 | 32.83 | 30-35% | 5665 | Riverside | 13.4 | 79 | 7.6 | 27.8 | 50.1 | 6.4 | 0.1 | 12.1 | 3.6 |
| 6071002035 | 17.85 | 32.82 | 30-35% | 6874 | San Bernardino | 13.4 | 80.1 | 6.5 | 31.3 | 40.5 | 9.1 | 0.1 | 15.5 | 3.4 |
| 6073016802 | 17.85 | 32.80 | 30-35% | 6942 | San Diego | 7.9 | 69.7 | 22.4 | 12.4 | 82.4 | 0.9 | 0.6 | 1.7 | 2.1 |
| 6065044926 | 17.85 | 32.79 | 30-35% | 4665 | Riverside | 13.3 | 77.7 | 9 | 69.8 | 17 | 1.4 | 0.4 | 10 | 1.4 |
| 6059063907 | 17.84 | 32.78 | 30-35% | 6994 | Orange | 8.6 | 81.7 | 9.7 | 15.7 | 54.1 | 2.1 | 0.2 | 23.6 | 4.3 |
| 6071002018 | 17.83 | 32.77 | 30-35% | 5342 | San Bernardino | 12 | 81.1 | 6.9 | 28.6 | 52.1 | 7.8 | 0.2 | 7.5 | 3.8 |
| 6111003801 | 17.83 | 32.75 | 30-35% | 5778 | Ventura | 19.5 | 74.1 | 6.4 | 94.4 | 2.8 | 1.5 | 0.2 | 0.4 | 0.7 |
| 6071008402 | 17.82 | 32.74 | 30-35% | 6448 | San Bernardino | 11 | 77.7 | 11.3 | 25.2 | 62.2 | 4.6 | 0.3 | 5 | 2.7 |
| 6073009304 | 17.82 | 32.73 | 30-35% | 7944 | San Diego | 5.7 | 89.9 | 4.4 | 17.3 | 59.1 | 5.5 | 0.4 | 13.2 | 4.6 |
| 6073018614 | 17.82 | 32.72 | 30-35% | 6494 | San Diego | 13.6 | 69.8 | 16.6 | 43.6 | 39.3 | 4.6 | 0.6 | 8 | 3.9 |
| 6073016401 | 17.82 | 32.70 | 30-35% | 4996 | San Diego | 11.4 | 69.8 | 18.8 | 19.2 | 70.5 | 3.3 | 0.3 | 3.2 | 3.5 |
| 6109003100 | 17.81 | 32.69 | 30-35% | 6433 | Tuolumne | 8 | 68.8 | 23.2 | 7.1 | 88.1 | 0.2 | 1.4 | 0.9 | 2.3 |
| 6087100300 | 17.80 | 32.68 | 30-35% | 3380 | Santa Cruz | 7.1 | 77.3 | 15.6 | 11.1 | 76.7 | 1.6 | 0.6 | 6.3 | 3.7 |
| 6065041806 | 17.80 | 32.66 | 30-35% | 4255 | Riverside | 14.1 | 80.3 | 5.6 | 30.8 | 47 | 6.7 | 0.4 | 11.9 | 3.1 |
| 6085512053 | 17.80 | 32.65 | 30-35% | 4534 | Santa Clara | 14.3 | 76.4 | 9.3 | 34.1 | 42.9 | 3.7 | 0.6 | 14.3 | 4.4 |
| 6075026200 | 17.79 | 32.64 | 30-35% | 7564 | San Francisco | 10.1 | 76.4 | 13.5 | 28 | 8.8 | 2.3 | 0.1 | 58.8 | 2 |
| 6037408626 | 17.79 | 32.63 | 30-35% | 4341 | Los Angeles | 9.2 | 76.7 | 14.1 | 24.2 | 7 | 1.6 | 0 | 65.4 | 1.7 |

| | | | | | | | | | | | | | | | |
|---|---|---|---|---|---|---|---|---|---|---|---|---|---|---|---|
| 6073020404 | 17.77 | 32.61 | 30-35% | 5070 | San Diego | 12.7 | 75.5 | 11.8 | 25.3 | 58.4 | 2.7 | 0.3 | 10.3 | 3 |
| 6073019302 | 17.76 | 32.60 | 30-35% | 7344 | San Diego | 11.3 | 74.3 | 14.4 | 27.1 | 57.7 | 4.3 | 0.4 | 6.9 | 3.6 |
| 6001443301 | 17.76 | 32.59 | 30-35% | 4074 | Alameda | 15.6 | 74.9 | 9.5 | 6.8 | 29.7 | 1.4 | 0 | 58.7 | 3.4 |
| 6097151000 | 17.76 | 32.58 | 30-35% | 3483 | Sonoma | 9.1 | 74.8 | 16.1 | 14.8 | 79.5 | 0.3 | 0.5 | 2.2 | 2.6 |
| 6085512039 | 17.76 | 32.56 | 30-35% | 4784 | Santa Clara | 15.1 | 78.5 | 6.4 | 32.1 | 20.5 | 4.1 | 0.3 | 39.4 | 3.6 |
| 6029000909 | 17.75 | 32.55 | 30-35% | 2406 | Kern | 9.5 | 69.7 | 20.8 | 27 | 64.7 | 1.7 | 0.5 | 3.9 | 2.2 |
| 6065042217 | 17.74 | 32.54 | 30-35% | 5461 | Riverside | 10.1 | 78.8 | 11.1 | 21.9 | 57.5 | 8.1 | 0.2 | 8.6 | 3.7 |
| 6085503803 | 17.73 | 32.53 | 30-35% | 4477 | Santa Clara | 14 | 76.4 | 9.6 | 19.1 | 12.2 | 2.4 | 0.1 | 63.3 | 2.9 |
| 6065045222 | 17.73 | 32.51 | 30-35% | 1595 | Riverside | 12.8 | 57.9 | 29.3 | 28.9 | 62.1 | 1.7 | 0.4 | 5.1 | 1.8 |
| 6059001708 | 17.73 | 32.50 | 30-35% | 3786 | Orange | 8.2 | 70.8 | 21 | 19.8 | 38.5 | 1.5 | 0.1 | 37.8 | 2.4 |
| 6081601000 | 17.73 | 32.49 | 30-35% | 6913 | San Mateo | 10.1 | 77.2 | 12.7 | 16.9 | 18.1 | 4.9 | 0.1 | 55.6 | 4.4 |
| 6019005515 | 17.72 | 32.48 | 30-35% | 1653 | Fresno | 9.7 | 74 | 16.3 | 14.4 | 72.1 | 1.1 | 0.7 | 8.4 | 3.3 |
| 6067001500 | 17.71 | 32.46 | 30-35% | 4329 | Sacramento | 8 | 76.1 | 15.9 | 11.2 | 78.8 | 1.8 | 0.3 | 4.7 | 3.2 |
| 6073014804 | 17.70 | 32.45 | 30-35% | 4351 | San Diego | 8.9 | 68.4 | 22.7 | 13.7 | 73.5 | 4.7 | 0.6 | 4.2 | 3.4 |
| 6001432100 | 17.70 | 32.44 | 30-35% | 3770 | Alameda | 13.4 | 75.4 | 11.2 | 22.8 | 45.5 | 13.9 | 0.4 | 12.5 | 5 |
| 6037574201 | 17.69 | 32.43 | 30-35% | 3117 | Los Angeles | 11.8 | 74.2 | 14 | 22.3 | 57.6 | 3 | 0.2 | 12.4 | 4.5 |
| 6085513500 | 17.69 | 32.41 | 30-35% | 1144 | Santa Clara | 11.2 | 75.3 | 13.5 | 30.1 | 59.7 | 0.9 | 0.6 | 5.2 | 3.5 |
| 6065045212 | 17.69 | 32.40 | 30-35% | 2293 | Riverside | 6.9 | 44 | 49.1 | 22.9 | 67.4 | 6.9 | 0.1 | 1.7 | 1 |
| 6065050700 | 17.69 | 32.39 | 30-35% | 9969 | Riverside | 19.7 | 75.1 | 5.2 | 30.2 | 47.5 | 8.1 | 0.5 | 10 | 3.8 |
| 6029003804 | 17.68 | 32.37 | 30-35% | 15464 | Kern | 20.4 | 75.5 | 4.1 | 28.9 | 59 | 2.6 | 0.5 | 6.6 | 2.3 |
| 6023000200 | 17.68 | 32.36 | 30-35% | 6211 | Humboldt | 13.3 | 77.4 | 9.3 | 13.2 | 70.3 | 1.7 | 3.7 | 5.8 | 5.3 |
| 6073020710 | 17.68 | 32.35 | 30-35% | 1749 | San Diego | 7.7 | 70.1 | 22.2 | 14.4 | 74.3 | 1 | 0.7 | 7.8 | 1.8 |
| 6007001500 | 17.67 | 32.34 | 30-35% | 5297 | Butte | 10.8 | 75.4 | 13.8 | 12.2 | 83.4 | 0.3 | 0.9 | 0.8 | 2.4 |
| 6071008709 | 17.67 | 32.32 | 30-35% | 4162 | San Bernardino | 13.9 | 69.8 | 16.3 | 29.6 | 65.6 | 0.8 | 0.7 | 1.4 | 1.9 |
| 6065044522 | 17.66 | 32.31 | 30-35% | 4876 | Riverside | 13.5 | 62.8 | 23.7 | 48.9 | 45.7 | 2.7 | 0.4 | 1.4 | 1 |
| 6085512042 | 17.66 | 32.30 | 30-35% | 2841 | Santa Clara | 14.4 | 76.3 | 9.3 | 41.6 | 12.6 | 5 | 0.2 | 38.1 | 2.5 |
| 6001404900 | 17.66 | 32.29 | 30-35% | 4129 | Alameda | 11.3 | 75.3 | 13.4 | 9.7 | 54 | 11.2 | 0 | 20 | 5.2 |
| 6081601901 | 17.65 | 32.27 | 30-35% | 4119 | San Mateo | 11.5 | 76.6 | 11.9 | 31.4 | 23.9 | 2.7 | 0.2 | 36.8 | 4.9 |
| 6085505302 | 17.65 | 32.26 | 30-35% | 4015 | Santa Clara | 12.8 | 73 | 14.2 | 24.7 | 42.2 | 2.2 | 0.1 | 27.8 | 2.9 |
| 6037620601 | 17.65 | 32.25 | 30-35% | 5523 | Los Angeles | 12.2 | 79.5 | 8.3 | 21.7 | 53.6 | 4.5 | 0.3 | 15 | 4.8 |
| 6059052421 | 17.65 | 32.24 | 30-35% | 5111 | Orange | 9.1 | 81 | 9.9 | 8.7 | 57.7 | 1.3 | 0.1 | 28.6 | 3.7 |
| 6041104200 | 17.65 | 32.22 | 30-35% | 5722 | Marin | 11.7 | 67.9 | 20.4 | 22.4 | 67.4 | 1.9 | 0.1 | 4.6 | 3.6 |
| 6111008500 | 17.65 | 32.21 | 30-35% | 8420 | Ventura | 11.1 | 78.1 | 10.8 | 16 | 69.4 | 1.2 | 0.2 | 9.8 | 3.4 |
| 6067008137 | 17.64 | 32.20 | 30-35% | 2432 | Sacramento | 13.5 | 70.3 | 16.2 | 11.4 | 79.9 | 2.8 | 0.2 | 2.8 | 3 |
| 6067007429 | 17.64 | 32.19 | 30-35% | 4889 | Sacramento | 19.4 | 75.7 | 4.9 | 24.3 | 49.4 | 10.9 | 0.8 | 8.2 | 6.3 |
| 6037143500 | 17.64 | 32.17 | 30-35% | 4708 | Los Angeles | 10.7 | 77.4 | 11.9 | 8.1 | 79.1 | 3.5 | 0.2 | 6 | 3.1 |
| 6067009325 | 17.64 | 32.16 | 30-35% | 836 | Sacramento | 7.1 | 76.4 | 16.5 | 17.6 | 68.8 | 2.3 | 0.2 | 9.2 | 1.9 |
| 6037214000 | 17.64 | 32.15 | 30-35% | 3898 | Los Angeles | 18.2 | 69.6 | 12.2 | 3 | 91.3 | 0.7 | 0.1 | 3.4 | 1.4 |
| 6085503903 | 17.63 | 32.14 | 30-35% | 3301 | Santa Clara | 13.9 | 74 | 12.1 | 49.9 | 12.4 | 1.3 | 0.3 | 34.3 | 1.9 |
| 6067009617 | 17.63 | 32.12 | 30-35% | 3545 | Sacramento | 9.8 | 78.2 | 12 | 12.7 | 57.2 | 10 | 0.3 | 15.2 | 4.7 |
| 6053013700 | 17.63 | 32.11 | 30-35% | 5131 | Monterey | 19.3 | 75.4 | 5.3 | 74.2 | 11.7 | 4 | 0.2 | 7.5 | 2.3 |
| 6065043809 | 17.63 | 32.10 | 30-35% | 3015 | Riverside | 5.8 | 52.8 | 41.4 | 15 | 80.5 | 1.2 | 0.6 | 1.5 | 1.2 |
| 6037215102 | 17.63 | 32.08 | 30-35% | 3110 | Los Angeles | 4.4 | 91.8 | 3.8 | 11.4 | 63.5 | 6.7 | 0.2 | 14.5 | 3.7 |
| 6037431800 | 17.63 | 32.07 | 30-35% | 5640 | Los Angeles | 9.3 | 70.4 | 20.3 | 14.4 | 25.9 | 1.1 | 0.1 | 56.8 | 1.7 |
| 6037651101 | 17.62 | 32.06 | 30-35% | 5103 | Los Angeles | 12 | 67 | 21 | 11.2 | 42.3 | 3.3 | 0.1 | 39.7 | 3.4 |
| 6067009106 | 17.62 | 32.05 | 30-35% | 4143 | Sacramento | 9.9 | 77.8 | 12.3 | 15 | 65.8 | 7.7 | 0.3 | 6.6 | 4.5 |
| 6057000801 | 17.62 | 32.03 | 30-35% | 4888 | Nevada | 6.9 | 74.3 | 18.8 | 5 | 90.1 | 0.6 | 0.9 | 1 | 2.4 |
| 6037910714 | 17.61 | 32.02 | 30-35% | 3596 | Los Angeles | 17.9 | 76.2 | 5.9 | 69.7 | 13.3 | 13.7 | 0.4 | 1.7 | 1.3 |
| 6001441800 | 17.60 | 32.01 | 30-35% | 6786 | Alameda | 14.8 | 74.8 | 10.4 | 15.8 | 33.9 | 3.6 | 0.2 | 42.1 | 4.4 |
| 6033000100 | 17.60 | 32.00 | 30-35% | 3121 | Lake | 12.2 | 71.7 | 16.1 | 15.3 | 73.8 | 1 | 6.3 | 0.7 | 2.9 |
| 6067008132 | 17.60 | 31.98 | 30-35% | 3710 | Sacramento | 10.1 | 67.2 | 22.7 | 10.5 | 76.5 | 2.5 | 0.4 | 7 | 3.1 |
| 6013357000 | 17.60 | 31.97 | 30-35% | 3018 | Contra Costa | 7 | 77.4 | 15.6 | 15 | 72.1 | 4.2 | 0.5 | 4.1 | 4 |
| 6111007606 | 17.60 | 31.96 | 30-35% | 1555 | Ventura | 13.6 | 78.8 | 7.6 | 29.3 | 52.8 | 1.6 | 0.1 | 13.6 | 2.6 |
| 6071002025 | 17.59 | 31.95 | 30-35% | 5056 | San Bernardino | 10.4 | 73.4 | 16.2 | 31 | 57.1 | 5.1 | 0.3 | 3.7 | 2.7 |
| 6037910605 | 17.59 | 31.93 | 30-35% | 4535 | Los Angeles | 16.7 | 77.4 | 5.9 | 64.4 | 19.5 | 11.8 | 0.4 | 1.9 | 1.9 |
| 6075025200 | 17.58 | 31.92 | 30-35% | 5369 | San Francisco | 9.9 | 80.1 | 10 | 27.6 | 53.8 | 3.8 | 0.4 | 10.2 | 4.2 |
| 6073008503 | 17.57 | 31.91 | 30-35% | 6599 | San Diego | 10.4 | 74.1 | 15.5 | 21.5 | 67.7 | 1.4 | 0.4 | 5.7 | 3.3 |
| 6059021812 | 17.57 | 31.90 | 30-35% | 6339 | Orange | 11.8 | 78.2 | 10 | 26.7 | 56.3 | 2.3 | 0.3 | 11.6 | 2.7 |
| 6071007104 | 17.56 | 31.88 | 30-35% | 4093 | San Bernardino | 10.6 | 75.5 | 13.9 | 33.7 | 50.8 | 3.7 | 0.4 | 8.7 | 2.7 |
| 6097150305 | 17.56 | 31.87 | 30-35% | 5282 | Sonoma | 18.1 | 75 | 6.9 | 60.3 | 36.3 | 0.4 | 0.3 | 1.1 | 1.6 |
| 6059110118 | 17.56 | 31.86 | 30-35% | 2668 | Orange | 8.7 | 82 | 9.3 | 8.8 | 30.6 | 2.8 | 0.1 | 54.8 | 3 |
| 6037143700 | 17.56 | 31.85 | 30-35% | 3748 | Los Angeles | 7.9 | 78.5 | 13.6 | 7.1 | 78.1 | 4.2 | 0.1 | 7.1 | 3.5 |
| 6067008006 | 17.56 | 31.83 | 30-35% | 5718 | Sacramento | 8.7 | 71.7 | 19.6 | 8.2 | 81.3 | 2 | 0.3 | 4.8 | 3.3 |
| 6071002019 | 17.55 | 31.82 | 30-35% | 4757 | San Bernardino | 11.5 | 82.8 | 5.7 | 30.4 | 42.2 | 12 | 0.2 | 11.5 | 3.7 |
| 6111008004 | 17.55 | 31.81 | 30-35% | 5156 | Ventura | 12.1 | 78.7 | 9.2 | 34.5 | 54.9 | 1.1 | 0.3 | 5.8 | 3.3 |
| 6083001800 | 17.54 | 31.79 | 30-35% | 1245 | Santa Barbara | 12.8 | 73.5 | 13.7 | 44.6 | 52.6 | 0.6 | 0.4 | 0.6 | 1.1 |

| | | | | | | | | | | | | | | |
|---|---|---|---|---|---|---|---|---|---|---|---|---|---|---|
| 6089011702 | 17.54 | 31.78 | 30-35% | 3476 | Shasta | 12.9 | 76 | 11.1 | 8.6 | 78.8 | 0.3 | 3.8 | 4.4 | 4.1 |
| 6077005210 | 17.53 | 31.77 | 30-35% | 11433 | San Joaquin | 17.1 | 77.8 | 5.1 | 28.8 | 38 | 7.3 | 0.3 | 20.2 | 5.3 |
| 6089010200 | 17.53 | 31.76 | 30-35% | 2078 | Shasta | 10.3 | 66.7 | 23 | 7.1 | 85.2 | 1.3 | 1.6 | 1.9 | 2.9 |
| 6013339001 | 17.52 | 31.74 | 30-35% | 3362 | Contra Costa | 8.8 | 84.7 | 6.5 | 17 | 56.7 | 4.6 | 0 | 17.2 | 4.5 |
| 6065040816 | 17.50 | 31.73 | 30-35% | 2594 | Riverside | 12.4 | 81.7 | 5.9 | 27.4 | 39.4 | 12.5 | 0.3 | 17.8 | 2.6 |
| 6085504316 | 17.50 | 31.72 | 30-35% | 4839 | Santa Clara | 13.6 | 77 | 9.4 | 17 | 9.7 | 2.4 | 0.3 | 68.3 | 2.3 |
| 6089011500 | 17.50 | 31.71 | 30-35% | 5485 | Shasta | 9.7 | 67.7 | 22.6 | 7.2 | 85.1 | 0.2 | 2.9 | 1.8 | 2.8 |
| 6013337200 | 17.49 | 31.69 | 30-35% | 7183 | Contra Costa | 11 | 74 | 15 | 21.5 | 57.2 | 4.2 | 0.3 | 12 | 4.7 |
| 6013333200 | 17.49 | 31.68 | 30-35% | 5926 | Contra Costa | 10.8 | 73.1 | 16.1 | 19.7 | 63.6 | 2.4 | 0.2 | 10.4 | 3.7 |
| 6073000400 | 17.49 | 31.67 | 30-35% | 3669 | San Diego | 3.6 | 86.9 | 9.5 | 15.6 | 66.6 | 4.1 | 0.4 | 9.9 | 3.4 |
| 6097151204 | 17.49 | 31.66 | 30-35% | 3413 | Sonoma | 11.5 | 78.4 | 10.1 | 18.6 | 70.8 | 1.6 | 0.7 | 4.3 | 4.1 |
| 6071007901 | 17.48 | 31.64 | 30-35% | 7908 | San Bernardino | 12.9 | 77.9 | 9.2 | 26.3 | 51.3 | 6.7 | 0.3 | 11.6 | 3.9 |
| 6059110202 | 17.47 | 31.63 | 30-35% | 7762 | Orange | 13.6 | 77.8 | 8.6 | 37 | 27.2 | 4.5 | 0.2 | 28.1 | 3 |
| 6037574400 | 17.47 | 31.62 | 30-35% | 5141 | Los Angeles | 11.3 | 72.9 | 15.8 | 15.5 | 69.1 | 2.8 | 0.4 | 8.7 | 3.5 |
| 6037194401 | 17.46 | 31.61 | 30-35% | 2461 | Los Angeles | 4.5 | 77.8 | 17.7 | 10.1 | 77.4 | 2.9 | 0.1 | 6.5 | 3 |
| 6111001201 | 17.46 | 31.59 | 30-35% | 4235 | Ventura | 12.8 | 68.3 | 18.9 | 34.6 | 57.6 | 1.8 | 0.5 | 3.1 | 2.4 |
| 6071010901 | 17.45 | 31.58 | 30-35% | 5321 | San Bernardino | 11.1 | 74 | 14.9 | 16.9 | 77.9 | 0.6 | 0.4 | 1.3 | 2.9 |
| 6037111204 | 17.45 | 31.57 | 30-35% | 5859 | Los Angeles | 8.5 | 72.7 | 18.8 | 14.9 | 58.8 | 3.8 | 0.1 | 19.7 | 2.7 |
| 6059063102 | 17.45 | 31.56 | 30-35% | 6257 | Orange | 10.6 | 79.7 | 9.7 | 14 | 77.5 | 0.6 | 0.2 | 4.4 | 3.3 |
| 6067008134 | 17.44 | 31.54 | 30-35% | 4647 | Sacramento | 12.9 | 74.7 | 12.4 | 15.5 | 69 | 5.3 | 0.8 | 4 | 5.5 |
| 6033000300 | 17.44 | 31.53 | 30-35% | 3846 | Lake | 8.8 | 69.3 | 21.9 | 16 | 76.7 | 1.4 | 2.1 | 1.2 | 2.7 |
| 6001427100 | 17.43 | 31.52 | 30-35% | 3646 | Alameda | 13.5 | 69.4 | 17.1 | 9.3 | 67.4 | 2.1 | 0.3 | 14.7 | 6.2 |
| 6053010102 | 17.43 | 31.50 | 30-35% | 3279 | Monterey | 11.8 | 76.8 | 11.4 | 44.5 | 49.6 | 0.3 | 0.3 | 3.1 | 2.2 |
| 6067008139 | 17.43 | 31.49 | 30-35% | 3360 | Sacramento | 11.7 | 76 | 12.3 | 22.1 | 63.2 | 3.4 | 1 | 5.1 | 5.3 |
| 6111000702 | 17.42 | 31.48 | 30-35% | 3065 | Ventura | 15.1 | 74.3 | 10.6 | 78.6 | 19.7 | 0.2 | 0.4 | 0.6 | 0.6 |
| 6053013900 | 17.41 | 31.47 | 30-35% | 2673 | Monterey | 13.7 | 73.7 | 12.6 | 39.6 | 38 | 5.2 | 0.5 | 11.7 | 5 |
| 6075025402 | 17.41 | 31.45 | 30-35% | 2912 | San Francisco | 10.9 | 75.9 | 13.2 | 28.3 | 38 | 5.7 | 0.4 | 23.4 | 4.2 |
| 6045010600 | 17.41 | 31.44 | 30-35% | 6917 | Mendocino | 10.5 | 74.8 | 14.7 | 10.6 | 83.1 | 0.3 | 2 | 0.8 | 3.2 |
| 6075022702 | 17.40 | 31.43 | 30-35% | 2060 | San Francisco | 8.7 | 80.7 | 10.6 | 12.3 | 69.6 | 2.1 | 0 | 11.2 | 4.7 |
| 6067004012 | 17.40 | 31.42 | 30-35% | 3267 | Sacramento | 10 | 79.2 | 10.8 | 13.8 | 37.8 | 11.2 | 0.3 | 32.1 | 4.8 |
| 6067007017 | 17.40 | 31.40 | 30-35% | 2770 | Sacramento | 16.4 | 79 | 4.6 | 23.2 | 42.9 | 9.9 | 0.4 | 18.7 | 5 |
| 6059110113 | 17.39 | 31.39 | 30-35% | 2276 | Orange | 10.1 | 72.7 | 17.2 | 22 | 44 | 1.1 | 0.1 | 29 | 3.6 |
| 6059110012 | 17.38 | 31.38 | 30-35% | 5012 | Orange | 10.3 | 64.3 | 25.4 | 10.9 | 70.9 | 1.1 | 0.2 | 13.9 | 3.1 |
| 6037276400 | 17.38 | 31.37 | 30-35% | 4009 | Los Angeles | 12 | 71.3 | 16.7 | 11.6 | 70.8 | 2.6 | 0.1 | 11 | 4 |
| 6073003207 | 17.38 | 31.35 | 30-35% | 5890 | San Diego | 11.2 | 73.3 | 15.5 | 44.6 | 35.4 | 5.1 | 0.4 | 11.2 | 3.3 |
| 6053010604 | 17.38 | 31.34 | 30-35% | 5512 | Monterey | 18.2 | 74.9 | 6.9 | 79.5 | 7.5 | 1.8 | 0.5 | 9.3 | 1.3 |
| 6085509105 | 17.37 | 31.33 | 30-35% | 6396 | Santa Clara | 11.4 | 77.3 | 11.3 | 14 | 43.5 | 2.6 | 0.1 | 35.7 | 4.1 |
| 6059099412 | 17.36 | 31.32 | 30-35% | 4630 | Orange | 11 | 74.9 | 14.1 | 13.9 | 70.2 | 1.7 | 0.3 | 9.8 | 4.1 |
| 6037215101 | 17.36 | 31.30 | 30-35% | 2477 | Los Angeles | 4.8 | 90.2 | 5 | 14.1 | 54.5 | 10 | 0.2 | 17.4 | 3.8 |
| 6059099405 | 17.36 | 31.29 | 30-35% | 4468 | Orange | 11.8 | 76.8 | 11.4 | 16.9 | 67.6 | 2.1 | 0.1 | 8.9 | 4.4 |
| 6083002006 | 17.35 | 31.28 | 30-35% | 2240 | Santa Barbara | 9.1 | 71.1 | 19.8 | 24.7 | 68.9 | 0.4 | 0.8 | 3 | 2.1 |
| 6059011718 | 17.35 | 31.26 | 30-35% | 3263 | Orange | 10.8 | 74.3 | 14.9 | 20.3 | 66.8 | 1.4 | 0.2 | 9.5 | 1.9 |
| 6037577603 | 17.34 | 31.25 | 30-35% | 8255 | Los Angeles | 9.6 | 74 | 16.4 | 11.9 | 74.5 | 2.4 | 0.2 | 7.2 | 3.8 |
| 6065043274 | 17.34 | 31.24 | 30-35% | 2545 | Riverside | 19.1 | 74.8 | 6.1 | 39 | 47.7 | 2.3 | 0.4 | 7.9 | 2.7 |
| 6087101000 | 17.34 | 31.23 | 30-35% | 7866 | Santa Cruz | 8.2 | 84.5 | 7.3 | 30.9 | 55.9 | 1.8 | 0.5 | 7 | 3.9 |
| 6037702102 | 17.33 | 31.21 | 30-35% | 6306 | Los Angeles | 5.8 | 80 | 14.2 | 10.3 | 77.7 | 2.1 | 0.3 | 5.8 | 3.8 |
| 6097152905 | 17.33 | 31.20 | 30-35% | 4037 | Sonoma | 12.5 | 76 | 11.5 | 27 | 59.7 | 3 | 1.4 | 6.4 | 2.4 |
| 6081606600 | 17.32 | 31.19 | 30-35% | 3703 | San Mateo | 14.1 | 74.4 | 11.5 | 21.2 | 55.8 | 1.2 | 0.1 | 17.6 | 4.1 |
| 6071000104 | 17.31 | 31.18 | 30-35% | 6117 | San Bernardino | 10.1 | 81.8 | 8.1 | 25.7 | 25.1 | 5.8 | 0.1 | 40.3 | 3 |
| 6037910709 | 17.31 | 31.16 | 30-35% | 1650 | Los Angeles | 11.6 | 75.8 | 12.6 | 38.8 | 50.5 | 5.1 | 0.3 | 2.1 | 3.2 |
| 6065043240 | 17.31 | 31.15 | 30-35% | 8802 | Riverside | 19.6 | 75.1 | 5.3 | 26.4 | 50.3 | 7.1 | 0.6 | 11.6 | 4 |
| 6031000602 | 17.30 | 31.14 | 30-35% | 5676 | Kings | 13.6 | 73.9 | 12.5 | 26.6 | 62 | 3.4 | 0.5 | 4.5 | 3 |
| 6087123100 | 17.30 | 31.13 | 30-35% | 2638 | Santa Cruz | 14.9 | 73.4 | 11.7 | 57.2 | 38.4 | 0.1 | 0.6 | 2.4 | 1.3 |
| 6085504321 | 17.30 | 31.11 | 30-35% | 5346 | Santa Clara | 13.9 | 75.9 | 10.2 | 20 | 10.8 | 2 | 0.1 | 65.1 | 2 |
| 6111003700 | 17.30 | 31.10 | 30-35% | 6679 | Ventura | 17.7 | 74.6 | 7.7 | 90.2 | 4.3 | 3.2 | 0.3 | 1.2 | 0.9 |
| 6081610602 | 17.30 | 31.09 | 30-35% | 3386 | San Mateo | 13.7 | 76.7 | 9.6 | 44.1 | 44.7 | 1 | 0.2 | 7.1 | 2.9 |
| 6073020020 | 17.29 | 31.08 | 30-35% | 7477 | San Diego | 17.1 | 76.3 | 6.6 | 25.1 | 48.1 | 2.4 | 0.3 | 20 | 4.2 |
| 6061021034 | 17.29 | 31.06 | 30-35% | 3901 | Placer | 16.6 | 79.1 | 4.3 | 11.9 | 69.7 | 1.8 | 0.2 | 12.4 | 4 |
| 6059110115 | 17.29 | 31.05 | 30-35% | 3613 | Orange | 11.3 | 70.1 | 18.6 | 15.1 | 27.8 | 6.7 | 0.4 | 46.9 | 3.1 |
| 6037574800 | 17.28 | 31.04 | 30-35% | 3000 | Los Angeles | 7.5 | 75.8 | 16.7 | 12.2 | 67.7 | 3.8 | 0.2 | 12.1 | 3.9 |
| 6019005904 | 17.27 | 31.03 | 30-35% | 4192 | Fresno | 14.4 | 73 | 12.6 | 26.7 | 49.6 | 1.3 | 0.4 | 20 | 2 |
| 6037701402 | 17.27 | 31.01 | 30-35% | 6696 | Los Angeles | 4.4 | 73.9 | 21.7 | 8.3 | 77.8 | 2.3 | 0.1 | 8 | 3.4 |
| 6001450745 | 17.27 | 31.00 | 30-35% | 5956 | Alameda | 15.6 | 77 | 7.4 | 7.1 | 44.4 | 1.6 | 0 | 42.9 | 3.9 |
| 6085505403 | 17.26 | 30.99 | 30-35% | 6595 | Santa Clara | 13.8 | 78.7 | 7.5 | 18.9 | 35.1 | 3.1 | 0.3 | 38.6 | 4 |
| 6073020025 | 17.26 | 30.97 | 30-35% | 4626 | San Diego | 11.9 | 76.5 | 11.6 | 31.2 | 55.8 | 2.8 | 0.6 | 6.3 | 3.3 |
| 6073003113 | 17.26 | 30.96 | 30-35% | 5043 | San Diego | 10.3 | 76.8 | 12.9 | 20.4 | 5.7 | 17 | 0.1 | 53.6 | 3.3 |

| | | | | | | | | | | | | | | |
|---|---|---|---|---|---|---|---|---|---|---|---|---|---|---|
| 6085509403 | 17.25 | 30.95 | 30-35% | 5121 | Santa Clara | 15 | 81.2 | 3.8 | 49.9 | 24.3 | 2.4 | 0.2 | 21.1 | 2 |
| 6085502301 | 17.24 | 30.94 | 30-35% | 3245 | Santa Clara | 12.9 | 73.5 | 13.6 | 21.5 | 66.3 | 2.1 | 0.3 | 6.5 | 3.2 |
| 6085507806 | 17.24 | 30.92 | 30-35% | 5889 | Santa Clara | 18.3 | 74.5 | 7.2 | 2.8 | 17.8 | 0.4 | 0.2 | 76.1 | 2.7 |
| 6081603700 | 17.24 | 30.91 | 30-35% | 5430 | San Mateo | 9.6 | 72.9 | 17.5 | 19.9 | 35 | 2.1 | 0.1 | 38.3 | 4.5 |
| 6001451503 | 17.24 | 30.90 | 30-35% | 5660 | Alameda | 13.1 | 74.9 | 12 | 21.7 | 65 | 1.9 | 0.4 | 7.4 | 3.7 |
| 6073016806 | 17.23 | 30.89 | 30-35% | 4081 | San Diego | 14.3 | 74.3 | 11.4 | 22.2 | 68 | 2.8 | 0.8 | 2.4 | 3.9 |
| 6061020712 | 17.22 | 30.87 | 30-35% | 3560 | Placer | 11.1 | 67.5 | 21.4 | 24.6 | 69.7 | 1.2 | 0.4 | 1.9 | 2.3 |
| 6013359105 | 17.21 | 30.86 | 30-35% | 4542 | Contra Costa | 14.5 | 78.3 | 7.2 | 12.3 | 19 | 16.2 | 0.3 | 47.5 | 4.8 |
| 6001450752 | 17.21 | 30.85 | 30-35% | 5262 | Alameda | 22.2 | 72.4 | 5.4 | 7.2 | 33.5 | 3.6 | 0.2 | 50.3 | 5.2 |
| 6085509303 | 17.20 | 30.84 | 30-35% | 3706 | Santa Clara | 10.4 | 70.8 | 18.8 | 24.4 | 42.7 | 2.7 | 0.1 | 26.1 | 4 |
| 6073001100 | 17.20 | 30.82 | 30-35% | 3098 | San Diego | 7.6 | 85.2 | 7.2 | 26.7 | 55.9 | 8.3 | 0.5 | 4.7 | 4 |
| 6073016616 | 17.19 | 30.81 | 30-35% | 4067 | San Diego | 14.3 | 73.7 | 12 | 17.7 | 70.6 | 2.4 | 0.5 | 5.2 | 3.6 |
| 6029003809 | 17.19 | 30.80 | 30-35% | 10984 | Kern | 14.5 | 78.4 | 7.1 | 21.5 | 67.6 | 2.2 | 0.8 | 5.3 | 2.7 |
| 6067009309 | 17.19 | 30.79 | 30-35% | 2282 | Sacramento | 9.5 | 69.2 | 21.3 | 13.3 | 74.7 | 1.8 | 1.1 | 5.3 | 3.9 |
| 6081605900 | 17.19 | 30.77 | 30-35% | 5579 | San Mateo | 12.1 | 73.8 | 14.1 | 31.7 | 45.2 | 2.4 | 0.1 | 16.2 | 4.4 |
| 6015000102 | 17.18 | 30.76 | 30-35% | 3769 | Del Norte | 13.7 | 70.7 | 15.6 | 11.8 | 71.9 | 0.2 | 8.9 | 3.2 | 4.1 |
| 6075016300 | 17.18 | 30.75 | 30-35% | 4293 | San Francisco | 6.2 | 85.9 | 7.9 | 12.8 | 50.3 | 18.7 | 0.4 | 13.4 | 4.4 |
| 6037620521 | 17.18 | 30.74 | 30-35% | 4097 | Los Angeles | 13.6 | 79.7 | 6.7 | 23.1 | 53.6 | 5.4 | 0.1 | 12.2 | 5.5 |
| 6001450300 | 17.18 | 30.72 | 30-35% | 4551 | Alameda | 14.4 | 76.3 | 9.3 | 15 | 58.6 | 3.5 | 0.3 | 17.4 | 5.2 |
| 6001438000 | 17.15 | 30.71 | 30-35% | 3283 | Alameda | 13.2 | 75.7 | 11.1 | 32.7 | 32.7 | 8 | 0.2 | 21.6 | 4.7 |
| 6085512313 | 17.15 | 30.70 | 30-35% | 3887 | Santa Clara | 18.1 | 75 | 6.9 | 55.3 | 34.2 | 2.2 | 0.2 | 5.4 | 2.7 |
| 6059110116 | 17.14 | 30.68 | 30-35% | 4761 | Orange | 11.2 | 73 | 15.8 | 14.9 | 23.7 | 4.1 | 0 | 54.1 | 3.2 |
| 6001451300 | 17.14 | 30.67 | 30-35% | 6560 | Alameda | 13.1 | 78.9 | 8 | 21 | 67.1 | 1.8 | 0.3 | 6.2 | 3.6 |
| 6001403900 | 17.13 | 30.66 | 30-35% | 3584 | Alameda | 6.6 | 82.4 | 11 | 9 | 55.4 | 16 | 0.4 | 13.7 | 5.6 |
| 6037650800 | 17.12 | 30.65 | 30-35% | 7074 | Los Angeles | 12.7 | 73.4 | 13.9 | 5.8 | 24.5 | 1.8 | 0.1 | 64.7 | 3.2 |
| 6037910606 | 17.12 | 30.63 | 30-35% | 2970 | Los Angeles | 17 | 77.9 | 5.1 | 64.6 | 19.6 | 12.3 | 0.6 | 1.5 | 1.4 |
| 6029005404 | 17.12 | 30.62 | 30-35% | 6672 | Kern | 14.8 | 74.2 | 11 | 17 | 70.6 | 3.6 | 0.6 | 3.9 | 4.3 |
| 6075010500 | 17.10 | 30.61 | 30-35% | 2685 | San Francisco | 4.2 | 70 | 25.8 | 5.8 | 61.6 | 1.7 | 0.1 | 29 | 1.8 |
| 6001427800 | 17.09 | 30.60 | 30-35% | 4640 | Alameda | 11.5 | 76.9 | 11.6 | 11.8 | 51.9 | 4.4 | 0.3 | 25.2 | 6.4 |
| 6057000900 | 17.09 | 30.58 | 30-35% | 4348 | Nevada | 8.6 | 77.8 | 13.6 | 5.4 | 87.4 | 0.6 | 1.2 | 1.2 | 4.3 |
| 6037480704 | 17.09 | 30.57 | 30-35% | 4531 | Los Angeles | 10 | 80.2 | 9.8 | 20.6 | 36.2 | 2.2 | 0.2 | 37.1 | 3.8 |
| 6097151100 | 17.08 | 30.56 | 30-35% | 5151 | Sonoma | 11.5 | 76.4 | 12.1 | 14.5 | 79.8 | 1.2 | 0.4 | 1.3 | 2.8 |
| 6111003605 | 17.07 | 30.55 | 30-35% | 8606 | Ventura | 13.8 | 77.4 | 8.8 | 49.3 | 33.5 | 4 | 0.2 | 9.8 | 3.2 |
| 6033000600 | 17.06 | 30.53 | 30-35% | 3957 | Lake | 7 | 64.9 | 28.1 | 9.1 | 82.1 | 2 | 2.1 | 1.5 | 3.3 |
| 6001404800 | 17.06 | 30.52 | 30-35% | 2684 | Alameda | 12.5 | 74.6 | 12.9 | 11.5 | 45.5 | 19.7 | 0.6 | 17.2 | 5.5 |
| 6037599000 | 17.05 | 30.51 | 30-35% | 3569 | Los Angeles | 12.6 | 76.1 | 11.3 | 55.8 | 41.2 | 0.3 | 0.2 | 1.4 | 1.1 |
| 6065043256 | 17.04 | 30.50 | 30-35% | 3478 | Riverside | 15.9 | 80.2 | 3.9 | 30.6 | 46.7 | 6.7 | 0.7 | 10.2 | 5 |
| 6073003114 | 17.03 | 30.48 | 30-35% | 3341 | San Diego | 11.7 | 79.4 | 8.9 | 14.8 | 3.9 | 17.7 | 0 | 60.1 | 3.6 |
| 6037403703 | 17.03 | 30.47 | 30-35% | 4748 | Los Angeles | 9.9 | 73.5 | 16.6 | 35.3 | 46.7 | 2.8 | 0.2 | 12.9 | 2.2 |
| 6037920330 | 17.03 | 30.46 | 30-35% | 5349 | Los Angeles | 9.4 | 74.5 | 16.1 | 13.7 | 70.5 | 1.9 | 0.1 | 11.1 | 2.7 |
| 6089010900 | 17.03 | 30.45 | 30-35% | 4293 | Shasta | 14 | 66.7 | 19.3 | 11.3 | 75.1 | 1.4 | 2.3 | 5.2 | 4.8 |
| 6035040200 | 17.02 | 30.43 | 30-35% | 2534 | Lassen | 10.1 | 73.5 | 16.4 | 9.4 | 84 | 0.1 | 4 | 0.7 | 1.8 |
| 6061020714 | 17.02 | 30.42 | 30-35% | 3660 | Placer | 9.1 | 75.7 | 15.2 | 9.9 | 81.2 | 1.5 | 0.6 | 4.5 | 2.3 |
| 6037271100 | 17.02 | 30.41 | 30-35% | 2449 | Los Angeles | 12.4 | 74.4 | 13.2 | 19.1 | 53.7 | 2.5 | 0 | 19.4 | 5.2 |
| 6071009709 | 17.02 | 30.39 | 30-35% | 6356 | San Bernardino | 17.1 | 72.8 | 10.1 | 37.7 | 50.6 | 6.3 | 0.5 | 2 | 3 |
| 6059110304 | 17.01 | 30.38 | 30-35% | 4612 | Orange | 9.2 | 77.5 | 13.3 | 21.5 | 37.7 | 2.6 | 0.2 | 35.2 | 2.7 |
| 6037460301 | 17.01 | 30.37 | 30-35% | 4638 | Los Angeles | 11.2 | 76.3 | 12.5 | 19.6 | 34.4 | 34.8 | 0.2 | 4.9 | 6.1 |
| 6073016606 | 17.00 | 30.36 | 30-35% | 3388 | San Diego | 11.7 | 78.9 | 9.4 | 16.4 | 72.7 | 0.6 | 0.4 | 5.7 | 4.2 |
| 6081608600 | 17.00 | 30.34 | 30-35% | 4359 | San Mateo | 13.8 | 77.9 | 8.3 | 17.5 | 45.5 | 2.8 | 0.1 | 28.6 | 5.5 |
| 6037310100 | 16.99 | 30.33 | 30-35% | 5849 | Los Angeles | 10.3 | 71 | 18.7 | 10.7 | 72.5 | 0.9 | 0.1 | 12.9 | 2.8 |
| 6067009108 | 16.99 | 30.32 | 30-35% | 3693 | Sacramento | 11.7 | 71.8 | 16.5 | 18.4 | 58.8 | 5.1 | 0.8 | 11.8 | 5 |
| 6013338101 | 16.98 | 30.31 | 30-35% | 4996 | Contra Costa | 14.2 | 75.9 | 9.9 | 42.1 | 35.9 | 4.9 | 0.2 | 12 | 4.8 |
| 6037901009 | 16.97 | 30.29 | 30-35% | 5318 | Los Angeles | 12.7 | 73.9 | 13.4 | 26.6 | 50.4 | 15 | 0.3 | 4.3 | 3.4 |
| 6037211701 | 16.96 | 30.28 | 30-35% | 2827 | Los Angeles | 11.8 | 74.8 | 13.4 | 10.3 | 29.4 | 4.4 | 0 | 54.4 | 1.6 |
| 6111008303 | 16.96 | 30.27 | 30-35% | 3767 | Ventura | 12.8 | 72.1 | 15.1 | 23.7 | 59.3 | 1.4 | 0.2 | 11.9 | 3.5 |
| 6001428200 | 16.95 | 30.26 | 30-35% | 6259 | Alameda | 12.4 | 72.8 | 14.8 | 9.9 | 54.1 | 3.6 | 0.2 | 26.2 | 6 |
| 6037124700 | 16.95 | 30.24 | 30-35% | 4796 | Los Angeles | 10.2 | 76.1 | 13.7 | 12.7 | 73.3 | 4.9 | 0.1 | 6 | 2.9 |
| 6111005303 | 16.94 | 30.23 | 30-35% | 9416 | Ventura | 14.8 | 75.8 | 9.4 | 19 | 60.1 | 1.6 | 0.2 | 15.3 | 3.9 |
| 6111001506 | 16.94 | 30.22 | 30-35% | 5027 | Ventura | 12.5 | 75.1 | 12.4 | 31.4 | 60.6 | 1.1 | 0.5 | 3.3 | 3.1 |
| 6061021045 | 16.94 | 30.21 | 30-35% | 2962 | Placer | 14.5 | 77.5 | 8 | 21.9 | 68.3 | 1.1 | 0.6 | 4.2 | 3.8 |
| 6013304003 | 16.94 | 30.19 | 30-35% | 3433 | Contra Costa | 9.2 | 72.1 | 18.7 | 12.1 | 80.3 | 1.8 | 0.5 | 2.5 | 2.8 |
| 6001432800 | 16.92 | 30.18 | 30-35% | 3729 | Alameda | 9.8 | 70.6 | 19.6 | 20.5 | 41.5 | 11.6 | 0.1 | 22.4 | 4 |
| 6097153401 | 16.92 | 30.17 | 30-35% | 6131 | Sonoma | 10.3 | 75.4 | 14.3 | 12.4 | 82.4 | 1 | 0.5 | 1.5 | 2.3 |
| 6075011000 | 16.92 | 30.16 | 30-35% | 4827 | San Francisco | 3.6 | 82.5 | 13.9 | 4.7 | 44.3 | 1.6 | 0.1 | 46.6 | 2.8 |
| 6065045108 | 16.91 | 30.14 | 30-35% | 5726 | Riverside | 13 | 64.8 | 22.2 | 46.6 | 46.3 | 2 | 0.4 | 2.9 | 1.8 |
| 6037901101 | 16.90 | 30.13 | 30-35% | 5496 | Los Angeles | 14.6 | 77.1 | 8.3 | 29.3 | 54 | 9.7 | 0.5 | 3.6 | 3 |

| | | | | | | | | | | | | | | | |
|---|---|---|---|---|---|---|---|---|---|---|---|---|---|---|---|
| 6001435102 | 16.90 | 30.12 | 30-35% | 5179 | Alameda | 7.7 | 83.1 | 9.2 | 15.3 | 36.3 | 17 | 0.1 | 25.2 | 6.1 |
| 6073003105 | 16.89 | 30.10 | 30-35% | 4167 | San Diego | 14.4 | 75.8 | 9.8 | 64.3 | 13.1 | 11.3 | 0.4 | 8.4 | 2.7 |
| 6037901209 | 16.89 | 30.09 | 30-35% | 1633 | Los Angeles | 9.1 | 75.7 | 15.2 | 22.4 | 69.5 | 3.1 | 0.7 | 1.8 | 2.6 |
| 6037910715 | 16.89 | 30.08 | 30-35% | 6702 | Los Angeles | 17.6 | 76.5 | 5.9 | 62.9 | 17.2 | 14.1 | 0.1 | 3.3 | 2.4 |
| 6071010902 | 16.88 | 30.07 | 30-35% | 3714 | San Bernardino | 11 | 74.4 | 14.6 | 21.5 | 73.8 | 0.6 | 0.3 | 1.3 | 2.5 |
| 6017031504 | 16.88 | 30.05 | 30-35% | 5337 | El Dorado | 10.7 | 68.7 | 20.6 | 10.7 | 83.8 | 0.4 | 1.2 | 1 | 2.8 |
| 6001441200 | 16.88 | 30.04 | 30-35% | 6816 | Alameda | 14.1 | 76 | 9.9 | 16.7 | 43 | 2.4 | 0.3 | 32.3 | 5.3 |
| 6097150602 | 16.87 | 30.03 | 30-35% | 4307 | Sonoma | 10.7 | 74.7 | 14.6 | 19.6 | 72.1 | 1.5 | 0.3 | 4.1 | 2.5 |
| 6071002017 | 16.86 | 30.02 | 30-35% | 5826 | San Bernardino | 9.1 | 80.4 | 10.5 | 22.4 | 61.6 | 3.8 | 0.2 | 9.3 | 2.7 |
| 6065045216 | 16.85 | 30.00 | 30-35% | 1804 | Riverside | 5 | 50.1 | 44.9 | 15.6 | 78 | 2.8 | 0.2 | 2.4 | 0.9 |
| 6095253403 | 16.85 | 29.99 | 25-30% | 4959 | Solano | 13.6 | 77.5 | 8.9 | 31.7 | 57.7 | 2.2 | 0.5 | 4.6 | 3.2 |
| 6015000203 | 16.84 | 29.98 | 25-30% | 1373 | Del Norte | 12.3 | 71.6 | 16.1 | 11.4 | 52 | 0.9 | 28.7 | 0.2 | 6.8 |
| 6073013801 | 16.84 | 29.97 | 25-30% | 4771 | San Diego | 14.3 | 73.4 | 12.3 | 31.9 | 48.8 | 9.5 | 0.3 | 5.1 | 4.4 |
| 6035040303 | 16.84 | 29.95 | 25-30% | 3616 | Lassen | 13 | 73.9 | 13.1 | 15.4 | 72.5 | 2.4 | 2.9 | 2.9 | 3.8 |
| 6037113235 | 16.83 | 29.94 | 25-30% | 1602 | Los Angeles | 9.2 | 79 | 11.8 | 13.3 | 74.8 | 3 | 0.6 | 3.9 | 4.4 |
| 6063000100 | 16.82 | 29.93 | 25-30% | 5500 | Plumas | 9.7 | 73.1 | 17.2 | 6.2 | 84.8 | 2.5 | 1.6 | 0.8 | 4.1 |
| 6067009609 | 16.81 | 29.92 | 25-30% | 5215 | Sacramento | 16.3 | 77.9 | 5.8 | 25.8 | 12.5 | 22.6 | 0.2 | 32.2 | 6.8 |
| 6053010607 | 16.81 | 29.90 | 25-30% | 4430 | Monterey | 23.7 | 72.7 | 3.6 | 96.4 | 1.5 | 0.5 | 0.2 | 1.2 | 0.3 |
| 6059042203 | 16.81 | 29.89 | 25-30% | 7015 | Orange | 9 | 67.2 | 23.8 | 12.2 | 80.3 | 0.6 | 0.2 | 3.8 | 2.9 |
| 6037481800 | 16.80 | 29.88 | 25-30% | 2596 | Los Angeles | 9.6 | 67.7 | 22.7 | 25 | 14.3 | 0.2 | 0 | 59 | 1.4 |
| 6089010603 | 16.80 | 29.87 | 25-30% | 1394 | Shasta | 9.5 | 70.3 | 20.2 | 2.7 | 89.8 | 0.3 | 2.7 | 0.9 | 3.7 |
| 6111007514 | 16.79 | 29.85 | 25-30% | 6528 | Ventura | 11.8 | 72.4 | 15.8 | 16.5 | 68.5 | 2.1 | 0.4 | 9.5 | 3 |
| 6061021403 | 16.79 | 29.84 | 25-30% | 7000 | Placer | 17.7 | 73 | 9.3 | 44.6 | 49.2 | 0.8 | 0.8 | 2.4 | 2.2 |
| 6061022600 | 16.78 | 29.83 | 25-30% | 4840 | Placer | 15.8 | 77.5 | 6.7 | 13 | 69.9 | 2.6 | 0.5 | 9.6 | 4.5 |
| 6001450742 | 16.78 | 29.81 | 25-30% | 4576 | Alameda | 12 | 73.5 | 14.5 | 10.4 | 65.5 | 1.3 | 0.2 | 19 | 3.7 |
| 6065030602 | 16.78 | 29.80 | 25-30% | 3285 | Riverside | 7.7 | 70.5 | 21.8 | 16.4 | 73.3 | 3.8 | 0.6 | 3.8 | 2.1 |
| 6055200505 | 16.77 | 29.79 | 25-30% | 2460 | Napa | 13 | 78.5 | 8.5 | 43.7 | 46.5 | 0.7 | 0.4 | 6.8 | 1.8 |
| 6073015403 | 16.77 | 29.78 | 25-30% | 2508 | San Diego | 7.6 | 70.5 | 21.9 | 9 | 82.7 | 1.2 | 0.3 | 3.5 | 3.3 |
| 6085504901 | 16.76 | 29.76 | 25-30% | 9530 | Santa Clara | 19.7 | 77 | 3.3 | 7.5 | 21.4 | 2.8 | 0.2 | 63.8 | 4.3 |
| 6067009328 | 16.76 | 29.75 | 25-30% | 5245 | Sacramento | 18.8 | 75.3 | 5.9 | 17.8 | 33.8 | 11.9 | 0.4 | 30.4 | 5.7 |
| 6013369002 | 16.75 | 29.74 | 25-30% | 2548 | Contra Costa | 12 | 77.8 | 10.2 | 28.1 | 32 | 18.3 | 0.3 | 15.4 | 5.9 |
| 6037463601 | 16.75 | 29.73 | 25-30% | 5714 | Los Angeles | 7.3 | 81.5 | 11.2 | 14.6 | 50.2 | 4.9 | 0.1 | 26.2 | 4 |
| 6085504314 | 16.75 | 29.71 | 25-30% | 4753 | Santa Clara | 12 | 76.7 | 11.3 | 15.3 | 14.8 | 2 | 0.2 | 64.4 | 3.4 |
| 6085503321 | 16.75 | 29.70 | 25-30% | 4658 | Santa Clara | 11.1 | 78.3 | 10.6 | 12.9 | 4.9 | 1.4 | 0.3 | 79 | 1.6 |
| 6037400205 | 16.75 | 29.69 | 25-30% | 3204 | Los Angeles | 9.1 | 76.9 | 14 | 14 | 56.1 | 5.9 | 0.3 | 20.7 | 2.9 |
| 6085506702 | 16.74 | 29.68 | 25-30% | 5455 | Santa Clara | 12.7 | 78 | 9.3 | 18.2 | 55.9 | 4.4 | 0.4 | 17.2 | 3.9 |
| 6065045118 | 16.73 | 29.66 | 25-30% | 2762 | Riverside | 13 | 61.4 | 25.6 | 44 | 50.3 | 1.6 | 0.1 | 3 | 1 |
| 6111005304 | 16.73 | 29.65 | 25-30% | 5325 | Ventura | 6 | 45.3 | 48.7 | 11.1 | 77.5 | 1.3 | 0.1 | 8.2 | 1.7 |
| 6037620101 | 16.73 | 29.64 | 25-30% | 5426 | Los Angeles | 10.7 | 79.5 | 9.8 | 16.2 | 69.4 | 2.1 | 0.2 | 8 | 4.1 |
| 6065041804 | 16.72 | 29.63 | 25-30% | 3989 | Riverside | 14.2 | 78.5 | 7.3 | 30.6 | 53.6 | 3.6 | 0.1 | 9.6 | 2.4 |
| 6037310300 | 16.72 | 29.61 | 25-30% | 2987 | Los Angeles | 10.4 | 70.1 | 19.5 | 10.8 | 69.6 | 0.7 | 0 | 15.5 | 3.4 |
| 6073008506 | 16.71 | 29.60 | 25-30% | 4042 | San Diego | 11 | 75.8 | 13.2 | 24.3 | 54.4 | 1.8 | 0.2 | 14.9 | 4.5 |
| 6059021918 | 16.70 | 29.59 | 25-30% | 5067 | Orange | 11.4 | 74.6 | 14 | 25.1 | 56.6 | 0.9 | 0.2 | 14.9 | 2.2 |
| 6085508508 | 16.70 | 29.57 | 25-30% | 5322 | Santa Clara | 15.7 | 73.4 | 10.9 | 26.2 | 27.4 | 1.8 | 0.3 | 40.7 | 3.6 |
| 6067008119 | 16.68 | 29.56 | 25-30% | 5668 | Sacramento | 12.6 | 74.7 | 12.7 | 14.6 | 75 | 2.9 | 0.9 | 2.5 | 4.2 |
| 6111007613 | 16.68 | 29.55 | 25-30% | 3896 | Ventura | 16.4 | 76.3 | 7.3 | 25.1 | 58.9 | 1.4 | 0.2 | 10.4 | 4 |
| 6067008702 | 16.68 | 29.54 | 25-30% | 3082 | Sacramento | 7.4 | 70.8 | 21.8 | 5.2 | 77 | 1.2 | 0.1 | 13.1 | 3.4 |
| 6075047902 | 16.68 | 29.52 | 25-30% | 3536 | San Francisco | 7.9 | 75.7 | 16.4 | 6.7 | 43.6 | 1.2 | 0.1 | 44.1 | 4.4 |
| 6001441924 | 16.67 | 29.51 | 25-30% | 7301 | Alameda | 17.7 | 74.6 | 7.7 | 13.7 | 22 | 3.1 | 0.4 | 55.9 | 4.9 |
| 6081613700 | 16.67 | 29.50 | 25-30% | 8755 | San Mateo | 12.8 | 70.7 | 16.5 | 33.5 | 59.8 | 0.6 | 0.2 | 4.1 | 1.9 |
| 6081602500 | 16.66 | 29.49 | 25-30% | 5092 | San Mateo | 9.9 | 72.8 | 17.3 | 9.4 | 16.9 | 4.5 | 0.1 | 65.5 | 3.6 |
| 6059052419 | 16.66 | 29.47 | 25-30% | 3456 | Orange | 18.1 | 75.3 | 6.6 | 7.3 | 52.7 | 0.6 | 0.1 | 35.1 | 4.1 |
| 6037214100 | 16.66 | 29.46 | 25-30% | 3944 | Los Angeles | 15.4 | 72.1 | 12.5 | 4.9 | 85.6 | 2.6 | 0 | 4.4 | 2.5 |
| 6067009323 | 16.65 | 29.45 | 25-30% | 5321 | Sacramento | 11.6 | 79.8 | 8.6 | 15.8 | 46.6 | 10.4 | 0.5 | 20.7 | 6 |
| 6037701302 | 16.65 | 29.44 | 25-30% | 4684 | Los Angeles | 6.8 | 80.6 | 12.6 | 7.1 | 81.3 | 1.5 | 0.2 | 6.9 | 3.1 |
| 6081600300 | 16.62 | 29.42 | 25-30% | 4027 | San Mateo | 10.9 | 74.6 | 14.5 | 20.6 | 19.2 | 2.9 | 0.2 | 53.4 | 3.7 |
| 6023010700 | 16.62 | 29.41 | 25-30% | 6940 | Humboldt | 9.9 | 73.1 | 17 | 7.4 | 81.4 | 0.9 | 3.1 | 3.1 | 4.1 |
| 6067007206 | 16.62 | 29.40 | 25-30% | 4131 | Sacramento | 12.4 | 76.3 | 11.3 | 15.7 | 73.2 | 2.2 | 0.8 | 4.8 | 3.3 |
| 6063000502 | 16.62 | 29.39 | 25-30% | 1811 | Plumas | 6.1 | 57.8 | 36.1 | 3.9 | 92.8 | 0.3 | 1.1 | 0.4 | 1.5 |
| 6073000600 | 16.62 | 29.37 | 25-30% | 3108 | San Diego | 3.9 | 84 | 12.1 | 16.4 | 69.3 | 3.6 | 0.5 | 6.8 | 3.5 |
| 6097152701 | 16.61 | 29.36 | 25-30% | 5271 | Sonoma | 11.2 | 72.3 | 16.5 | 20.5 | 72 | 0.6 | 1.2 | 2.9 | 2.8 |
| 6071010410 | 16.61 | 29.35 | 25-30% | 3105 | San Bernardino | 13 | 73.9 | 13.1 | 15.3 | 79.7 | 1.3 | 0.6 | 1.2 | 1.9 |
| 6059063601 | 16.61 | 29.34 | 25-30% | 3647 | Orange | 12.1 | 78.6 | 9.3 | 28.8 | 62.7 | 0.5 | 0.4 | 4 | 3.6 |
| 6075061500 | 16.59 | 29.32 | 25-30% | 11502 | San Francisco | 4.3 | 90.5 | 5.2 | 6.5 | 54.7 | 3.7 | 0.3 | 30.9 | 4 |
| 6037430721 | 16.58 | 29.31 | 25-30% | 3957 | Los Angeles | 9.3 | 72.5 | 18.2 | 23.6 | 26.6 | 1.5 | 0.2 | 46.5 | 1.6 |
| 6079011300 | 16.58 | 29.30 | 25-30% | 7745 | San Luis Obispo | 8.4 | 78.8 | 12.8 | 17.9 | 69.6 | 1 | 0.4 | 7.6 | 3.4 |

| | | | | | | | | | | | | | | | |
|---|---|---|---|---|---|---|---|---|---|---|---|---|---|---|---|
| 6073014700 | 16.57 | 29.28 | 25-30% | 7605 | San Diego | 12 | 76 | 12 | 20.3 | 62.4 | 5.8 | 0.5 | 6.6 | 4.4 |
| 6059110005 | 16.57 | 29.27 | 25-30% | 3124 | Orange | 10 | 69.7 | 20.3 | 14 | 72.9 | 1 | 0.1 | 8.8 | 3.2 |
| 6089010300 | 16.57 | 29.26 | 25-30% | 3833 | Shasta | 13.7 | 72.4 | 13.9 | 10.3 | 78.7 | 1.4 | 2.2 | 3.7 | 3.7 |
| 6059052425 | 16.56 | 29.25 | 25-30% | 5865 | Orange | 12.7 | 81.7 | 5.6 | 22.3 | 57 | 2 | 0.2 | 14.9 | 3.7 |
| 6059042108 | 16.56 | 29.23 | 25-30% | 5697 | Orange | 10.9 | 80.7 | 8.4 | 27.4 | 66.8 | 0.5 | 0.5 | 2.2 | 2.6 |
| 6037910805 | 16.54 | 29.22 | 25-30% | 4839 | Los Angeles | 8.4 | 79 | 12.6 | 19.4 | 73.7 | 2.3 | 0.6 | 1.5 | 2.6 |
| 6073019701 | 16.54 | 29.21 | 25-30% | 6022 | San Diego | 11.1 | 78.8 | 10.1 | 28.8 | 55.3 | 5.4 | 0.5 | 6.1 | 3.9 |
| 6075025401 | 16.54 | 29.20 | 25-30% | 3404 | San Francisco | 11.1 | 79.4 | 9.5 | 37.5 | 40.7 | 4.1 | 0.2 | 13.2 | 4.2 |
| 6073002100 | 16.54 | 29.18 | 25-30% | 5259 | San Diego | 11.9 | 83.2 | 4.9 | 36.7 | 39.3 | 11.7 | 0.4 | 8.5 | 3.6 |
| 6037194402 | 16.54 | 29.17 | 25-30% | 3335 | Los Angeles | 3.3 | 86.5 | 10.2 | 8.8 | 79.6 | 2.2 | 0.1 | 6.4 | 2.9 |
| 6001440305 | 16.53 | 29.16 | 25-30% | 3883 | Alameda | 11.6 | 73.8 | 14.6 | 16.2 | 15.5 | 7.8 | 0.1 | 54.8 | 5.6 |
| 6037463000 | 16.53 | 29.15 | 25-30% | 2228 | Los Angeles | 10.4 | 71.4 | 18.2 | 17.5 | 52.1 | 5.3 | 0 | 21.9 | 3.2 |
| 6059052424 | 16.52 | 29.13 | 25-30% | 5015 | Orange | 13 | 78.9 | 8.1 | 23.4 | 58 | 2 | 0.5 | 13.1 | 3 |
| 6071009715 | 16.52 | 29.12 | 25-30% | 8260 | San Bernardino | 11.8 | 70.1 | 18.1 | 22.8 | 63.3 | 7 | 0.6 | 3.3 | 3 |
| 6013340001 | 16.52 | 29.11 | 25-30% | 5857 | Contra Costa | 12.7 | 74.6 | 12.7 | 15.1 | 65.9 | 2.2 | 0.3 | 12.3 | 4.2 |
| 6013355108 | 16.52 | 29.10 | 25-30% | 12847 | Contra Costa | 14.2 | 78.7 | 7.1 | 23.9 | 25.4 | 23.6 | 0.3 | 20.5 | 6.4 |
| 6113010701 | 16.51 | 29.08 | 25-30% | 4625 | Yolo | 4.1 | 88.4 | 7.5 | 10.8 | 68.3 | 1.6 | 0.2 | 15.2 | 3.9 |
| 6073001400 | 16.51 | 29.07 | 25-30% | 3084 | San Diego | 8.7 | 83.8 | 7.5 | 22.8 | 63.2 | 4.4 | 0.5 | 5.8 | 3.3 |
| 6059062621 | 16.51 | 29.06 | 25-30% | 4800 | Orange | 10.9 | 72.5 | 16.6 | 19.4 | 62.7 | 1.5 | 0.3 | 12.4 | 3.7 |
| 6073009509 | 16.51 | 29.05 | 25-30% | 4136 | San Diego | 6.9 | 83.8 | 9.3 | 14.4 | 63.6 | 6.2 | 0.3 | 10.9 | 4.6 |
| 6037403325 | 16.50 | 29.03 | 25-30% | 4795 | Los Angeles | 10.1 | 79.2 | 10.7 | 17.6 | 24.3 | 3.1 | 0.3 | 51.6 | 3.1 |
| 6033001200 | 16.50 | 29.02 | 25-30% | 3198 | Lake | 10.4 | 71.7 | 17.9 | 12.4 | 81.5 | 1.2 | 0.6 | 0.7 | 3.6 |
| 6073016701 | 16.49 | 29.01 | 25-30% | 8666 | San Diego | 13.5 | 77.4 | 9.1 | 17.8 | 72 | 2.5 | 0.5 | 3.3 | 3.9 |
| 6029002808 | 16.48 | 28.99 | 25-30% | 7257 | Kern | 10.8 | 76.6 | 12.6 | 23.6 | 57.4 | 5.6 | 0.6 | 10.2 | 2.7 |
| 6037297000 | 16.47 | 28.98 | 25-30% | 5343 | Los Angeles | 11.7 | 73 | 15.3 | 28.7 | 60.9 | 2.8 | 0.3 | 3.9 | 3.4 |
| 6037910711 | 16.47 | 28.97 | 25-30% | 7585 | Los Angeles | 16.2 | 75.5 | 8.3 | 60.7 | 20.6 | 13.8 | 0.3 | 2.5 | 2.1 |
| 6111006500 | 16.47 | 28.96 | 25-30% | 3744 | Ventura | 13.4 | 79.2 | 7.4 | 47.4 | 46.7 | 0.9 | 0.2 | 3.1 | 1.6 |
| 6073015200 | 16.46 | 28.94 | 25-30% | 3879 | San Diego | 9.1 | 68.8 | 22.1 | 11.6 | 81.1 | 2.2 | 0.3 | 2.6 | 2.3 |
| 6037910001 | 16.45 | 28.93 | 25-30% | 5742 | Los Angeles | 15.8 | 76.8 | 7.4 | 67.3 | 21.1 | 9.2 | 0.3 | 0.7 | 1.4 |
| 6059052527 | 16.45 | 28.92 | 25-30% | 8391 | Orange | 12 | 77.6 | 10.4 | 9.6 | 39 | 2 | 0.1 | 44.2 | 5.1 |
| 6001441100 | 16.44 | 28.91 | 25-30% | 4308 | Alameda | 10.9 | 71.3 | 17.8 | 16.9 | 48.8 | 3.2 | 0.5 | 25.8 | 4.8 |
| 6085509102 | 16.44 | 28.89 | 25-30% | 4798 | Santa Clara | 12.4 | 81.5 | 6.1 | 10.5 | 31.3 | 2.4 | 0.1 | 52 | 3.7 |
| 6067009307 | 16.43 | 28.88 | 25-30% | 5241 | Sacramento | 12.1 | 76.6 | 11.3 | 16.1 | 59.8 | 5.7 | 0.8 | 12.8 | 4.8 |
| 6085504307 | 16.43 | 28.87 | 25-30% | 5563 | Santa Clara | 13.2 | 74.2 | 12.6 | 15.3 | 15.1 | 2.5 | 0 | 63.9 | 3.2 |
| 6045010802 | 16.43 | 28.86 | 25-30% | 1785 | Mendocino | 12.1 | 72.2 | 15.7 | 21.6 | 74.5 | 0.2 | 1.3 | 0.4 | 1.9 |
| 6059052521 | 16.42 | 28.84 | 25-30% | 5391 | Orange | 10.5 | 83.2 | 6.3 | 13.6 | 37.5 | 3.7 | 0.1 | 37.8 | 7.3 |
| 6075015500 | 16.42 | 28.83 | 25-30% | 3622 | San Francisco | 4 | 60.8 | 35.2 | 9.6 | 44.6 | 9.6 | 0.2 | 32.1 | 4 |
| 6073019902 | 16.42 | 28.82 | 25-30% | 4078 | San Diego | 14.5 | 77.1 | 8.4 | 48.8 | 42.4 | 2.3 | 0.3 | 3.3 | 3 |
| 6101050603 | 16.42 | 28.81 | 25-30% | 4528 | Sutter | 10.5 | 67.2 | 22.3 | 12.4 | 67 | 1.8 | 0.7 | 14.7 | 3.5 |
| 6037574500 | 16.42 | 28.79 | 25-30% | 6357 | Los Angeles | 11.5 | 72.3 | 16.2 | 17 | 66.2 | 3.6 | 0.4 | 8.9 | 4 |
| 6001408200 | 16.42 | 28.78 | 25-30% | 4054 | Alameda | 13.5 | 77.7 | 8.8 | 20.2 | 16.9 | 52.9 | 0.2 | 5.3 | 4.5 |
| 6065043823 | 16.39 | 28.77 | 25-30% | 7023 | Riverside | 19.2 | 75.8 | 5 | 33.7 | 43.8 | 7.3 | 1 | 11 | 3.1 |
| 6037106643 | 16.39 | 28.76 | 25-30% | 4320 | Los Angeles | 8.8 | 77.9 | 13.3 | 13.5 | 62.6 | 2.9 | 0.1 | 18.1 | 2.8 |
| 6073008901 | 16.38 | 28.74 | 25-30% | 4805 | San Diego | 7.8 | 80.9 | 11.3 | 26.2 | 52.3 | 4.1 | 0.4 | 13.1 | 3.9 |
| 6037911001 | 16.38 | 28.73 | 25-30% | 4201 | Los Angeles | 9.2 | 73.1 | 17.7 | 26.2 | 64.7 | 3.7 | 0.5 | 2.7 | 2.3 |
| 6081601603 | 16.37 | 28.72 | 25-30% | 5800 | San Mateo | 8.9 | 75.4 | 15.7 | 11.4 | 13.1 | 2.5 | 0 | 69 | 3.9 |
| 6073013504 | 16.36 | 28.70 | 25-30% | 3471 | San Diego | 13.9 | 74.7 | 11.4 | 22.7 | 48.8 | 11.9 | 0.2 | 12 | 4.4 |
| 6035040304 | 16.36 | 28.69 | 25-30% | 1939 | Lassen | 13.8 | 71.6 | 14.6 | 13.4 | 75.5 | 0.8 | 2.3 | 3.2 | 4.8 |
| 6085502201 | 16.35 | 28.68 | 25-30% | 6260 | Santa Clara | 14.3 | 77.1 | 8.6 | 34.6 | 34.6 | 7.7 | 0.3 | 19.6 | 3.2 |
| 6075040100 | 16.35 | 28.67 | 25-30% | 4088 | San Francisco | 7.7 | 77.1 | 15.2 | 7.9 | 52.5 | 1.6 | 0.1 | 34.5 | 3.4 |
| 6073017015 | 16.35 | 28.65 | 25-30% | 7295 | San Diego | 11.5 | 70.3 | 18.2 | 9.8 | 68.7 | 2.7 | 0.1 | 14.8 | 3.9 |
| 6037115101 | 16.35 | 28.64 | 25-30% | 5046 | Los Angeles | 7.8 | 71.1 | 21.1 | 17.8 | 64.8 | 3.9 | 0.2 | 10.7 | 2.6 |
| 6075033203 | 16.34 | 28.63 | 25-30% | 3472 | San Francisco | 6 | 82.1 | 11.9 | 14.2 | 45 | 6.3 | 0.3 | 28.5 | 5.7 |
| 6001450607 | 16.34 | 28.62 | 25-30% | 5251 | Alameda | 12.9 | 71.8 | 15.3 | 19.6 | 55.2 | 1.9 | 0.2 | 19.2 | 3.8 |
| 6037271400 | 16.33 | 28.60 | 25-30% | 3391 | Los Angeles | 12.8 | 67.5 | 19.7 | 13.2 | 69.7 | 0.9 | 0.1 | 11.9 | 4.3 |
| 6095252802 | 16.32 | 28.59 | 25-30% | 1359 | Solano | 9.2 | 90.8 | 0 | 16.5 | 54 | 12.7 | 1 | 8.2 | 7.6 |
| 6073019001 | 16.31 | 28.58 | 25-30% | 5946 | San Diego | 8.2 | 68.1 | 23.7 | 20.5 | 74.4 | 0.5 | 0.2 | 2.6 | 1.7 |
| 6009000121 | 16.31 | 28.57 | 25-30% | 4463 | Calaveras | 10.6 | 67.2 | 22.2 | 12 | 82.9 | 0.3 | 1.1 | 1.4 | 2.3 |
| 6081602600 | 16.31 | 28.55 | 25-30% | 8167 | San Mateo | 11.5 | 76.8 | 11.7 | 10.8 | 11.2 | 3.5 | 0.1 | 70.1 | 4.2 |
| 6059110109 | 16.31 | 28.54 | 25-30% | 5045 | Orange | 10.1 | 77.5 | 12.4 | 16.9 | 39.5 | 2.4 | 0.5 | 37.4 | 3.2 |
| 6029003204 | 16.30 | 28.53 | 25-30% | 9386 | Kern | 16.4 | 76.9 | 6.7 | 27.4 | 48.5 | 4.2 | 0.7 | 16.2 | 3.1 |
| 6073004400 | 16.29 | 28.52 | 25-30% | 3866 | San Diego | 9.7 | 82.2 | 8.1 | 29.3 | 60.7 | 3 | 0.4 | 2.8 | 3.6 |
| 6085512029 | 16.29 | 28.50 | 25-30% | 6892 | Santa Clara | 13.2 | 76.3 | 10.5 | 32.1 | 43.8 | 3.4 | 0.4 | 16.4 | 3.9 |
| 6037460401 | 16.29 | 28.49 | 25-30% | 878 | Los Angeles | 12.6 | 71.1 | 16.3 | 28.4 | 15.3 | 40 | 0.3 | 10.7 | 5.4 |
| 6037293301 | 16.28 | 28.48 | 25-30% | 2805 | Los Angeles | 9.3 | 70.6 | 20.1 | 20.6 | 28 | 7.5 | 0.1 | 40.4 | 3.4 |
| 6111001001 | 16.28 | 28.47 | 25-30% | 2488 | Ventura | 9.8 | 75.2 | 15 | 19.9 | 75.4 | 0.4 | 1.1 | 1.2 | 1.9 |

| | | | | | | | | | | | | | | |
|---|---|---|---|---|---|---|---|---|---|---|---|---|---|---|
| 6085511915 | 16.26 | 28.45 | 25-30% | 3806 | Santa Clara | 18.2 | 70.5 | 11.3 | 50.4 | 32.2 | 2.3 | 0.3 | 11.2 | 3.6 |
| 6083003102 | 16.26 | 28.44 | 25-30% | 3306 | Santa Barbara | 11.6 | 72.3 | 16.1 | 31 | 57.5 | 3.2 | 0.7 | 4 | 3.6 |
| 6065044402 | 16.25 | 28.43 | 25-30% | 6218 | Riverside | 9 | 72.4 | 18.6 | 19.1 | 74.3 | 1.4 | 1.4 | 1.4 | 2.6 |
| 6073017049 | 16.25 | 28.41 | 25-30% | 2919 | San Diego | 13.3 | 77.3 | 9.4 | 19.2 | 63.2 | 1.8 | 0.3 | 11.1 | 4.4 |
| 6059052511 | 16.24 | 28.40 | 25-30% | 5672 | Orange | 10.3 | 73.4 | 16.3 | 6.8 | 62.9 | 1 | 0.1 | 24.8 | 4.5 |
| 6037265100 | 16.24 | 28.39 | 25-30% | 2489 | Los Angeles | 8.9 | 55.7 | 35.4 | 4.7 | 86 | 1.2 | 0 | 4.5 | 3.7 |
| 6053013500 | 16.24 | 28.38 | 25-30% | 4920 | Monterey | 12.1 | 73.4 | 14.5 | 32.2 | 34.9 | 13.6 | 0.4 | 12.8 | 6.1 |
| 6007001702 | 16.23 | 28.36 | 25-30% | 5739 | Butte | 9.5 | 65.5 | 25 | 6.7 | 87.8 | 0.4 | 1 | 0.8 | 3.2 |
| 6073019208 | 16.22 | 28.35 | 25-30% | 3305 | San Diego | 10.1 | 74.7 | 15.2 | 21.7 | 71.3 | 1.1 | 0.3 | 3.2 | 2.5 |
| 6023000500 | 16.22 | 28.34 | 25-30% | 4263 | Humboldt | 9.4 | 79.3 | 11.3 | 11.3 | 73.4 | 2.4 | 4.5 | 4 | 4.3 |
| 6111007614 | 16.20 | 28.33 | 25-30% | 7476 | Ventura | 12.8 | 79.5 | 7.7 | 32.3 | 56.4 | 1.5 | 0.2 | 6.9 | 2.7 |
| 6067007702 | 16.20 | 28.31 | 25-30% | 4306 | Sacramento | 9.5 | 65.6 | 24.9 | 9 | 78.7 | 2.6 | 0.4 | 5.6 | 3.7 |
| 6059021807 | 16.18 | 28.30 | 25-30% | 4131 | Orange | 12.5 | 79.8 | 7.7 | 25.9 | 58.9 | 2.2 | 0.3 | 10.5 | 2.2 |
| 6059021820 | 16.18 | 28.29 | 25-30% | 4258 | Orange | 12.1 | 76.1 | 11.8 | 14.9 | 58.5 | 1.2 | 0.4 | 22.7 | 2.4 |
| 6045010200 | 16.18 | 28.28 | 25-30% | 4155 | Mendocino | 10.4 | 75.3 | 14.3 | 8.8 | 77.8 | 0.6 | 7 | 0.9 | 4.9 |
| 6093000300 | 16.18 | 28.26 | 25-30% | 4105 | Siskiyou | 10.9 | 67.8 | 21.3 | 6.8 | 84.8 | 0.6 | 3 | 0.5 | 4.3 |
| 6093000200 | 16.18 | 28.25 | 25-30% | 1955 | Siskiyou | 13.1 | 70.9 | 16 | 24.9 | 67.8 | 0.8 | 1.9 | 0.9 | 3.7 |
| 6073014102 | 16.17 | 28.24 | 25-30% | 3768 | San Diego | 14.4 | 74.6 | 11 | 39.2 | 13 | 31.2 | 0.1 | 12 | 4.5 |
| 6111000100 | 16.17 | 28.23 | 25-30% | 819 | Ventura | 7.6 | 75.1 | 17.3 | 15 | 81 | 0.1 | 0.1 | 1.5 | 2.3 |
| 6019005909 | 16.17 | 28.21 | 25-30% | 4627 | Fresno | 19.7 | 74.4 | 5.9 | 25.2 | 46.3 | 2.3 | 0.3 | 23.1 | 2.9 |
| 6037300501 | 16.16 | 28.20 | 25-30% | 3868 | Los Angeles | 9.3 | 81.8 | 8.9 | 13 | 50.3 | 0.5 | 0.2 | 33.6 | 2.4 |
| 6111001601 | 16.16 | 28.19 | 25-30% | 1099 | Ventura | 12.2 | 76.7 | 11.1 | 34.1 | 53.2 | 1.4 | 0.5 | 8.3 | 2.5 |
| 6019005504 | 16.15 | 28.18 | 25-30% | 2295 | Fresno | 16.3 | 76 | 7.7 | 19.7 | 62 | 1.8 | 0.4 | 13.5 | 2.7 |
| 6073020022 | 16.15 | 28.16 | 25-30% | 7404 | San Diego | 15 | 76.5 | 8.5 | 32 | 55.5 | 1.8 | 0.3 | 7.3 | 3 |
| 6067007107 | 16.15 | 28.15 | 25-30% | 3372 | Sacramento | 16.3 | 78.3 | 5.4 | 13.2 | 41.8 | 11.4 | 0.1 | 26.7 | 6.7 |
| 6001444301 | 16.14 | 28.14 | 25-30% | 3855 | Alameda | 15.2 | 74.7 | 10.1 | 33.8 | 30.3 | 4.6 | 0.1 | 26 | 5.3 |
| 6067009612 | 16.14 | 28.12 | 25-30% | 5073 | Sacramento | 15.1 | 78.2 | 6.7 | 23.2 | 38 | 12.7 | 0.3 | 19.3 | 6.5 |
| 6111000303 | 16.13 | 28.11 | 25-30% | 5103 | Ventura | 16.6 | 74.2 | 9.2 | 70.3 | 26.6 | 0.3 | 0.3 | 1.3 | 1.3 |
| 6073012302 | 16.13 | 28.10 | 25-30% | 1586 | San Diego | 11.4 | 66.3 | 22.3 | 63.2 | 23 | 3.7 | 0.3 | 7.1 | 2.7 |
| 6067008208 | 16.13 | 28.09 | 25-30% | 4598 | Sacramento | 12.7 | 76 | 11.3 | 11.3 | 77.3 | 2.7 | 0.8 | 3.7 | 4.2 |
| 6059063802 | 16.13 | 28.07 | 25-30% | 2914 | Orange | 12.2 | 70.6 | 17.2 | 18.2 | 73.1 | 0.7 | 0.4 | 4.7 | 3 |
| 6065040806 | 16.13 | 28.06 | 25-30% | 2995 | Riverside | 14.2 | 78.4 | 7.4 | 30.8 | 58 | 3.4 | 0.9 | 4.8 | 2.1 |
| 6037430701 | 16.12 | 28.05 | 25-30% | 5271 | Los Angeles | 9.9 | 73.3 | 16.8 | 14.6 | 35.9 | 1.3 | 0.2 | 45.2 | 2.8 |
| 6001441921 | 16.12 | 28.04 | 25-30% | 3663 | Alameda | 12.8 | 80.8 | 6.4 | 27 | 26.9 | 3.8 | 0.3 | 37.7 | 4.3 |
| 6111004305 | 16.12 | 28.02 | 25-30% | 2388 | Ventura | 21.2 | 78.3 | 0.5 | 16.7 | 57.9 | 9.7 | 0.9 | 9.5 | 5.3 |
| 6037211000 | 16.11 | 28.01 | 25-30% | 4431 | Los Angeles | 13.2 | 71.8 | 15 | 6.7 | 61.4 | 4.5 | 0 | 23.8 | 3.5 |
| 6073000500 | 16.10 | 28.00 | 25-30% | 2722 | San Diego | 5.1 | 84.8 | 10.1 | 14.5 | 74.5 | 2.6 | 0.4 | 4.8 | 3.3 |
| 6037571300 | 16.10 | 27.99 | 25-30% | 4414 | Los Angeles | 11.1 | 73.1 | 15.8 | 26.5 | 48.9 | 7.6 | 0.5 | 12.7 | 3.8 |
| 6037901008 | 16.10 | 27.97 | 25-30% | 2874 | Los Angeles | 14.7 | 78.2 | 7.1 | 35.9 | 35.9 | 16.2 | 0.6 | 8.2 | 3.2 |
| 6079012102 | 16.09 | 27.96 | 25-30% | 5957 | San Luis Obispo | 12.4 | 75.9 | 11.7 | 28.8 | 62.9 | 0.8 | 0.6 | 3.7 | 3.2 |
| 6065043278 | 16.09 | 27.95 | 25-30% | 5946 | Riverside | 15.7 | 78.3 | 6 | 18 | 64.8 | 4.3 | 0.2 | 9.2 | 3.4 |
| 6085512312 | 16.08 | 27.94 | 25-30% | 2899 | Santa Clara | 13.9 | 80.1 | 6 | 32.2 | 54.9 | 1.6 | 0.3 | 7.8 | 3.2 |
| 6095252103 | 16.08 | 27.92 | 25-30% | 5180 | Solano | 11 | 76.6 | 12.4 | 14.8 | 20.8 | 20.3 | 0.3 | 38.5 | 5.2 |
| 6075022704 | 16.08 | 27.91 | 25-30% | 3122 | San Francisco | 8.7 | 81.1 | 10.2 | 8 | 72.1 | 1.3 | 0.3 | 13.4 | 4.9 |
| 6111007904 | 16.07 | 27.90 | 25-30% | 5831 | Ventura | 11.7 | 77.2 | 11.1 | 28.7 | 59 | 1.4 | 0.6 | 7.2 | 3.1 |
| 6073019205 | 16.06 | 27.88 | 25-30% | 6163 | San Diego | 12.8 | 69 | 18.2 | 52.2 | 38.1 | 2.8 | 0.2 | 4.6 | 2.2 |
| 6079012702 | 16.06 | 27.87 | 25-30% | 6550 | San Luis Obispo | 10.4 | 74.9 | 14.7 | 13.2 | 81.5 | 0.5 | 0.8 | 1.7 | 2.3 |
| 6001443321 | 16.06 | 27.86 | 25-30% | 3142 | Alameda | 17.8 | 76.6 | 5.6 | 7.6 | 15.2 | 2.9 | 0.2 | 71.2 | 2.9 |
| 6001406900 | 16.05 | 27.85 | 25-30% | 3719 | Alameda | 13 | 75.7 | 11.3 | 12.7 | 35.8 | 21.8 | 0.4 | 22.9 | 6.4 |
| 6023011200 | 16.04 | 27.83 | 25-30% | 3220 | Humboldt | 10.8 | 70.6 | 18.6 | 8.8 | 85.8 | 0.1 | 1.1 | 1 | 3.3 |
| 6097153600 | 16.03 | 27.82 | 25-30% | 5327 | Sonoma | 7.8 | 75.4 | 16.8 | 14.2 | 81 | 0.4 | 0.6 | 1.6 | 2.1 |
| 6013321101 | 16.02 | 27.81 | 25-30% | 6549 | Contra Costa | 9.4 | 73.4 | 17.2 | 15.1 | 67.5 | 4.9 | 0.2 | 8.2 | 4.2 |
| 6075047801 | 16.02 | 27.80 | 25-30% | 4005 | San Francisco | 7.3 | 74.9 | 17.8 | 5.6 | 35.4 | 1.1 | 0 | 54.3 | 3.5 |
| 6037300301 | 16.02 | 27.78 | 25-30% | 6140 | Los Angeles | 9.6 | 76.5 | 13.9 | 8.8 | 60.9 | 0.6 | 0.1 | 26.3 | 3.3 |
| 6067009635 | 16.01 | 27.77 | 25-30% | 5941 | Sacramento | 19.3 | 75.6 | 5.1 | 16.1 | 30.1 | 10.6 | 0.1 | 36.1 | 7 |
| 6037920329 | 16.00 | 27.76 | 25-30% | 5460 | Los Angeles | 11.6 | 79.8 | 8.6 | 18 | 68.8 | 2 | 0.3 | 7.8 | 3 |
| 6085506103 | 16.00 | 27.75 | 25-30% | 4699 | Santa Clara | 15.8 | 71.3 | 12.9 | 10 | 40.3 | 1.7 | 0.1 | 44.4 | 3.5 |
| 6067000300 | 16.00 | 27.73 | 25-30% | 3103 | Sacramento | 11.9 | 74.4 | 13.7 | 11.1 | 79.7 | 1.1 | 0.3 | 3.8 | 4 |
| 6087100500 | 15.99 | 27.72 | 25-30% | 5370 | Santa Cruz | 7.4 | 82.8 | 9.8 | 12.1 | 69.1 | 1.5 | 0.3 | 12.6 | 4.4 |
| 6037408705 | 15.99 | 27.71 | 25-30% | 5427 | Los Angeles | 8.8 | 78.4 | 12.8 | 23.3 | 13.9 | 1.2 | 0.2 | 60 | 1.5 |
| 6037264301 | 15.99 | 27.70 | 25-30% | 4646 | Los Angeles | 3.8 | 86.2 | 10 | 6.8 | 75.9 | 1.4 | 0.1 | 12.4 | 3.4 |
| 6001451602 | 15.98 | 27.68 | 25-30% | 6224 | Alameda | 10.6 | 68 | 21.4 | 15.6 | 73.9 | 1.6 | 0.2 | 5.8 | 2.9 |
| 6081603900 | 15.98 | 27.67 | 25-30% | 5284 | San Mateo | 11 | 76 | 13 | 23.1 | 52.3 | 1.5 | 0.2 | 18.9 | 3.9 |
| 6029000503 | 15.97 | 27.66 | 25-30% | 6347 | Kern | 14.8 | 76.3 | 8.9 | 17.3 | 74.8 | 0.8 | 0.6 | 3.9 | 2.6 |
| 6037214600 | 15.97 | 27.65 | 25-30% | 2411 | Los Angeles | 6.9 | 76.8 | 16.3 | 7.3 | 78.2 | 3.8 | 0.1 | 8.1 | 2.6 |
| 6059052422 | 15.96 | 27.63 | 25-30% | 4165 | Orange | 12.4 | 80.3 | 7.3 | 15.2 | 62.1 | 2.1 | 0.1 | 16.2 | 4.2 |

| | | | | | | | | | | | | | | |
|---|---|---|---|---|---|---|---|---|---|---|---|---|---|---|
| 6029005801 | 15.94 | 27.62 | 25-30% | 5997 | Kern | 14.9 | 79.6 | 5.5 | 28.4 | 52.3 | 9.5 | 0.5 | 5.3 | 4 |
| 6059021826 | 15.93 | 27.61 | 25-30% | 2682 | Orange | 14.2 | 80.9 | 4.9 | 16.8 | 63.5 | 1.2 | 0.1 | 14.1 | 4.3 |
| 6065042732 | 15.93 | 27.59 | 25-30% | 5993 | Riverside | 17.1 | 77 | 5.9 | 36.3 | 51.1 | 4.6 | 0.2 | 4.7 | 3.1 |
| 6017030302 | 15.93 | 27.58 | 25-30% | 2867 | El Dorado | 11.4 | 79.7 | 8.9 | 24.5 | 66.9 | 0.8 | 0.6 | 4.5 | 2.8 |
| 6073013420 | 15.92 | 27.57 | 25-30% | 3471 | San Diego | 14.8 | 79.4 | 5.8 | 50.7 | 19.2 | 5.7 | 0.2 | 20.5 | 3.7 |
| 6111001602 | 15.91 | 27.56 | 25-30% | 2388 | Ventura | 10.3 | 67.8 | 21.9 | 23.6 | 69.6 | 1 | 0.3 | 2.7 | 2.8 |
| 6001422800 | 15.91 | 27.54 | 25-30% | 8368 | Alameda | 0.3 | 98.9 | 0.8 | 12.9 | 32.2 | 3.9 | 0.3 | 44.6 | 6.1 |
| 6029003806 | 15.90 | 27.53 | 25-30% | 4889 | Kern | 15.4 | 76.4 | 8.2 | 22 | 60.8 | 2.7 | 0.4 | 11.6 | 2.4 |
| 6059001505 | 15.90 | 27.52 | 25-30% | 6876 | Orange | 11.5 | 75.5 | 13 | 20.8 | 56.4 | 1.4 | 0.2 | 18.7 | 2.5 |
| 6081604900 | 15.90 | 27.51 | 25-30% | 3243 | San Mateo | 8.9 | 67.3 | 23.8 | 5 | 40.3 | 0.6 | 0.1 | 50.9 | 3.1 |
| 6087101200 | 15.89 | 27.49 | 25-30% | 3132 | Santa Cruz | 7.5 | 77.8 | 14.7 | 13.2 | 76.8 | 1.4 | 0.4 | 5.1 | 3 |
| 6059062614 | 15.88 | 27.48 | 25-30% | 14044 | Orange | 5 | 93.1 | 1.9 | 12.2 | 36.9 | 1.6 | 0.1 | 43.8 | 5.3 |
| 6079011200 | 15.86 | 27.47 | 25-30% | 7355 | San Luis Obispo | 5.2 | 80.4 | 14.4 | 10.2 | 80.6 | 0.8 | 0.3 | 5 | 3.2 |
| 6037265410 | 15.86 | 27.46 | 25-30% | 1576 | Los Angeles | 13.2 | 72 | 14.8 | 6.4 | 77.2 | 5.5 | 0.3 | 6.9 | 3.7 |
| 6037910205 | 15.85 | 27.44 | 25-30% | 1371 | Los Angeles | 11.5 | 76.5 | 12 | 31.5 | 49.9 | 8.5 | 0.1 | 7.4 | 2.6 |
| 6065044509 | 15.85 | 27.43 | 25-30% | 3939 | Riverside | 17.9 | 75.1 | 7 | 56.9 | 29.7 | 8.2 | 0.6 | 2.3 | 2.3 |
| 6037620701 | 15.84 | 27.42 | 25-30% | 6704 | Los Angeles | 12.8 | 77.7 | 9.5 | 14.8 | 64.3 | 2.3 | 0.4 | 12.8 | 5.5 |
| 6089012603 | 15.84 | 27.41 | 25-30% | 4134 | Shasta | 7 | 68.3 | 24.7 | 5.2 | 88.7 | 0.2 | 1.9 | 0.8 | 3.2 |
| 6079010204 | 15.84 | 27.39 | 25-30% | 5731 | San Luis Obispo | 15.9 | 69.8 | 14.3 | 30.3 | 62.5 | 1.9 | 0.4 | 2.9 | 2 |
| 6001420500 | 15.83 | 27.38 | 25-30% | 2308 | Alameda | 12.6 | 76.4 | 11 | 11.2 | 52.1 | 4.2 | 0.1 | 27.2 | 5.2 |
| 6013324002 | 15.83 | 27.37 | 25-30% | 5141 | Contra Costa | 9.6 | 76.1 | 14.3 | 16.8 | 60.9 | 3.6 | 0.1 | 14.7 | 3.9 |
| 6035040100 | 15.82 | 27.36 | 25-30% | 1822 | Lassen | 9.4 | 71 | 19.6 | 12.4 | 81.1 | 1.5 | 1.8 | 0.7 | 2.5 |
| 6065043811 | 15.81 | 27.34 | 25-30% | 3877 | Riverside | 7.8 | 68.3 | 23.9 | 21.2 | 71.4 | 1.2 | 1.6 | 2.4 | 2.2 |
| 6037143400 | 15.81 | 27.33 | 25-30% | 5881 | Los Angeles | 9.9 | 77 | 13.1 | 10.1 | 77.1 | 3.7 | 0.1 | 5.2 | 3.7 |
| 6055201602 | 15.80 | 27.32 | 25-30% | 3527 | Napa | 10.8 | 69.4 | 19.8 | 23.1 | 73.3 | 0.3 | 0.1 | 1.9 | 1.4 |
| 6111006302 | 15.80 | 27.30 | 25-30% | 3597 | Ventura | 7.1 | 80.7 | 12.2 | 13.5 | 74 | 2.4 | 0.3 | 6.8 | 3.1 |
| 6075011901 | 15.79 | 27.29 | 25-30% | 2408 | San Francisco | 1.6 | 83.3 | 15.1 | 9.1 | 56.1 | 3.9 | 0.5 | 26.2 | 4.2 |
| 6085505800 | 15.79 | 27.28 | 25-30% | 3741 | Santa Clara | 13.6 | 74 | 12.4 | 22.8 | 60.6 | 1 | 0.3 | 11.6 | 3.8 |
| 6073001200 | 15.78 | 27.27 | 25-30% | 5660 | San Diego | 8.8 | 84.7 | 6.5 | 33.6 | 42.4 | 12.9 | 0.5 | 6.1 | 4.6 |
| 6037910713 | 15.78 | 27.25 | 25-30% | 5324 | Los Angeles | 16.9 | 77.7 | 5.4 | 62.4 | 15.7 | 16 | 0.3 | 3.5 | 2.1 |
| 6067005803 | 15.78 | 27.24 | 25-30% | 3545 | Sacramento | 8.1 | 63.7 | 28.2 | 5.1 | 83.1 | 1.2 | 0.5 | 7.6 | 2.4 |
| 6019005505 | 15.78 | 27.23 | 25-30% | 6613 | Fresno | 17 | 74.8 | 8.2 | 19.9 | 56.1 | 3.4 | 0.4 | 16.5 | 3.6 |
| 6037430400 | 15.78 | 27.22 | 25-30% | 4424 | Los Angeles | 10.8 | 73.7 | 15.5 | 9.7 | 36.3 | 0.7 | 0.1 | 50.6 | 2.5 |
| 6037265602 | 15.77 | 27.20 | 25-30% | 3042 | Los Angeles | 8.3 | 61.9 | 29.8 | 4.3 | 80 | 1.3 | 0 | 9.6 | 4.7 |
| 6071010419 | 15.77 | 27.19 | 25-30% | 4921 | San Bernardino | 12 | 71.1 | 16.9 | 16.6 | 75.6 | 2.5 | 0.7 | 1.5 | 3 |
| 6037503601 | 15.77 | 27.18 | 25-30% | 4168 | Los Angeles | 12 | 70.6 | 17.4 | 46.6 | 42.1 | 3.5 | 0.4 | 5.4 | 2 |
| 6001403502 | 15.76 | 27.17 | 25-30% | 1991 | Alameda | 6 | 87.7 | 6.3 | 12.2 | 44.2 | 26.6 | 0.4 | 10.9 | 5.7 |
| 6033000701 | 15.75 | 27.15 | 25-30% | 4343 | Lake | 10.1 | 69.8 | 20.1 | 15.5 | 73.5 | 4 | 2.3 | 1.1 | 3.6 |
| 6085508703 | 15.75 | 27.14 | 25-30% | 7572 | Santa Clara | 14.1 | 78.1 | 7.8 | 15.5 | 26.1 | 3 | 0.2 | 51.6 | 3.7 |
| 6029002820 | 15.75 | 27.13 | 25-30% | 6301 | Kern | 15.5 | 78.2 | 6.3 | 35 | 45.6 | 6.4 | 0.8 | 9 | 3.1 |
| 6065043235 | 15.74 | 27.12 | 25-30% | 3742 | Riverside | 21 | 73.3 | 5.7 | 22.9 | 46.3 | 7.7 | 0.3 | 18.1 | 4.6 |
| 6059110015 | 15.74 | 27.10 | 25-30% | 3548 | Orange | 8.8 | 74.2 | 17 | 14.9 | 72.3 | 0.9 | 0.4 | 7.1 | 4.4 |
| 6085503115 | 15.74 | 27.09 | 25-30% | 6027 | Santa Clara | 14.1 | 73 | 12.9 | 19.7 | 41.3 | 3.4 | 0.1 | 31.3 | 4.3 |
| 6065046403 | 15.74 | 27.08 | 25-30% | 7156 | Riverside | 15.3 | 75.8 | 8.9 | 43.1 | 47.6 | 2.9 | 0.6 | 3.2 | 2.6 |
| 6095252705 | 15.72 | 27.07 | 25-30% | 5962 | Solano | 13.3 | 79 | 7.7 | 24.8 | 32.5 | 19.3 | 0.1 | 16.1 | 7.2 |
| 6037700700 | 15.71 | 27.05 | 25-30% | 3479 | Los Angeles | 9.6 | 67 | 23.4 | 5.4 | 84.4 | 1.8 | 0 | 5.2 | 3.2 |
| 6073019406 | 15.70 | 27.04 | 25-30% | 4628 | San Diego | 12.7 | 75.5 | 11.8 | 44.7 | 44.1 | 3.8 | 0.5 | 4.3 | 2.7 |
| 6065046103 | 15.69 | 27.03 | 25-30% | 3030 | Riverside | 15.5 | 74.6 | 9.9 | 48.1 | 43.8 | 3.2 | 0.4 | 3.2 | 1.3 |
| 6087121402 | 15.69 | 27.01 | 25-30% | 4373 | Santa Cruz | 11.9 | 76.6 | 11.5 | 33.5 | 56.6 | 0.8 | 0.4 | 5.6 | 3 |
| 6029005104 | 15.69 | 27.00 | 25-30% | 3253 | Kern | 10 | 65.4 | 24.6 | 17.8 | 73.4 | 1.4 | 0.3 | 3.7 | 3.2 |
| 6013389100 | 15.69 | 26.99 | 25-30% | 2002 | Contra Costa | 11.1 | 75.1 | 13.8 | 14.5 | 47.6 | 4.4 | 0 | 28.7 | 4.7 |
| 6085506601 | 15.68 | 26.98 | 25-30% | 4482 | Santa Clara | 14.1 | 75.5 | 10.4 | 21.2 | 45.2 | 3.6 | 0.2 | 25.4 | 4.5 |
| 6037920334 | 15.68 | 26.96 | 25-30% | 6598 | Los Angeles | 11 | 72.8 | 16.2 | 16.2 | 70.7 | 2.2 | 0.3 | 7.7 | 2.9 |
| 6073020023 | 15.68 | 26.95 | 25-30% | 3941 | San Diego | 12 | 76.8 | 11.2 | 38.1 | 53.1 | 1.8 | 0.2 | 4.4 | 2.4 |
| 6083000101 | 15.67 | 26.94 | 25-30% | 6495 | Santa Barbara | 9.8 | 70.5 | 19.7 | 34.2 | 55.8 | 2.9 | 0.4 | 4.6 | 2.1 |
| 6097150800 | 15.67 | 26.93 | 25-30% | 4994 | Sonoma | 11.9 | 72.3 | 15.8 | 14.8 | 79.3 | 0.6 | 0.2 | 2.8 | 2.3 |
| 6001441402 | 15.66 | 26.91 | 25-30% | 5233 | Alameda | 13.3 | 75.6 | 11.1 | 11.2 | 26.6 | 3.4 | 0.1 | 51.3 | 7.5 |
| 6065044904 | 15.66 | 26.90 | 25-30% | 4543 | Riverside | 13 | 73.2 | 13.8 | 43.4 | 42 | 4.4 | 1 | 7.1 | 2.2 |
| 6085502400 | 15.65 | 26.89 | 25-30% | 6813 | Santa Clara | 12.6 | 75.6 | 11.8 | 19.1 | 69.2 | 1.4 | 0.2 | 6.6 | 3.4 |
| 6073016614 | 15.65 | 26.88 | 25-30% | 3912 | San Diego | 14 | 77.8 | 8.2 | 16.3 | 74 | 1.2 | 0.3 | 4.8 | 3.4 |
| 6085512307 | 15.64 | 26.86 | 25-30% | 6344 | Santa Clara | 13.9 | 72.4 | 13.7 | 23.5 | 63.8 | 1.4 | 0.4 | 7.3 | 3.5 |
| 6059052523 | 15.63 | 26.85 | 25-30% | 4175 | Orange | 10.3 | 80.9 | 8.8 | 9 | 43 | 1.2 | 0 | 41.6 | 5.2 |
| 6077004305 | 15.63 | 26.84 | 25-30% | 5702 | San Joaquin | 14.5 | 74.9 | 10.6 | 19.7 | 65.2 | 1 | 0.3 | 10.4 | 3.3 |
| 6075060400 | 15.63 | 26.83 | 25-30% | 1689 | San Francisco | 5.1 | 76.4 | 18.5 | 10.5 | 55.6 | 4.2 | 0.2 | 24.6 | 4.9 |
| 6065042709 | 15.62 | 26.81 | 25-30% | 4905 | Riverside | 9.1 | 56.5 | 34.4 | 30.4 | 59.8 | 4.1 | 0.6 | 3.1 | 2 |
| 6111001101 | 15.62 | 26.80 | 25-30% | 4491 | Ventura | 11.4 | 74.3 | 14.3 | 26 | 69.7 | 0.2 | 0.9 | 1.3 | 1.9 |

| | | | | | | | | | | | | | | |
|---|---|---|---|---|---|---|---|---|---|---|---|---|---|---|
| 6037137301 | 15.62 | 26.79 | 25-30% | 2264 | Los Angeles | 10.7 | 72.5 | 16.8 | 7.5 | 79 | 2.7 | 0.4 | 7.9 | 2.5 |
| 6037430723 | 15.61 | 26.78 | 25-30% | 4118 | Los Angeles | 11.4 | 76.1 | 12.5 | 16.3 | 22.7 | 2 | 0.2 | 56.7 | 2.1 |
| 6067008140 | 15.61 | 26.76 | 25-30% | 2894 | Sacramento | 13.7 | 73.5 | 12.8 | 13.4 | 77 | 3.2 | 0.6 | 2.7 | 3.1 |
| 6065044806 | 15.60 | 26.75 | 25-30% | 1982 | Riverside | 5.9 | 72.3 | 21.8 | 19.1 | 72.1 | 2.6 | 1 | 3 | 2.2 |
| 6065044405 | 15.60 | 26.74 | 25-30% | 2366 | Riverside | 7.9 | 69.7 | 22.4 | 13.4 | 80.8 | 1.2 | 0.8 | 1.1 | 2.7 |
| 6065045226 | 15.60 | 26.72 | 25-30% | 6810 | Riverside | 22.9 | 74.3 | 2.8 | 91.9 | 5.1 | 0.8 | 0.1 | 1.3 | 0.7 |
| 6085508503 | 15.60 | 26.71 | 25-30% | 6506 | Santa Clara | 17.9 | 70.8 | 11.3 | 12.2 | 31.8 | 1.5 | 0.3 | 51.8 | 2.4 |
| 6037920028 | 15.59 | 26.70 | 25-30% | 5684 | Los Angeles | 19.3 | 76.5 | 4.2 | 27.9 | 52.4 | 3.6 | 0.2 | 12.3 | 3.6 |
| 6023000400 | 15.58 | 26.69 | 25-30% | 3873 | Humboldt | 12.8 | 73.7 | 13.5 | 13.7 | 73.4 | 0.7 | 3.2 | 5.2 | 3.9 |
| 6059052515 | 15.57 | 26.67 | 25-30% | 8833 | Orange | 16.4 | 78.3 | 5.3 | 8.8 | 33.1 | 1.1 | 0.1 | 52.6 | 4.3 |
| 6071011404 | 15.57 | 26.66 | 25-30% | 3692 | San Bernardino | 12.6 | 75.2 | 12.2 | 13.1 | 81.7 | 0.6 | 1.1 | 0.7 | 2.8 |
| 6019005907 | 15.56 | 26.65 | 25-30% | 3095 | Fresno | 18.2 | 75.1 | 6.7 | 23.7 | 54.7 | 3.6 | 0.9 | 13.2 | 3.9 |
| 6073016810 | 15.56 | 26.64 | 25-30% | 2792 | San Diego | 11.2 | 78.8 | 10 | 13.6 | 80.6 | 0.6 | 0.5 | 2 | 2.7 |
| 6073020806 | 15.56 | 26.62 | 25-30% | 5846 | San Diego | 16.4 | 74.2 | 9.4 | 38.3 | 55.6 | 0.8 | 0.9 | 1.9 | 2.5 |
| 6065043217 | 15.56 | 26.61 | 25-30% | 3263 | Riverside | 12.6 | 79.7 | 7.7 | 24.6 | 59.2 | 4.5 | 0.3 | 7.8 | 3.5 |
| 6073019601 | 15.55 | 26.60 | 25-30% | 6291 | San Diego | 13.8 | 75.3 | 10.9 | 36.2 | 52.6 | 3 | 0.4 | 3.6 | 4.2 |
| 6037910207 | 15.55 | 26.59 | 25-30% | 6023 | Los Angeles | 14.3 | 78.9 | 6.8 | 38.3 | 37.1 | 11.4 | 0.2 | 9.5 | 3.4 |
| 6033000502 | 15.55 | 26.57 | 25-30% | 2703 | Lake | 9.9 | 71.5 | 18.6 | 13.9 | 73.8 | 2 | 4.1 | 1.8 | 4.3 |
| 6073014602 | 15.54 | 26.56 | 25-30% | 4729 | San Diego | 14.7 | 72.2 | 13.1 | 19 | 58.4 | 8.8 | 0.5 | 9 | 4.3 |
| 6085506703 | 15.54 | 26.55 | 25-30% | 3625 | Santa Clara | 14.2 | 71.4 | 14.4 | 14.3 | 62.6 | 3.1 | 0.3 | 15.3 | 4.5 |
| 6067009329 | 15.54 | 26.54 | 25-30% | 2300 | Sacramento | 17.4 | 77.8 | 4.8 | 20.3 | 29.7 | 13 | 0.3 | 30.9 | 5.7 |
| 6115040902 | 15.53 | 26.52 | 25-30% | 1737 | Yuba | 26.1 | 73.8 | 0.1 | 14.2 | 65.3 | 9 | 1.4 | 4 | 6 |
| 6037403324 | 15.53 | 26.51 | 25-30% | 6804 | Los Angeles | 8 | 80 | 12 | 11.2 | 16.8 | 3.4 | 0.2 | 66.2 | 2.2 |
| 6059021922 | 15.53 | 26.50 | 25-30% | 4834 | Orange | 11.3 | 77.7 | 11 | 14.7 | 61 | 1.8 | 0.2 | 18.3 | 4.1 |
| 6073019702 | 15.52 | 26.49 | 25-30% | 4933 | San Diego | 10.8 | 78.7 | 10.5 | 27.7 | 63.2 | 1.6 | 0.3 | 3.5 | 3.6 |
| 6073009101 | 15.52 | 26.47 | 25-30% | 5318 | San Diego | 9.2 | 73.2 | 17.6 | 14.6 | 74.7 | 1.3 | 0.3 | 5.2 | 3.9 |
| 6095251804 | 15.52 | 26.46 | 25-30% | 3655 | Solano | 11.4 | 76.3 | 12.3 | 20.8 | 9.4 | 13.4 | 0.2 | 51.7 | 4.5 |
| 6073020809 | 15.52 | 26.45 | 25-30% | 6778 | San Diego | 14 | 77 | 9 | 34 | 62 | 0.4 | 0.7 | 1.3 | 1.7 |
| 6073019806 | 15.51 | 26.43 | 25-30% | 11116 | San Diego | 14.7 | 71.8 | 13.5 | 16 | 66.6 | 2.4 | 0.3 | 10.6 | 4.2 |
| 6097154100 | 15.51 | 26.42 | 25-30% | 3729 | Sonoma | 9.9 | 74.1 | 16 | 29.6 | 67.3 | 0.3 | 0.6 | 0.7 | 1.6 |
| 6017030301 | 15.50 | 26.41 | 25-30% | 2469 | El Dorado | 11.4 | 82.2 | 6.4 | 28.8 | 63.8 | 0.7 | 0.9 | 3.2 | 2.5 |
| 6073000202 | 15.49 | 26.40 | 25-30% | 4208 | San Diego | 7.6 | 79.2 | 13.2 | 13.9 | 75.6 | 2.4 | 0.3 | 4.7 | 3.2 |
| 6065044507 | 15.48 | 26.38 | 25-30% | 6565 | Riverside | 18 | 74.6 | 7.4 | 64.6 | 25.8 | 5.8 | 0.7 | 1.9 | 1.3 |
| 6001442301 | 15.48 | 26.37 | 25-30% | 4388 | Alameda | 12.8 | 77.7 | 9.5 | 19.8 | 32.1 | 3.6 | 0.3 | 40.5 | 3.9 |
| 6001442601 | 15.47 | 26.36 | 25-30% | 3844 | Alameda | 12.6 | 74 | 13.4 | 18.8 | 44.1 | 1.7 | 0.2 | 31.7 | 3.6 |
| 6037431300 | 15.47 | 26.35 | 25-30% | 2661 | Los Angeles | 11.4 | 78.2 | 10.4 | 31.9 | 42 | 2.9 | 0.1 | 20.4 | 2.6 |
| 6085512035 | 15.47 | 26.33 | 25-30% | 4172 | Santa Clara | 13.7 | 76 | 10.3 | 27.3 | 47.3 | 2.8 | 0.3 | 17.6 | 4.6 |
| 6111005908 | 15.46 | 26.32 | 25-30% | 2711 | Ventura | 11.7 | 74.8 | 13.5 | 11.4 | 75.4 | 1.9 | 0.3 | 8 | 3 |
| 6065043250 | 15.46 | 26.31 | 25-30% | 8339 | Riverside | 15.9 | 77.9 | 6.2 | 23.7 | 49.7 | 5 | 0.8 | 16.4 | 4.4 |
| 6097150203 | 15.45 | 26.30 | 25-30% | 4505 | Sonoma | 9.4 | 61 | 29.6 | 13.9 | 80.8 | 0.6 | 0.3 | 2.9 | 1.6 |
| 6097150902 | 15.44 | 26.28 | 25-30% | 3350 | Sonoma | 10.9 | 75.2 | 13.9 | 9.9 | 83.9 | 0.5 | 0.4 | 1.7 | 3.6 |
| 6097150306 | 15.44 | 26.27 | 25-30% | 4107 | Sonoma | 12.2 | 77.4 | 10.4 | 36.4 | 59.4 | 0.3 | 0.3 | 1.9 | 1.7 |
| 6073013412 | 15.44 | 26.26 | 25-30% | 5086 | San Diego | 11.1 | 74.8 | 14.1 | 48.9 | 30.3 | 3.4 | 0.1 | 14.7 | 2.6 |
| 6087121500 | 15.44 | 26.25 | 25-30% | 4917 | Santa Cruz | 9 | 76.7 | 14.3 | 22.6 | 69.6 | 1.2 | 0.7 | 2.6 | 3.4 |
| 6037216100 | 15.44 | 26.23 | 25-30% | 2289 | Los Angeles | 9 | 74.7 | 16.3 | 12.8 | 43.7 | 20.8 | 0.1 | 17.5 | 5.1 |
| 6085507805 | 15.44 | 26.22 | 25-30% | 5397 | Santa Clara | 12.1 | 77.2 | 10.7 | 9.2 | 30.1 | 0.8 | 0.2 | 56.1 | 3.6 |
| 6073009301 | 15.44 | 26.21 | 25-30% | 4164 | San Diego | 11.3 | 77.1 | 11.6 | 20 | 51.1 | 7.3 | 0.3 | 15.5 | 5.8 |
| 6017032000 | 15.43 | 26.19 | 25-30% | 1015 | El Dorado | 9 | 78 | 13 | 4.1 | 91.4 | 0.3 | 0.7 | 1.3 | 2.2 |
| 6085510700 | 15.43 | 26.18 | 25-30% | 4775 | Santa Clara | 13.2 | 76.1 | 10.7 | 10.6 | 44.6 | 3.4 | 0 | 37.6 | 3.7 |
| 6081600402 | 15.42 | 26.17 | 25-30% | 5068 | San Mateo | 10.7 | 76.7 | 12.6 | 38.6 | 7 | 2.3 | 0.7 | 49.7 | 1.7 |
| 6001441401 | 15.42 | 26.16 | 25-30% | 6931 | Alameda | 14.9 | 75.1 | 10 | 15.1 | 24.1 | 5.4 | 0.1 | 50.4 | 4.7 |
| 6085506502 | 15.41 | 26.14 | 25-30% | 3907 | Santa Clara | 10.5 | 81.9 | 7.6 | 15.7 | 67 | 2.2 | 0.2 | 10.5 | 4.4 |
| 6041104102 | 15.41 | 26.13 | 25-30% | 5135 | Marin | 13.4 | 76.6 | 10 | 34.3 | 48.7 | 4.5 | 0.3 | 8.8 | 3.5 |
| 6067007426 | 15.41 | 26.12 | 25-30% | 2234 | Sacramento | 16.1 | 76.9 | 7 | 15.5 | 52.1 | 14.1 | 0.4 | 10.4 | 7.5 |
| 6037571102 | 15.40 | 26.11 | 25-30% | 3877 | Los Angeles | 12.7 | 75.3 | 12 | 25.4 | 58.5 | 4.6 | 0.3 | 7.2 | 3.9 |
| 6013332000 | 15.40 | 26.09 | 25-30% | 7534 | Contra Costa | 11.5 | 73.8 | 14.7 | 21.8 | 63.3 | 2 | 0.3 | 8.4 | 4.3 |
| 6081603801 | 15.40 | 26.08 | 25-30% | 2242 | San Mateo | 8.5 | 80.8 | 10.7 | 19.1 | 40.1 | 2.3 | 0.4 | 34.3 | 3.9 |
| 6085508602 | 15.39 | 26.07 | 25-30% | 3839 | Santa Clara | 13.9 | 73.5 | 12.6 | 18.2 | 42.8 | 1.6 | 0.5 | 33.4 | 3.5 |
| 6023011600 | 15.39 | 26.06 | 25-30% | 4133 | Humboldt | 9.1 | 78 | 12.9 | 7.5 | 84 | 0.5 | 2.9 | 1 | 4.2 |
| 6085511000 | 15.38 | 26.04 | 25-30% | 6402 | Santa Clara | 14.4 | 73.2 | 12.4 | 7.7 | 48.6 | 2.4 | 0.1 | 36.5 | 4.7 |
| 6017030402 | 15.38 | 26.03 | 25-30% | 3723 | El Dorado | 10.1 | 78.2 | 11.7 | 18.1 | 75 | 0.6 | 0.6 | 3 | 2.7 |
| 6019004301 | 15.38 | 26.02 | 25-30% | 3853 | Fresno | 6.6 | 67.9 | 25.5 | 9 | 78.5 | 1.6 | 0.1 | 8.9 | 1.9 |
| 6071000107 | 15.37 | 26.01 | 25-30% | 2957 | San Bernardino | 11.3 | 78.2 | 10.5 | 33.2 | 51.3 | 3 | 0.3 | 10.1 | 2 |
| 6109001100 | 15.37 | 25.99 | 25-30% | 3883 | Tuolumne | 10.6 | 70.4 | 19 | 9.8 | 84.4 | 0.4 | 1.3 | 1.3 | 2.8 |
| 6001451505 | 15.37 | 25.98 | 25-30% | 3337 | Alameda | 12.5 | 79.7 | 7.8 | 10.4 | 79.5 | 0.5 | 0.3 | 5.8 | 3.5 |
| 6089011209 | 15.36 | 25.97 | 25-30% | 6113 | Shasta | 17.5 | 70.7 | 11.8 | 14.8 | 68.9 | 2 | 1.9 | 8 | 4.4 |

| | | | | | | | | | | | | | | |
|---|---|---|---|---|---|---|---|---|---|---|---|---|---|---|
| 6059110114 | 15.35 | 25.96 | 25-30% | 4828 | Orange | 10.8 | 77.4 | 11.8 | 20.9 | 55.9 | 1.2 | 0.4 | 17.3 | 4.3 |
| 6059032012 | 15.35 | 25.94 | 25-30% | 3626 | Orange | 9.5 | 74.2 | 16.3 | 13.4 | 77.1 | 1.5 | 0.1 | 4.7 | 3.2 |
| 6037910206 | 15.34 | 25.93 | 25-30% | 3246 | Los Angeles | 19.1 | 76.9 | 4 | 40.7 | 27 | 17.3 | 0.1 | 11.3 | 3.6 |
| 6037276601 | 15.34 | 25.92 | 25-30% | 3838 | Los Angeles | 10.4 | 74.8 | 14.8 | 11.7 | 65.7 | 4.9 | 0.2 | 13.3 | 4.2 |
| 6071008401 | 15.34 | 25.90 | 25-30% | 9953 | San Bernardino | 11.6 | 79.9 | 8.5 | 30.4 | 51.4 | 4.8 | 0.2 | 9.9 | 3.2 |
| 6067009619 | 15.33 | 25.89 | 25-30% | 7824 | Sacramento | 15.1 | 76.4 | 8.5 | 18 | 36.8 | 11.2 | 0.3 | 27.5 | 6.2 |
| 6007000800 | 15.32 | 25.88 | 25-30% | 5295 | Butte | 12 | 72.4 | 15.6 | 9.5 | 83.3 | 1.2 | 0.7 | 2.3 | 2.9 |
| 6067008122 | 15.31 | 25.87 | 25-30% | 3384 | Sacramento | 9.7 | 71.9 | 18.4 | 12.1 | 77.6 | 2.6 | 0.5 | 4.1 | 3.2 |
| 6037400207 | 15.31 | 25.85 | 25-30% | 4798 | Los Angeles | 10.3 | 73.9 | 15.8 | 24.6 | 62.9 | 1.6 | 0.4 | 7.8 | 2.7 |
| 6075026301 | 15.31 | 25.84 | 25-30% | 4875 | San Francisco | 9.4 | 75.4 | 15.2 | 28.1 | 9 | 0.8 | 0.1 | 60.5 | 1.5 |
| 6067009330 | 15.31 | 25.83 | 25-30% | 3818 | Sacramento | 16.4 | 75.8 | 7.8 | 14.8 | 40 | 8.1 | 0.4 | 31.4 | 5.2 |
| 6067008143 | 15.31 | 25.82 | 25-30% | 4248 | Sacramento | 14 | 77.2 | 8.8 | 17.8 | 72.5 | 3 | 0.6 | 2.3 | 3.9 |
| 6111005100 | 15.30 | 25.80 | 25-30% | 3768 | Ventura | 9.7 | 75.7 | 14.6 | 45.9 | 46.2 | 3 | 0.6 | 3.2 | 1.1 |
| 6095250501 | 15.29 | 25.79 | 25-30% | 2071 | Solano | 13.4 | 73.4 | 13.2 | 26.4 | 44 | 12 | 1 | 12 | 4.5 |
| 6095252201 | 15.28 | 25.78 | 25-30% | 8761 | Solano | 14.1 | 74.1 | 11.8 | 12.3 | 51.4 | 8.2 | 0.4 | 22.7 | 5 |
| 6079012402 | 15.28 | 25.77 | 25-30% | 9097 | San Luis Obispo | 12.9 | 71.7 | 15.4 | 32.4 | 61.5 | 0.8 | 0.6 | 2.2 | 2.6 |
| 6073010501 | 15.27 | 25.75 | 25-30% | 1433 | San Diego | 10.4 | 75.7 | 13.9 | 32.1 | 56.6 | 1.1 | 0.6 | 5.7 | 3.8 |
| 6085509500 | 15.27 | 25.74 | 25-30% | 5565 | Santa Clara | 13.6 | 81.5 | 4.9 | 38.8 | 37.2 | 2.2 | 0.2 | 17.4 | 4.2 |
| 6085502909 | 15.26 | 25.73 | 25-30% | 5073 | Santa Clara | 12.6 | 75.2 | 12.2 | 28.8 | 53.6 | 2.5 | 0.3 | 10.5 | 4.4 |
| 6059099406 | 15.26 | 25.72 | 25-30% | 4468 | Orange | 10.1 | 71.7 | 18.2 | 14.5 | 66.9 | 1 | 0.5 | 13.4 | 3.6 |
| 6075026001 | 15.25 | 25.70 | 25-30% | 5863 | San Francisco | 11.1 | 77.5 | 11.4 | 48 | 11 | 1.6 | 0.1 | 37.2 | 2 |
| 6001406700 | 15.24 | 25.69 | 25-30% | 5048 | Alameda | 11.4 | 73.9 | 14.7 | 8.8 | 49.5 | 13.6 | 0.5 | 22.4 | 5.2 |
| 6055200602 | 15.24 | 25.68 | 25-30% | 4468 | Napa | 11.9 | 66.9 | 21.2 | 29.7 | 64.5 | 0.5 | 0.2 | 3.1 | 1.9 |
| 6037297300 | 15.24 | 25.67 | 25-30% | 2374 | Los Angeles | 17.9 | 66.1 | 16 | 21.7 | 64.4 | 4.5 | 0.1 | 5.4 | 3.9 |
| 6037103101 | 15.24 | 25.65 | 25-30% | 2670 | Los Angeles | 9.6 | 78.3 | 12.1 | 21.2 | 66 | 0.7 | 0.3 | 9 | 2.8 |
| 6061021129 | 15.22 | 25.64 | 25-30% | 3204 | Placer | 13.4 | 76.7 | 9.9 | 15 | 75.4 | 1.5 | 1.1 | 3.2 | 3.8 |
| 6065041803 | 15.21 | 25.63 | 25-30% | 6475 | Riverside | 17.5 | 77.4 | 5.1 | 24 | 50.1 | 4.5 | 0.2 | 17.4 | 3.8 |
| 6037500100 | 15.21 | 25.61 | 25-30% | 3540 | Los Angeles | 8.4 | 71.2 | 20.4 | 25.2 | 56.4 | 1 | 0 | 14.9 | 2.5 |
| 6037408703 | 15.20 | 25.60 | 25-30% | 6528 | Los Angeles | 9.8 | 78.3 | 11.9 | 7.6 | 9.2 | 0.8 | 0 | 80.9 | 1.5 |
| 6059021809 | 15.20 | 25.59 | 25-30% | 2902 | Orange | 10.1 | 71.4 | 18.5 | 15.9 | 73.3 | 1.2 | 0.1 | 7.1 | 2.4 |
| 6085512033 | 15.19 | 25.58 | 25-30% | 6125 | Santa Clara | 13.3 | 77.1 | 9.6 | 27.3 | 48.3 | 3.2 | 0.3 | 17.2 | 3.7 |
| 6037300901 | 15.18 | 25.56 | 25-30% | 6463 | Los Angeles | 9.8 | 71.4 | 18.8 | 8.3 | 61.6 | 0.6 | 0.1 | 26.1 | 3.4 |
| 6009000300 | 15.18 | 25.55 | 25-30% | 6969 | Calaveras | 8.3 | 68.9 | 22.8 | 9 | 83.9 | 1.1 | 1.3 | 1.1 | 3.5 |
| 6023010102 | 15.18 | 25.54 | 25-30% | 2884 | Humboldt | 11.9 | 71.8 | 16.3 | 7.5 | 64.3 | 0.2 | 20.7 | 1.1 | 6.1 |
| 6001407800 | 15.17 | 25.53 | 25-30% | 2425 | Alameda | 8.3 | 82.8 | 8.9 | 17.5 | 33.7 | 32.5 | 0.4 | 10.3 | 5.6 |
| 6095252914 | 15.17 | 25.51 | 25-30% | 5266 | Solano | 14.9 | 79.1 | 6 | 22.1 | 49.1 | 9.8 | 0.3 | 12.3 | 6.3 |
| 6013355109 | 15.16 | 25.50 | 25-30% | 6416 | Contra Costa | 12.1 | 77 | 10.9 | 23.6 | 40.1 | 16.2 | 0.5 | 14.6 | 5 |
| 6059052519 | 15.16 | 25.49 | 25-30% | 4212 | Orange | 13.7 | 79.2 | 7.1 | 11.4 | 51.3 | 1.6 | 0.2 | 29.4 | 6.1 |
| 6081601800 | 15.16 | 25.48 | 25-30% | 6148 | San Mateo | 11.5 | 71.3 | 17.2 | 26.9 | 33.5 | 1.6 | 0.3 | 33.5 | 4.2 |
| 6037141600 | 15.16 | 25.46 | 25-30% | 4029 | Los Angeles | 12 | 69.7 | 18.3 | 5.4 | 83.9 | 2.2 | 0 | 5.7 | 2.7 |
| 6037108201 | 15.13 | 25.45 | 25-30% | 5551 | Los Angeles | 13.4 | 75.1 | 11.5 | 7.3 | 41.6 | 2.1 | 0 | 45 | 3.9 |
| 6037930301 | 15.13 | 25.44 | 25-30% | 886 | Los Angeles | 8.3 | 81.5 | 10.2 | 19.2 | 61.5 | 11.3 | 1.4 | 4.7 | 1.9 |
| 6059099231 | 15.13 | 25.43 | 25-30% | 5488 | Orange | 10.9 | 70.7 | 18.4 | 7.7 | 64.2 | 0.5 | 0.3 | 24 | 3.5 |
| 6067004005 | 15.13 | 25.41 | 25-30% | 4185 | Sacramento | 8.7 | 64.6 | 26.7 | 14.1 | 42.8 | 13.7 | 0.4 | 23.5 | 5.5 |
| 6001451601 | 15.12 | 25.40 | 25-30% | 4617 | Alameda | 12.4 | 76.5 | 11.1 | 13.8 | 75.1 | 1.4 | 0.2 | 6.1 | 3.4 |
| 6059099251 | 15.12 | 25.39 | 25-30% | 5218 | Orange | 11.3 | 75.8 | 12.9 | 22.2 | 38 | 1.9 | 0.4 | 34.1 | 3.4 |
| 6043000200 | 15.12 | 25.38 | 25-30% | 3352 | Mariposa | 7.6 | 70.4 | 22 | 9.2 | 85.1 | 0.6 | 1.3 | 1 | 2.7 |
| 6019005524 | 15.11 | 25.36 | 25-30% | 4571 | Fresno | 15.8 | 77.1 | 7.1 | 14.8 | 65.6 | 2.9 | 0.2 | 13.2 | 3.3 |
| 6059021917 | 15.10 | 25.35 | 25-30% | 3435 | Orange | 9.9 | 73.3 | 16.8 | 11.9 | 77 | 0.5 | 0.1 | 7.9 | 2.5 |
| 6095250106 | 15.10 | 25.34 | 25-30% | 4412 | Solano | 12.1 | 78.3 | 9.6 | 9 | 23.1 | 14.3 | 0.1 | 48.2 | 5.2 |
| 6073019206 | 15.09 | 25.32 | 25-30% | 5614 | San Diego | 18.9 | 73.6 | 7.5 | 72.9 | 20.2 | 2.2 | 0.4 | 2.2 | 2 |
| 6059063201 | 15.09 | 25.31 | 25-30% | 3801 | Orange | 11.5 | 81 | 7.5 | 16.4 | 73.8 | 0.9 | 0.3 | 4.7 | 3.8 |
| 6111007511 | 15.08 | 25.30 | 25-30% | 2222 | Ventura | 9.8 | 78 | 12.2 | 6.3 | 81.9 | 1.8 | 0 | 7.2 | 2.9 |
| 6007002601 | 15.07 | 25.29 | 25-30% | 2324 | Butte | 8 | 64 | 28 | 8 | 82.9 | 0.7 | 2.2 | 2.6 | 3.5 |
| 6065044510 | 15.07 | 25.27 | 25-30% | 5808 | Riverside | 19.9 | 74 | 6.1 | 60.5 | 25.5 | 8.6 | 0.7 | 2.5 | 2.3 |
| 6089012302 | 15.06 | 25.26 | 25-30% | 5450 | Shasta | 10.5 | 73.5 | 16 | 8.1 | 84.2 | 0.3 | 2.3 | 1.7 | 3.2 |
| 6063000202 | 15.06 | 25.25 | 25-30% | 1161 | Plumas | 7.4 | 71.4 | 21.2 | 5.7 | 89.1 | 0.3 | 1.9 | 0.7 | 2.2 |
| 6037401002 | 15.06 | 25.24 | 25-30% | 3973 | Los Angeles | 11.5 | 75 | 13.5 | 24.5 | 65.9 | 1 | 0.3 | 5.7 | 2.6 |
| 6059021825 | 15.06 | 25.22 | 25-30% | 3107 | Orange | 9 | 79.5 | 11.5 | 11.5 | 69.9 | 1.4 | 0.1 | 14.1 | 2.9 |
| 6073018803 | 15.05 | 25.21 | 25-30% | 4564 | San Diego | 10.4 | 68.2 | 21.4 | 22.3 | 70.2 | 1.2 | 0.5 | 3.2 | 2.5 |
| 6085504416 | 15.04 | 25.20 | 25-30% | 3591 | Santa Clara | 13.8 | 76.5 | 9.7 | 12.2 | 17.6 | 2.9 | 0.1 | 63 | 4.2 |
| 6073019602 | 15.03 | 25.19 | 25-30% | 5464 | San Diego | 14.7 | 74.8 | 10.5 | 42.6 | 50 | 2.3 | 0.5 | 2.5 | 2.1 |
| 6037189702 | 15.02 | 25.17 | 25-30% | 2227 | Los Angeles | 6.3 | 79.4 | 14.3 | 9.3 | 77 | 4.4 | 0.2 | 5.7 | 3.5 |
| 6059063103 | 15.01 | 25.16 | 25-30% | 2643 | Orange | 10 | 75.8 | 14.2 | 8.9 | 84.7 | 0.8 | 0.3 | 2.3 | 3 |
| 6023000300 | 15.01 | 25.15 | 25-30% | 5544 | Humboldt | 13.3 | 74.1 | 12.6 | 10.4 | 73.1 | 1.6 | 2.8 | 6.7 | 5.4 |
| 6065044604 | 15.00 | 25.14 | 25-30% | 4320 | Riverside | 10.9 | 71.4 | 17.7 | 39.3 | 49.6 | 2.7 | 1.1 | 5.3 | 2 |

| | | | | | | | | | | | | | | |
|---|---|---|---|---|---|---|---|---|---|---|---|---|---|---|
| 6075026003 | 15.00 | 25.12 | 25-30% | 4908 | San Francisco | 10.3 | 76.2 | 13.5 | 38.9 | 13.1 | 2.1 | 0.1 | 43.2 | 2.5 |
| 6037920039 | 15.00 | 25.11 | 25-30% | 1896 | Los Angeles | 9.4 | 81.2 | 9.4 | 22.5 | 64.2 | 1.8 | 0.3 | 7.5 | 3.7 |
| 6037108104 | 14.99 | 25.10 | 25-30% | 1698 | Los Angeles | 10.1 | 71.3 | 18.6 | 10.1 | 62.8 | 2.8 | 0.1 | 21.5 | 2.8 |
| 6079011002 | 14.99 | 25.09 | 25-30% | 2877 | San Luis Obispo | 5.8 | 82.1 | 12.1 | 9.6 | 82.3 | 0.6 | 0.1 | 4.4 | 3 |
| 6059110001 | 14.98 | 25.07 | 25-30% | 4467 | Orange | 11.1 | 76.9 | 12 | 17.6 | 63.6 | 1 | 0.3 | 13.8 | 3.7 |
| 6071009109 | 14.98 | 25.06 | 25-30% | 6070 | San Bernardino | 11.4 | 76.2 | 12.4 | 24.7 | 67.4 | 1.1 | 0.5 | 4.1 | 2.2 |
| 6067009331 | 14.98 | 25.05 | 25-30% | 7049 | Sacramento | 17 | 77.1 | 5.9 | 15.2 | 38.5 | 10.4 | 0.2 | 29.5 | 6.2 |
| 6065043248 | 14.97 | 25.03 | 25-30% | 4214 | Riverside | 13.5 | 77.5 | 9 | 19.6 | 59.2 | 4 | 0.5 | 12.4 | 4.3 |
| 6059052514 | 14.96 | 25.02 | 25-30% | 5327 | Orange | 11.8 | 77 | 11.2 | 8.8 | 53.6 | 1.6 | 0.1 | 29 | 6.8 |
| 6095253203 | 14.96 | 25.01 | 25-30% | 4147 | Solano | 14.1 | 73.3 | 12.6 | 26.5 | 61.7 | 3.5 | 0.5 | 3.4 | 4.3 |
| 6059110006 | 14.95 | 25.00 | 20-25% | 2885 | Orange | 9.4 | 71.6 | 19 | 12 | 75 | 1 | 0.3 | 8.7 | 3 |
| 6019005507 | 14.94 | 24.98 | 20-25% | 5732 | Fresno | 11.4 | 78.9 | 9.7 | 19.9 | 59.6 | 3.8 | 0.4 | 12.8 | 3.5 |
| 6037920033 | 14.94 | 24.97 | 20-25% | 515 | Los Angeles | 7.2 | 79.6 | 13.2 | 24.5 | 64.9 | 3.7 | 0.8 | 2.9 | 3.3 |
| 6001430600 | 14.94 | 24.96 | 20-25% | 5887 | Alameda | 10.9 | 74 | 15.1 | 14 | 52.5 | 4.2 | 0.4 | 24.6 | 4.3 |
| 6111005305 | 14.93 | 24.95 | 20-25% | 5777 | Ventura | 8.6 | 78 | 13.4 | 14.5 | 72.6 | 0.9 | 0.2 | 8.8 | 3 |
| 6037800329 | 14.92 | 24.93 | 20-25% | 6421 | Los Angeles | 11.5 | 80.5 | 8 | 8.4 | 76.7 | 1.9 | 0.2 | 8.7 | 4 |
| 6037920314 | 14.92 | 24.92 | 20-25% | 2909 | Los Angeles | 12.6 | 80.1 | 7.3 | 21.4 | 65.5 | 2.5 | 0.4 | 7.8 | 2.5 |
| 6093000100 | 14.91 | 24.91 | 20-25% | 1458 | Siskiyou | 17.4 | 71.8 | 10.8 | 51 | 44.9 | 0.3 | 1 | 0.1 | 2.7 |
| 6055200803 | 14.91 | 24.90 | 20-25% | 2165 | Napa | 13.3 | 70.9 | 15.8 | 18.8 | 76.8 | 0.3 | 0.3 | 1.9 | 1.8 |
| 6071008403 | 14.90 | 24.88 | 20-25% | 5833 | San Bernardino | 10.2 | 73.6 | 16.2 | 18.9 | 67 | 3.5 | 0.3 | 7.3 | 2.9 |
| 6075011200 | 14.90 | 24.87 | 20-25% | 3286 | San Francisco | 4 | 73.8 | 22.2 | 5.7 | 55.1 | 1.5 | 0.1 | 35.1 | 2.4 |
| 6039000103 | 14.89 | 24.86 | 20-25% | 5033 | Madera | 7.8 | 64.4 | 27.8 | 7.7 | 85.8 | 0.3 | 1.7 | 1.1 | 3.3 |
| 6029003808 | 14.89 | 24.85 | 20-25% | 4439 | Kern | 15.7 | 78.9 | 5.4 | 27.6 | 60.4 | 3.3 | 0.8 | 5.1 | 2.8 |
| 6085505008 | 14.88 | 24.83 | 20-25% | 5254 | Santa Clara | 13 | 85.5 | 1.5 | 8.4 | 27.2 | 2 | 0.2 | 59.3 | 3 |
| 6071000116 | 14.88 | 24.82 | 20-25% | 10856 | San Bernardino | 15.9 | 79.2 | 4.9 | 24.5 | 33.6 | 5.3 | 0.1 | 32.4 | 4 |
| 6075015300 | 14.88 | 24.81 | 20-25% | 2040 | San Francisco | 6.7 | 78.4 | 14.9 | 7.1 | 67.5 | 6.7 | 0.2 | 15.3 | 3.2 |
| 6037920116 | 14.88 | 24.80 | 20-25% | 5181 | Los Angeles | 12.6 | 81.1 | 6.3 | 22.3 | 61.6 | 2.7 | 0.4 | 9.6 | 3.5 |
| 6007000104 | 14.87 | 24.78 | 20-25% | 5636 | Butte | 14.2 | 72.2 | 13.6 | 16.9 | 70.9 | 1.8 | 0.8 | 5.8 | 3.8 |
| 6085512052 | 14.87 | 24.77 | 20-25% | 3988 | Santa Clara | 11.2 | 76.6 | 12.2 | 22.6 | 51.9 | 3.3 | 0.2 | 17.1 | 4.8 |
| 6083002932 | 14.85 | 24.76 | 20-25% | 2499 | Santa Barbara | 10.8 | 79 | 10.2 | 27.2 | 64.7 | 0.5 | 0.2 | 4.8 | 2.6 |
| 6073020709 | 14.84 | 24.74 | 20-25% | 8007 | San Diego | 12.9 | 76.6 | 10.5 | 25.9 | 62.2 | 1.4 | 0.2 | 8.2 | 2.1 |
| 6065044805 | 14.83 | 24.73 | 20-25% | 1701 | Riverside | 3 | 67.1 | 29.9 | 12.1 | 81.1 | 2.2 | 0.3 | 3.1 | 1.2 |
| 6111003013 | 14.83 | 24.72 | 20-25% | 4657 | Ventura | 14.4 | 77.1 | 8.5 | 57.6 | 27.5 | 3.6 | 0.1 | 8.7 | 2.6 |
| 6067009324 | 14.83 | 24.71 | 20-25% | 2742 | Sacramento | 11 | 76.6 | 12.4 | 14 | 58 | 4.2 | 0.9 | 19.3 | 3.6 |
| 6041102203 | 14.83 | 24.69 | 20-25% | 4753 | Marin | 11.9 | 75.9 | 12.2 | 33.2 | 54.4 | 2.6 | 0.1 | 6.8 | 2.8 |
| 6065042714 | 14.83 | 24.68 | 20-25% | 3230 | Riverside | 9.4 | 69.9 | 20.7 | 10.9 | 82.8 | 0.9 | 0.7 | 2.5 | 2.2 |
| 6085504201 | 14.82 | 24.67 | 20-25% | 4779 | Santa Clara | 12 | 72.8 | 15.2 | 34.1 | 44.2 | 2.2 | 0.4 | 16.3 | 2.8 |
| 6097154202 | 14.81 | 24.66 | 20-25% | 5994 | Sonoma | 11.9 | 69.2 | 18.9 | 23.7 | 71.5 | 0.2 | 1 | 1.4 | 2.1 |
| 6053010603 | 14.81 | 24.64 | 20-25% | 7304 | Monterey | 16.2 | 78.5 | 5.3 | 61.6 | 18.5 | 2.7 | 0.4 | 13.6 | 3.2 |
| 6073018515 | 14.81 | 24.63 | 20-25% | 4494 | San Diego | 9.4 | 71.8 | 18.8 | 15 | 70.8 | 3.5 | 0.2 | 6.9 | 3.7 |
| 6085512021 | 14.80 | 24.62 | 20-25% | 6087 | Santa Clara | 12.3 | 79.1 | 8.6 | 26.4 | 34.2 | 4.3 | 0.3 | 31.4 | 3.4 |
| 6101050604 | 14.79 | 24.61 | 20-25% | 4178 | Sutter | 12.3 | 72 | 15.7 | 16.2 | 65.3 | 3.3 | 1.1 | 10.2 | 3.9 |
| 6085503802 | 14.79 | 24.59 | 20-25% | 7884 | Santa Clara | 13.1 | 75.6 | 11.3 | 43 | 17.8 | 2.7 | 0.2 | 33.5 | 2.7 |
| 6053012700 | 14.79 | 24.58 | 20-25% | 3299 | Monterey | 6.5 | 79.3 | 14.2 | 12 | 70.1 | 3.1 | 0.3 | 10.8 | 3.7 |
| 6037577501 | 14.79 | 24.57 | 20-25% | 3435 | Los Angeles | 8 | 68.8 | 23.2 | 10.1 | 82.9 | 0.8 | 0.2 | 3.7 | 2.3 |
| 6001423500 | 14.77 | 24.56 | 20-25% | 3118 | Alameda | 5.8 | 75.6 | 18.6 | 8.2 | 50.8 | 19.1 | 0.3 | 15.9 | 5.8 |
| 6085512019 | 14.77 | 24.54 | 20-25% | 4737 | Santa Clara | 13.4 | 77.5 | 9.1 | 32 | 32.2 | 3.8 | 0.3 | 28.1 | 3.6 |
| 6083002806 | 14.76 | 24.53 | 20-25% | 2266 | Santa Barbara | 13.6 | 73.6 | 12.8 | 36.9 | 50.7 | 4.3 | 0.5 | 4.1 | 3.5 |
| 6073002902 | 14.76 | 24.52 | 20-25% | 5272 | San Diego | 11.2 | 77.6 | 11.2 | 23.8 | 53.5 | 8.8 | 0.5 | 9.6 | 3.8 |
| 6071009201 | 14.74 | 24.50 | 20-25% | 4557 | San Bernardino | 11.9 | 74.6 | 13.5 | 11.9 | 83.4 | 0.7 | 0.5 | 1.2 | 2.3 |
| 6073020904 | 14.74 | 24.49 | 20-25% | 3075 | San Diego | 8.8 | 68.9 | 22.3 | 12.4 | 83.4 | 0.4 | 1.2 | 0.9 | 1.7 |
| 6073013314 | 14.73 | 24.48 | 20-25% | 14837 | San Diego | 19.5 | 76.8 | 3.7 | 44.9 | 20.1 | 5.4 | 0.2 | 25.1 | 4.3 |
| 6067008136 | 14.73 | 24.47 | 20-25% | 2339 | Sacramento | 13.4 | 74.2 | 12.4 | 11.9 | 74 | 3.1 | 0.2 | 6.3 | 4.5 |
| 6059099512 | 14.72 | 24.45 | 20-25% | 2868 | Orange | 7 | 78.5 | 14.5 | 12.1 | 74.9 | 1.4 | 0.1 | 7.7 | 3.7 |
| 6083000102 | 14.72 | 24.44 | 20-25% | 5245 | Santa Barbara | 10.2 | 74.4 | 15.4 | 24.8 | 63.4 | 1.7 | 0.5 | 6.8 | 2.9 |
| 6083000301 | 14.72 | 24.43 | 20-25% | 2810 | Santa Barbara | 8.3 | 83.4 | 8.3 | 33.2 | 57.6 | 1.8 | 0.1 | 3.9 | 3.4 |
| 6059011710 | 14.70 | 24.42 | 20-25% | 3442 | Orange | 9.1 | 72.2 | 18.7 | 16.4 | 65.7 | 1.6 | 0.1 | 14.4 | 2 |
| 6037135201 | 14.69 | 24.40 | 20-25% | 2620 | Los Angeles | 11.3 | 70.3 | 18.4 | 14.5 | 67.9 | 3.2 | 0.2 | 11.1 | 3.1 |
| 6037910210 | 14.69 | 24.39 | 20-25% | 7103 | Los Angeles | 13.3 | 80 | 6.7 | 26.6 | 48.6 | 12.6 | 0.3 | 8.5 | 3.3 |
| 6007001703 | 14.68 | 24.38 | 20-25% | 2852 | Butte | 10.2 | 65.4 | 24.4 | 6.8 | 87.3 | 0.3 | 0.9 | 1.1 | 3.6 |
| 6095252306 | 14.68 | 24.37 | 20-25% | 3303 | Solano | 10.3 | 72.4 | 17.3 | 18.5 | 50.3 | 13.6 | 0.4 | 11 | 6.1 |
| 6073020902 | 14.68 | 24.35 | 20-25% | 2122 | San Diego | 8.2 | 77.5 | 14.3 | 10.2 | 84.6 | 1.5 | 0.2 | 1.2 | 2.2 |
| 6111006600 | 14.68 | 24.34 | 20-25% | 4019 | Ventura | 9.8 | 70.9 | 19.3 | 12.3 | 78.9 | 1 | 0.4 | 4.9 | 2.5 |
| 6067009636 | 14.67 | 24.33 | 20-25% | 7672 | Sacramento | 20.2 | 74.4 | 5.4 | 19.5 | 26.1 | 10.7 | 0.2 | 37.5 | 6 |
| 6073019106 | 14.66 | 24.32 | 20-25% | 9131 | San Diego | 13 | 74.6 | 12.4 | 31.7 | 54.5 | 0.8 | 7.5 | 2.5 | 3.1 |
| 6077004202 | 14.65 | 24.30 | 20-25% | 1687 | San Joaquin | 8.8 | 59.3 | 31.9 | 10 | 82.4 | 0.6 | 0.1 | 4.9 | 2.1 |

| | | | | | | | | | | | | | | |
|---|---|---|---|---|---|---|---|---|---|---|---|---|---|---|
| 6037900103 | 14.65 | 24.29 | 20-25% | 6170 | Los Angeles | 16.4 | 76.3 | 7.3 | 55.3 | 30.8 | 10 | 0.5 | 1.2 | 2.2 |
| 6067009332 | 14.65 | 24.28 | 20-25% | 1425 | Sacramento | 12.8 | 75.5 | 11.7 | 13.3 | 48.1 | 2.9 | 0.1 | 31.3 | 4.3 |
| 6075015100 | 14.65 | 24.27 | 20-25% | 2493 | San Francisco | 1.2 | 66.3 | 32.5 | 6 | 60.9 | 2.6 | 0.2 | 26.2 | 4 |
| 6073019903 | 14.64 | 24.25 | 20-25% | 4371 | San Diego | 11.5 | 76.6 | 11.9 | 33 | 58.2 | 2.6 | 0.4 | 3.2 | 2.7 |
| 6095250105 | 14.64 | 24.24 | 20-25% | 6678 | Solano | 12 | 78 | 10 | 10.3 | 12.9 | 17.3 | 0.2 | 53.9 | 5.3 |
| 6111001401 | 14.63 | 24.23 | 20-25% | 3950 | Ventura | 12.6 | 71.9 | 15.5 | 24.1 | 67 | 0.6 | 0.6 | 4.8 | 2.8 |
| 6075022600 | 14.63 | 24.21 | 20-25% | 1534 | San Francisco | 5.2 | 92.1 | 2.7 | 8.6 | 69.2 | 4.1 | 0.2 | 14.2 | 3.7 |
| 6073020103 | 14.63 | 24.20 | 20-25% | 10235 | San Diego | 12.1 | 77.2 | 10.7 | 23.5 | 60.5 | 1.9 | 0.3 | 10.9 | 2.8 |
| 6073020305 | 14.62 | 24.19 | 20-25% | 5984 | San Diego | 11.7 | 72.4 | 15.9 | 26.8 | 59.7 | 2.7 | 0.5 | 7.9 | 2.5 |
| 6085504420 | 14.62 | 24.18 | 20-25% | 4555 | Santa Clara | 11.1 | 78.5 | 10.4 | 11.2 | 18.6 | 1.3 | 0.2 | 65.7 | 3 |
| 6067007207 | 14.62 | 24.16 | 20-25% | 4212 | Sacramento | 13.8 | 76.8 | 9.4 | 16.2 | 72.8 | 2.2 | 0.9 | 4.4 | 3.5 |
| 6081609202 | 14.62 | 24.15 | 20-25% | 3616 | San Mateo | 10 | 77 | 13 | 13.3 | 65.8 | 1.5 | 0.2 | 14.9 | 4.4 |
| 6067009404 | 14.62 | 24.14 | 20-25% | 5921 | Sacramento | 11.3 | 73.8 | 14.9 | 14.6 | 70.9 | 3.7 | 0.9 | 6.2 | 3.8 |
| 6073009802 | 14.61 | 24.13 | 20-25% | 6101 | San Diego | 11.1 | 74.3 | 14.6 | 17.2 | 65.8 | 5.3 | 0.4 | 6.7 | 4.5 |
| 6059021827 | 14.61 | 24.11 | 20-25% | 3028 | Orange | 10 | 82.3 | 7.7 | 13.6 | 61.8 | 1.4 | 0.1 | 19.8 | 3.3 |
| 6111005204 | 14.61 | 24.10 | 20-25% | 3367 | Ventura | 8.5 | 67.6 | 23.9 | 12.5 | 72.3 | 1 | 0.3 | 10.3 | 3.5 |
| 6065030601 | 14.60 | 24.09 | 20-25% | 5249 | Riverside | 7.7 | 78.4 | 13.9 | 16.5 | 62.7 | 5.8 | 0.4 | 11.3 | 3.3 |
| 6063000501 | 14.60 | 24.08 | 20-25% | 2146 | Plumas | 10.2 | 75.3 | 14.5 | 8.3 | 85.3 | 0.3 | 1.9 | 1.2 | 3 |
| 6037262704 | 14.60 | 24.06 | 20-25% | 3567 | Los Angeles | 11.6 | 70.3 | 18.1 | 5 | 87.1 | 0.9 | 0.1 | 4.4 | 2.5 |
| 6037403407 | 14.59 | 24.05 | 20-25% | 2132 | Los Angeles | 8.6 | 83.8 | 7.6 | 11.5 | 6.2 | 1.3 | 0 | 78.8 | 2 |
| 6067009312 | 14.59 | 24.04 | 20-25% | 6535 | Sacramento | 15.3 | 78.3 | 6.4 | 19.1 | 32.3 | 11 | 0.4 | 31.9 | 5.3 |
| 6059063004 | 14.58 | 24.03 | 20-25% | 5917 | Orange | 5.8 | 67.8 | 26.4 | 6.2 | 82.9 | 0.9 | 0.2 | 7.3 | 2.6 |
| 6055201004 | 14.58 | 24.01 | 20-25% | 6081 | Napa | 13.6 | 74.1 | 12.3 | 25.7 | 27.5 | 8.5 | 0.3 | 33.4 | 4.7 |
| 6059021822 | 14.58 | 24.00 | 20-25% | 7488 | Orange | 14.3 | 75 | 10.7 | 12.4 | 58.1 | 1.2 | 0.3 | 24.9 | 3 |
| 6085512005 | 14.58 | 23.99 | 20-25% | 6711 | Santa Clara | 13.5 | 74.5 | 12 | 24.9 | 49.8 | 2.9 | 0.3 | 18.4 | 3.6 |
| 6001422400 | 14.57 | 23.98 | 20-25% | 4196 | Alameda | 3.1 | 89.7 | 7.2 | 8.2 | 50.5 | 4.4 | 0.1 | 32.4 | 4.5 |
| 6055201500 | 14.56 | 23.96 | 20-25% | 1868 | Napa | 9 | 66.7 | 24.3 | 28.5 | 68.9 | 0.2 | 0.2 | 0.9 | 1.3 |
| 6061020717 | 14.56 | 23.95 | 20-25% | 3118 | Placer | 13 | 81 | 6 | 11.7 | 69.8 | 2.1 | 0.3 | 12.4 | 3.7 |
| 6053013000 | 14.55 | 23.94 | 20-25% | 2968 | Monterey | 6.7 | 75.3 | 18 | 10.4 | 72.5 | 2.5 | 0.7 | 8.8 | 5 |
| 6081607300 | 14.55 | 23.92 | 20-25% | 3529 | San Mateo | 12.7 | 67.8 | 19.5 | 9.3 | 67.8 | 0.8 | 0.1 | 17.7 | 4.4 |
| 6037408627 | 14.54 | 23.91 | 20-25% | 3079 | Los Angeles | 8.7 | 75.2 | 16.1 | 24.3 | 13.6 | 1.8 | 0 | 58.6 | 1.7 |
| 6077004303 | 14.54 | 23.90 | 20-25% | 4610 | San Joaquin | 9.6 | 66.9 | 23.5 | 13.7 | 78 | 0.5 | 0.3 | 5.4 | 2.1 |
| 6073013313 | 14.53 | 23.89 | 20-25% | 9464 | San Diego | 17.8 | 77 | 5.2 | 40.3 | 16.1 | 5.5 | 0.1 | 33.8 | 4.2 |
| 6083001901 | 14.53 | 23.87 | 20-25% | 7805 | Santa Barbara | 13.4 | 74.1 | 12.5 | 33.3 | 61 | 0.6 | 0.6 | 2.4 | 2.1 |
| 6097150304 | 14.52 | 23.86 | 20-25% | 6158 | Sonoma | 14.2 | 75.2 | 10.6 | 40.1 | 55.2 | 0.2 | 0.3 | 1.8 | 2.3 |
| 6067008704 | 14.52 | 23.85 | 20-25% | 3231 | Sacramento | 22.6 | 73.3 | 4.1 | 12.9 | 40.5 | 5.7 | 0.3 | 35.2 | 5.4 |
| 6089010602 | 14.51 | 23.84 | 20-25% | 5429 | Shasta | 12.2 | 72.2 | 15.6 | 6.2 | 83.7 | 1.2 | 1.7 | 3.8 | 3.5 |
| 6035040302 | 14.51 | 23.82 | 20-25% | 4422 | Lassen | 13 | 75.2 | 11.8 | 9.4 | 84 | 0.6 | 2.1 | 1.4 | 2.5 |
| 6037621326 | 14.50 | 23.81 | 20-25% | 3260 | Los Angeles | 6.7 | 81.7 | 11.6 | 9 | 77.1 | 2.3 | 0.2 | 8.6 | 2.9 |
| 6067009615 | 14.50 | 23.80 | 20-25% | 7864 | Sacramento | 14.7 | 78 | 7.3 | 21.5 | 38.4 | 13.8 | 0.3 | 19.5 | 6.5 |
| 6037901007 | 14.50 | 23.79 | 20-25% | 2258 | Los Angeles | 11.5 | 79.3 | 9.2 | 25.6 | 61.2 | 5 | 0.3 | 4.4 | 3.5 |
| 6111007903 | 14.49 | 23.77 | 20-25% | 4855 | Ventura | 15.8 | 74.9 | 9.3 | 16.2 | 63.2 | 1.9 | 0.2 | 14.6 | 3.8 |
| 6075022902 | 14.49 | 23.76 | 20-25% | 2617 | San Francisco | 9.9 | 80.6 | 9.5 | 53.6 | 32.1 | 2.2 | 0.2 | 9.8 | 2.3 |
| 6073008361 | 14.49 | 23.75 | 20-25% | 2642 | San Diego | 6.7 | 84.9 | 8.4 | 9.2 | 59.8 | 1.6 | 0 | 24.9 | 4.4 |
| 6067007106 | 14.49 | 23.74 | 20-25% | 7161 | Sacramento | 18.2 | 76.7 | 5.1 | 19.1 | 35.8 | 13 | 0.2 | 25.7 | 6.1 |
| 6073020109 | 14.49 | 23.72 | 20-25% | 5127 | San Diego | 15 | 77.4 | 7.6 | 57.1 | 32.9 | 1 | 0.4 | 7.1 | 1.5 |
| 6093000600 | 14.49 | 23.71 | 20-25% | 1847 | Siskiyou | 10.2 | 71.5 | 18.3 | 8.1 | 80.5 | 1.8 | 3.8 | 0.6 | 5.3 |
| 6037262100 | 14.48 | 23.70 | 20-25% | 3586 | Los Angeles | 10.1 | 66.9 | 23 | 5.7 | 82.5 | 1.3 | 0 | 6.6 | 3.9 |
| 6065048100 | 14.48 | 23.69 | 20-25% | 6404 | Riverside | 16.1 | 77.7 | 6.2 | 23.2 | 55.2 | 5.7 | 0.2 | 12.2 | 3.6 |
| 6053010305 | 14.48 | 23.67 | 20-25% | 4371 | Monterey | 11.6 | 77 | 11.4 | 35 | 57.4 | 0.9 | 0.5 | 2.9 | 3.3 |
| 6001428600 | 14.47 | 23.66 | 20-25% | 3271 | Alameda | 8.4 | 69.1 | 22.5 | 8.2 | 40.6 | 7.7 | 0.1 | 37.7 | 5.6 |
| 6095252107 | 14.47 | 23.65 | 20-25% | 3592 | Solano | 10.8 | 75.5 | 13.7 | 12.8 | 66.8 | 5.6 | 0.4 | 9 | 5.3 |
| 6109003200 | 14.47 | 23.63 | 20-25% | 5765 | Tuolumne | 10.9 | 74.2 | 14.9 | 9.8 | 82.3 | 0.3 | 3.9 | 0.9 | 2.8 |
| 6097152904 | 14.46 | 23.62 | 20-25% | 5095 | Sonoma | 13.4 | 76.8 | 9.8 | 24.2 | 64.2 | 1.9 | 0.8 | 5.4 | 3.4 |
| 6085504315 | 14.45 | 23.61 | 20-25% | 6562 | Santa Clara | 12.7 | 76.9 | 10.4 | 16.8 | 17.2 | 3.2 | 0.2 | 59.5 | 3 |
| 6001441523 | 14.45 | 23.60 | 20-25% | 4077 | Alameda | 22.8 | 72.7 | 4.5 | 6.2 | 11.3 | 2.4 | 0.3 | 75.1 | 4.7 |
| 6073018512 | 14.44 | 23.58 | 20-25% | 3397 | San Diego | 5 | 47.5 | 47.5 | 17.3 | 70.5 | 3.7 | 0.3 | 5 | 3.2 |
| 6067008404 | 14.44 | 23.57 | 20-25% | 3275 | Sacramento | 12.7 | 73.9 | 13.4 | 14.6 | 74.2 | 1.5 | 0.5 | 5.3 | 4 |
| 6059042103 | 14.43 | 23.56 | 20-25% | 7418 | Orange | 10.9 | 76.5 | 12.6 | 13.6 | 82.1 | 0.3 | 0.1 | 1.9 | 2 |
| 6073018613 | 14.42 | 23.55 | 20-25% | 3477 | San Diego | 16.1 | 77.5 | 6.4 | 37 | 40.4 | 8 | 0.6 | 8.7 | 5.4 |
| 6067008142 | 14.42 | 23.53 | 20-25% | 3353 | Sacramento | 13.7 | 77.8 | 8.5 | 19.8 | 69.8 | 3.2 | 0.7 | 3.2 | 3.4 |
| 6111008304 | 14.41 | 23.52 | 20-25% | 5484 | Ventura | 13.6 | 74.8 | 11.6 | 16.1 | 68.9 | 1.3 | 0.2 | 9.8 | 3.7 |
| 6095252106 | 14.41 | 23.51 | 20-25% | 4132 | Solano | 10 | 78.7 | 11.3 | 11 | 63.4 | 7.2 | 0.2 | 12.5 | 5.8 |
| 6037620102 | 14.40 | 23.50 | 20-25% | 3617 | Los Angeles | 9.9 | 80.9 | 9.2 | 14.1 | 71.5 | 1.9 | 0.3 | 7.8 | 4.5 |
| 6025940000 | 14.40 | 23.48 | 20-25% | 3052 | Imperial | 18 | 67.8 | 14.2 | 37.4 | 19.7 | 1.3 | 38.4 | 0.3 | 2.8 |
| 6065044807 | 14.40 | 23.47 | 20-25% | 1281 | Riverside | 5.2 | 68.1 | 26.7 | 15.1 | 74.2 | 2.5 | 0 | 6.1 | 2.2 |

| | | | | | | | | | | | | | | |
|---|---|---|---|---|---|---|---|---|---|---|---|---|---|---|
| 6037910807 | 14.40 | 23.46 | 20-25% | 5489 | Los Angeles | 13.2 | 79 | 7.8 | 27.7 | 55.3 | 5.6 | 0.3 | 7.7 | 3.3 |
| 6061021108 | 14.39 | 23.45 | 20-25% | 2668 | Placer | 12.1 | 69.3 | 18.6 | 13.8 | 79.3 | 0.6 | 1 | 2.4 | 3 |
| 6037301400 | 14.39 | 23.43 | 20-25% | 3865 | Los Angeles | 10.6 | 72.8 | 16.6 | 7.4 | 81.2 | 0.6 | 0 | 7.1 | 3.6 |
| 6067008600 | 14.38 | 23.42 | 20-25% | 6784 | Sacramento | 10.6 | 67.1 | 22.3 | 10.4 | 80.4 | 2.7 | 0.5 | 3.5 | 2.5 |
| 6061021501 | 14.38 | 23.41 | 20-25% | 5979 | Placer | 9.2 | 75.5 | 15.3 | 10.5 | 82.3 | 1.1 | 1.1 | 2.7 | 2.1 |
| 6067005801 | 14.38 | 23.40 | 20-25% | 5050 | Sacramento | 11 | 71.5 | 17.5 | 10.9 | 78.1 | 2.8 | 0.7 | 4.3 | 3.1 |
| 6001440332 | 14.38 | 23.38 | 20-25% | 3310 | Alameda | 15.2 | 77.5 | 7.3 | 6.3 | 8.3 | 3.6 | 0 | 77.4 | 4.5 |
| 6095252000 | 14.37 | 23.37 | 20-25% | 4157 | Solano | 7.9 | 69.8 | 22.3 | 10.3 | 77.9 | 2.5 | 0.3 | 5.1 | 3.9 |
| 6071000111 | 14.36 | 23.36 | 20-25% | 2580 | San Bernardino | 10.7 | 81.4 | 7.9 | 21.9 | 52.4 | 3.4 | 0.5 | 19.7 | 2.1 |
| 6019004302 | 14.36 | 23.34 | 20-25% | 4848 | Fresno | 7.3 | 64.5 | 28.2 | 15.7 | 72.8 | 2.9 | 0.2 | 5.9 | 2.5 |
| 6073008902 | 14.36 | 23.33 | 20-25% | 2221 | San Diego | 4.7 | 79 | 16.3 | 15.4 | 68.3 | 4.7 | 0.1 | 8.3 | 3.2 |
| 6077004703 | 14.36 | 23.32 | 20-25% | 3709 | San Joaquin | 12.5 | 72.5 | 15 | 24.8 | 69.7 | 0.4 | 0.5 | 1.8 | 2.7 |
| 6057001206 | 14.35 | 23.31 | 20-25% | 6090 | Nevada | 15 | 78.5 | 6.5 | 38.7 | 58.1 | 0.4 | 0.3 | 1.1 | 1.4 |
| 6037463500 | 14.35 | 23.29 | 20-25% | 5747 | Los Angeles | 5.8 | 82.9 | 11.3 | 12.2 | 48.5 | 3.5 | 0 | 31.9 | 3.8 |
| 6001450746 | 14.35 | 23.28 | 20-25% | 3152 | Alameda | 12.1 | 73.9 | 14 | 9 | 73.3 | 1.1 | 0.4 | 12.8 | 3.4 |
| 6029003203 | 14.35 | 23.27 | 20-25% | 2383 | Kern | 11.8 | 81.4 | 6.8 | 23 | 70.3 | 1.7 | 0.9 | 2.4 | 1.6 |
| 6065043229 | 14.34 | 23.26 | 20-25% | 5127 | Riverside | 6.4 | 46.7 | 46.9 | 13.4 | 76.9 | 2.5 | 0.2 | 4.8 | 2.2 |
| 6061020713 | 14.34 | 23.24 | 20-25% | 3222 | Placer | 10.1 | 63.6 | 26.3 | 16.6 | 74.1 | 2.9 | 0.4 | 2.9 | 3.2 |
| 6065043266 | 14.33 | 23.23 | 20-25% | 5215 | Riverside | 17.1 | 78.3 | 4.6 | 36.7 | 43.2 | 4.7 | 0.7 | 10.9 | 3.9 |
| 6057000802 | 14.33 | 23.22 | 20-25% | 6528 | Nevada | 7.9 | 69.8 | 22.3 | 5.9 | 88.9 | 0.5 | 0.6 | 1.3 | 2.8 |
| 6029003813 | 14.33 | 23.21 | 20-25% | 7613 | Kern | 14.5 | 76 | 9.5 | 21.3 | 64 | 3.3 | 0.5 | 8.4 | 2.5 |
| 6067007905 | 14.32 | 23.19 | 20-25% | 4225 | Sacramento | 10.7 | 69 | 20.3 | 8.6 | 81.2 | 2.1 | 0.4 | 4.3 | 3.5 |
| 6059110004 | 14.31 | 23.18 | 20-25% | 4703 | Orange | 10.7 | 71.7 | 17.6 | 15.1 | 70.2 | 0.7 | 0.3 | 10.8 | 2.9 |
| 6083003004 | 14.31 | 23.17 | 20-25% | 4874 | Santa Barbara | 9.9 | 74.3 | 15.8 | 34 | 56.2 | 1 | 0.3 | 5.9 | 2.6 |
| 6095252801 | 14.31 | 23.16 | 20-25% | 2455 | Solano | 30.8 | 69 | 0.2 | 15.3 | 57.1 | 10.7 | 0.2 | 8 | 8.6 |
| 6067001600 | 14.30 | 23.14 | 20-25% | 5421 | Sacramento | 10.7 | 74.9 | 14.4 | 13.1 | 76.1 | 2.2 | 0.3 | 4.4 | 3.9 |
| 6111008005 | 14.30 | 23.13 | 20-25% | 2788 | Ventura | 13.2 | 77.7 | 9.1 | 41.7 | 50.5 | 1 | 0.5 | 3.9 | 2.5 |
| 6065044925 | 14.30 | 23.12 | 20-25% | 3477 | Riverside | 15.1 | 75.4 | 9.5 | 62.3 | 27.2 | 2.8 | 0.5 | 6.6 | 0.7 |
| 6075047802 | 14.28 | 23.11 | 20-25% | 3656 | San Francisco | 7.4 | 76.8 | 15.8 | 5.9 | 37.6 | 1.4 | 0.2 | 50.6 | 4.2 |
| 6059001706 | 14.27 | 23.09 | 20-25% | 3869 | Orange | 7.6 | 65.5 | 26.9 | 10 | 60.5 | 1.5 | 0.1 | 24.6 | 3.3 |
| 6081601604 | 14.27 | 23.08 | 20-25% | 2510 | San Mateo | 9.5 | 80 | 10.5 | 16.7 | 27.2 | 4.1 | 0 | 47.9 | 4 |
| 6085502800 | 14.27 | 23.07 | 20-25% | 4102 | Santa Clara | 14.1 | 74.6 | 11.3 | 19.5 | 64.1 | 1.1 | 0.4 | 10.7 | 4.2 |
| 6067008124 | 14.25 | 23.05 | 20-25% | 4478 | Sacramento | 11.6 | 74 | 14.4 | 9.9 | 81.7 | 1.7 | 0.6 | 2.9 | 3.2 |
| 6037430802 | 14.24 | 23.04 | 20-25% | 4163 | Los Angeles | 10.2 | 73.5 | 16.3 | 9 | 25 | 0.4 | 0.1 | 63.1 | 2.5 |
| 6023010600 | 14.24 | 23.03 | 20-25% | 1798 | Humboldt | 8.1 | 74.9 | 17 | 3.2 | 90 | 0.4 | 1.8 | 0.9 | 3.7 |
| 6067007105 | 14.23 | 23.02 | 20-25% | 6725 | Sacramento | 20.7 | 75.6 | 3.7 | 19.7 | 33.8 | 14.7 | 0.3 | 25 | 6.5 |
| 6045011200 | 14.23 | 23.00 | 20-25% | 3293 | Mendocino | 12.6 | 73.6 | 13.8 | 38.1 | 58.4 | 0.5 | 0.8 | 0.6 | 1.7 |
| 6085506503 | 14.22 | 22.99 | 20-25% | 6045 | Santa Clara | 12 | 74.5 | 13.5 | 24.6 | 50.5 | 4 | 0.3 | 16.5 | 4.2 |
| 6037214700 | 14.22 | 22.98 | 20-25% | 2512 | Los Angeles | 8.3 | 76.5 | 15.2 | 9.3 | 79 | 2.8 | 0.1 | 6 | 2.7 |
| 6007000102 | 14.22 | 22.97 | 20-25% | 3900 | Butte | 11.1 | 70.3 | 18.6 | 12.2 | 79.3 | 1.3 | 0.9 | 3 | 3.3 |
| 6001423602 | 14.21 | 22.95 | 20-25% | 5659 | Alameda | 1.9 | 94.4 | 3.7 | 8.9 | 42.8 | 2.5 | 0.2 | 40.6 | 5.1 |
| 6067008120 | 14.20 | 22.94 | 20-25% | 4873 | Sacramento | 11.8 | 78.3 | 9.9 | 15.7 | 72 | 3.3 | 0.7 | 4.5 | 3.9 |
| 6085506302 | 14.20 | 22.93 | 20-25% | 6388 | Santa Clara | 12.9 | 76.5 | 10.6 | 19.6 | 52.1 | 3.6 | 0.2 | 20.5 | 4.1 |
| 6065941300 | 14.19 | 22.92 | 20-25% | 3300 | Riverside | 6.4 | 73.1 | 20.5 | 18.5 | 69.5 | 4.2 | 0.5 | 4.7 | 2.5 |
| 6073010011 | 14.19 | 22.90 | 20-25% | 3633 | San Diego | 11.6 | 74.8 | 13.6 | 61.1 | 11.1 | 5.7 | 0.1 | 18.2 | 3.8 |
| 6075025600 | 14.19 | 22.89 | 20-25% | 5618 | San Francisco | 9.6 | 75.3 | 15.1 | 28 | 12.7 | 2.4 | 0.2 | 54 | 2.8 |
| 6111007505 | 14.18 | 22.88 | 20-25% | 3324 | Ventura | 10.1 | 76.1 | 13.8 | 21.4 | 70.7 | 0.7 | 0.4 | 4.3 | 2.5 |
| 6059021828 | 14.18 | 22.87 | 20-25% | 4362 | Orange | 9.7 | 84.3 | 6 | 12.1 | 60.8 | 1.8 | 0.1 | 21.3 | 4 |
| 6071008302 | 14.17 | 22.85 | 20-25% | 3106 | San Bernardino | 9.2 | 71.5 | 19.3 | 15 | 76.1 | 1.5 | 0.3 | 5 | 2.2 |
| 6111001900 | 14.16 | 22.84 | 20-25% | 3822 | Ventura | 11 | 73.1 | 15.9 | 16.7 | 75.9 | 0.8 | 0.5 | 2.8 | 3.3 |
| 6001423901 | 14.16 | 22.83 | 20-25% | 2020 | Alameda | 8.6 | 81.3 | 10.1 | 10.9 | 54.7 | 20.8 | 0.3 | 7.5 | 5.7 |
| 6019006402 | 14.16 | 22.81 | 20-25% | 2973 | Fresno | 11 | 71.1 | 17.9 | 9 | 77.3 | 0.2 | 10.8 | 0.6 | 2.2 |
| 6081608501 | 14.15 | 22.80 | 20-25% | 4829 | San Mateo | 14.5 | 74.9 | 10.6 | 26.5 | 52.9 | 1.6 | 0.2 | 14.3 | 4.4 |
| 6065043272 | 14.15 | 22.79 | 20-25% | 4976 | Riverside | 10.3 | 72.7 | 17 | 16.2 | 75 | 2.1 | 0.6 | 3.8 | 2.2 |
| 6113011204 | 14.15 | 22.78 | 20-25% | 4672 | Yolo | 13.6 | 72.4 | 14 | 37.9 | 55.7 | 0.9 | 0.7 | 3.1 | 1.7 |
| 6059075813 | 14.14 | 22.76 | 20-25% | 5069 | Orange | 10.3 | 75.2 | 14.5 | 25 | 56.1 | 0.5 | 0.4 | 15 | 3 |
| 6113011500 | 14.14 | 22.75 | 20-25% | 5325 | Yolo | 13 | 74.5 | 12.5 | 43.8 | 48.1 | 1.7 | 1.5 | 2.9 | 2 |
| 6053010202 | 14.13 | 22.74 | 20-25% | 4386 | Monterey | 13.9 | 75.6 | 10.5 | 53.1 | 41.4 | 0.3 | 0.5 | 2.5 | 2.2 |
| 6073017809 | 14.13 | 22.73 | 20-25% | 2293 | San Diego | 9.7 | 75.8 | 14.5 | 15.1 | 78.5 | 0.2 | 0.3 | 2.4 | 3.4 |
| 6037920118 | 14.12 | 22.71 | 20-25% | 6117 | Los Angeles | 16.8 | 78.4 | 4.8 | 23.1 | 55 | 3.7 | 0.1 | 14.9 | 3.2 |
| 6075015200 | 14.11 | 22.70 | 20-25% | 3934 | San Francisco | 4.7 | 72.3 | 23 | 6.7 | 60.1 | 3.6 | 0.3 | 25 | 4.4 |
| 6039000108 | 14.11 | 22.69 | 20-25% | 7068 | Madera | 8.6 | 64.8 | 26.6 | 8.8 | 83.4 | 0.4 | 3.4 | 0.8 | 3.2 |
| 6017030602 | 14.09 | 22.68 | 20-25% | 6781 | El Dorado | 8.7 | 73.8 | 17.5 | 7.1 | 86.6 | 1.1 | 1.2 | 0.9 | 3.1 |
| 6001450741 | 14.07 | 22.66 | 20-25% | 4768 | Alameda | 13.3 | 71.9 | 14.8 | 18 | 63.8 | 1.9 | 0.4 | 12.4 | 3.5 |
| 6085503331 | 14.07 | 22.65 | 20-25% | 3173 | Santa Clara | 8.1 | 64.4 | 27.5 | 20.6 | 40.2 | 3.8 | 0.4 | 32 | 3.1 |
| 6067008402 | 14.06 | 22.64 | 20-25% | 5505 | Sacramento | 12.1 | 75.3 | 12.6 | 13.8 | 78.3 | 0.8 | 0.5 | 3.1 | 3.5 |

| | | | | | | | | | | | | | | | |
|---|---|---|---|---|---|---|---|---|---|---|---|---|---|---|---|
| 6079012304 | 14.06 | 22.63 | 20-25% | 8954 | San Luis Obispo | 9 | 67.6 | 23.4 | 19.6 | 74.2 | 0.8 | 0.4 | 2.9 | 2.1 |
| 6085512037 | 14.05 | 22.61 | 20-25% | 3214 | Santa Clara | 13.3 | 76.9 | 9.8 | 30.4 | 45.6 | 3.7 | 0 | 15.5 | 4.7 |
| 6089011300 | 14.05 | 22.60 | 20-25% | 5073 | Shasta | 15.4 | 72.1 | 12.5 | 11.2 | 76.3 | 1.5 | 2.5 | 4.8 | 3.8 |
| 6045010100 | 14.04 | 22.59 | 20-25% | 2587 | Mendocino | 14.6 | 70.9 | 14.5 | 11.8 | 42.6 | 1.2 | 37.5 | 0.5 | 6.4 |
| 6081607800 | 14.04 | 22.58 | 20-25% | 3160 | San Mateo | 11.5 | 73.2 | 15.3 | 26.2 | 42.4 | 1.1 | 0.3 | 24.4 | 5.5 |
| 6037400204 | 14.03 | 22.56 | 20-25% | 6454 | Los Angeles | 8.4 | 78.6 | 13 | 19 | 64.3 | 3.4 | 0.3 | 10.5 | 2.5 |
| 6065030603 | 14.03 | 22.55 | 20-25% | 2978 | Riverside | 8.8 | 71.2 | 20 | 15.4 | 77.3 | 2.5 | 0.2 | 2.5 | 2.1 |
| 6073020805 | 14.03 | 22.54 | 20-25% | 3501 | San Diego | 12.8 | 78.3 | 8.9 | 35 | 59.5 | 0.9 | 0.7 | 1.8 | 2.1 |
| 6067008005 | 14.03 | 22.52 | 20-25% | 4715 | Sacramento | 9.1 | 72.4 | 18.5 | 8.6 | 81.5 | 1.2 | 0.6 | 5.1 | 3 |
| 6081604000 | 14.02 | 22.51 | 20-25% | 3160 | San Mateo | 13.2 | 72.3 | 14.5 | 20.3 | 56.3 | 1 | 0.2 | 18.1 | 4.1 |
| 6113010510 | 14.01 | 22.50 | 20-25% | 5267 | Yolo | 4.9 | 85.6 | 9.5 | 11.1 | 58.5 | 1.6 | 0.1 | 24.3 | 4.4 |
| 6001441302 | 14.01 | 22.49 | 20-25% | 5553 | Alameda | 14.1 | 72.2 | 13.7 | 15.5 | 33.9 | 3.7 | 0.2 | 40.9 | 5.9 |
| 6097152201 | 14.00 | 22.47 | 20-25% | 3846 | Sonoma | 10.6 | 82.1 | 7.3 | 18.3 | 70.1 | 3.1 | 1.1 | 3.5 | 3.9 |
| 6073020105 | 14.00 | 22.46 | 20-25% | 3801 | San Diego | 12.9 | 76 | 11.1 | 29.5 | 59.6 | 3.1 | 0.8 | 4.8 | 2.2 |
| 6065941000 | 14.00 | 22.45 | 20-25% | 3812 | Riverside | 4.8 | 50.1 | 45.1 | 14.3 | 79.2 | 3.1 | 0.2 | 1.7 | 1.4 |
| 6065043262 | 14.00 | 22.44 | 20-25% | 5122 | Riverside | 11.9 | 76.9 | 11.2 | 18.3 | 70.6 | 2.4 | 0.7 | 4.6 | 3.5 |
| 6065045304 | 14.00 | 22.42 | 20-25% | 8675 | Riverside | 19.4 | 75.3 | 5.3 | 58.3 | 33.2 | 2.2 | 0.6 | 4 | 1.7 |
| 6037901004 | 13.99 | 22.41 | 20-25% | 12544 | Los Angeles | 16.7 | 77 | 6.3 | 32.3 | 39.1 | 16.2 | 0.4 | 8.8 | 3.3 |
| 6037800203 | 13.99 | 22.40 | 20-25% | 5643 | Los Angeles | 10.6 | 77.7 | 11.7 | 7.4 | 80.9 | 1.7 | 0.2 | 6.5 | 3.3 |
| 6073004300 | 13.99 | 22.39 | 20-25% | 3665 | San Diego | 9.4 | 82.5 | 8.1 | 21.2 | 66.3 | 4.6 | 0.4 | 3.4 | 4.1 |
| 6053013800 | 13.99 | 22.37 | 20-25% | 5548 | Monterey | 12.6 | 74.8 | 12.6 | 44.8 | 17.2 | 16.6 | 0.3 | 15 | 6.2 |
| 6085503329 | 13.99 | 22.36 | 20-25% | 3461 | Santa Clara | 16.4 | 75.6 | 8 | 14.3 | 15.1 | 2.3 | 0.1 | 65.1 | 3.1 |
| 6089011001 | 13.98 | 22.35 | 20-25% | 1668 | Shasta | 9.7 | 76.2 | 14.1 | 4.4 | 87.2 | 0.5 | 1.9 | 2.3 | 3.7 |
| 6037462600 | 13.97 | 22.34 | 20-25% | 2324 | Los Angeles | 11.9 | 72.8 | 15.3 | 19 | 60.5 | 5 | 0.1 | 11.4 | 4 |
| 6073013415 | 13.96 | 22.32 | 20-25% | 1567 | San Diego | 12.3 | 74.2 | 13.5 | 49.7 | 30.1 | 4.5 | 0.2 | 12.6 | 2.9 |
| 6075045100 | 13.95 | 22.31 | 20-25% | 4996 | San Francisco | 7.5 | 80.1 | 12.4 | 6.7 | 40.1 | 2 | 0.1 | 46.8 | 4.3 |
| 6065044924 | 13.95 | 22.30 | 20-25% | 3984 | Riverside | 13.9 | 78.4 | 7.7 | 57 | 32.4 | 3 | 0.4 | 4.7 | 2.5 |
| 6075015400 | 13.95 | 22.29 | 20-25% | 5621 | San Francisco | 8.9 | 77.1 | 14 | 6.5 | 64.5 | 2.7 | 0.1 | 22.5 | 3.7 |
| 6007002000 | 13.94 | 22.27 | 20-25% | 5184 | Butte | 9.5 | 67.4 | 23.1 | 6.8 | 86.9 | 0.4 | 1 | 1.3 | 3.5 |
| 6037571200 | 13.93 | 22.26 | 20-25% | 7828 | Los Angeles | 9.9 | 77.2 | 12.9 | 25 | 54.2 | 6 | 0.3 | 11.1 | 3.5 |
| 6073018609 | 13.92 | 22.25 | 20-25% | 6133 | San Diego | 15.5 | 77.5 | 7 | 52.6 | 28.7 | 5.9 | 0.3 | 8.9 | 3.7 |
| 6061021046 | 13.92 | 22.23 | 20-25% | 4754 | Placer | 12.7 | 72.9 | 14.4 | 15.4 | 69.3 | 2.1 | 0.5 | 9.3 | 3.4 |
| 6065940700 | 13.92 | 22.22 | 20-25% | 2613 | Riverside | 5.7 | 54.4 | 39.9 | 13.5 | 79.3 | 1.8 | 0.7 | 3.3 | 1.5 |
| 6045011102 | 13.91 | 22.21 | 20-25% | 3915 | Mendocino | 9.6 | 71 | 19.4 | 20.1 | 72.6 | 0.3 | 3.7 | 0.7 | 2.7 |
| 6013304005 | 13.90 | 22.20 | 20-25% | 6738 | Contra Costa | 19.6 | 76.4 | 4 | 21.6 | 62.3 | 5.9 | 0.4 | 5.6 | 4.1 |
| 6065044923 | 13.88 | 22.18 | 20-25% | 3615 | Riverside | 13.9 | 77.6 | 8.5 | 51.5 | 37.7 | 2.6 | 0.6 | 5.8 | 1.7 |
| 6073020903 | 13.88 | 22.17 | 20-25% | 3192 | San Diego | 7.9 | 70.4 | 21.7 | 14.6 | 64.3 | 1.3 | 15.6 | 1.6 | 2.5 |
| 6051000200 | 13.88 | 22.16 | 20-25% | 8237 | Mono | 12.2 | 81.3 | 6.5 | 33.7 | 62.4 | 0.4 | 0.4 | 1.6 | 1.5 |
| 6065045121 | 13.87 | 22.15 | 20-25% | 5457 | Riverside | 7.2 | 56 | 36.8 | 14.6 | 79.5 | 1.5 | 0.1 | 3 | 1.3 |
| 6037503602 | 13.87 | 22.13 | 20-25% | 3793 | Los Angeles | 9.2 | 72.4 | 18.4 | 36.6 | 48.8 | 1.4 | 0.2 | 11.3 | 1.7 |
| 6113010703 | 13.87 | 22.12 | 20-25% | 5854 | Yolo | 2.8 | 89.4 | 7.8 | 11.1 | 49 | 1.4 | 0.2 | 33.3 | 5 |
| 6001423902 | 13.87 | 22.11 | 20-25% | 1552 | Alameda | 7.8 | 79.6 | 12.6 | 8.6 | 72.4 | 3.4 | 0.3 | 9.7 | 5.6 |
| 6059021919 | 13.86 | 22.10 | 20-25% | 2662 | Orange | 9.5 | 74 | 16.5 | 13.1 | 67.3 | 1.9 | 0.2 | 13.8 | 3.6 |
| 6071002031 | 13.85 | 22.08 | 20-25% | 6281 | San Bernardino | 12.6 | 82 | 5.4 | 30.1 | 41.4 | 8.4 | 0.2 | 16.4 | 3.6 |
| 6019005702 | 13.85 | 22.07 | 20-25% | 5243 | Fresno | 12.6 | 78.2 | 9.2 | 19.5 | 67.3 | 1.4 | 0.8 | 8 | 3 |
| 6087100600 | 13.85 | 22.06 | 20-25% | 3341 | Santa Cruz | 9.3 | 81.2 | 9.5 | 12.4 | 76.4 | 0.8 | 0.3 | 5.8 | 4.2 |
| 6037500201 | 13.85 | 22.05 | 20-25% | 6179 | Los Angeles | 10.5 | 70.9 | 18.6 | 37.2 | 53.7 | 0.6 | 0.1 | 6.7 | 1.7 |
| 6089010703 | 13.84 | 22.03 | 20-25% | 3240 | Shasta | 9.1 | 71.6 | 19.3 | 8.1 | 81.7 | 1.6 | 1.5 | 3.9 | 3.3 |
| 6097150702 | 13.84 | 22.02 | 20-25% | 4552 | Sonoma | 11.1 | 73.5 | 15.4 | 7.5 | 86 | 0.6 | 0.1 | 3 | 2.8 |
| 6037577604 | 13.84 | 22.01 | 20-25% | 1388 | Los Angeles | 5.4 | 68.2 | 26.4 | 9.2 | 78.6 | 2.5 | 0.1 | 6.2 | 3.3 |
| 6037461200 | 13.82 | 22.00 | 20-25% | 4443 | Los Angeles | 11.3 | 71.6 | 17.1 | 14.1 | 65.7 | 9.5 | 0.2 | 6.2 | 4.3 |
| 6073021302 | 13.81 | 21.98 | 20-25% | 7361 | San Diego | 5.5 | 85.8 | 8.7 | 34.4 | 51.7 | 9 | 0.4 | 2.8 | 1.8 |
| 6085504415 | 13.80 | 21.97 | 20-25% | 5116 | Santa Clara | 14.8 | 74.7 | 10.5 | 11.5 | 18 | 1.9 | 0.1 | 65.2 | 3.3 |
| 6051000102 | 13.80 | 21.96 | 20-25% | 2502 | Mono | 13.7 | 69.2 | 17.1 | 21.4 | 70.2 | 0.4 | 5.1 | 0.8 | 2.1 |
| 6085502604 | 13.80 | 21.94 | 20-25% | 4320 | Santa Clara | 10.5 | 81.6 | 7.9 | 22.9 | 54.6 | 4 | 0.3 | 14.3 | 3.8 |
| 6081608004 | 13.79 | 21.93 | 20-25% | 6521 | San Mateo | 14.3 | 72.3 | 13.4 | 6 | 38.8 | 1.5 | 0.1 | 49.4 | 4.3 |
| 6019005508 | 13.79 | 21.92 | 20-25% | 5796 | Fresno | 15.9 | 74.8 | 9.3 | 15.5 | 55.6 | 3.6 | 0.4 | 21.1 | 3.7 |
| 6023010300 | 13.79 | 21.91 | 20-25% | 3607 | Humboldt | 10.4 | 77.2 | 12.4 | 5 | 84.5 | 0.4 | 4.9 | 0.9 | 4.3 |
| 6085512045 | 13.78 | 21.89 | 20-25% | 5602 | Santa Clara | 12.4 | 76.3 | 11.3 | 25.8 | 53.2 | 2.1 | 0.3 | 14.6 | 4 |
| 6065044916 | 13.78 | 21.88 | 20-25% | 4650 | Riverside | 13.5 | 70 | 16.5 | 49.9 | 41.2 | 2.6 | 0.6 | 4 | 1.7 |
| 6037651402 | 13.76 | 21.87 | 20-25% | 6050 | Los Angeles | 11.8 | 75.5 | 12.7 | 10.7 | 45.1 | 1.6 | 0.1 | 37.9 | 4.6 |
| 6073009106 | 13.76 | 21.86 | 20-25% | 3882 | San Diego | 4.4 | 88.1 | 7.5 | 17.3 | 70.5 | 1.7 | 0.4 | 6.1 | 4 |
| 6065043246 | 13.75 | 21.84 | 20-25% | 5906 | Riverside | 16.5 | 74.5 | 9 | 18 | 66.8 | 2.9 | 0.3 | 8.4 | 3.5 |
| 6059099306 | 13.74 | 21.83 | 20-25% | 6028 | Orange | 10.4 | 83.6 | 6 | 12.2 | 77.1 | 0.5 | 0.3 | 6.1 | 3.8 |
| 6073017048 | 13.73 | 21.82 | 20-25% | 6123 | San Diego | 14.6 | 76.7 | 8.7 | 28.2 | 50.8 | 2.7 | 0.4 | 14.3 | 3.7 |
| 6037920339 | 13.73 | 21.81 | 20-25% | 7377 | Los Angeles | 17 | 78.3 | 4.7 | 13.5 | 52.3 | 3.1 | 0.2 | 26.6 | 4.3 |

| | | | | | | | | | | | | | | |
|---|---|---|---|---|---|---|---|---|---|---|---|---|---|---|
| 6017031000 | 13.72 | 21.79 | 20-25% | 6061 | El Dorado | 12 | 70.7 | 17.3 | 20.1 | 75.4 | 0.6 | 0.9 | 1 | 2.1 |
| 6059042315 | 13.72 | 21.78 | 20-25% | 5900 | Orange | 10.7 | 77.7 | 11.6 | 15.2 | 72.5 | 1.4 | 0.1 | 7.3 | 3.5 |
| 6013324001 | 13.72 | 21.77 | 20-25% | 4615 | Contra Costa | 9 | 77 | 14 | 13.5 | 57.4 | 3.8 | 0.2 | 19.9 | 5.2 |
| 6037620001 | 13.71 | 21.76 | 20-25% | 3943 | Los Angeles | 10 | 78.7 | 11.3 | 15.4 | 70.3 | 1.8 | 0.2 | 8.2 | 4.1 |
| 6037701601 | 13.71 | 21.74 | 20-25% | 4165 | Los Angeles | 11.2 | 72.4 | 16.4 | 5.4 | 77.2 | 1.1 | 0 | 10.5 | 5.9 |
| 6097153705 | 13.71 | 21.73 | 20-25% | 3536 | Sonoma | 7.9 | 78 | 14.1 | 11.3 | 82.8 | 0.8 | 0.8 | 1.8 | 2.5 |
| 6079010201 | 13.71 | 21.72 | 20-25% | 6981 | San Luis Obispo | 13.9 | 66.7 | 19.4 | 18.8 | 74.4 | 1.6 | 0.4 | 2.2 | 2.6 |
| 6015000105 | 13.69 | 21.71 | 20-25% | 6967 | Del Norte | 13.1 | 72.7 | 14.2 | 11.7 | 73.2 | 0.4 | 5.3 | 4.9 | 4.4 |
| 6037920331 | 13.69 | 21.69 | 20-25% | 4075 | Los Angeles | 11.3 | 74.3 | 14.4 | 19 | 67.3 | 2 | 0 | 8.5 | 3.1 |
| 6001450751 | 13.69 | 21.68 | 20-25% | 2115 | Alameda | 22.3 | 73 | 4.7 | 6.8 | 31.8 | 3.6 | 0 | 53.9 | 4 |
| 6037400206 | 13.68 | 21.67 | 20-25% | 5328 | Los Angeles | 9.4 | 72.6 | 18 | 17.5 | 60.5 | 2.6 | 0.2 | 16 | 3.2 |
| 6111005404 | 13.68 | 21.65 | 20-25% | 3870 | Ventura | 11.5 | 73.9 | 14.6 | 31.2 | 57.7 | 1.9 | 0.3 | 6 | 2.9 |
| 6081603802 | 13.68 | 21.64 | 20-25% | 5056 | San Mateo | 11.2 | 71.1 | 17.7 | 17 | 53.4 | 1.8 | 0.1 | 23.4 | 4.3 |
| 6071011403 | 13.68 | 21.63 | 20-25% | 3350 | San Bernardino | 11.4 | 72.3 | 16.3 | 15.8 | 78.2 | 0.5 | 1.3 | 0.9 | 3.3 |
| 6097151307 | 13.67 | 21.62 | 20-25% | 5174 | Sonoma | 10.8 | 79.3 | 9.9 | 15.3 | 72.9 | 1.3 | 0.5 | 6.5 | 3.6 |
| 6075035300 | 13.67 | 21.60 | 20-25% | 7226 | San Francisco | 8.3 | 74.6 | 17.1 | 5.6 | 27 | 0.7 | 0.1 | 63.8 | 2.8 |
| 6059099310 | 13.65 | 21.59 | 20-25% | 4482 | Orange | 7.5 | 85.4 | 7.1 | 9.9 | 79.2 | 0.7 | 0.3 | 6.3 | 3.5 |
| 6061021322 | 13.65 | 21.58 | 20-25% | 8762 | Placer | 19.8 | 69.7 | 10.5 | 11.1 | 65.5 | 2.3 | 0.4 | 16.5 | 4.1 |
| 6001422700 | 13.64 | 21.57 | 20-25% | 4885 | Alameda | 2 | 96.2 | 1.8 | 10.2 | 52.6 | 2.3 | 0.2 | 29.2 | 5.5 |
| 6075026302 | 13.64 | 21.55 | 20-25% | 4992 | San Francisco | 9.5 | 76.9 | 13.6 | 25.2 | 13.9 | 4 | 0.1 | 54.5 | 2.2 |
| 6085510801 | 13.62 | 21.54 | 20-25% | 5290 | Santa Clara | 12.7 | 68.3 | 19 | 3.7 | 52.8 | 0.9 | 0 | 38.8 | 3.8 |
| 6037574300 | 13.62 | 21.53 | 20-25% | 5795 | Los Angeles | 11 | 73.5 | 15.5 | 15.8 | 68.9 | 2.5 | 0.1 | 8.9 | 3.9 |
| 6013359204 | 13.60 | 21.52 | 20-25% | 4702 | Contra Costa | 8.7 | 78.7 | 12.6 | 15.5 | 14.5 | 15.2 | 0.2 | 50.7 | 3.9 |
| 6095253106 | 13.59 | 21.50 | 20-25% | 3296 | Solano | 15 | 78.5 | 6.5 | 26.2 | 53.4 | 9.2 | 0.6 | 5.4 | 5.3 |
| 6029005403 | 13.59 | 21.49 | 20-25% | 8379 | Kern | 15.6 | 73.3 | 11.1 | 20 | 67.1 | 3.6 | 1 | 4.7 | 3.7 |
| 6073021600 | 13.59 | 21.48 | 20-25% | 3391 | San Diego | 13.5 | 73.2 | 13.3 | 15.8 | 71.5 | 4.7 | 0.6 | 3.5 | 3.9 |
| 6067009632 | 13.58 | 21.47 | 20-25% | 6811 | Sacramento | 19 | 74.7 | 6.3 | 17.1 | 25.8 | 13.4 | 0.1 | 37.3 | 6.3 |
| 6061021103 | 13.58 | 21.45 | 20-25% | 3797 | Placer | 14.5 | 75.2 | 10.3 | 18 | 74 | 1 | 0.7 | 2.5 | 3.8 |
| 6037265601 | 13.58 | 21.44 | 20-25% | 2890 | Los Angeles | 11.6 | 72.4 | 16 | 5.8 | 74.7 | 0.9 | 0.1 | 13.3 | 5.3 |
| 6087100800 | 13.57 | 21.43 | 20-25% | 6873 | Santa Cruz | 9.4 | 84.3 | 6.3 | 27.2 | 63.2 | 1.4 | 0.3 | 3.9 | 3.9 |
| 6075025300 | 13.57 | 21.42 | 20-25% | 4362 | San Francisco | 9.7 | 81.5 | 8.8 | 28.6 | 53.4 | 2.5 | 0.3 | 11.6 | 3.6 |
| 6067007431 | 13.57 | 21.40 | 20-25% | 3355 | Sacramento | 13.6 | 79.6 | 6.8 | 14.5 | 55 | 7.2 | 0.5 | 17.4 | 5.3 |
| 6057000702 | 13.57 | 21.39 | 20-25% | 3968 | Nevada | 7 | 72.1 | 20.9 | 5.8 | 89.2 | 0.2 | 1 | 1.1 | 2.7 |
| 6037403405 | 13.56 | 21.38 | 20-25% | 1631 | Los Angeles | 7.7 | 80.9 | 11.4 | 13.9 | 14.2 | 1 | 0.1 | 67.7 | 3 |
| 6073008357 | 13.55 | 21.36 | 20-25% | 4345 | San Diego | 11 | 79.5 | 9.5 | 12 | 21.8 | 3.4 | 0.2 | 57.7 | 4.9 |
| 6037264103 | 13.54 | 21.35 | 20-25% | 2319 | Los Angeles | 5.6 | 82.6 | 11.8 | 5 | 78.1 | 1.5 | 0.2 | 11.2 | 3.9 |
| 6059099513 | 13.53 | 21.34 | 20-25% | 2141 | Orange | 4.5 | 71.3 | 24.2 | 8.5 | 80.1 | 1.2 | 0.2 | 7.6 | 2.4 |
| 6085502701 | 13.51 | 21.33 | 20-25% | 4874 | Santa Clara | 13.5 | 73.9 | 12.6 | 20 | 59.1 | 2.6 | 0.3 | 13.8 | 4.2 |
| 6037920020 | 13.50 | 21.31 | 20-25% | 6954 | Los Angeles | 12.8 | 78.7 | 8.5 | 22.5 | 67.1 | 1.9 | 0.2 | 5 | 3.2 |
| 6095253206 | 13.50 | 21.30 | 20-25% | 3102 | Solano | 16.4 | 77.2 | 6.4 | 16.8 | 65.2 | 4.2 | 0.2 | 8.4 | 5.2 |
| 6085504202 | 13.49 | 21.29 | 20-25% | 4530 | Santa Clara | 10.2 | 74.3 | 15.5 | 32.4 | 39.4 | 3.3 | 0.1 | 21.7 | 3.2 |
| 6111008305 | 13.49 | 21.28 | 20-25% | 3819 | Ventura | 12.9 | 79.5 | 7.6 | 11.3 | 65.7 | 1.5 | 0.1 | 18 | 3.5 |
| 6017030401 | 13.49 | 21.26 | 20-25% | 3498 | El Dorado | 8 | 76.9 | 15.1 | 12.5 | 81.8 | 0.4 | 0.6 | 2.5 | 2.2 |
| 6095252315 | 13.48 | 21.25 | 20-25% | 4393 | Solano | 11.3 | 78.5 | 10.2 | 19.5 | 36.3 | 16.6 | 0.3 | 20.3 | 7.1 |
| 6095252915 | 13.47 | 21.24 | 20-25% | 3506 | Solano | 13.2 | 81.9 | 4.9 | 15 | 49.8 | 10.2 | 0.4 | 17.3 | 7.2 |
| 6073013421 | 13.47 | 21.23 | 20-25% | 4695 | San Diego | 11 | 79.8 | 9.2 | 50.1 | 19.1 | 3.7 | 0.1 | 24.3 | 2.6 |
| 6073013506 | 13.47 | 21.21 | 20-25% | 3509 | San Diego | 12.7 | 78 | 9.3 | 34.6 | 48.4 | 6.3 | 0.3 | 6.7 | 3.6 |
| 6067008203 | 13.47 | 21.20 | 20-25% | 4760 | Sacramento | 9.7 | 73.9 | 16.4 | 8.4 | 84.1 | 0.7 | 0.6 | 2.9 | 3.4 |
| 6043000302 | 13.47 | 21.19 | 20-25% | 2706 | Mariposa | 8.8 | 68.7 | 22.5 | 11.3 | 81.7 | 0.2 | 2.7 | 0.7 | 3.5 |
| 6055200707 | 13.46 | 21.18 | 20-25% | 3152 | Napa | 10.4 | 68.6 | 21 | 22.5 | 71.5 | 0.5 | 0.2 | 2.9 | 2.4 |
| 6059063007 | 13.46 | 21.16 | 20-25% | 6958 | Orange | 8.7 | 71.2 | 20.1 | 7.4 | 79.6 | 0.5 | 0.2 | 9.7 | 2.5 |
| 6073017035 | 13.46 | 21.15 | 20-25% | 2354 | San Diego | 12.4 | 73.7 | 13.9 | 15.3 | 47.8 | 4.2 | 0.1 | 24.9 | 7.6 |
| 6007001600 | 13.45 | 21.14 | 20-25% | 5266 | Butte | 10.3 | 76.2 | 13.5 | 6.6 | 86.8 | 0.5 | 0.9 | 2.1 | 3.1 |
| 6037500202 | 13.42 | 21.12 | 20-25% | 4935 | Los Angeles | 10.6 | 68.9 | 20.5 | 44.5 | 42.7 | 0.9 | 0.1 | 10.7 | 1.2 |
| 6059032054 | 13.41 | 21.11 | 20-25% | 5288 | Orange | 14.4 | 73.7 | 11.9 | 24.7 | 61 | 2 | 0.2 | 9.1 | 3.1 |
| 6037272100 | 13.41 | 21.10 | 20-25% | 4354 | Los Angeles | 12.1 | 75.9 | 12 | 24.4 | 60.8 | 1.7 | 0.2 | 8.8 | 4.1 |
| 6059021810 | 13.41 | 21.09 | 20-25% | 3627 | Orange | 11.8 | 73.9 | 14.3 | 19 | 68.3 | 1.7 | 0.3 | 8.1 | 2.6 |
| 6111001102 | 13.40 | 21.07 | 20-25% | 3539 | Ventura | 9.2 | 75.3 | 15.5 | 19.8 | 75 | 0.5 | 0.5 | 2 | 2.2 |
| 6067007417 | 13.39 | 21.06 | 20-25% | 3012 | Sacramento | 13.7 | 77.8 | 8.5 | 13 | 56.1 | 9.4 | 1 | 15.2 | 5.3 |
| 6037651222 | 13.39 | 21.05 | 20-25% | 6211 | Los Angeles | 11 | 79.4 | 9.6 | 12.9 | 42.5 | 2.5 | 0.2 | 37.3 | 4.5 |
| 6057000105 | 13.37 | 21.04 | 20-25% | 2792 | Nevada | 8.5 | 75 | 16.5 | 5.7 | 89.8 | 0.8 | 1 | 0.6 | 2.1 |
| 6073016610 | 13.37 | 21.02 | 20-25% | 4163 | San Diego | 14.4 | 78.1 | 7.5 | 15.1 | 75.6 | 1.2 | 0.4 | 3.7 | 4.1 |
| 6113010508 | 13.37 | 21.01 | 20-25% | 2453 | Yolo | 7.8 | 80 | 12.2 | 9.7 | 71.5 | 1.1 | 0.1 | 13 | 4.6 |
| 6067009622 | 13.36 | 21.00 | 20-25% | 7222 | Sacramento | 14.5 | 75 | 10.5 | 16.1 | 41.2 | 11.6 | 0.2 | 24.3 | 6.5 |
| 6073017404 | 13.36 | 20.99 | 20-25% | 6338 | San Diego | 11.4 | 74.1 | 14.5 | 16.5 | 76.8 | 0.5 | 0.4 | 3.4 | 2.4 |
| 6059052505 | 13.35 | 20.97 | 20-25% | 4916 | Orange | 9.8 | 72.1 | 18.1 | 13.3 | 45.4 | 2 | 0.1 | 35.7 | 3.5 |

| | | | | | | | | | | | | | | |
|---|---|---|---|---|---|---|---|---|---|---|---|---|---|---|
| 6037267902 | 13.35 | 20.96 | 20-25% | 3375 | Los Angeles | 11.3 | 72.9 | 15.8 | 5.7 | 77.1 | 2 | 0 | 10.8 | 4.4 |
| 6073022100 | 13.35 | 20.95 | 20-25% | 9082 | San Diego | 15 | 75.1 | 9.9 | 17.8 | 66.2 | 2.2 | 0.2 | 9.7 | 3.9 |
| 6085512034 | 13.35 | 20.94 | 20-25% | 3101 | Santa Clara | 14.6 | 77.8 | 7.6 | 28.6 | 45.2 | 4.1 | 0.4 | 18.1 | 3.5 |
| 6075026303 | 13.34 | 20.92 | 20-25% | 4551 | San Francisco | 10.1 | 74.3 | 15.6 | 27 | 11.6 | 1.6 | 0.1 | 57.8 | 2 |
| 6021010502 | 13.33 | 20.91 | 20-25% | 1564 | Glenn | 14.7 | 70.2 | 15.1 | 22.1 | 75.1 | 0.3 | 1 | 0.6 | 1 |
| 6059052426 | 13.33 | 20.90 | 20-25% | 7957 | Orange | 14.5 | 82 | 3.5 | 11.6 | 56 | 1.5 | 0.2 | 26.3 | 4.4 |
| 6061021502 | 13.32 | 20.89 | 20-25% | 3554 | Placer | 9.8 | 72.5 | 17.7 | 7.9 | 86.4 | 0.8 | 0.9 | 1.6 | 2.4 |
| 6065043218 | 13.31 | 20.87 | 20-25% | 5597 | Riverside | 10.5 | 80.7 | 8.8 | 23.9 | 66.4 | 2.4 | 0.5 | 4.4 | 2.5 |
| 6001451704 | 13.30 | 20.86 | 20-25% | 4449 | Alameda | 13.2 | 73.9 | 12.9 | 17.4 | 70.6 | 1.6 | 0.3 | 6.5 | 3.6 |
| 6013334004 | 13.28 | 20.85 | 20-25% | 7367 | Contra Costa | 11.3 | 73.6 | 15.1 | 21.2 | 53.8 | 4.1 | 0.3 | 15.4 | 5.2 |
| 6079012000 | 13.28 | 20.83 | 20-25% | 7232 | San Luis Obispo | 12.9 | 75.2 | 11.9 | 29.5 | 61.8 | 0.9 | 0.5 | 4.5 | 2.8 |
| 6097150610 | 13.27 | 20.82 | 20-25% | 4004 | Sonoma | 13.5 | 78.4 | 8.1 | 17.2 | 71.8 | 1.9 | 0.5 | 5.7 | 2.9 |
| 6095250104 | 13.27 | 20.81 | 20-25% | 2280 | Solano | 9.8 | 69.1 | 21.1 | 13.1 | 30.7 | 14.3 | 0.3 | 37.8 | 3.7 |
| 6073017604 | 13.27 | 20.80 | 20-25% | 7040 | San Diego | 11.9 | 70.3 | 17.8 | 16.3 | 73.4 | 0.9 | 0.2 | 6.8 | 2.4 |
| 6037400402 | 13.26 | 20.78 | 20-25% | 4125 | Los Angeles | 9.6 | 76.7 | 13.7 | 23.4 | 63.9 | 1 | 0.1 | 8.9 | 2.7 |
| 6061021603 | 13.25 | 20.77 | 20-25% | 4549 | Placer | 13.6 | 62.4 | 24 | 25.6 | 67.9 | 0.8 | 0.9 | 2.6 | 2.3 |
| 6075016400 | 13.25 | 20.76 | 20-25% | 3778 | San Francisco | 4.7 | 85.7 | 9.6 | 12.7 | 62.7 | 9.4 | 0.3 | 9.8 | 5.2 |
| 6017030200 | 13.24 | 20.75 | 20-25% | 4773 | El Dorado | 13.2 | 77.6 | 9.2 | 44.2 | 48.4 | 0.6 | 0.5 | 4.6 | 1.6 |
| 6073013604 | 13.22 | 20.73 | 20-25% | 6147 | San Diego | 12.2 | 78.8 | 9 | 15.6 | 70.2 | 5.4 | 0.2 | 4.3 | 4.2 |
| 6059075604 | 13.20 | 20.72 | 20-25% | 7487 | Orange | 9.2 | 71.9 | 18.9 | 10.1 | 74 | 0.6 | 0.1 | 12.4 | 2.8 |
| 6111005700 | 13.20 | 20.71 | 20-25% | 2068 | Ventura | 11.3 | 87.3 | 1.4 | 25 | 58.7 | 3.4 | 0.4 | 6.9 | 5.6 |
| 6065047202 | 13.20 | 20.70 | 20-25% | 1929 | Riverside | 7.3 | 58.7 | 34 | 27.5 | 68.6 | 1.1 | 0.4 | 0.7 | 1.6 |
| 6113011103 | 13.19 | 20.68 | 20-25% | 3118 | Yolo | 16.3 | 76.8 | 6.9 | 50.4 | 38.6 | 1.4 | 0.5 | 7.2 | 1.8 |
| 6085512503 | 13.19 | 20.67 | 20-25% | 7726 | Santa Clara | 15.9 | 76.4 | 7.7 | 32.2 | 50.4 | 2.5 | 0.3 | 11.6 | 3 |
| 6073020106 | 13.19 | 20.66 | 20-25% | 3803 | San Diego | 13.5 | 75.9 | 10.6 | 43.4 | 44.9 | 1.1 | 0.6 | 7.6 | 2.3 |
| 6089010806 | 13.18 | 20.65 | 20-25% | 3192 | Shasta | 12.5 | 69.9 | 17.6 | 7.3 | 83.1 | 1.1 | 2.4 | 1.8 | 4.4 |
| 6067008008 | 13.17 | 20.63 | 20-25% | 4610 | Sacramento | 8.7 | 69.7 | 21.6 | 8.7 | 82.3 | 1.6 | 0.8 | 3 | 3.6 |
| 6073020705 | 13.17 | 20.62 | 20-25% | 4635 | San Diego | 12.4 | 74.4 | 13.2 | 33.2 | 58.2 | 1.2 | 0.3 | 5.1 | 2 |
| 6073009305 | 13.17 | 20.61 | 20-25% | 4488 | San Diego | 8.9 | 81.3 | 9.8 | 17 | 59.4 | 5 | 0.4 | 13.6 | 4.6 |
| 6067005701 | 13.17 | 20.60 | 20-25% | 3060 | Sacramento | 11.1 | 69.9 | 19 | 10.6 | 76.7 | 2.2 | 0.9 | 6 | 3.7 |
| 6037920114 | 13.17 | 20.58 | 20-25% | 6490 | Los Angeles | 17 | 79.2 | 3.8 | 16.8 | 55.5 | 3.9 | 0.3 | 19.6 | 4 |
| 6013359202 | 13.16 | 20.57 | 20-25% | 6148 | Contra Costa | 9.1 | 72.6 | 18.3 | 21.5 | 46.7 | 7.3 | 0.3 | 18.9 | 5.3 |
| 6085507701 | 13.16 | 20.56 | 20-25% | 4039 | Santa Clara | 11.2 | 76.1 | 12.7 | 2.8 | 32.5 | 0.3 | 0.1 | 61.8 | 2.6 |
| 6065042733 | 13.15 | 20.54 | 20-25% | 4234 | Riverside | 17.9 | 74.4 | 7.7 | 32.4 | 53.2 | 4.3 | 0.3 | 7.4 | 2.4 |
| 6071000814 | 13.15 | 20.53 | 20-25% | 3832 | San Bernardino | 9.2 | 73.3 | 17.5 | 20.7 | 65.9 | 2.9 | 0.2 | 7.8 | 2.5 |
| 6081604800 | 13.15 | 20.52 | 20-25% | 5059 | San Mateo | 10.8 | 73.2 | 16 | 13.1 | 37.8 | 0.8 | 0.1 | 44.5 | 3.8 |
| 6083002808 | 13.15 | 20.51 | 20-25% | 6506 | Santa Barbara | 10.8 | 68.7 | 20.5 | 18.8 | 67.4 | 4 | 0.6 | 5.5 | 3.8 |
| 6085506605 | 13.15 | 20.49 | 20-25% | 3941 | Santa Clara | 12.5 | 77.3 | 10.2 | 23.9 | 46.3 | 3.2 | 0.2 | 23 | 3.3 |
| 6089012500 | 13.14 | 20.48 | 20-25% | 1477 | Shasta | 5.1 | 68.2 | 26.7 | 3.2 | 90.7 | 0.3 | 2.2 | 0.4 | 3.2 |
| 6065044932 | 13.14 | 20.47 | 20-25% | 3067 | Riverside | 13.3 | 73.9 | 12.8 | 42.2 | 44.4 | 1.2 | 0.6 | 9 | 2.7 |
| 6073008341 | 13.14 | 20.46 | 20-25% | 7614 | San Diego | 4 | 83.9 | 12.1 | 7 | 44.7 | 1.5 | 0 | 43.1 | 3.7 |
| 6073008339 | 13.14 | 20.44 | 20-25% | 1853 | San Diego | 5.2 | 91.2 | 3.6 | 12.2 | 45.3 | 1.3 | 0.1 | 37.1 | 4 |
| 6073008502 | 13.13 | 20.43 | 20-25% | 6241 | San Diego | 10.9 | 74.4 | 14.7 | 23.3 | 62.5 | 1.4 | 0.3 | 8.9 | 3.6 |
| 6073008344 | 13.13 | 20.42 | 20-25% | 3462 | San Diego | 11.3 | 70.9 | 17.8 | 9.1 | 72.4 | 1.6 | 0.1 | 13.4 | 3.4 |
| 6001407700 | 13.11 | 20.41 | 20-25% | 4109 | Alameda | 10.2 | 75.9 | 13.9 | 13.6 | 22.5 | 51 | 0.2 | 8.1 | 4.6 |
| 6037577100 | 13.11 | 20.39 | 20-25% | 6700 | Los Angeles | 9.3 | 81.5 | 9.2 | 21.2 | 60.4 | 6.4 | 0.4 | 7.1 | 4.5 |
| 6059032013 | 13.11 | 20.38 | 20-25% | 4984 | Orange | 10.1 | 67.3 | 22.6 | 16.1 | 71.5 | 2 | 0.1 | 5.9 | 4.5 |
| 6081602800 | 13.10 | 20.37 | 20-25% | 4522 | San Mateo | 10.6 | 76.2 | 13.2 | 18.3 | 28.8 | 5.3 | 0.2 | 43.2 | 4.3 |
| 6037296401 | 13.09 | 20.36 | 20-25% | 3191 | Los Angeles | 10.5 | 67.5 | 22 | 24.3 | 59.1 | 3.8 | 0.3 | 8.2 | 4.2 |
| 6085506603 | 13.09 | 20.34 | 20-25% | 4070 | Santa Clara | 13.5 | 73 | 13.5 | 11.9 | 59.6 | 0.5 | 0.2 | 23.7 | 4.1 |
| 6055200705 | 13.08 | 20.33 | 20-25% | 2776 | Napa | 14.5 | 72.9 | 12.6 | 39.7 | 55.6 | 0.4 | 0.5 | 1.8 | 2 |
| 6065044518 | 13.08 | 20.32 | 20-25% | 5232 | Riverside | 13.7 | 71.8 | 14.5 | 36 | 52 | 6 | 0.6 | 2.8 | 2.8 |
| 6001451701 | 13.08 | 20.31 | 20-25% | 3102 | Alameda | 12.5 | 73.5 | 14 | 19.5 | 67.8 | 1.3 | 0.4 | 6.5 | 4.4 |
| 6059099504 | 13.07 | 20.29 | 20-25% | 2746 | Orange | 12.1 | 68.5 | 19.4 | 9.4 | 81.6 | 0.1 | 0.3 | 5.7 | 2.9 |
| 6049000200 | 13.07 | 20.28 | 20-25% | 1910 | Modoc | 12.3 | 69.8 | 17.9 | 22.1 | 73.1 | 0.2 | 2 | 0.5 | 2.2 |
| 6055200504 | 13.07 | 20.27 | 20-25% | 6431 | Napa | 14.1 | 72 | 13.9 | 47.9 | 47.1 | 0.6 | 0.4 | 2.6 | 1.4 |
| 6087121401 | 13.06 | 20.25 | 20-25% | 2683 | Santa Cruz | 11 | 73 | 16 | 25.6 | 64 | 0.9 | 0.4 | 5.3 | 3.8 |
| 6081608400 | 13.06 | 20.24 | 20-25% | 5546 | San Mateo | 12.7 | 77 | 10.3 | 32.8 | 31.5 | 3.3 | 0.1 | 28.6 | 3.7 |
| 6001422300 | 13.04 | 20.23 | 20-25% | 3387 | Alameda | 8.9 | 78 | 13.1 | 9.2 | 60.9 | 5.5 | 0.1 | 18.9 | 5.5 |
| 6073019101 | 13.04 | 20.22 | 20-25% | 7458 | San Diego | 15.9 | 74.8 | 9.3 | 36.2 | 41.6 | 1.3 | 14.5 | 3.8 | 2.7 |
| 6111008402 | 13.04 | 20.20 | 20-25% | 5110 | Ventura | 12.2 | 75.9 | 11.9 | 15 | 74.8 | 0.9 | 0.3 | 6 | 3 |
| 6081602700 | 13.04 | 20.19 | 20-25% | 5795 | San Mateo | 13.6 | 78.3 | 8.1 | 19.6 | 27.2 | 4.8 | 0.2 | 43 | 5.2 |
| 6071011102 | 13.03 | 20.18 | 20-25% | 2031 | San Bernardino | 11.1 | 78.3 | 10.6 | 12.9 | 80.6 | 0.2 | 1.1 | 1.4 | 3.7 |
| 6037920044 | 13.03 | 20.17 | 20-25% | 2686 | Los Angeles | 12.1 | 81 | 6.9 | 24.2 | 60.9 | 2.3 | 0.1 | 9 | 3.4 |
| 6071009108 | 13.03 | 20.15 | 20-25% | 6825 | San Bernardino | 13.2 | 77.3 | 9.5 | 33.3 | 59.1 | 2.2 | 0.5 | 2.2 | 2.8 |
| 6085502901 | 13.03 | 20.14 | 20-25% | 5919 | Santa Clara | 14.4 | 72.1 | 13.5 | 20 | 58.4 | 2.1 | 0.2 | 15 | 4.2 |

| | | | | | | | | | | | | | | | |
|---|---|---|---|---|---|---|---|---|---|---|---|---|---|---|---|
| 6023010200 | 13.03 | 20.13 | 20-25% | 2983 | Humboldt | 9.4 | 72.5 | 18.1 | 4.9 | 83.8 | 0.4 | 6 | 1.1 | 3.8 |
| 6007001400 | 13.03 | 20.12 | 20-25% | 5797 | Butte | 10.6 | 75.7 | 13.7 | 12.7 | 81.9 | 0.6 | 0.7 | 2.3 | 1.8 |
| 6075040200 | 13.03 | 20.10 | 20-25% | 5191 | San Francisco | 9.5 | 75.7 | 14.8 | 7.5 | 48.9 | 0.8 | 0 | 38.3 | 4.5 |
| 6037134424 | 13.02 | 20.09 | 20-25% | 2887 | Los Angeles | 8.9 | 79.4 | 11.7 | 6.7 | 71.5 | 1.7 | 0 | 16.5 | 3.6 |
| 6037403305 | 13.02 | 20.08 | 20-25% | 2100 | Los Angeles | 9.5 | 81.7 | 8.8 | 13.9 | 15.1 | 1.5 | 0 | 68 | 1.4 |
| 6059021905 | 13.01 | 20.07 | 20-25% | 5485 | Orange | 11 | 75.6 | 13.4 | 19.8 | 58.8 | 2.2 | 0.1 | 15.2 | 3.9 |
| 6071008708 | 13.01 | 20.05 | 20-25% | 4352 | San Bernardino | 13 | 75.5 | 11.5 | 24.6 | 71.3 | 0.9 | 0.7 | 0.9 | 1.6 |
| 6059042327 | 13.00 | 20.04 | 20-25% | 4814 | Orange | 10.2 | 78.1 | 11.7 | 12 | 71 | 1.4 | 0.2 | 10.6 | 4.7 |
| 6073021303 | 13.00 | 20.03 | 20-25% | 8981 | San Diego | 13 | 76 | 11 | 28.9 | 54.2 | 2.3 | 0.3 | 11.3 | 2.9 |
| 6059063806 | 13.00 | 20.02 | 20-25% | 3790 | Orange | 12.8 | 69.5 | 17.7 | 19.4 | 71.4 | 0.5 | 0.2 | 5.6 | 2.9 |
| 6085512305 | 12.99 | 20.00 | 20-25% | 3936 | Santa Clara | 12.4 | 76.6 | 11 | 23.8 | 57.4 | 1.4 | 0.4 | 13.7 | 3.3 |
| 6095252108 | 12.98 | 19.99 | 15-20% | 3165 | Solano | 11.4 | 76.9 | 11.7 | 14.1 | 65.7 | 6.4 | 0.3 | 8.8 | 4.6 |
| 6001450102 | 12.98 | 19.98 | 15-20% | 9434 | Alameda | 8.8 | 86.4 | 4.8 | 21.5 | 25.9 | 28.6 | 0.9 | 20.5 | 2.6 |
| 6093001100 | 12.97 | 19.96 | 15-20% | 2175 | Siskiyou | 10.8 | 71.3 | 17.9 | 10.6 | 80.9 | 2.1 | 1 | 0.8 | 4.6 |
| 6085512023 | 12.97 | 19.95 | 15-20% | 5418 | Santa Clara | 17 | 77.7 | 5.3 | 47 | 24.6 | 6 | 0.5 | 18.6 | 3.2 |
| 6073009102 | 12.97 | 19.94 | 15-20% | 3537 | San Diego | 8.4 | 80.4 | 11.2 | 24.3 | 58.9 | 3.3 | 0.3 | 8.8 | 4.3 |
| 6079010901 | 12.95 | 19.93 | 15-20% | 8319 | San Luis Obispo | 0.3 | 99.5 | 0.2 | 11.7 | 70.8 | 0.9 | 0.2 | 11.4 | 5 |
| 6037276604 | 12.95 | 19.91 | 15-20% | 3983 | Los Angeles | 6.2 | 82.7 | 11.1 | 14.8 | 56.5 | 9.4 | 0.1 | 14.1 | 5.1 |
| 6111000903 | 12.95 | 19.90 | 15-20% | 5865 | Ventura | 10.4 | 74.1 | 15.5 | 19.8 | 75.3 | 0.5 | 0.3 | 2 | 2 |
| 6111003010 | 12.94 | 19.89 | 15-20% | 2885 | Ventura | 17.7 | 75.2 | 7.1 | 65.9 | 20.6 | 4.4 | 0.1 | 7 | 2 |
| 6073021400 | 12.94 | 19.88 | 15-20% | 7225 | San Diego | 15.2 | 75.4 | 9.4 | 16.9 | 68 | 4.9 | 0.4 | 5.5 | 4.2 |
| 6097151301 | 12.94 | 19.86 | 15-20% | 4587 | Sonoma | 12.2 | 80.9 | 6.9 | 32 | 57.7 | 2.6 | 0.7 | 3.4 | 3.6 |
| 6083001601 | 12.93 | 19.85 | 15-20% | 5270 | Santa Barbara | 11.5 | 74.4 | 14.1 | 45.9 | 48.1 | 0.6 | 0.3 | 3.3 | 1.7 |
| 6001441521 | 12.93 | 19.84 | 15-20% | 5869 | Alameda | 16.4 | 72 | 11.6 | 6 | 17.9 | 3.2 | 0.1 | 66.4 | 6.4 |
| 6041101200 | 12.93 | 19.83 | 15-20% | 2682 | Marin | 10.7 | 73.6 | 15.7 | 18.2 | 72 | 0.7 | 0.3 | 6 | 2.7 |
| 6061021801 | 12.90 | 19.81 | 15-20% | 4522 | Placer | 8.7 | 70.6 | 20.7 | 6.7 | 89.8 | 0.5 | 0.6 | 0.8 | 1.5 |
| 6109002200 | 12.90 | 19.80 | 15-20% | 8132 | Tuolumne | 9.5 | 68.8 | 21.7 | 8.2 | 87 | 0.3 | 1 | 1.2 | 2.4 |
| 6059042106 | 12.90 | 19.79 | 15-20% | 1377 | Orange | 7 | 63.6 | 29.4 | 5.4 | 89.2 | 0.3 | 0.8 | 1.8 | 2.5 |
| 6067008508 | 12.89 | 19.78 | 15-20% | 6825 | Sacramento | 18.1 | 75.6 | 6.3 | 8.8 | 62.5 | 1.4 | 0.2 | 23.7 | 3.4 |
| 6001407900 | 12.89 | 19.76 | 15-20% | 2706 | Alameda | 11.7 | 75.8 | 12.5 | 13.1 | 39.2 | 22.7 | 0.3 | 17.8 | 6.9 |
| 6013337100 | 12.87 | 19.75 | 15-20% | 3200 | Contra Costa | 10.3 | 74.4 | 15.3 | 17.5 | 61.9 | 2 | 0.2 | 14.2 | 4.2 |
| 6079012503 | 12.87 | 19.74 | 15-20% | 5240 | San Luis Obispo | 14.4 | 72.8 | 12.8 | 20.8 | 70.2 | 1.6 | 0.5 | 4.2 | 2.7 |
| 6079011501 | 12.86 | 19.73 | 15-20% | 1783 | San Luis Obispo | 8.5 | 76 | 15.5 | 17.2 | 73.4 | 1.5 | 1.1 | 4.3 | 2.6 |
| 6039000109 | 12.85 | 19.71 | 15-20% | 2392 | Madera | 8.5 | 70.5 | 21 | 11 | 80.4 | 1.4 | 1.8 | 1 | 4.5 |
| 6001443102 | 12.84 | 19.70 | 15-20% | 4611 | Alameda | 14.2 | 75.2 | 10.6 | 4.2 | 21.2 | 0.5 | 0.2 | 70.9 | 3 |
| 6055200400 | 12.84 | 19.69 | 15-20% | 3618 | Napa | 11.1 | 71.6 | 17.3 | 18.2 | 76.5 | 0.5 | 0.5 | 2.1 | 2.3 |
| 6013320003 | 12.83 | 19.67 | 15-20% | 2805 | Contra Costa | 13 | 80.5 | 6.5 | 11.7 | 65.7 | 2.2 | 0.7 | 13.3 | 6.4 |
| 6081604500 | 12.83 | 19.66 | 15-20% | 3402 | San Mateo | 10.6 | 65.4 | 24 | 10.6 | 50.4 | 0.6 | 0 | 35.5 | 2.9 |
| 6037577200 | 12.83 | 19.65 | 15-20% | 5414 | Los Angeles | 5.8 | 83.5 | 10.7 | 17.5 | 68.6 | 3.9 | 0.4 | 6.4 | 3.3 |
| 6105000102 | 12.82 | 19.64 | 15-20% | 4558 | Trinity | 10.2 | 69.9 | 19.9 | 7.5 | 84.2 | 0.6 | 2.9 | 1.2 | 3.6 |
| 6097152203 | 12.82 | 19.62 | 15-20% | 3527 | Sonoma | 9 | 74 | 17 | 11.8 | 80.3 | 1.8 | 0.5 | 2.5 | 3.1 |
| 6087120200 | 12.81 | 19.61 | 15-20% | 4283 | Santa Cruz | 8.6 | 79.3 | 12.1 | 14 | 79.9 | 0.7 | 0.5 | 1.9 | 3.1 |
| 6059063400 | 12.80 | 19.60 | 15-20% | 4795 | Orange | 10.4 | 73.2 | 16.4 | 5.6 | 88.8 | 0.5 | 0.1 | 3 | 2 |
| 6067008206 | 12.79 | 19.59 | 15-20% | 5638 | Sacramento | 12.2 | 78 | 9.8 | 12.2 | 79.3 | 1.2 | 0.8 | 3.6 | 2.9 |
| 6085503330 | 12.78 | 19.57 | 15-20% | 7618 | Santa Clara | 19.7 | 73.7 | 6.6 | 7.5 | 10.1 | 1.7 | 0.1 | 77.2 | 3.3 |
| 6037480600 | 12.77 | 19.56 | 15-20% | 7863 | Los Angeles | 12.3 | 77 | 10.7 | 18.9 | 46.9 | 4.2 | 0.1 | 26.5 | 3.4 |
| 6001406800 | 12.77 | 19.55 | 15-20% | 3428 | Alameda | 13.1 | 74.4 | 12.5 | 11.1 | 39.6 | 15.1 | 0.3 | 29.4 | 4.5 |
| 6073008355 | 12.76 | 19.54 | 15-20% | 3365 | San Diego | 13.7 | 76.4 | 9.9 | 10.1 | 26.5 | 4.6 | 0.2 | 53.2 | 5.4 |
| 6101050504 | 12.76 | 19.52 | 15-20% | 7163 | Sutter | 13.4 | 74.4 | 12.2 | 19.7 | 42.8 | 1.4 | 0.9 | 31.5 | 3.7 |
| 6065044911 | 12.74 | 19.51 | 15-20% | 4617 | Riverside | 9.5 | 70.1 | 20.4 | 24.6 | 67.3 | 2.4 | 0.4 | 3.3 | 2.1 |
| 6085506102 | 12.74 | 19.50 | 15-20% | 3808 | Santa Clara | 11.7 | 72.1 | 16.2 | 11.7 | 47.6 | 2 | 0.1 | 34.7 | 4 |
| 6013360200 | 12.74 | 19.49 | 15-20% | 4626 | Contra Costa | 11.7 | 73.3 | 15 | 21.4 | 39.2 | 16.3 | 0.4 | 17.2 | 5.5 |
| 6037192002 | 12.73 | 19.47 | 15-20% | 2735 | Los Angeles | 8.1 | 80.3 | 11.6 | 7.9 | 80 | 2.4 | 0.2 | 5.8 | 3.7 |
| 6037430003 | 12.73 | 19.46 | 15-20% | 4604 | Los Angeles | 10.6 | 74.2 | 15.2 | 27.5 | 43 | 5.7 | 0.2 | 19.3 | 4.3 |
| 6085507905 | 12.73 | 19.45 | 15-20% | 5784 | Santa Clara | 11.2 | 79.1 | 9.7 | 4.4 | 20.5 | 0.6 | 0.1 | 71.9 | 2.5 |
| 6037574000 | 12.72 | 19.43 | 15-20% | 5277 | Los Angeles | 11.7 | 72.2 | 16.1 | 18.6 | 67.4 | 2.4 | 0.2 | 7.5 | 3.8 |
| 6087100700 | 12.71 | 19.42 | 15-20% | 2632 | Santa Cruz | 4 | 88.6 | 7.4 | 16.9 | 68.5 | 3.2 | 1.6 | 5.2 | 4.7 |
| 6103000200 | 12.70 | 19.41 | 15-20% | 7705 | Tehama | 12.9 | 70.5 | 16.6 | 7.8 | 86.1 | 0.2 | 2.3 | 0.8 | 2.8 |
| 6085505402 | 12.70 | 19.40 | 15-20% | 3026 | Santa Clara | 13.8 | 73.5 | 12.7 | 24.8 | 37.4 | 1.6 | 0 | 32.3 | 3.8 |
| 6059052420 | 12.70 | 19.38 | 15-20% | 21098 | Orange | 16.9 | 78.3 | 4.8 | 8 | 36.6 | 1.3 | 0 | 49.6 | 4.4 |
| 6073017030 | 12.69 | 19.37 | 15-20% | 17064 | San Diego | 18.1 | 72.9 | 9 | 8.8 | 54.5 | 2.3 | 0.2 | 29.3 | 5 |
| 6085511100 | 12.69 | 19.36 | 15-20% | 5445 | Santa Clara | 13.8 | 67.6 | 18.6 | 2.9 | 63.7 | 0.7 | 0.1 | 28.4 | 4.2 |
| 6073008349 | 12.68 | 19.35 | 15-20% | 3514 | San Diego | 11.1 | 77.5 | 11.4 | 16 | 29.8 | 4.4 | 0.2 | 44.7 | 4.9 |
| 6071002014 | 12.68 | 19.33 | 15-20% | 4846 | San Bernardino | 9.4 | 79.5 | 11.1 | 25.8 | 62.5 | 3.7 | 0.2 | 5.5 | 2.3 |
| 6029002811 | 12.68 | 19.32 | 15-20% | 3854 | Kern | 9.1 | 70.4 | 20.5 | 11.1 | 66 | 3.2 | 0.5 | 16.3 | 3 |
| 6073013418 | 12.68 | 19.31 | 15-20% | 5998 | San Diego | 13.3 | 75.9 | 10.8 | 54.7 | 24.8 | 3.6 | 0.1 | 14.3 | 2.6 |

| | | | | | | | | | | | | | | |
|---|---|---|---|---|---|---|---|---|---|---|---|---|---|---|
| 6081605400 | 12.67 | 19.30 | 15-20% | 6147 | San Mateo | 13.5 | 77 | 9.5 | 21.3 | 58.2 | 1.5 | 0.1 | 15.1 | 3.9 |
| 6001403702 | 12.67 | 19.28 | 15-20% | 1724 | Alameda | 5.2 | 82.3 | 12.5 | 8.6 | 56.7 | 18.1 | 0.2 | 10 | 6.4 |
| 6037408722 | 12.66 | 19.27 | 15-20% | 4400 | Los Angeles | 9.4 | 78.1 | 12.5 | 26.8 | 14 | 1 | 0.2 | 56.6 | 1.5 |
| 6073018612 | 12.65 | 19.26 | 15-20% | 3331 | San Diego | 13.1 | 77.2 | 9.7 | 36.3 | 46.2 | 6.1 | 0.5 | 7.1 | 3.8 |
| 6085508204 | 12.62 | 19.25 | 15-20% | 4194 | Santa Clara | 19.8 | 68.5 | 11.7 | 8.8 | 33.7 | 1.2 | 0.1 | 53 | 3.1 |
| 6001430700 | 12.62 | 19.23 | 15-20% | 3814 | Alameda | 12.6 | 74.3 | 13.1 | 16.8 | 56.9 | 2.6 | 0.4 | 17.8 | 5.4 |
| 6089011600 | 12.62 | 19.22 | 15-20% | 3877 | Shasta | 10.7 | 73 | 16.3 | 8.4 | 79.2 | 0.5 | 3.8 | 4.4 | 3.7 |
| 6075042601 | 12.61 | 19.21 | 15-20% | 3687 | San Francisco | 9.1 | 76.1 | 14.8 | 7.6 | 46.9 | 1.2 | 0.2 | 39.5 | 4.6 |
| 6037480012 | 12.61 | 19.20 | 15-20% | 4763 | Los Angeles | 11.3 | 76.6 | 12.1 | 17.7 | 22.5 | 1.2 | 0.1 | 56.1 | 2.4 |
| 6037901205 | 12.61 | 19.18 | 15-20% | 10466 | Los Angeles | 13.4 | 75.2 | 11.4 | 23.8 | 54.8 | 11.1 | 0.4 | 6.8 | 3 |
| 6067008504 | 12.60 | 19.17 | 15-20% | 4320 | Sacramento | 13.9 | 79.6 | 6.5 | 8.7 | 70.2 | 2 | 0.5 | 15.7 | 2.8 |
| 6059021924 | 12.59 | 19.16 | 15-20% | 4192 | Orange | 14 | 79.9 | 6.1 | 14.8 | 52.1 | 1.9 | 0.1 | 27 | 4 |
| 6061023800 | 12.56 | 19.14 | 15-20% | 3257 | Placer | 0.6 | 32.7 | 66.7 | 5.1 | 89.4 | 1.1 | 0.2 | 3.4 | 0.8 |
| 6113010509 | 12.56 | 19.13 | 15-20% | 3471 | Yolo | 7.3 | 80.1 | 12.6 | 12.8 | 59.5 | 2 | 0.2 | 21.8 | 3.7 |
| 6079012900 | 12.56 | 19.12 | 15-20% | 5296 | San Luis Obispo | 12.6 | 74.9 | 12.5 | 17 | 77.3 | 0.5 | 0.9 | 1.8 | 2.5 |
| 6075042700 | 12.56 | 19.11 | 15-20% | 5326 | San Francisco | 8.2 | 74.6 | 17.2 | 6.5 | 43.9 | 1.4 | 0.2 | 44.4 | 3.6 |
| 6059110203 | 12.55 | 19.09 | 15-20% | 5393 | Orange | 11.2 | 78 | 10.8 | 25.1 | 48.9 | 1.8 | 0.3 | 20.2 | 3.7 |
| 6059099240 | 12.55 | 19.08 | 15-20% | 5183 | Orange | 9.9 | 76.7 | 13.4 | 10.7 | 75.5 | 0.8 | 0.2 | 8.5 | 4.1 |
| 6059099246 | 12.55 | 19.07 | 15-20% | 3614 | Orange | 9.6 | 73.7 | 16.7 | 10 | 67 | 0.7 | 0.3 | 18.8 | 3.2 |
| 6061020107 | 12.54 | 19.06 | 15-20% | 3510 | Placer | 15.6 | 79.1 | 5.3 | 59.6 | 39 | 0.1 | 0.4 | 0.3 | 0.6 |
| 6005000101 | 12.54 | 19.04 | 15-20% | 3907 | Amador | 7 | 62.4 | 30.6 | 4.9 | 90.2 | 0.3 | 1.5 | 0.8 | 2.3 |
| 6023010902 | 12.52 | 19.03 | 15-20% | 4143 | Humboldt | 11.1 | 75.1 | 13.8 | 7.6 | 83.5 | 0.1 | 4.7 | 0.6 | 3.4 |
| 6059032011 | 12.52 | 19.02 | 15-20% | 1606 | Orange | 5.8 | 85.2 | 9 | 7.4 | 86.9 | 0.2 | 0.6 | 1.8 | 3.1 |
| 6075033100 | 12.52 | 19.01 | 15-20% | 3968 | San Francisco | 10.4 | 70 | 19.6 | 5.5 | 37.3 | 0.5 | 0.1 | 53.8 | 2.8 |
| 6073006801 | 12.51 | 18.99 | 15-20% | 2503 | San Diego | 6.6 | 81.3 | 12.1 | 12.6 | 72 | 6.7 | 0.7 | 4.2 | 3.8 |
| 6097153806 | 12.51 | 18.98 | 15-20% | 3288 | Sonoma | 12.5 | 72 | 15.5 | 26.8 | 65.6 | 1 | 0.9 | 3.2 | 2.5 |
| 6085507903 | 12.50 | 18.97 | 15-20% | 4828 | Santa Clara | 10.4 | 74.8 | 14.8 | 2.1 | 23.5 | 0.4 | 0 | 71.7 | 2.3 |
| 6071010420 | 12.50 | 18.96 | 15-20% | 4103 | San Bernardino | 13.3 | 71.8 | 14.9 | 17 | 74.1 | 2.7 | 1 | 1.4 | 3.9 |
| 6073015302 | 12.50 | 18.94 | 15-20% | 4075 | San Diego | 9.2 | 66.3 | 24.5 | 16.3 | 72.9 | 2.6 | 0.3 | 4.2 | 3.7 |
| 6057000402 | 12.49 | 18.93 | 15-20% | 6926 | Nevada | 8.9 | 73.2 | 17.9 | 7.3 | 86.3 | 0.3 | 1.3 | 1.4 | 3.3 |
| 6013343001 | 12.49 | 18.92 | 15-20% | 4806 | Contra Costa | 10.2 | 75.4 | 14.4 | 14.6 | 73.1 | 1.1 | 0.1 | 7.4 | 3.8 |
| 6037910804 | 12.49 | 18.91 | 15-20% | 3295 | Los Angeles | 10.2 | 80.7 | 9.1 | 20.2 | 74.1 | 0.5 | 0.5 | 2.6 | 2 |
| 6013345111 | 12.48 | 18.89 | 15-20% | 5099 | Contra Costa | 13.6 | 79.1 | 7.3 | 9.4 | 48.1 | 2.6 | 0.4 | 36.6 | 3 |
| 6073018513 | 12.47 | 18.88 | 15-20% | 9081 | San Diego | 14.8 | 76.4 | 8.8 | 23.5 | 54.4 | 5.9 | 0.2 | 10.8 | 5.1 |
| 6001450200 | 12.47 | 18.87 | 15-20% | 4067 | Alameda | 11.3 | 84 | 4.7 | 15 | 55.4 | 4.6 | 0 | 20 | 4.8 |
| 6001441522 | 12.47 | 18.85 | 15-20% | 4980 | Alameda | 13.3 | 75.3 | 11.4 | 13.9 | 17.8 | 5 | 0.1 | 58.1 | 5.1 |
| 6007001900 | 12.44 | 18.84 | 15-20% | 3373 | Butte | 8.2 | 63.2 | 28.6 | 6 | 89.6 | 0.3 | 1 | 1.2 | 2 |
| 6059063302 | 12.44 | 18.83 | 15-20% | 4165 | Orange | 13.3 | 76.5 | 10.2 | 10.8 | 83.2 | 0.6 | 0.1 | 2.5 | 2.8 |
| 6037800410 | 12.43 | 18.82 | 15-20% | 3627 | Los Angeles | 4.2 | 90.2 | 5.6 | 9.3 | 73.2 | 4.3 | 0.2 | 8.9 | 4.1 |
| 6111006700 | 12.43 | 18.80 | 15-20% | 3117 | Ventura | 10.4 | 69.9 | 19.7 | 11 | 77.5 | 1.2 | 0.1 | 7 | 3.2 |
| 6037621301 | 12.43 | 18.79 | 15-20% | 6769 | Los Angeles | 10.9 | 77.3 | 11.8 | 12.8 | 67.7 | 2.3 | 0.1 | 12.5 | 4.7 |
| 6061022500 | 12.43 | 18.78 | 15-20% | 3879 | Placer | 14.9 | 75.9 | 9.2 | 10.3 | 65 | 4.7 | 0.6 | 15.3 | 4.2 |
| 6059021914 | 12.43 | 18.77 | 15-20% | 4218 | Orange | 11.7 | 76.1 | 12.2 | 38.8 | 50 | 0.8 | 0.3 | 8.3 | 1.8 |
| 6037464000 | 12.43 | 18.75 | 15-20% | 5621 | Los Angeles | 9.8 | 74.3 | 15.9 | 14.5 | 59.3 | 3 | 0.2 | 19.9 | 3.1 |
| 6059099239 | 12.41 | 18.74 | 15-20% | 3924 | Orange | 11 | 72.2 | 16.8 | 8.7 | 73.6 | 0.4 | 0.3 | 14.1 | 3 |
| 6077004104 | 12.40 | 18.73 | 15-20% | 3265 | San Joaquin | 11.3 | 73.7 | 15 | 13 | 77.5 | 0.2 | 0.4 | 6.2 | 2.8 |
| 6001443105 | 12.40 | 18.72 | 15-20% | 4456 | Alameda | 11.7 | 78.6 | 9.7 | 2.8 | 17 | 0.4 | 0 | 76.8 | 3.1 |
| 6037300701 | 12.40 | 18.70 | 15-20% | 6144 | Los Angeles | 10.1 | 72.4 | 17.5 | 9.4 | 76.7 | 0.5 | 0 | 10.2 | 3.1 |
| 6111007513 | 12.40 | 18.69 | 15-20% | 1681 | Ventura | 9.9 | 75 | 15.1 | 11.2 | 81.9 | 0.8 | 0.4 | 3.2 | 2.4 |
| 6009000501 | 12.39 | 18.68 | 15-20% | 3332 | Calaveras | 7.8 | 64.5 | 27.7 | 6.2 | 90.1 | 0.3 | 0.3 | 0.9 | 2.1 |
| 6073017304 | 12.39 | 18.67 | 15-20% | 5508 | San Diego | 9.4 | 75.6 | 15 | 27.3 | 66.8 | 0.4 | 0.2 | 3.4 | 1.9 |
| 6085504423 | 12.38 | 18.65 | 15-20% | 2373 | Santa Clara | 11.7 | 78.6 | 9.7 | 20.9 | 26.1 | 1.1 | 0.3 | 49.1 | 2.4 |
| 6085508102 | 12.38 | 18.64 | 15-20% | 3321 | Santa Clara | 17.4 | 72.5 | 10.1 | 4.3 | 29.3 | 0.8 | 0 | 62.2 | 3.4 |
| 6067007103 | 12.38 | 18.63 | 15-20% | 3850 | Sacramento | 13.6 | 83.8 | 2.6 | 19 | 33.9 | 13.4 | 0.2 | 28.1 | 5.5 |
| 6089012604 | 12.38 | 18.62 | 15-20% | 2198 | Shasta | 7.7 | 69.8 | 22.5 | 5.2 | 86.7 | 0.4 | 2.1 | 1.1 | 4.5 |
| 6037269000 | 12.37 | 18.60 | 15-20% | 5138 | Los Angeles | 10.4 | 67.6 | 22 | 8.4 | 77.1 | 3.1 | 0.2 | 7.7 | 3.4 |
| 6067009326 | 12.37 | 18.59 | 15-20% | 4804 | Sacramento | 14.2 | 77.6 | 8.2 | 13.6 | 43.9 | 7.3 | 0.3 | 30.1 | 4.8 |
| 6073009107 | 12.36 | 18.58 | 15-20% | 3688 | San Diego | 6.8 | 83.2 | 10 | 20 | 63.8 | 3.2 | 0.4 | 7.8 | 4.9 |
| 6059042335 | 12.35 | 18.56 | 15-20% | 5829 | Orange | 14.3 | 78.9 | 6.8 | 15 | 63.3 | 1.3 | 0.1 | 15.4 | 5 |
| 6083002012 | 12.35 | 18.55 | 15-20% | 3036 | Santa Barbara | 12.3 | 69.4 | 18.3 | 20 | 71.5 | 1.4 | 0.5 | 3.7 | 2.8 |
| 6073008340 | 12.33 | 18.54 | 15-20% | 8988 | San Diego | 8.5 | 84.9 | 6.6 | 10.5 | 47.4 | 1.8 | 0.1 | 36.3 | 3.8 |
| 6111005504 | 12.33 | 18.53 | 15-20% | 4320 | Ventura | 11.7 | 70 | 18.3 | 24.4 | 63.5 | 1.4 | 0.2 | 6.9 | 3.6 |
| 6001443104 | 12.33 | 18.51 | 15-20% | 5558 | Alameda | 13.4 | 77.4 | 9.2 | 5.3 | 20.5 | 1.1 | 0.1 | 69.7 | 3.3 |
| 6081607200 | 12.33 | 18.50 | 15-20% | 4197 | San Mateo | 10.6 | 76.4 | 13 | 25.3 | 45.1 | 2.3 | 0.1 | 23.3 | 3.8 |
| 6085508505 | 12.33 | 18.49 | 15-20% | 4392 | Santa Clara | 12.1 | 73.6 | 14.3 | 8.9 | 41 | 1.7 | 0.1 | 43.8 | 4.4 |
| 6085512024 | 12.32 | 18.48 | 15-20% | 4670 | Santa Clara | 14.5 | 75 | 10.5 | 23.2 | 43.2 | 8.9 | 0.3 | 18.6 | 5.8 |

| | | | | | | | | | | | | | | | |
|---|---|---|---|---|---|---|---|---|---|---|---|---|---|---|---|
| 6013361000 | 12.32 | 18.46 | 15-20% | 4475 | Contra Costa | 11 | 75.9 | 13.1 | 20.6 | 36.6 | 14.8 | 0.7 | 21.9 | 5.4 |
| 6111006800 | 12.32 | 18.45 | 15-20% | 3908 | Ventura | 10.9 | 76.5 | 12.6 | 28.4 | 64.6 | 0.7 | 0.5 | 3.2 | 2.6 |
| 6033001300 | 12.32 | 18.44 | 15-20% | 7575 | Lake | 11.8 | 74.7 | 13.5 | 15.7 | 77.6 | 1 | 1.4 | 1.5 | 2.9 |
| 6075016600 | 12.32 | 18.43 | 15-20% | 5069 | San Francisco | 4.7 | 89.6 | 5.7 | 8.8 | 73 | 4 | 0.2 | 9.3 | 4.7 |
| 6001422500 | 12.32 | 18.41 | 15-20% | 4658 | Alameda | 2.6 | 91.8 | 5.6 | 6.9 | 57.8 | 2.1 | 0.1 | 27.8 | 5.2 |
| 6037620501 | 12.30 | 18.40 | 15-20% | 5390 | Los Angeles | 13 | 77.4 | 9.6 | 14.1 | 66.4 | 2.3 | 0.1 | 12.3 | 4.8 |
| 6037620602 | 12.30 | 18.39 | 15-20% | 5376 | Los Angeles | 12.1 | 76.9 | 11 | 20.2 | 61.5 | 2.1 | 0.3 | 12.1 | 3.9 |
| 6095252105 | 12.29 | 18.38 | 15-20% | 3256 | Solano | 10.2 | 78.4 | 11.4 | 10.6 | 64.7 | 4.1 | 0.3 | 14.9 | 5.4 |
| 6073007800 | 12.29 | 18.36 | 15-20% | 5724 | San Diego | 13.7 | 81.6 | 4.7 | 25.9 | 62.2 | 3.2 | 0.3 | 4.4 | 4.1 |
| 6037262706 | 12.29 | 18.35 | 15-20% | 3563 | Los Angeles | 14.5 | 67.2 | 18.3 | 4.8 | 87.3 | 0.6 | 0.1 | 4.1 | 3.1 |
| 6065940500 | 12.28 | 18.34 | 15-20% | 2208 | Riverside | 2.5 | 59.8 | 37.7 | 5.8 | 88.5 | 1.2 | 0.9 | 1.9 | 1.7 |
| 6073019107 | 12.28 | 18.33 | 15-20% | 2104 | San Diego | 11.8 | 67.9 | 20.3 | 24.3 | 61 | 0.3 | 11.4 | 1.1 | 1.9 |
| 6001443103 | 12.28 | 18.31 | 15-20% | 4029 | Alameda | 8.9 | 80.4 | 10.7 | 2.4 | 13 | 0.8 | 0 | 81.5 | 2.2 |
| 6013333102 | 12.28 | 18.30 | 15-20% | 3855 | Contra Costa | 10 | 78 | 12 | 17.7 | 62.4 | 2.7 | 0.1 | 12.8 | 4.3 |
| 6079010703 | 12.28 | 18.29 | 15-20% | 3487 | San Luis Obispo | 11.4 | 75.6 | 13 | 19.8 | 68.3 | 0.6 | 0.4 | 8.9 | 2 |
| 6009000400 | 12.27 | 18.27 | 15-20% | 4032 | Calaveras | 6.9 | 68.5 | 24.6 | 6.7 | 86.2 | 0.2 | 3.2 | 0.9 | 2.9 |
| 6097150607 | 12.27 | 18.26 | 15-20% | 5369 | Sonoma | 14.8 | 76.6 | 8.6 | 14.1 | 71.6 | 1.2 | 0.3 | 9.6 | 3.2 |
| 6037139801 | 12.26 | 18.25 | 15-20% | 3539 | Los Angeles | 10.4 | 65.6 | 24 | 3.6 | 87.6 | 1.3 | 0 | 4.2 | 3.4 |
| 6067008207 | 12.25 | 18.24 | 15-20% | 4212 | Sacramento | 10.4 | 76.4 | 13.2 | 9.4 | 82.9 | 1.1 | 0.4 | 2.4 | 3.7 |
| 6065940900 | 12.25 | 18.22 | 15-20% | 1916 | Riverside | 2.7 | 47.6 | 49.7 | 10.3 | 84.6 | 1.7 | 0.5 | 2 | 0.8 |
| 6085503003 | 12.24 | 18.21 | 15-20% | 5099 | Santa Clara | 13 | 73.3 | 13.7 | 21.2 | 61.2 | 0.8 | 0.4 | 12.5 | 3.9 |
| 6097150303 | 12.24 | 18.20 | 15-20% | 4170 | Sonoma | 5.7 | 53.9 | 40.4 | 9.3 | 86.3 | 0.2 | 0.2 | 2.3 | 1.8 |
| 6065045606 | 12.24 | 18.19 | 15-20% | 2680 | Riverside | 11 | 70.7 | 18.3 | 43.9 | 51.9 | 0.7 | 0.5 | 2.2 | 0.8 |
| 6093000703 | 12.24 | 18.17 | 15-20% | 3362 | Siskiyou | 12.5 | 69.1 | 18.4 | 8.3 | 82.2 | 0.7 | 3.2 | 1.4 | 4.3 |
| 6065047900 | 12.23 | 18.16 | 15-20% | 11611 | Riverside | 14.9 | 79.1 | 6 | 25.6 | 52 | 6.3 | 0.2 | 12.6 | 3.3 |
| 6059063905 | 12.22 | 18.15 | 15-20% | 4375 | Orange | 10.6 | 75.4 | 14 | 20.3 | 67.8 | 1.1 | 0.2 | 7.6 | 3 |
| 6079010205 | 12.22 | 18.14 | 15-20% | 4159 | San Luis Obispo | 14 | 77.1 | 8.9 | 35.2 | 58.7 | 1.3 | 0.9 | 1.7 | 2.1 |
| 6065043252 | 12.21 | 18.12 | 15-20% | 6574 | Riverside | 18 | 75.9 | 6.1 | 19.5 | 53.4 | 4.3 | 1.7 | 16.3 | 4.7 |
| 6089012303 | 12.21 | 18.11 | 15-20% | 3913 | Shasta | 10.9 | 74.8 | 14.3 | 8.2 | 85 | 0.4 | 2 | 1.3 | 3.1 |
| 6093001000 | 12.21 | 18.10 | 15-20% | 6991 | Siskiyou | 8.5 | 70.9 | 20.6 | 7 | 86.2 | 1.1 | 0.6 | 1.8 | 3.3 |
| 6067009630 | 12.19 | 18.09 | 15-20% | 9389 | Sacramento | 19 | 75.5 | 5.5 | 19.2 | 24.7 | 12.8 | 0.2 | 36.5 | 6.6 |
| 6111007509 | 12.19 | 18.07 | 15-20% | 4161 | Ventura | 13.7 | 78 | 8.3 | 10 | 71.1 | 1.4 | 0.1 | 14 | 3.4 |
| 6001408100 | 12.19 | 18.06 | 15-20% | 5991 | Alameda | 9.4 | 73.8 | 16.8 | 7.7 | 36.1 | 30.5 | 0.1 | 20.2 | 5.4 |
| 6061022400 | 12.19 | 18.05 | 15-20% | 4396 | Placer | 17.6 | 71.6 | 10.8 | 8.2 | 72.2 | 1.8 | 0.4 | 13.4 | 4 |
| 6085506000 | 12.19 | 18.04 | 15-20% | 4617 | Santa Clara | 13.6 | 74.8 | 11.6 | 19.1 | 49.6 | 2 | 0.2 | 25.2 | 4 |
| 6037431600 | 12.18 | 18.02 | 15-20% | 4018 | Los Angeles | 8.8 | 71.4 | 19.8 | 9.7 | 21.7 | 0.5 | 0 | 66.2 | 1.9 |
| 6073008305 | 12.17 | 18.01 | 15-20% | 10482 | San Diego | 2.8 | 96.7 | 0.5 | 11.1 | 41.5 | 2.6 | 0.1 | 39.7 | 5 |
| 6037577504 | 12.17 | 18.00 | 15-20% | 1448 | Los Angeles | 5.1 | 76.9 | 18 | 10.7 | 81.3 | 1 | 0.3 | 3.7 | 2.9 |
| 6037430301 | 12.17 | 17.98 | 15-20% | 4422 | Los Angeles | 9.8 | 73 | 17.2 | 16.4 | 71.9 | 1.4 | 0.2 | 7.3 | 2.7 |
| 6001441501 | 12.16 | 17.97 | 15-20% | 6068 | Alameda | 14.4 | 77.1 | 8.5 | 6.7 | 13.2 | 4.7 | 0.2 | 68.1 | 7.1 |
| 6073017018 | 12.15 | 17.96 | 15-20% | 3834 | San Diego | 11.9 | 76.8 | 11.3 | 13.5 | 43 | 3.9 | 0.2 | 34 | 5.4 |
| 6093000500 | 12.15 | 17.95 | 15-20% | 2142 | Siskiyou | 8.9 | 72.4 | 18.7 | 6.7 | 69.3 | 0.4 | 17 | 0.7 | 5.9 |
| 6071010415 | 12.15 | 17.93 | 15-20% | 5682 | San Bernardino | 15.9 | 76 | 8.1 | 18.7 | 57.5 | 9.7 | 0.9 | 7.8 | 5.4 |
| 6037920322 | 12.15 | 17.92 | 15-20% | 2895 | Los Angeles | 11 | 70.8 | 18.2 | 24.4 | 65 | 2.1 | 0.1 | 6.3 | 2.1 |
| 6065044927 | 12.14 | 17.91 | 15-20% | 3801 | Riverside | 7.4 | 52.6 | 40 | 16.9 | 75.7 | 2.5 | 0.2 | 3.2 | 1.4 |
| 6045011002 | 12.12 | 17.90 | 15-20% | 5364 | Mendocino | 7.1 | 70.3 | 22.6 | 5.9 | 88.5 | 0.4 | 0.9 | 1.2 | 3.1 |
| 6067004004 | 12.11 | 17.88 | 15-20% | 6086 | Sacramento | 9.4 | 70.9 | 19.7 | 11.9 | 43.2 | 9.8 | 0.5 | 30 | 4.5 |
| 6001451201 | 12.11 | 17.87 | 15-20% | 6595 | Alameda | 14.4 | 77.9 | 7.7 | 18 | 64.4 | 2.6 | 0.5 | 10.4 | 4 |
| 6075032602 | 12.11 | 17.86 | 15-20% | 4316 | San Francisco | 7 | 73.4 | 19.6 | 4.1 | 32.9 | 1.1 | 0 | 58.2 | 3.6 |
| 6081607900 | 12.09 | 17.85 | 15-20% | 3182 | San Mateo | 9.2 | 74.9 | 15.9 | 10.7 | 54.1 | 1.8 | 0.2 | 28.7 | 4.5 |
| 6111008800 | 12.09 | 17.83 | 15-20% | 5632 | Ventura | 15.9 | 75.1 | 9 | 73.5 | 17.1 | 3.4 | 0.3 | 4.1 | 1.6 |
| 6085508202 | 12.08 | 17.82 | 15-20% | 7684 | Santa Clara | 15.8 | 71.1 | 13.1 | 12 | 41.9 | 1.2 | 0.2 | 41 | 3.7 |
| 6073016607 | 12.08 | 17.81 | 15-20% | 6365 | San Diego | 11.8 | 76.2 | 12 | 15.2 | 76 | 0.8 | 0.3 | 4 | 3.6 |
| 6059099214 | 12.08 | 17.80 | 15-20% | 3498 | Orange | 9.9 | 68.8 | 21.3 | 10.6 | 75.6 | 0.6 | 0.3 | 9.8 | 3.1 |
| 6059032051 | 12.07 | 17.78 | 15-20% | 4580 | Orange | 13.4 | 79.9 | 6.7 | 31 | 55.4 | 2.1 | 0.2 | 7.9 | 3.3 |
| 6037651304 | 12.07 | 17.77 | 15-20% | 5114 | Los Angeles | 9.1 | 74.2 | 16.7 | 10.2 | 77.4 | 1 | 0.2 | 7.5 | 3.8 |
| 6081614000 | 12.06 | 17.76 | 15-20% | 5458 | San Mateo | 12.9 | 75.6 | 11.5 | 16.3 | 31.1 | 3.1 | 0.3 | 43.9 | 5.4 |
| 6019005522 | 12.06 | 17.74 | 15-20% | 4467 | Fresno | 17.4 | 75.6 | 7 | 16.3 | 61.5 | 1.9 | 0.4 | 16.7 | 3.3 |
| 6075045200 | 12.05 | 17.73 | 15-20% | 6474 | San Francisco | 9.3 | 76.2 | 14.5 | 6.1 | 43.1 | 1.4 | 0.2 | 44.5 | 4.6 |
| 6029006006 | 12.05 | 17.72 | 15-20% | 3519 | Kern | 9.5 | 72 | 18.5 | 13.7 | 80.4 | 0.8 | 0.7 | 1.8 | 2.5 |
| 6085512047 | 12.05 | 17.71 | 15-20% | 5461 | Santa Clara | 12.3 | 75.5 | 12.2 | 28.2 | 50.1 | 2.9 | 0.3 | 13.9 | 4.5 |
| 6073018608 | 12.05 | 17.69 | 15-20% | 3175 | San Diego | 13.4 | 73.1 | 13.5 | 24.3 | 48.9 | 8.5 | 0.5 | 11.9 | 6 |
| 6037430502 | 12.04 | 17.68 | 15-20% | 6745 | Los Angeles | 10.5 | 72 | 17.5 | 15.6 | 71.2 | 2 | 0.3 | 7.4 | 3.5 |
| 6059099311 | 12.04 | 17.67 | 15-20% | 3598 | Orange | 7 | 84.9 | 8.1 | 11.5 | 78.5 | 0.6 | 0.4 | 6 | 3.1 |
| 6055201401 | 12.04 | 17.66 | 15-20% | 3114 | Napa | 5.9 | 65.2 | 28.9 | 8.9 | 85.7 | 0.5 | 0.2 | 2.9 | 1.8 |
| 6095252908 | 12.04 | 17.64 | 15-20% | 3626 | Solano | 13.9 | 79.1 | 7 | 24 | 56.4 | 7.9 | 0.4 | 4.8 | 6.4 |

| | | | | | | | | | | | | | | |
|---|---|---|---|---|---|---|---|---|---|---|---|---|---|---|
| 6001400300 | 12.04 | 17.63 | 15-20% | 4865 | Alameda | 11.1 | 78.8 | 10.1 | 8.2 | 66.9 | 10.5 | 0.2 | 8.7 | 5.5 |
| 6075035400 | 12.02 | 17.62 | 15-20% | 6691 | San Francisco | 8.2 | 76.6 | 15.2 | 7.4 | 31.9 | 1.5 | 0.3 | 55.6 | 3.4 |
| 6035040600 | 12.02 | 17.61 | 15-20% | 3781 | Lassen | 8.6 | 80.7 | 10.7 | 14 | 62.2 | 13.5 | 3.4 | 2.3 | 4.7 |
| 6023000900 | 12.01 | 17.59 | 15-20% | 5074 | Humboldt | 8.7 | 76.4 | 14.9 | 5.1 | 86.2 | 0.9 | 1.4 | 2.4 | 4 |
| 6113010402 | 12.01 | 17.58 | 15-20% | 3832 | Yolo | 18.3 | 76.2 | 5.5 | 17.8 | 44.2 | 8.4 | 0.3 | 23.6 | 5.8 |
| 6055201007 | 12.01 | 17.57 | 15-20% | 4089 | Napa | 13.3 | 77.6 | 9.1 | 32 | 26.1 | 7.1 | 0.3 | 29.7 | 4.8 |
| 6085506204 | 12.01 | 17.56 | 15-20% | 6064 | Santa Clara | 14.3 | 73.2 | 12.5 | 13 | 36.7 | 1.5 | 0.2 | 45.5 | 3.2 |
| 6085513000 | 12.00 | 17.54 | 15-20% | 8215 | Santa Clara | 4.3 | 95.6 | 0.1 | 11 | 43.4 | 4.7 | 0.5 | 33.6 | 6.8 |
| 6087121300 | 12.00 | 17.53 | 15-20% | 4144 | Santa Cruz | 12.2 | 71.1 | 16.7 | 26.7 | 65.7 | 1.3 | 0.4 | 3.4 | 2.5 |
| 6037910808 | 12.00 | 17.52 | 15-20% | 3537 | Los Angeles | 12.9 | 80.5 | 6.6 | 27.9 | 61.9 | 2 | 0.3 | 5.4 | 2.5 |
| 6081608200 | 11.99 | 17.51 | 15-20% | 3614 | San Mateo | 12.4 | 71.8 | 15.8 | 8.7 | 44.2 | 1.7 | 0.1 | 40.7 | 4.6 |
| 6085502902 | 11.98 | 17.49 | 15-20% | 7200 | Santa Clara | 14.1 | 71.2 | 14.7 | 17.6 | 65.3 | 1.3 | 0.2 | 10.8 | 4.7 |
| 6055202000 | 11.98 | 17.48 | 15-20% | 5155 | Napa | 12.7 | 68.6 | 18.7 | 49.4 | 47.7 | 0.4 | 0.3 | 0.9 | 1.3 |
| 6059042113 | 11.97 | 17.47 | 15-20% | 4364 | Orange | 7.8 | 67.6 | 24.6 | 10.6 | 82.8 | 0.4 | 0.7 | 3.2 | 2.3 |
| 6071000804 | 11.97 | 17.45 | 15-20% | 3255 | San Bernardino | 9.7 | 73.3 | 17 | 18.2 | 70.1 | 1.6 | 0.2 | 8.1 | 2 |
| 6037480202 | 11.96 | 17.44 | 15-20% | 2534 | Los Angeles | 14.2 | 68.8 | 17 | 24.3 | 33.1 | 0.5 | 0 | 39.5 | 2.6 |
| 6075031301 | 11.96 | 17.43 | 15-20% | 3826 | San Francisco | 8.5 | 75.8 | 15.7 | 7.5 | 21.8 | 18 | 0.1 | 48.7 | 3.9 |
| 6059063101 | 11.95 | 17.42 | 15-20% | 2733 | Orange | 10.1 | 81 | 8.9 | 19.6 | 66.9 | 1.8 | 0.5 | 8 | 3.3 |
| 6001450502 | 11.94 | 17.40 | 15-20% | 4185 | Alameda | 12.1 | 77.3 | 10.6 | 10 | 60.3 | 3.2 | 0.2 | 21.2 | 5.2 |
| 6061023700 | 11.93 | 17.39 | 15-20% | 3347 | Placer | 0 | 21 | 79 | 3.2 | 92.2 | 0.6 | 0.3 | 3 | 0.7 |
| 6019005912 | 11.93 | 17.38 | 15-20% | 3280 | Fresno | 9.7 | 72.6 | 17.7 | 16.7 | 72 | 0.4 | 0.8 | 7.7 | 2.4 |
| 6089010803 | 11.90 | 17.37 | 15-20% | 4908 | Shasta | 11.5 | 72.6 | 15.9 | 7.6 | 81.9 | 1 | 1.2 | 4.9 | 3.4 |
| 6097153809 | 11.90 | 17.35 | 15-20% | 4336 | Sonoma | 12.8 | 73.5 | 13.7 | 28.8 | 63.1 | 0.7 | 1.4 | 3.1 | 3 |
| 6073008351 | 11.89 | 17.34 | 15-20% | 4261 | San Diego | 10.5 | 79.1 | 10.4 | 13.9 | 28.6 | 4.4 | 0.3 | 48.1 | 4.7 |
| 6071008703 | 11.89 | 17.33 | 15-20% | 7745 | San Bernardino | 8.7 | 75.5 | 15.8 | 15.4 | 78.2 | 1.5 | 0.5 | 2.3 | 2.2 |
| 6059011717 | 11.89 | 17.32 | 15-20% | 2746 | Orange | 11.8 | 73.1 | 15.1 | 19.7 | 66.9 | 1.5 | 0.1 | 8.3 | 3.6 |
| 6089010805 | 11.88 | 17.30 | 15-20% | 5006 | Shasta | 14.1 | 74 | 11.9 | 7.6 | 86 | 0.8 | 1.1 | 2 | 2.5 |
| 6037101122 | 11.88 | 17.29 | 15-20% | 3664 | Los Angeles | 9.6 | 77 | 13.4 | 15.7 | 66.5 | 0.7 | 0.1 | 13.5 | 3.4 |
| 6041110100 | 11.86 | 17.28 | 15-20% | 5849 | Marin | 8.5 | 73 | 18.5 | 16.5 | 71.8 | 2.1 | 0.1 | 6.2 | 3.3 |
| 6087121800 | 11.85 | 17.27 | 15-20% | 4796 | Santa Cruz | 8.1 | 75.3 | 16.6 | 14.6 | 77.5 | 0.9 | 0.3 | 3.6 | 3.2 |
| 6073009602 | 11.85 | 17.25 | 15-20% | 3775 | San Diego | 9.7 | 67.5 | 22.8 | 14.3 | 71.9 | 2.4 | 0.4 | 7.6 | 3.4 |
| 6079011101 | 11.85 | 17.24 | 15-20% | 3592 | San Luis Obispo | 4.5 | 88 | 7.5 | 15.5 | 75.8 | 1.4 | 0.4 | 3.5 | 3.4 |
| 6083002922 | 11.85 | 17.23 | 15-20% | 8839 | Santa Barbara | 4.4 | 95.1 | 0.5 | 22.4 | 50.8 | 3.1 | 0.2 | 18.7 | 4.8 |
| 6079010602 | 11.84 | 17.22 | 15-20% | 3836 | San Luis Obispo | 7.6 | 67.1 | 25.3 | 14 | 80.2 | 0.4 | 0.7 | 2.6 | 2.1 |
| 6065042208 | 11.83 | 17.20 | 15-20% | 2378 | Riverside | 9.3 | 69.8 | 20.9 | 17.4 | 71.6 | 3.5 | 0.2 | 4.8 | 2.5 |
| 6073013606 | 11.83 | 17.19 | 15-20% | 6386 | San Diego | 11.9 | 74.1 | 14 | 16.7 | 65.6 | 6.1 | 0.2 | 6 | 5.3 |
| 6073000201 | 11.82 | 17.18 | 15-20% | 1801 | San Diego | 8.1 | 70 | 21.9 | 10.1 | 81 | 1.6 | 0.5 | 4.4 | 2.4 |
| 6001450750 | 11.82 | 17.16 | 15-20% | 3618 | Alameda | 15.5 | 75.6 | 8.9 | 11.5 | 40.8 | 7.8 | 0.2 | 33.1 | 6.6 |
| 6065045122 | 11.82 | 17.15 | 15-20% | 1427 | Riverside | 2.4 | 39.6 | 58 | 4.3 | 90.3 | 1.1 | 1 | 1.8 | 1.5 |
| 6097153403 | 11.82 | 17.14 | 15-20% | 3840 | Sonoma | 8.4 | 73.6 | 18 | 8.9 | 85.1 | 0.7 | 0.7 | 1.9 | 2.7 |
| 6075011902 | 11.81 | 17.13 | 15-20% | 2598 | San Francisco | 3.3 | 87.7 | 9 | 12.2 | 54.5 | 2.1 | 0.3 | 27.4 | 3.5 |
| 6007000601 | 11.81 | 17.11 | 15-20% | 3304 | Butte | 11.9 | 78 | 10.1 | 12.2 | 79.6 | 0.9 | 0.8 | 3.1 | 3.3 |
| 6089010704 | 11.81 | 17.10 | 15-20% | 4362 | Shasta | 11.6 | 66.3 | 22.1 | 8.2 | 82.6 | 1 | 2.1 | 2 | 4 |
| 6085503325 | 11.81 | 17.09 | 15-20% | 4448 | Santa Clara | 12.6 | 78.7 | 8.7 | 31 | 9.7 | 3 | 0.1 | 54.5 | 1.7 |
| 6037577300 | 11.80 | 17.08 | 15-20% | 5547 | Los Angeles | 7.1 | 84.7 | 8.2 | 14.7 | 74.2 | 2.2 | 0.3 | 5.5 | 3.1 |
| 6013345202 | 11.80 | 17.06 | 15-20% | 7816 | Contra Costa | 14 | 76.8 | 9.2 | 9.7 | 61.6 | 3.3 | 0.2 | 20.3 | 5 |
| 6113010513 | 11.80 | 17.05 | 15-20% | 2817 | Yolo | 6.6 | 89.3 | 4.1 | 11.4 | 65.8 | 1.3 | 0.3 | 17.3 | 3.9 |
| 6059021923 | 11.79 | 17.04 | 15-20% | 6643 | Orange | 13.7 | 78.3 | 8 | 14.6 | 57.1 | 2 | 0.2 | 22 | 4 |
| 6095252913 | 11.79 | 17.03 | 15-20% | 4910 | Solano | 12.4 | 79.4 | 8.2 | 19.7 | 57.8 | 8.6 | 0.1 | 8.1 | 5.6 |
| 6017030804 | 11.79 | 17.01 | 15-20% | 6377 | El Dorado | 10.2 | 72.3 | 17.5 | 8.9 | 84.2 | 0.6 | 2 | 1.5 | 2.9 |
| 6059062604 | 11.79 | 17.00 | 15-20% | 15174 | Orange | 14.8 | 75.7 | 9.5 | 6.1 | 57.7 | 0.7 | 0.1 | 31.4 | 4 |
| 6073020405 | 11.78 | 16.99 | 15-20% | 3412 | San Diego | 9.3 | 69.1 | 21.6 | 10.8 | 79.7 | 0.5 | 0.1 | 6.6 | 2.3 |
| 6085505500 | 11.77 | 16.98 | 15-20% | 3911 | Santa Clara | 12.7 | 72.5 | 14.8 | 20.6 | 52.5 | 2.1 | 0.3 | 20.5 | 4 |
| 6013322000 | 11.77 | 16.96 | 15-20% | 6085 | Contra Costa | 10.1 | 72.1 | 17.8 | 11.3 | 70.2 | 1.4 | 0.2 | 13 | 3.9 |
| 6059042311 | 11.77 | 16.95 | 15-20% | 5996 | Orange | 9.9 | 69.9 | 20.2 | 18.9 | 74.5 | 0.4 | 0.4 | 3.8 | 2 |
| 6061022013 | 11.77 | 16.94 | 15-20% | 2934 | Placer | 8.5 | 76.2 | 15.3 | 5.4 | 89.5 | 0.3 | 1.3 | 0.6 | 2.8 |
| 6065045120 | 11.77 | 16.93 | 15-20% | 4580 | Riverside | 13.7 | 70.1 | 16.2 | 51.2 | 43.9 | 1.9 | 0.2 | 1.2 | 1.5 |
| 6085508001 | 11.77 | 16.91 | 15-20% | 7377 | Santa Clara | 16.7 | 70.2 | 13.1 | 3.5 | 28.9 | 0.6 | 0.1 | 63.4 | 3.6 |
| 6085508401 | 11.76 | 16.90 | 15-20% | 6834 | Santa Clara | 17.2 | 68.2 | 14.6 | 8.2 | 47 | 1.1 | 0.1 | 38.9 | 4.8 |
| 6083003005 | 11.76 | 16.89 | 15-20% | 4999 | Santa Barbara | 11.8 | 75.7 | 12.5 | 41.8 | 48.4 | 1.3 | 0.3 | 5.7 | 2.5 |
| 6075010200 | 11.75 | 16.87 | 15-20% | 4143 | San Francisco | 4.7 | 77.9 | 17.4 | 5.1 | 81.1 | 0.6 | 0.1 | 10.2 | 3 |
| 6059062649 | 11.75 | 16.86 | 15-20% | 3257 | Orange | 3.4 | 44.5 | 52.1 | 9.2 | 80.5 | 1.2 | 0.1 | 7.6 | 1.4 |
| 6071011204 | 11.74 | 16.85 | 15-20% | 1271 | San Bernardino | 7.8 | 70 | 22.2 | 14.9 | 80.9 | 0.5 | 0.2 | 1.6 | 2 |
| 6001450501 | 11.74 | 16.84 | 15-20% | 3129 | Alameda | 11.4 | 75.5 | 13.1 | 11.9 | 64.9 | 3 | 0.3 | 14.8 | 5.1 |
| 6111005911 | 11.74 | 16.82 | 15-20% | 3854 | Ventura | 10.7 | 73.7 | 15.6 | 11.3 | 77.4 | 1.4 | 0.2 | 6.7 | 3.1 |
| 6017030704 | 11.73 | 16.81 | 15-20% | 5961 | El Dorado | 14.5 | 71.3 | 14.2 | 11.3 | 73.4 | 1.3 | 0.5 | 9.9 | 3.7 |

| | | | | | | | | | | | | | | |
|---|---|---|---|---|---|---|---|---|---|---|---|---|---|---|
| 6097153704 | 11.72 | 16.80 | 15-20% | 3728 | Sonoma | 7.7 | 78.6 | 13.7 | 12.8 | 80.3 | 0.8 | 1 | 1.2 | 4 |
| 6001404102 | 11.72 | 16.79 | 15-20% | 2283 | Alameda | 3.2 | 65.9 | 30.9 | 6.5 | 67.5 | 8 | 0.2 | 13.4 | 4.4 |
| 6001403800 | 11.72 | 16.77 | 15-20% | 3461 | Alameda | 8.4 | 81.7 | 9.9 | 8.4 | 62.9 | 9.7 | 0.2 | 13.5 | 5.4 |
| 6073013505 | 11.72 | 16.76 | 15-20% | 4725 | San Diego | 11.5 | 77 | 11.5 | 24 | 55.2 | 11 | 0.5 | 4.6 | 4.8 |
| 6085503323 | 11.71 | 16.75 | 15-20% | 4688 | Santa Clara | 13.6 | 76.6 | 9.8 | 32.2 | 12.4 | 3.6 | 0 | 49.3 | 2.5 |
| 6111005401 | 11.70 | 16.74 | 15-20% | 4073 | Ventura | 11.4 | 73.8 | 14.8 | 25.8 | 63.9 | 1.4 | 0.2 | 6.1 | 2.7 |
| 6037701501 | 11.69 | 16.72 | 15-20% | 4986 | Los Angeles | 8.3 | 77.6 | 14.1 | 7.5 | 78 | 2.5 | 0.2 | 8.2 | 3.6 |
| 6001441925 | 11.69 | 16.71 | 15-20% | 6159 | Alameda | 13.9 | 81.4 | 4.7 | 8.3 | 21.7 | 4.4 | 0.2 | 59.1 | 6.2 |
| 6037910209 | 11.68 | 16.70 | 15-20% | 4397 | Los Angeles | 12.5 | 80.1 | 7.4 | 29.5 | 48.3 | 11.3 | 0.5 | 7.4 | 3.1 |
| 6037269500 | 11.68 | 16.69 | 15-20% | 4043 | Los Angeles | 18 | 67.3 | 14.7 | 3.9 | 86.3 | 1.5 | 0 | 5.6 | 2.7 |
| 6027000100 | 11.68 | 16.67 | 15-20% | 2757 | Inyo | 11.1 | 65.5 | 23.4 | 18.6 | 77.2 | 0.1 | 1 | 1.7 | 1.3 |
| 6037621324 | 11.68 | 16.66 | 15-20% | 3842 | Los Angeles | 6.1 | 81 | 12.9 | 11.5 | 71.2 | 2.8 | 0.2 | 10.5 | 3.8 |
| 6067005702 | 11.67 | 16.65 | 15-20% | 4795 | Sacramento | 12.4 | 70 | 17.6 | 6.4 | 85.1 | 1 | 0.3 | 4.2 | 3 |
| 6073021202 | 11.66 | 16.64 | 15-20% | 3156 | San Diego | 10.2 | 77.9 | 11.9 | 17.5 | 68 | 1.2 | 9.1 | 1.7 | 2.5 |
| 6075047701 | 11.65 | 16.62 | 15-20% | 4334 | San Francisco | 6.5 | 76.4 | 17.1 | 6.8 | 36.9 | 1.9 | 0.2 | 50.1 | 4.1 |
| 6087121700 | 11.65 | 16.61 | 15-20% | 7458 | Santa Cruz | 11.6 | 76.3 | 12.1 | 25.9 | 63.6 | 1.4 | 0.3 | 5.4 | 3.3 |
| 6085512001 | 11.65 | 16.60 | 15-20% | 6774 | Santa Clara | 17.2 | 76.4 | 6.4 | 23.4 | 27.5 | 3.4 | 0.3 | 42.2 | 3.2 |
| 6001442200 | 11.65 | 16.58 | 15-20% | 6875 | Alameda | 12.3 | 74.1 | 13.6 | 6.1 | 26.2 | 1.4 | 0.1 | 63.6 | 2.6 |
| 6113010607 | 11.65 | 16.57 | 15-20% | 4095 | Yolo | 12.3 | 75.2 | 12.5 | 11.4 | 66.6 | 2.3 | 0.3 | 15 | 4.5 |
| 6053014105 | 11.63 | 16.56 | 15-20% | 2688 | Monterey | 10.6 | 86.8 | 2.6 | 22.4 | 50.5 | 8.9 | 0.7 | 9.7 | 7.7 |
| 6093001200 | 11.62 | 16.55 | 15-20% | 1409 | Siskiyou | 7.8 | 65.5 | 26.7 | 6.2 | 89.4 | 0.6 | 1.1 | 0.4 | 2.3 |
| 6059099408 | 11.62 | 16.53 | 15-20% | 4332 | Orange | 13.6 | 72 | 14.4 | 13.4 | 70.8 | 0.8 | 0.2 | 11.6 | 3.2 |
| 6097153804 | 11.62 | 16.52 | 15-20% | 3239 | Sonoma | 11.9 | 76.3 | 11.8 | 26.9 | 65.8 | 0.7 | 0.6 | 3.4 | 2.6 |
| 6073015501 | 11.62 | 16.51 | 15-20% | 4955 | San Diego | 10.2 | 78 | 11.8 | 16.1 | 78.2 | 0.9 | 0.8 | 1.8 | 2.3 |
| 6075010900 | 11.62 | 16.50 | 15-20% | 4320 | San Francisco | 3.6 | 80.1 | 16.3 | 6.2 | 67.6 | 0.9 | 0.1 | 22.1 | 3.2 |
| 6013335000 | 11.62 | 16.48 | 15-20% | 3358 | Contra Costa | 11.7 | 76.4 | 11.9 | 26.8 | 59.7 | 2 | 0.4 | 7.3 | 3.9 |
| 6037264000 | 11.62 | 16.47 | 15-20% | 3358 | Los Angeles | 12.3 | 65.1 | 22.6 | 4 | 87.2 | 0.6 | 0.1 | 4.4 | 3.6 |
| 6013334001 | 11.61 | 16.46 | 15-20% | 3749 | Contra Costa | 12.3 | 73.1 | 14.6 | 20.4 | 61.3 | 2.9 | 0.5 | 9.4 | 5.5 |
| 6073020807 | 11.61 | 16.45 | 15-20% | 2599 | San Diego | 9.2 | 75.8 | 15 | 18.3 | 77.9 | 0.3 | 0.8 | 0.9 | 1.8 |
| 6013333101 | 11.59 | 16.43 | 15-20% | 4091 | Contra Costa | 11.4 | 75.7 | 12.9 | 20 | 61.2 | 2.4 | 0.5 | 11.3 | 4.5 |
| 6085509106 | 11.59 | 16.42 | 15-20% | 4171 | Santa Clara | 13.1 | 77.1 | 9.8 | 26.1 | 34.3 | 2.3 | 0.2 | 34 | 3.1 |
| 6061021203 | 11.59 | 16.41 | 15-20% | 6536 | Placer | 12.3 | 75.1 | 12.6 | 8.7 | 83.3 | 0.5 | 0.8 | 2.9 | 3.7 |
| 6073016613 | 11.59 | 16.40 | 15-20% | 1860 | San Diego | 11.6 | 77.3 | 11.1 | 15.5 | 77.3 | 0.6 | 0.4 | 3.8 | 2.3 |
| 6061020200 | 11.58 | 16.38 | 15-20% | 6146 | Placer | 9 | 73.9 | 17.1 | 6.3 | 88.5 | 0.4 | 1.4 | 0.8 | 2.6 |
| 6029005402 | 11.58 | 16.37 | 15-20% | 5094 | Kern | 14.1 | 70.8 | 15.1 | 14.2 | 74.2 | 3.1 | 0.7 | 4.6 | 3.2 |
| 6067008204 | 11.58 | 16.36 | 15-20% | 4495 | Sacramento | 11.5 | 72.1 | 16.4 | 11 | 82.7 | 0.8 | 0.4 | 2.2 | 2.9 |
| 6059062648 | 11.57 | 16.35 | 15-20% | 2774 | Orange | 0.1 | 18.4 | 81.5 | 4.1 | 85.4 | 0.6 | 0.1 | 8.4 | 1.2 |
| 6061021130 | 11.57 | 16.33 | 15-20% | 2641 | Placer | 9.3 | 80.2 | 10.5 | 10.6 | 73.4 | 2 | 0.3 | 9.7 | 4 |
| 6051000101 | 11.57 | 16.32 | 15-20% | 3463 | Mono | 10.8 | 77.1 | 12.1 | 13 | 80.5 | 0.1 | 2.3 | 1.4 | 2.7 |
| 6097151310 | 11.56 | 16.31 | 15-20% | 6143 | Sonoma | 7.1 | 88.7 | 4.2 | 16.6 | 69.4 | 2.1 | 0.3 | 6.7 | 4.9 |
| 6059032003 | 11.56 | 16.29 | 15-20% | 4852 | Orange | 9 | 75.4 | 15.6 | 14.5 | 75.6 | 0.4 | 0.2 | 6.6 | 2.7 |
| 6037141700 | 11.54 | 16.28 | 15-20% | 3091 | Los Angeles | 12 | 71.2 | 16.8 | 5 | 83.2 | 2.3 | 0 | 5.8 | 3.6 |
| 6017030505 | 11.53 | 16.27 | 15-20% | 2704 | El Dorado | 10.1 | 80.2 | 9.7 | 6.5 | 87.4 | 0.9 | 0.4 | 2.3 | 2.5 |
| 6017031302 | 11.53 | 16.26 | 15-20% | 4701 | El Dorado | 10.9 | 71.3 | 17.8 | 12.5 | 82.6 | 0.1 | 1.3 | 0.9 | 2.6 |
| 6073016807 | 11.53 | 16.24 | 15-20% | 7135 | San Diego | 11.8 | 76.5 | 11.7 | 18.6 | 75.2 | 1.6 | 0.5 | 1.7 | 2.3 |
| 6065043244 | 11.52 | 16.23 | 15-20% | 7220 | Riverside | 14.4 | 71.4 | 14.2 | 25.6 | 53.1 | 5.4 | 0.4 | 11.7 | 3.8 |
| 6059021916 | 11.52 | 16.22 | 15-20% | 3529 | Orange | 9 | 68.4 | 22.6 | 10.3 | 67.2 | 1.3 | 0.3 | 17.9 | 3 |
| 6073019803 | 11.52 | 16.21 | 15-20% | 4465 | San Diego | 12.4 | 76.8 | 10.8 | 15.7 | 69.5 | 1.3 | 0.5 | 9 | 3.9 |
| 6073017701 | 11.52 | 16.19 | 15-20% | 5275 | San Diego | 10.1 | 81.2 | 8.7 | 17.8 | 75.8 | 0.6 | 0.3 | 2.8 | 2.8 |
| 6037189400 | 11.52 | 16.18 | 15-20% | 3448 | Los Angeles | 7.9 | 80.7 | 11.4 | 6.2 | 81.6 | 3.1 | 0.2 | 5 | 3.8 |
| 6013356002 | 11.51 | 16.17 | 15-20% | 5375 | Contra Costa | 9.8 | 76.9 | 13.3 | 14.2 | 35.9 | 14.1 | 0.1 | 31.3 | 4.5 |
| 6065044520 | 11.50 | 16.16 | 15-20% | 1704 | Riverside | 7.9 | 58.2 | 33.9 | 31.9 | 63.2 | 0.8 | 0.5 | 1.6 | 2 |
| 6059099235 | 11.50 | 16.14 | 15-20% | 4619 | Orange | 10 | 74.5 | 15.5 | 16 | 69.2 | 0.9 | 0.3 | 10 | 3.6 |
| 6081608502 | 11.49 | 16.13 | 15-20% | 2637 | San Mateo | 9.8 | 78.6 | 11.6 | 19 | 45.8 | 1.9 | 0.1 | 29.1 | 4.1 |
| 6001421900 | 11.48 | 16.12 | 15-20% | 3632 | Alameda | 10.7 | 76.3 | 13 | 9.1 | 63.1 | 8 | 0.1 | 13.8 | 5.8 |
| 6017031402 | 11.48 | 16.11 | 15-20% | 5896 | El Dorado | 7.8 | 75 | 17.2 | 8 | 85.5 | 0.4 | 1.2 | 1.2 | 3.8 |
| 6073008513 | 11.46 | 16.09 | 15-20% | 2691 | San Diego | 10.1 | 72.8 | 17.1 | 11.4 | 75.4 | 1.5 | 0.4 | 8 | 3.3 |
| 6073008348 | 11.46 | 16.08 | 15-20% | 5259 | San Diego | 11.3 | 80.3 | 8.4 | 12.4 | 29.5 | 2.4 | 0.3 | 49.6 | 5.7 |
| 6111005907 | 11.46 | 16.07 | 15-20% | 3635 | Ventura | 6.4 | 59.1 | 34.5 | 5.5 | 86.5 | 0.6 | 0.2 | 4.3 | 2.9 |
| 6059099416 | 11.46 | 16.05 | 15-20% | 4444 | Orange | 9.2 | 85.4 | 5.4 | 17 | 68.9 | 1 | 0.3 | 8 | 4.7 |
| 6033001100 | 11.46 | 16.04 | 15-20% | 3865 | Lake | 8.1 | 76.5 | 15.4 | 7.1 | 86.8 | 0.6 | 1.4 | 0.9 | 3.2 |
| 6037920018 | 11.46 | 16.03 | 15-20% | 2277 | Los Angeles | 12.4 | 80.7 | 6.9 | 18.4 | 71 | 1.3 | 0.2 | 6.5 | 2.7 |
| 6037463800 | 11.45 | 16.02 | 15-20% | 3869 | Los Angeles | 10.6 | 68.4 | 21 | 13.6 | 67 | 3.3 | 0.2 | 12.7 | 3.2 |
| 6075032802 | 11.44 | 16.00 | 15-20% | 4047 | San Francisco | 8 | 75.5 | 16.5 | 3.9 | 28.6 | 0.7 | 0.1 | 64.3 | 2.4 |
| 6017031404 | 11.44 | 15.99 | 15-20% | 2407 | El Dorado | 8.9 | 73.9 | 17.2 | 6.6 | 89.1 | 0.3 | 1.2 | 0.8 | 1.9 |
| 6073020304 | 11.43 | 15.98 | 15-20% | 6061 | San Diego | 11.1 | 69.2 | 19.7 | 17.9 | 71.6 | 1.1 | 0.3 | 6.5 | 2.6 |

| | | | | | | | | | | | | | | | |
|---|---|---|---|---|---|---|---|---|---|---|---|---|---|---|---|
| 6113011203 | 11.42 | 15.97 | 15-20% | 2561 | Yolo | 10.6 | 71.7 | 17.7 | 22.6 | 71.1 | 0.5 | 0.8 | 3.2 | 1.7 |
| 6071000813 | 11.42 | 15.95 | 15-20% | 3449 | San Bernardino | 9.3 | 77 | 13.7 | 19.8 | 60.7 | 3.4 | 0.2 | 13.6 | 2.3 |
| 6013355111 | 11.42 | 15.94 | 15-20% | 6343 | Contra Costa | 14.2 | 80.2 | 5.6 | 27.8 | 30 | 21 | 0.5 | 16.1 | 4.6 |
| 6097152906 | 11.41 | 15.93 | 15-20% | 5234 | Sonoma | 13.2 | 76.4 | 10.4 | 19.5 | 67.8 | 2.5 | 1 | 6.1 | 3.1 |
| 6089011703 | 11.40 | 15.92 | 15-20% | 3282 | Shasta | 13 | 71.9 | 15.1 | 9.3 | 82.1 | 0.5 | 3.3 | 1.7 | 3.1 |
| 6013388000 | 11.37 | 15.90 | 15-20% | 2576 | Contra Costa | 11.7 | 74.4 | 13.9 | 12 | 47.8 | 5.4 | 0.2 | 27.4 | 7.1 |
| 6085506606 | 11.37 | 15.89 | 15-20% | 4453 | Santa Clara | 13.9 | 74.1 | 12 | 21.1 | 46.9 | 3.5 | 0.3 | 23.6 | 4.5 |
| 6083001903 | 11.36 | 15.88 | 15-20% | 5764 | Santa Barbara | 10 | 69.5 | 20.5 | 27.7 | 68.4 | 0.6 | 0.6 | 1.3 | 1.5 |
| 6065045117 | 11.35 | 15.87 | 15-20% | 3969 | Riverside | 7.1 | 68 | 24.9 | 19 | 75.4 | 1.3 | 0.4 | 2.6 | 1.4 |
| 6003010000 | 11.34 | 15.85 | 15-20% | 1175 | Alpine | 12.8 | 73.1 | 14.1 | 7.1 | 72.5 | 0 | 17.9 | 0.6 | 1.9 |
| 6083000600 | 11.34 | 15.84 | 15-20% | 4629 | Santa Barbara | 7 | 73 | 20 | 20.3 | 72.8 | 0.9 | 0.3 | 3.2 | 2.5 |
| 6081610000 | 11.34 | 15.83 | 15-20% | 4531 | San Mateo | 12 | 76.3 | 11.7 | 24 | 63 | 1.8 | 0.1 | 7.9 | 3.2 |
| 6059032047 | 11.34 | 15.82 | 15-20% | 3652 | Orange | 12.3 | 82.6 | 5.1 | 20.4 | 63.4 | 3.3 | 0.7 | 8.2 | 4.1 |
| 6075015700 | 11.34 | 15.80 | 15-20% | 7832 | San Francisco | 5.2 | 85.9 | 8.9 | 10.5 | 53 | 4.8 | 0.1 | 26.2 | 5.3 |
| 6085508507 | 11.33 | 15.79 | 15-20% | 3066 | Santa Clara | 15 | 79.6 | 5.4 | 14.7 | 20.3 | 2.4 | 0.3 | 59.3 | 3 |
| 6037573601 | 11.33 | 15.78 | 15-20% | 6114 | Los Angeles | 11.9 | 75.3 | 12.8 | 20.1 | 65.9 | 2.3 | 0.3 | 7.1 | 4.4 |
| 6059063500 | 11.33 | 15.76 | 15-20% | 5775 | Orange | 4 | 83.1 | 12.9 | 8.5 | 84.6 | 0.8 | 0.2 | 3.8 | 2.1 |
| 6075020700 | 11.31 | 15.75 | 15-20% | 5171 | San Francisco | 6.8 | 84.9 | 8.3 | 18.2 | 64.9 | 1.9 | 0.2 | 10.8 | 4 |
| 6085508404 | 11.31 | 15.74 | 15-20% | 6023 | Santa Clara | 15.3 | 70.7 | 14 | 8.2 | 48.6 | 1.8 | 0.1 | 36.8 | 4.5 |
| 6075013400 | 11.29 | 15.73 | 15-20% | 3599 | San Francisco | 8.5 | 79.8 | 11.7 | 5.1 | 79.4 | 1.5 | 0.1 | 10.3 | 3.6 |
| 6093000800 | 11.28 | 15.71 | 15-20% | 3412 | Siskiyou | 10.4 | 69.1 | 20.5 | 5.3 | 81.7 | 0.3 | 5.9 | 0.7 | 6 |
| 6073001900 | 11.27 | 15.70 | 15-20% | 2939 | San Diego | 7.4 | 80.5 | 12.1 | 16.6 | 74.1 | 2.9 | 0.3 | 3.3 | 2.7 |
| 6097153703 | 11.27 | 15.69 | 15-20% | 3490 | Sonoma | 5.8 | 78.6 | 15.6 | 7.7 | 85.8 | 0.4 | 0.8 | 1.4 | 4 |
| 6061021109 | 11.26 | 15.68 | 15-20% | 5012 | Placer | 12.8 | 74 | 13.2 | 8.3 | 78.3 | 1.7 | 0.5 | 7.8 | 3.4 |
| 6073013601 | 11.25 | 15.66 | 15-20% | 5053 | San Diego | 11.2 | 72.5 | 16.3 | 20.8 | 63.2 | 7.4 | 0.4 | 3.8 | 4.4 |
| 6073009103 | 11.25 | 15.65 | 15-20% | 3679 | San Diego | 9.5 | 71.8 | 18.7 | 11.7 | 78.6 | 1.4 | 0.1 | 4.9 | 3.4 |
| 6059099244 | 11.25 | 15.64 | 15-20% | 3730 | Orange | 7 | 51.8 | 41.2 | 7.3 | 82.9 | 0.6 | 0.2 | 6.7 | 2.2 |
| 6085506701 | 11.24 | 15.63 | 15-20% | 3954 | Santa Clara | 13.4 | 75.7 | 10.9 | 12.1 | 58.9 | 2.1 | 0.2 | 22.8 | 4 |
| 6079010503 | 11.23 | 15.61 | 15-20% | 5339 | San Luis Obispo | 9.5 | 69.2 | 21.3 | 15.7 | 78.9 | 0.4 | 0.4 | 2.2 | 2.4 |
| 6085507807 | 11.23 | 15.60 | 15-20% | 3219 | Santa Clara | 11.9 | 78.7 | 9.4 | 2.1 | 18.6 | 0.2 | 0.3 | 76 | 2.8 |
| 6085506101 | 11.23 | 15.59 | 15-20% | 4615 | Santa Clara | 12.8 | 71 | 16.2 | 14.5 | 52.5 | 1.6 | 0.2 | 27 | 4.1 |
| 6055200706 | 11.23 | 15.58 | 15-20% | 3283 | Napa | 10.8 | 75.8 | 13.4 | 22.1 | 70.7 | 0.8 | 0.7 | 3.2 | 2.6 |
| 6073020024 | 11.22 | 15.56 | 15-20% | 4175 | San Diego | 9.3 | 70.5 | 20.2 | 36.4 | 55.4 | 1.6 | 0.4 | 4.6 | 1.7 |
| 6075035202 | 11.22 | 15.55 | 15-20% | 4322 | San Francisco | 7.5 | 81.8 | 10.7 | 8.8 | 43.6 | 1.7 | 0.3 | 42.2 | 3.4 |
| 6073018802 | 11.22 | 15.54 | 15-20% | 8122 | San Diego | 7.1 | 66.7 | 26.2 | 12.6 | 81.4 | 0.7 | 0.3 | 3 | 2 |
| 6055201700 | 11.21 | 15.53 | 15-20% | 5373 | Napa | 7.2 | 79.2 | 13.6 | 17.8 | 68 | 2.9 | 0.4 | 7.5 | 3.4 |
| 6059021921 | 11.20 | 15.51 | 15-20% | 4496 | Orange | 9.9 | 79.8 | 10.3 | 11.7 | 62.5 | 1.3 | 0.2 | 21.2 | 3 |
| 6075047702 | 11.20 | 15.50 | 15-20% | 3824 | San Francisco | 8.7 | 74.1 | 17.2 | 4.8 | 38.2 | 1.6 | 0.2 | 51.4 | 3.7 |
| 6037194300 | 11.20 | 15.49 | 15-20% | 3029 | Los Angeles | 9.2 | 74.5 | 16.3 | 5.3 | 85.9 | 2.1 | 0.1 | 3.9 | 2.7 |
| 6059052526 | 11.20 | 15.47 | 15-20% | 4355 | Orange | 10 | 79.4 | 10.6 | 13.5 | 42.8 | 1.7 | 0.2 | 37.9 | 4 |
| 6085512031 | 11.16 | 15.46 | 15-20% | 4406 | Santa Clara | 14.3 | 76.7 | 9 | 26.2 | 52.5 | 2 | 0.6 | 14.3 | 4.5 |
| 6037137302 | 11.16 | 15.45 | 15-20% | 4338 | Los Angeles | 9.5 | 66.2 | 24.3 | 7.7 | 78.5 | 1.8 | 0 | 7.8 | 4.1 |
| 6041106002 | 11.16 | 15.44 | 15-20% | 5625 | Marin | 10.3 | 71.5 | 18.2 | 20.3 | 66.5 | 2.6 | 0.3 | 7.2 | 3.1 |
| 6037620800 | 11.16 | 15.42 | 15-20% | 7575 | Los Angeles | 12.2 | 74.7 | 13.1 | 8 | 69.7 | 1.1 | 0.2 | 15.6 | 5.5 |
| 6065043265 | 11.16 | 15.41 | 15-20% | 6142 | Riverside | 19.8 | 75 | 5.2 | 19.8 | 64.9 | 2.2 | 0.6 | 8.1 | 4.5 |
| 6067008125 | 11.15 | 15.40 | 15-20% | 5265 | Sacramento | 11 | 72 | 17 | 12.7 | 79.5 | 1.3 | 0.5 | 2.9 | 3 |
| 6083000200 | 11.12 | 15.39 | 15-20% | 4299 | Santa Barbara | 8.7 | 66.2 | 25.1 | 22.1 | 69.8 | 1.2 | 0.2 | 4 | 2.7 |
| 6037620522 | 11.11 | 15.37 | 15-20% | 4632 | Los Angeles | 13.9 | 77.7 | 8.4 | 15.9 | 60.6 | 3 | 0.3 | 15.2 | 5.1 |
| 6045011400 | 11.09 | 15.36 | 15-20% | 4469 | Mendocino | 8.9 | 71.5 | 19.6 | 13.8 | 78.3 | 0.8 | 1.7 | 2.7 | 2.8 |
| 6037650501 | 11.09 | 15.35 | 15-20% | 3063 | Los Angeles | 10.7 | 75.1 | 14.2 | 13.2 | 57.9 | 0.8 | 0.3 | 24.4 | 3.5 |
| 6073013411 | 11.09 | 15.34 | 15-20% | 4999 | San Diego | 9.3 | 72.5 | 18.2 | 40.6 | 40.8 | 2.4 | 0.2 | 13.2 | 2.8 |
| 6085508304 | 11.08 | 15.32 | 15-20% | 7957 | Santa Clara | 13.7 | 77.2 | 9.1 | 12.3 | 32.2 | 2.7 | 0.1 | 49.1 | 3.6 |
| 6013355110 | 11.08 | 15.31 | 15-20% | 4197 | Contra Costa | 13.2 | 81.7 | 5.1 | 25.4 | 31 | 22.2 | 0.4 | 15.4 | 5.5 |
| 6081611000 | 11.08 | 15.30 | 15-20% | 5707 | San Mateo | 13.1 | 75.2 | 11.7 | 33.5 | 52.8 | 1.5 | 0.2 | 8.2 | 3.8 |
| 6073009202 | 11.07 | 15.29 | 15-20% | 4428 | San Diego | 10.4 | 75.9 | 13.7 | 15.6 | 63.3 | 4.3 | 0.4 | 12.4 | 4.1 |
| 6067004011 | 11.06 | 15.27 | 15-20% | 3086 | Sacramento | 9.6 | 76.7 | 13.7 | 10.1 | 32.1 | 11.2 | 0.1 | 40.7 | 5.8 |
| 6085502500 | 11.05 | 15.26 | 15-20% | 6187 | Santa Clara | 14.8 | 71.8 | 13.4 | 17.6 | 70.7 | 1.3 | 0.3 | 6.5 | 3.7 |
| 6059032035 | 11.05 | 15.25 | 15-20% | 2373 | Orange | 7.3 | 71.9 | 20.8 | 8.9 | 80.4 | 1.1 | 0.1 | 6 | 3.4 |
| 6065043257 | 11.04 | 15.24 | 15-20% | 7034 | Riverside | 17.2 | 74.2 | 8.6 | 19.1 | 56.1 | 3.6 | 3.8 | 12.9 | 4.6 |
| 6037800324 | 11.04 | 15.22 | 15-20% | 6664 | Los Angeles | 11.9 | 76.9 | 11.2 | 7.6 | 79.3 | 1.4 | 0.2 | 8.8 | 2.8 |
| 6037570002 | 11.03 | 15.21 | 15-20% | 2699 | Los Angeles | 13.2 | 77.1 | 9.7 | 30.3 | 48.6 | 5.4 | 0.5 | 10.6 | 4.6 |
| 6013307101 | 11.03 | 15.20 | 15-20% | 4166 | Contra Costa | 11.7 | 73.6 | 14.7 | 28.2 | 52.6 | 9.8 | 0.5 | 5.9 | 3.1 |
| 6059062636 | 11.01 | 15.18 | 15-20% | 3690 | Orange | 14.3 | 80.7 | 5 | 17.5 | 57.5 | 2.8 | 0.2 | 16.4 | 5.7 |
| 6073017034 | 11.00 | 15.17 | 15-20% | 4747 | San Diego | 13.5 | 79 | 7.5 | 13 | 60 | 3.1 | 0.4 | 18.7 | 4.9 |
| 6073021205 | 11.00 | 15.16 | 15-20% | 6801 | San Diego | 13.4 | 74.2 | 12.4 | 17.7 | 74.3 | 1.4 | 1.4 | 2.6 | 2.6 |
| 6037800325 | 10.97 | 15.15 | 15-20% | 3407 | Los Angeles | 7.8 | 64 | 28.2 | 6.2 | 86.3 | 1.3 | 0.2 | 3.7 | 2.3 |

| | | | | | | | | | | | | | | |
|---|---|---|---|---|---|---|---|---|---|---|---|---|---|---|
| 6007000401 | 10.97 | 15.13 | 15-20% | 1771 | Butte | 16.8 | 76 | 7.2 | 19.9 | 71 | 1.7 | 1.4 | 3 | 3 |
| 6073017037 | 10.96 | 15.12 | 15-20% | 5880 | San Diego | 11.7 | 79.9 | 8.4 | 11 | 53.9 | 2.3 | 0.1 | 27.5 | 5.2 |
| 6089011803 | 10.96 | 15.11 | 15-20% | 2923 | Shasta | 8.1 | 71.9 | 20 | 6.6 | 86.3 | 0.4 | 3.1 | 0.5 | 3.1 |
| 6013338102 | 10.96 | 15.10 | 15-20% | 3601 | Contra Costa | 12 | 72.6 | 15.4 | 15.9 | 65.2 | 1.5 | 0.3 | 11.8 | 5.3 |
| 6037577400 | 10.95 | 15.08 | 15-20% | 3253 | Los Angeles | 7.9 | 80.4 | 11.7 | 13.9 | 76.4 | 1.9 | 0.2 | 4.9 | 2.8 |
| 6079011102 | 10.95 | 15.07 | 15-20% | 5127 | San Luis Obispo | 7.6 | 83.2 | 9.2 | 15.7 | 76.8 | 0.9 | 0.5 | 3.3 | 2.7 |
| 6075015600 | 10.94 | 15.06 | 15-20% | 2728 | San Francisco | 8.1 | 79.9 | 12 | 7.1 | 54.9 | 2.2 | 0.1 | 30 | 5.7 |
| 6001443322 | 10.94 | 15.05 | 15-20% | 2985 | Alameda | 16.1 | 73.5 | 10.4 | 8.1 | 27.6 | 1.5 | 0.4 | 58.3 | 4.1 |
| 6075010400 | 10.94 | 15.03 | 15-20% | 4545 | San Francisco | 5.4 | 79.2 | 15.4 | 5.3 | 63 | 1 | 0 | 27.9 | 2.8 |
| 6001400400 | 10.91 | 15.02 | 15-20% | 3703 | Alameda | 11.4 | 79.1 | 9.5 | 9 | 65.5 | 12.1 | 0.1 | 7.5 | 5.9 |
| 6097150202 | 10.91 | 15.01 | 15-20% | 5103 | Sonoma | 9.3 | 68 | 22.7 | 17.3 | 77.2 | 0.5 | 0.5 | 2.6 | 1.9 |
| 6073017014 | 10.91 | 15.00 | 10-15% | 2416 | San Diego | 0.4 | 26.1 | 73.5 | 4.6 | 87.9 | 1.1 | 0.2 | 5.3 | 0.8 |
| 6017031301 | 10.91 | 14.98 | 10-15% | 3408 | El Dorado | 9.4 | 68.7 | 21.9 | 10.4 | 85.3 | 0.2 | 0.7 | 1 | 2.4 |
| 6071002021 | 10.89 | 14.97 | 10-15% | 5201 | San Bernardino | 11.4 | 81.4 | 7.2 | 27 | 50.8 | 7.7 | 0.2 | 11 | 3.3 |
| 6073008345 | 10.88 | 14.96 | 10-15% | 3254 | San Diego | 7.9 | 65.1 | 27 | 10.3 | 73.6 | 1.6 | 0.1 | 11.7 | 2.6 |
| 6073017039 | 10.88 | 14.95 | 10-15% | 6921 | San Diego | 14.7 | 76.4 | 8.9 | 9.1 | 54.9 | 1.7 | 0.1 | 30.1 | 4.1 |
| 6097151700 | 10.88 | 14.93 | 10-15% | 6978 | Sonoma | 11.3 | 69.5 | 19.2 | 18 | 71.5 | 1.8 | 0.8 | 4.3 | 3.5 |
| 6073013905 | 10.86 | 14.92 | 10-15% | 3676 | San Diego | 13.4 | 78.4 | 8.2 | 31.8 | 39.1 | 15.4 | 0.1 | 8.7 | 4.9 |
| 6055201300 | 10.85 | 14.91 | 10-15% | 2933 | Napa | 4.5 | 46.8 | 48.7 | 9.9 | 84 | 1.2 | 0.6 | 1.6 | 2.6 |
| 6001423601 | 10.81 | 14.89 | 10-15% | 2642 | Alameda | 7 | 81.2 | 11.8 | 7.7 | 69.3 | 3.2 | 0.2 | 14.5 | 5 |
| 6059075814 | 10.81 | 14.88 | 10-15% | 3327 | Orange | 9.3 | 80.6 | 10.1 | 10.2 | 59.5 | 0.8 | 0.2 | 26.8 | 2.6 |
| 6085509302 | 10.80 | 14.87 | 10-15% | 2978 | Santa Clara | 14.6 | 68.7 | 16.7 | 13 | 59.4 | 2 | 0.3 | 20.7 | 4.5 |
| 6037920303 | 10.79 | 14.86 | 10-15% | 1446 | Los Angeles | 11 | 82 | 7 | 16.9 | 55.5 | 3.9 | 0.5 | 18.9 | 4.3 |
| 6059099404 | 10.79 | 14.84 | 10-15% | 4505 | Orange | 11 | 73.4 | 15.6 | 10.5 | 75.3 | 1.2 | 0.4 | 8.4 | 4.2 |
| 6073017603 | 10.79 | 14.83 | 10-15% | 2476 | San Diego | 10.4 | 78.5 | 11.1 | 22.1 | 72.1 | 0.5 | 0.3 | 2.4 | 2.6 |
| 6075032801 | 10.78 | 14.82 | 10-15% | 4238 | San Francisco | 7.6 | 73.2 | 19.2 | 5.9 | 30.1 | 0.9 | 0.1 | 60.4 | 2.7 |
| 6073017009 | 10.78 | 14.81 | 10-15% | 4024 | San Diego | 11.9 | 77.6 | 10.5 | 20.3 | 66.8 | 1.3 | 0.4 | 8 | 3.3 |
| 6067007904 | 10.78 | 14.79 | 10-15% | 4797 | Sacramento | 11.5 | 72.3 | 16.2 | 10.5 | 79.7 | 1.5 | 0.6 | 3.3 | 4.4 |
| 6095253201 | 10.78 | 14.78 | 10-15% | 4713 | Solano | 9.8 | 72.9 | 17.3 | 12.3 | 79.4 | 2.2 | 0.3 | 2 | 3.7 |
| 6059021816 | 10.78 | 14.77 | 10-15% | 4833 | Orange | 10.9 | 72.7 | 16.4 | 15.4 | 74 | 0.8 | 0.2 | 7.2 | 2.4 |
| 6073013605 | 10.77 | 14.76 | 10-15% | 5622 | San Diego | 10.3 | 73.7 | 16 | 14.2 | 75.8 | 2.6 | 0.5 | 3.8 | 3.1 |
| 6073009502 | 10.77 | 14.74 | 10-15% | 3659 | San Diego | 11.8 | 72.2 | 16 | 13 | 62.8 | 4.5 | 0.3 | 14.3 | 5.1 |
| 6073016612 | 10.76 | 14.73 | 10-15% | 6143 | San Diego | 10.9 | 79.7 | 9.4 | 13.9 | 76.9 | 1.3 | 0.8 | 3.3 | 3.8 |
| 6067007432 | 10.75 | 14.72 | 10-15% | 5040 | Sacramento | 17.7 | 78.3 | 4 | 15.2 | 62.3 | 7.1 | 0.8 | 10.3 | 4.3 |
| 6081605000 | 10.74 | 14.71 | 10-15% | 7603 | San Mateo | 12.7 | 66.2 | 21.1 | 8.3 | 52.7 | 0.7 | 0 | 35 | 3.2 |
| 6073017702 | 10.73 | 14.69 | 10-15% | 2777 | San Diego | 9.6 | 80.2 | 10.2 | 11.2 | 83.9 | 0.1 | 0.3 | 1.9 | 2.7 |
| 6073008364 | 10.73 | 14.68 | 10-15% | 4992 | San Diego | 6 | 86.8 | 7.2 | 11.5 | 54.4 | 1.4 | 0.2 | 28.2 | 4.3 |
| 6041109001 | 10.73 | 14.67 | 10-15% | 3853 | Marin | 11 | 76.2 | 12.8 | 31.1 | 58.7 | 2 | 0.2 | 4.6 | 3.5 |
| 6087122100 | 10.73 | 14.66 | 10-15% | 3267 | Santa Cruz | 9.8 | 77.4 | 12.8 | 14.8 | 77.7 | 0.7 | 0.7 | 2.7 | 3.4 |
| 6067007104 | 10.72 | 14.64 | 10-15% | 7689 | Sacramento | 19.7 | 76.6 | 3.7 | 18.5 | 36.4 | 13.3 | 0.4 | 25.5 | 6 |
| 6073016809 | 10.69 | 14.63 | 10-15% | 5486 | San Diego | 14 | 75.4 | 10.6 | 19.5 | 71.8 | 1.8 | 0.9 | 2.8 | 3.1 |
| 6089012601 | 10.69 | 14.62 | 10-15% | 5195 | Shasta | 8.2 | 74.4 | 17.4 | 5.8 | 85.9 | 0.9 | 3.3 | 0.7 | 3.4 |
| 6087122201 | 10.68 | 14.60 | 10-15% | 6269 | Santa Cruz | 10.7 | 72.2 | 17.1 | 12.7 | 81.4 | 0.4 | 0.4 | 2.4 | 2.7 |
| 6073017043 | 10.67 | 14.59 | 10-15% | 5535 | San Diego | 16.4 | 78.2 | 5.4 | 9.7 | 48 | 3.2 | 0.2 | 33.4 | 5.5 |
| 6001430101 | 10.67 | 14.58 | 10-15% | 6523 | Alameda | 13 | 77.2 | 9.8 | 8 | 36.6 | 4.1 | 0.1 | 47 | 4.3 |
| 6075035201 | 10.67 | 14.57 | 10-15% | 5300 | San Francisco | 8.1 | 77.2 | 14.7 | 5.5 | 32.8 | 2.6 | 0.2 | 54.7 | 4.2 |
| 6037430600 | 10.66 | 14.55 | 10-15% | 4505 | Los Angeles | 9.4 | 71.2 | 19.4 | 9.9 | 38.7 | 0.9 | 0.1 | 47.9 | 2.4 |
| 6075013500 | 10.66 | 14.54 | 10-15% | 2556 | San Francisco | 6.3 | 79.7 | 14 | 6.4 | 73.7 | 2.5 | 0.1 | 14.1 | 3.2 |
| 6037574100 | 10.66 | 14.53 | 10-15% | 5098 | Los Angeles | 12.3 | 74.4 | 13.3 | 18.2 | 68.3 | 1.9 | 0.2 | 7.3 | 4.1 |
| 6065043267 | 10.65 | 14.52 | 10-15% | 6705 | Riverside | 12.8 | 69.9 | 17.3 | 15.2 | 72.3 | 2.5 | 0.4 | 6.4 | 3.2 |
| 6037920119 | 10.65 | 14.50 | 10-15% | 1896 | Los Angeles | 17.4 | 78.5 | 4.1 | 21.7 | 54.2 | 4.7 | 0.2 | 15 | 4.3 |
| 6079012502 | 10.63 | 14.49 | 10-15% | 4985 | San Luis Obispo | 14 | 78.5 | 7.5 | 18.6 | 74.8 | 1 | 0.7 | 1.7 | 3.2 |
| 6037271500 | 10.62 | 14.48 | 10-15% | 2937 | Los Angeles | 11.6 | 68.7 | 19.7 | 11.2 | 67.1 | 1.8 | 0.2 | 15.4 | 4.3 |
| 6015000104 | 10.61 | 14.47 | 10-15% | 1881 | Del Norte | 15.2 | 70.2 | 14.6 | 23.7 | 63.5 | 0.4 | 6.3 | 2.8 | 3.3 |
| 6075026002 | 10.61 | 14.45 | 10-15% | 3544 | San Francisco | 8.4 | 68.2 | 23.4 | 33.5 | 26.2 | 3.8 | 0.2 | 34 | 2.3 |
| 6001451703 | 10.60 | 14.44 | 10-15% | 3859 | Alameda | 13.6 | 75.5 | 10.9 | 14.1 | 69.4 | 1.7 | 0.2 | 10.9 | 3.7 |
| 6073017813 | 10.58 | 14.43 | 10-15% | 4106 | San Diego | 12.2 | 65.4 | 22.4 | 7.9 | 82.9 | 0.6 | 0.3 | 5.6 | 2.7 |
| 6061022800 | 10.55 | 14.42 | 10-15% | 4320 | Placer | 20.2 | 74.3 | 5.5 | 13.5 | 64.3 | 1.4 | 0.3 | 16.6 | 3.9 |
| 6065044929 | 10.55 | 14.40 | 10-15% | 3908 | Riverside | 5.9 | 53.4 | 40.7 | 16.2 | 75.8 | 1.6 | 0.3 | 4.7 | 1.4 |
| 6017030810 | 10.55 | 14.39 | 10-15% | 3437 | El Dorado | 14.3 | 72.2 | 13.5 | 15.2 | 77.8 | 0.6 | 0.9 | 2.2 | 3.3 |
| 6071000816 | 10.55 | 14.38 | 10-15% | 3906 | San Bernardino | 8 | 70.8 | 21.2 | 25 | 62.3 | 4.2 | 0.2 | 6 | 2.3 |
| 6037300702 | 10.54 | 14.36 | 10-15% | 5604 | Los Angeles | 9.9 | 68.8 | 21.3 | 6.5 | 79.7 | 0.7 | 0 | 10.6 | 2.5 |
| 6059075808 | 10.54 | 14.35 | 10-15% | 3404 | Orange | 10.6 | 71.4 | 18 | 23.6 | 67.4 | 0.9 | 0.3 | 5.2 | 2.7 |
| 6073008354 | 10.54 | 14.34 | 10-15% | 5972 | San Diego | 15.7 | 78.3 | 6 | 10.1 | 33.9 | 3.8 | 0.1 | 47.1 | 4.9 |
| 6087122400 | 10.53 | 14.33 | 10-15% | 7167 | Santa Cruz | 9.6 | 75.5 | 14.9 | 21.3 | 73.2 | 0.6 | 0.3 | 2.3 | 2.3 |
| 6081606800 | 10.53 | 14.31 | 10-15% | 3234 | San Mateo | 12.6 | 69 | 18.4 | 7 | 58.1 | 0.7 | 0 | 29.8 | 4.4 |

| | | | | | | | | | | | | | | |
|---|---|---|---|---|---|---|---|---|---|---|---|---|---|---|
| 6075012700 | 10.53 | 14.30 | 10-15% | 3492 | San Francisco | 8.8 | 79.1 | 12.1 | 5.4 | 81.3 | 0.4 | 0.1 | 9.7 | 3.1 |
| 6059052506 | 10.53 | 14.29 | 10-15% | 2490 | Orange | 9.1 | 75 | 15.9 | 8.6 | 62.9 | 1.6 | 0 | 23.6 | 3.3 |
| 6059021824 | 10.52 | 14.28 | 10-15% | 2678 | Orange | 9.5 | 82.2 | 8.3 | 12.1 | 71.4 | 0.9 | 0.3 | 13.2 | 2.1 |
| 6067004008 | 10.51 | 14.26 | 10-15% | 3596 | Sacramento | 10.3 | 77 | 12.7 | 17.8 | 40.4 | 8.8 | 0.2 | 27.3 | 5.6 |
| 6073001000 | 10.51 | 14.25 | 10-15% | 4733 | San Diego | 7.2 | 86.8 | 6 | 26 | 56.7 | 7.1 | 0.3 | 5.7 | 4.3 |
| 6081613502 | 10.51 | 14.24 | 10-15% | 5975 | San Mateo | 12.4 | 77 | 10.6 | 14.8 | 77.1 | 0.7 | 0.3 | 3.4 | 3.5 |
| 6111007300 | 10.50 | 14.23 | 10-15% | 1930 | Ventura | 9.4 | 75 | 15.6 | 9.8 | 82.1 | 1 | 0.2 | 4.2 | 2.7 |
| 6085503322 | 10.49 | 14.21 | 10-15% | 4173 | Santa Clara | 13.1 | 75.7 | 11.2 | 38.6 | 15.2 | 5.5 | 0.3 | 39.1 | 1.3 |
| 6037800331 | 10.49 | 14.20 | 10-15% | 766 | Los Angeles | 10.3 | 78.7 | 11 | 10.2 | 72.2 | 3 | 0 | 10.1 | 4.6 |
| 6111007202 | 10.49 | 14.19 | 10-15% | 4313 | Ventura | 9.3 | 71.3 | 19.4 | 8.8 | 80.5 | 0.8 | 0.2 | 6.8 | 2.9 |
| 6059099511 | 10.48 | 14.18 | 10-15% | 3182 | Orange | 6.6 | 81.4 | 12 | 10.3 | 81.4 | 0.4 | 0.2 | 4.9 | 2.7 |
| 6065044918 | 10.47 | 14.16 | 10-15% | 3030 | Riverside | 4.2 | 43.7 | 52.1 | 4.6 | 88.9 | 0.7 | 0.3 | 3.8 | 1.7 |
| 6019006405 | 10.47 | 14.15 | 10-15% | 4795 | Fresno | 10.2 | 71.2 | 18.6 | 12.1 | 80.2 | 0.3 | 2.2 | 1.6 | 3.6 |
| 6037480201 | 10.47 | 14.14 | 10-15% | 3907 | Los Angeles | 12.5 | 69.9 | 17.6 | 24.2 | 38.9 | 1.1 | 0.2 | 32.9 | 2.7 |
| 6037480500 | 10.46 | 14.13 | 10-15% | 5485 | Los Angeles | 11.2 | 76 | 12.8 | 15.9 | 54.2 | 1.7 | 0.1 | 24.3 | 3.9 |
| 6041104101 | 10.45 | 14.11 | 10-15% | 7819 | Marin | 13.8 | 70.3 | 15.9 | 19 | 68.5 | 1.7 | 0.1 | 6.8 | 4 |
| 6059062641 | 10.45 | 14.10 | 10-15% | 4249 | Orange | 11.9 | 61.2 | 26.9 | 35 | 51.1 | 1.1 | 0.1 | 10 | 2.7 |
| 6067009637 | 10.43 | 14.09 | 10-15% | 6003 | Sacramento | 19.5 | 75.1 | 5.4 | 15.5 | 21.8 | 15.5 | 0 | 40.9 | 6.1 |
| 6083002913 | 10.43 | 14.07 | 10-15% | 3596 | Santa Barbara | 9.1 | 61.4 | 29.5 | 14.1 | 77.3 | 0.7 | 0.2 | 5.5 | 2.2 |
| 6081603000 | 10.43 | 14.06 | 10-15% | 4143 | San Mateo | 9.4 | 80.6 | 10 | 17.4 | 65.1 | 1.7 | 0.5 | 9.9 | 5.3 |
| 6037194102 | 10.43 | 14.05 | 10-15% | 3458 | Los Angeles | 8.8 | 74.6 | 16.6 | 5.1 | 82.1 | 3.2 | 0.1 | 6.6 | 3 |
| 6023000600 | 10.42 | 14.04 | 10-15% | 4866 | Humboldt | 11.2 | 73.5 | 15.3 | 9.7 | 78.6 | 1.1 | 2.5 | 3.6 | 4.4 |
| 6085507205 | 10.42 | 14.02 | 10-15% | 4475 | Santa Clara | 10.6 | 67.5 | 21.9 | 6.6 | 77.5 | 0.4 | 0.1 | 11.6 | 3.9 |
| 6023010502 | 10.41 | 14.01 | 10-15% | 5281 | Humboldt | 11.7 | 74.5 | 13.8 | 6.2 | 84.5 | 0.4 | 3.5 | 1.6 | 3.7 |
| 6073019203 | 10.40 | 14.00 | 10-15% | 2866 | San Diego | 12.6 | 72.5 | 14.9 | 29.2 | 61.4 | 2.1 | 0.4 | 3.6 | 3.2 |
| 6067007102 | 10.40 | 13.99 | 10-15% | 7195 | Sacramento | 14 | 67.6 | 18.4 | 15.1 | 41.6 | 10.7 | 0.3 | 27.2 | 5 |
| 6071010402 | 10.40 | 13.97 | 10-15% | 8442 | San Bernardino | 19.7 | 80.1 | 0.2 | 22 | 63.3 | 6.4 | 1.1 | 3.4 | 3.6 |
| 6037701304 | 10.40 | 13.96 | 10-15% | 6374 | Los Angeles | 9.2 | 70.4 | 20.4 | 5.9 | 81.8 | 1.3 | 0.1 | 7.3 | 3.7 |
| 6081613600 | 10.39 | 13.95 | 10-15% | 6018 | San Mateo | 11.4 | 76.7 | 11.9 | 20.5 | 70.9 | 0.6 | 0.2 | 4.4 | 3.4 |
| 6111000901 | 10.39 | 13.94 | 10-15% | 2541 | Ventura | 8.1 | 65.3 | 26.6 | 9.6 | 86.4 | 0.4 | 0.2 | 1.6 | 1.8 |
| 6059052522 | 10.38 | 13.92 | 10-15% | 4123 | Orange | 12.2 | 80.5 | 7.3 | 8.2 | 38.2 | 2 | 0.1 | 46.7 | 4.8 |
| 6015000101 | 10.38 | 13.91 | 10-15% | 3939 | Del Norte | 15.1 | 73.3 | 11.6 | 11.7 | 68.5 | 0.9 | 6.3 | 8.9 | 3.8 |
| 6057000300 | 10.37 | 13.90 | 10-15% | 2353 | Nevada | 7.4 | 70.8 | 21.8 | 4.9 | 89.6 | 0.5 | 0.9 | 0.9 | 3.2 |
| 6075032901 | 10.37 | 13.89 | 10-15% | 5021 | San Francisco | 8.2 | 74.2 | 17.6 | 5 | 29 | 0.9 | 0.3 | 62.5 | 2.5 |
| 6081608100 | 10.35 | 13.87 | 10-15% | 3523 | San Mateo | 15.2 | 71.1 | 13.7 | 7.3 | 39.8 | 1.9 | 0 | 45.9 | 5.1 |
| 6085502702 | 10.33 | 13.86 | 10-15% | 8042 | Santa Clara | 13.7 | 73.5 | 12.8 | 13.8 | 60.6 | 1.9 | 0.3 | 18.7 | 4.7 |
| 6059032053 | 10.32 | 13.85 | 10-15% | 7976 | Orange | 13.4 | 80.6 | 6 | 17.1 | 67.4 | 2.1 | 0.2 | 9.2 | 4 |
| 6073013417 | 10.32 | 13.84 | 10-15% | 2087 | San Diego | 9.6 | 81.5 | 8.9 | 43.9 | 28.2 | 6.1 | 0.2 | 17.6 | 3.9 |
| 6075047901 | 10.32 | 13.82 | 10-15% | 6400 | San Francisco | 7.5 | 75.5 | 17 | 5.9 | 42.1 | 2.3 | 0.2 | 45.7 | 3.9 |
| 6073007501 | 10.30 | 13.81 | 10-15% | 4040 | San Diego | 5.4 | 90.7 | 3.9 | 12.7 | 79.5 | 1.7 | 0.5 | 2 | 3.7 |
| 6085508003 | 10.28 | 13.80 | 10-15% | 2222 | Santa Clara | 14.5 | 75.8 | 9.7 | 7.2 | 32.8 | 1.5 | 0.3 | 54.1 | 4.1 |
| 6063000400 | 10.27 | 13.78 | 10-15% | 2785 | Plumas | 9.2 | 70.9 | 19.9 | 9 | 78.8 | 0.1 | 7.4 | 0.6 | 4 |
| 6037573800 | 10.27 | 13.77 | 10-15% | 4284 | Los Angeles | 12.6 | 75.5 | 11.9 | 20.6 | 65.8 | 2.3 | 0.3 | 7 | 3.9 |
| 6037920109 | 10.26 | 13.76 | 10-15% | 4493 | Los Angeles | 14 | 72.1 | 13.9 | 14.8 | 65 | 3.8 | 0.3 | 12.8 | 3.2 |
| 6019006404 | 10.25 | 13.75 | 10-15% | 4909 | Fresno | 11.1 | 74.5 | 14.4 | 10.1 | 83.4 | 0.7 | 1.6 | 1.3 | 3 |
| 6029003810 | 10.24 | 13.73 | 10-15% | 2578 | Kern | 9.9 | 80.7 | 9.4 | 14.1 | 75.2 | 2.4 | 0.8 | 4.4 | 3.2 |
| 6041119201 | 10.23 | 13.72 | 10-15% | 3288 | Marin | 7.2 | 62.9 | 29.9 | 11.1 | 75.9 | 2.6 | 0.3 | 6.1 | 4.1 |
| 6113011002 | 10.22 | 13.71 | 10-15% | 3093 | Yolo | 9.7 | 67.1 | 23.2 | 19.9 | 74.5 | 0.5 | 0.7 | 2.5 | 1.9 |
| 6113010704 | 10.20 | 13.70 | 10-15% | 2267 | Yolo | 8.3 | 76.6 | 15.1 | 9 | 67.2 | 5 | 0.2 | 14.2 | 4.5 |
| 6061020715 | 10.19 | 13.68 | 10-15% | 3059 | Placer | 10.9 | 76.3 | 12.8 | 14.5 | 76.7 | 1.1 | 0.9 | 3 | 3.7 |
| 6079011503 | 10.19 | 13.67 | 10-15% | 3624 | San Luis Obispo | 11.3 | 78.2 | 10.5 | 8.9 | 83.2 | 0.8 | 0.1 | 4.2 | 2.7 |
| 6067008210 | 10.19 | 13.66 | 10-15% | 5472 | Sacramento | 8.4 | 65.9 | 25.7 | 6.4 | 83.8 | 1.3 | 0.3 | 5 | 3.2 |
| 6097151203 | 10.16 | 13.65 | 10-15% | 5130 | Sonoma | 11.8 | 80.1 | 8.1 | 18.5 | 72.5 | 1.3 | 0.5 | 3.6 | 3.6 |
| 6037135203 | 10.16 | 13.63 | 10-15% | 7055 | Los Angeles | 10.6 | 73 | 16.4 | 12 | 70.3 | 2 | 0.1 | 12 | 3.7 |
| 6067004009 | 10.15 | 13.62 | 10-15% | 5129 | Sacramento | 11 | 77.8 | 11.2 | 16.1 | 31.9 | 15.3 | 0.4 | 30.8 | 5.5 |
| 6097152502 | 10.15 | 13.61 | 10-15% | 3603 | Sonoma | 10.9 | 71.1 | 18 | 15.7 | 74.2 | 1.8 | 1 | 3.7 | 3.6 |
| 6065049700 | 10.13 | 13.60 | 10-15% | 9511 | Riverside | 14.3 | 78 | 7.7 | 18.4 | 70.8 | 2.6 | 0.5 | 4.6 | 3.1 |
| 6075047600 | 10.11 | 13.58 | 10-15% | 5137 | San Francisco | 9.2 | 74.4 | 16.4 | 6.1 | 39.9 | 1.5 | 0.1 | 48.2 | 4.2 |
| 6049000400 | 10.11 | 13.57 | 10-15% | 1265 | Modoc | 9.6 | 66.9 | 23.5 | 11.7 | 79.6 | 0.2 | 6.2 | 0.2 | 2.1 |
| 6059042328 | 10.11 | 13.56 | 10-15% | 2524 | Orange | 10.3 | 75.2 | 14.5 | 5.9 | 78.8 | 0.7 | 0.3 | 9.7 | 4.6 |
| 6083002007 | 10.10 | 13.55 | 10-15% | 9554 | Santa Barbara | 13.6 | 70.8 | 15.6 | 31.5 | 55.3 | 2.2 | 0.5 | 7.6 | 2.9 |
| 6057000200 | 10.09 | 13.53 | 10-15% | 2700 | Nevada | 8.4 | 73.2 | 18.4 | 5.6 | 89.6 | 0.3 | 1 | 0.7 | 2.7 |
| 6075013102 | 10.09 | 13.52 | 10-15% | 2625 | San Francisco | 5.3 | 78.7 | 16 | 5.1 | 76.5 | 1.2 | 0.2 | 13 | 4 |
| 6059042320 | 10.09 | 13.51 | 10-15% | 5665 | Orange | 13.3 | 80.4 | 6.3 | 26.3 | 56.6 | 2.7 | 0.2 | 11.1 | 3.1 |
| 6017030603 | 10.09 | 13.49 | 10-15% | 3566 | El Dorado | 9.1 | 74.1 | 16.8 | 6.9 | 87.9 | 0.2 | 1.4 | 0.7 | 2.8 |
| 6039000106 | 10.08 | 13.48 | 10-15% | 5021 | Madera | 11.3 | 69.6 | 19.1 | 10.4 | 82.2 | 0.7 | 2 | 1.1 | 3.5 |

| | | | | | | | | | | | | | | |
|---|---|---|---|---|---|---|---|---|---|---|---|---|---|---|
| 6081602900 | 10.08 | 13.47 | 10-15% | 3846 | San Mateo | 9.5 | 80.3 | 10.2 | 18.1 | 54.9 | 3 | 0.4 | 18.3 | 5.3 |
| 6023011500 | 10.08 | 13.46 | 10-15% | 4409 | Humboldt | 11.1 | 77.5 | 11.4 | 6.5 | 85.6 | 1.1 | 1.9 | 0.9 | 4.1 |
| 6037670416 | 10.07 | 13.44 | 10-15% | 4139 | Los Angeles | 9.3 | 67.6 | 23.1 | 5.9 | 50.2 | 2.7 | 0.1 | 36.1 | 5 |
| 6097153501 | 10.07 | 13.43 | 10-15% | 4319 | Sonoma | 7.7 | 74.5 | 17.8 | 10.9 | 83.3 | 0.8 | 0.3 | 1.8 | 2.9 |
| 6075013101 | 10.06 | 13.42 | 10-15% | 3811 | San Francisco | 4.5 | 84.6 | 10.9 | 6.7 | 72.5 | 1.9 | 0.1 | 15.5 | 3.4 |
| 6037910809 | 10.05 | 13.41 | 10-15% | 2235 | Los Angeles | 7.5 | 79 | 13.5 | 12 | 77.5 | 1.3 | 0.1 | 7 | 2.1 |
| 6001428301 | 10.05 | 13.39 | 10-15% | 6526 | Alameda | 12.5 | 72.5 | 15 | 8.2 | 38.8 | 3.4 | 0.2 | 42.9 | 6.5 |
| 6059099309 | 10.05 | 13.38 | 10-15% | 4547 | Orange | 8.2 | 70.1 | 21.7 | 10 | 79.5 | 0.4 | 0.2 | 7.1 | 2.7 |
| 6113010606 | 10.04 | 13.37 | 10-15% | 7902 | Yolo | 10.5 | 79.7 | 9.8 | 16 | 63.7 | 2.6 | 0.3 | 13.1 | 4.4 |
| 6037920110 | 10.04 | 13.36 | 10-15% | 5010 | Los Angeles | 15.9 | 80.5 | 3.6 | 12.1 | 66.7 | 2.6 | 0.1 | 15.3 | 3.3 |
| 6059052417 | 10.03 | 13.34 | 10-15% | 6771 | Orange | 10.9 | 71.1 | 18 | 7 | 50.3 | 1 | 0.1 | 37.1 | 4.6 |
| 6067008211 | 10.03 | 13.33 | 10-15% | 2871 | Sacramento | 8.8 | 74.2 | 17 | 7.9 | 84.8 | 0.7 | 0.5 | 2.4 | 3.7 |
| 6009000122 | 10.02 | 13.32 | 10-15% | 4046 | Calaveras | 8.5 | 67.6 | 23.9 | 9.9 | 85.2 | 1 | 1 | 0.7 | 2.2 |
| 6037194101 | 10.01 | 13.31 | 10-15% | 3091 | Los Angeles | 6 | 83.6 | 10.4 | 9.3 | 77.7 | 3.9 | 0.3 | 5.5 | 3.3 |
| 6055201900 | 10.00 | 13.29 | 10-15% | 1293 | Napa | 8 | 69.3 | 22.7 | 20.1 | 74.5 | 0.2 | 0.9 | 2.9 | 1.4 |
| 6059052528 | 10.00 | 13.28 | 10-15% | 3469 | Orange | 12.2 | 77 | 10.8 | 8.8 | 46.2 | 1.7 | 0.1 | 39.1 | 4.2 |
| 6073020027 | 10.00 | 13.27 | 10-15% | 13665 | San Diego | 19.6 | 67.1 | 13.3 | 14.3 | 69.3 | 1.7 | 0.3 | 10.2 | 4.3 |
| 6075032601 | 10.00 | 13.26 | 10-15% | 4416 | San Francisco | 7.3 | 79.1 | 13.6 | 6.6 | 35.6 | 1.5 | 0.2 | 52.1 | 4 |
| 6059052427 | 10.00 | 13.24 | 10-15% | 5119 | Orange | 15.4 | 81.2 | 3.4 | 13.5 | 59.5 | 1.2 | 0.4 | 20.8 | 4.7 |
| 6037621201 | 10.00 | 13.23 | 10-15% | 6452 | Los Angeles | 10 | 79.7 | 10.3 | 15.4 | 68.6 | 2.7 | 0.2 | 8.5 | 4.5 |
| 6085507702 | 9.99 | 13.22 | 10-15% | 6126 | Santa Clara | 9.8 | 74.8 | 15.4 | 1.8 | 32.5 | 0.2 | 0 | 62.7 | 2.7 |
| 6095252910 | 9.99 | 13.20 | 10-15% | 5617 | Solano | 14.3 | 78.2 | 7.5 | 20.8 | 57.7 | 7 | 0.8 | 6.5 | 7.2 |
| 6059032039 | 9.99 | 13.19 | 10-15% | 6696 | Orange | 12.4 | 82.4 | 5.2 | 20.2 | 64.2 | 0.8 | 0.1 | 10.5 | 4.2 |
| 6075016500 | 9.98 | 13.18 | 10-15% | 5083 | San Francisco | 7.2 | 81.6 | 11.2 | 9.1 | 66.5 | 6.9 | 0.4 | 12.3 | 4.8 |
| 6065043264 | 9.97 | 13.17 | 10-15% | 7683 | Riverside | 16 | 77.7 | 6.3 | 22.9 | 60.5 | 3.5 | 0.4 | 8.1 | 4.6 |
| 6075013300 | 9.96 | 13.15 | 10-15% | 4232 | San Francisco | 11.9 | 65 | 23.1 | 4.6 | 80.9 | 1.3 | 0.2 | 10.3 | 2.7 |
| 6053013600 | 9.96 | 13.14 | 10-15% | 4396 | Monterey | 16.2 | 74 | 9.8 | 59.7 | 26.8 | 3 | 0.3 | 7.1 | 3.1 |
| 6095252311 | 9.96 | 13.13 | 10-15% | 4557 | Solano | 12.2 | 78.9 | 8.9 | 14.7 | 42.6 | 15.4 | 0.1 | 20.8 | 6.4 |
| 6029003305 | 9.96 | 13.12 | 10-15% | 3608 | Kern | 11.4 | 76.6 | 12 | 18.1 | 77.5 | 0.4 | 0.9 | 1 | 2.1 |
| 6037910302 | 9.96 | 13.10 | 10-15% | 6387 | Los Angeles | 11.1 | 78 | 10.9 | 23.4 | 59.4 | 7.7 | 0.7 | 5.3 | 3.5 |
| 6013334200 | 9.94 | 13.09 | 10-15% | 6794 | Contra Costa | 10.8 | 64.4 | 24.8 | 6.2 | 80.8 | 1.3 | 0.1 | 8.2 | 3.5 |
| 6081606700 | 9.92 | 13.08 | 10-15% | 2348 | San Mateo | 10.6 | 67.1 | 22.3 | 8.1 | 68.8 | 0.3 | 0 | 19.6 | 3.3 |
| 6065045214 | 9.92 | 13.07 | 10-15% | 5648 | Riverside | 10.2 | 68.8 | 21 | 21.6 | 71.7 | 1.6 | 0.2 | 2.9 | 1.9 |
| 6037141500 | 9.92 | 13.05 | 10-15% | 2984 | Los Angeles | 10.9 | 65.5 | 23.6 | 5.4 | 84.5 | 1.4 | 0 | 5.5 | 3.3 |
| 6067005804 | 9.91 | 13.04 | 10-15% | 2585 | Sacramento | 9.4 | 63.8 | 26.8 | 6 | 83.2 | 1 | 0.2 | 6.7 | 2.9 |
| 6111007610 | 9.90 | 13.03 | 10-15% | 5118 | Ventura | 13.3 | 78.6 | 8.1 | 16.8 | 72.5 | 1.3 | 0.3 | 5.6 | 3.4 |
| 6111005909 | 9.90 | 13.02 | 10-15% | 3395 | Ventura | 10 | 70.1 | 19.9 | 15.7 | 74 | 1 | 0.2 | 7 | 2.1 |
| 6037574901 | 9.90 | 13.00 | 10-15% | 3725 | Los Angeles | 13.3 | 75.3 | 11.4 | 15.4 | 70 | 1.7 | 0.2 | 8.4 | 4.2 |
| 6095252912 | 9.89 | 12.99 | 10-15% | 5625 | Solano | 11.6 | 80.2 | 8.2 | 13.5 | 65.3 | 6.8 | 0.3 | 8.3 | 5.8 |
| 6079010902 | 9.89 | 12.98 | 10-15% | 3874 | San Luis Obispo | 2.6 | 93.3 | 4.1 | 12.5 | 76.6 | 0.9 | 0.2 | 6.6 | 3.2 |
| 6085503324 | 9.88 | 12.97 | 10-15% | 3543 | Santa Clara | 11.4 | 78.9 | 9.7 | 17.4 | 8.1 | 2.5 | 0.1 | 69.7 | 2.2 |
| 6081603200 | 9.87 | 12.95 | 10-15% | 3828 | San Mateo | 11.5 | 77.1 | 11.4 | 14.4 | 70.9 | 0.9 | 0.5 | 7.3 | 5.9 |
| 6113010512 | 9.86 | 12.94 | 10-15% | 3406 | Yolo | 10.4 | 82 | 7.6 | 14.6 | 55.5 | 4.1 | 0.2 | 21.4 | 4.1 |
| 6085503313 | 9.86 | 12.93 | 10-15% | 4582 | Santa Clara | 11.9 | 78.1 | 10 | 24 | 19.6 | 3 | 0.2 | 50.6 | 2.7 |
| 6013304004 | 9.85 | 12.91 | 10-15% | 3738 | Contra Costa | 8.8 | 74.7 | 16.5 | 11.2 | 80.6 | 2 | 0.6 | 2.5 | 3 |
| 6013338201 | 9.85 | 12.90 | 10-15% | 3790 | Contra Costa | 11.5 | 65.3 | 23.2 | 10.4 | 70 | 1 | 0.3 | 14.1 | 4.2 |
| 6081600401 | 9.85 | 12.89 | 10-15% | 3240 | San Mateo | 10.2 | 77.4 | 12.4 | 24.6 | 13.9 | 5.7 | 0.1 | 51.3 | 4.4 |
| 6001435103 | 9.84 | 12.88 | 10-15% | 6403 | Alameda | 14.7 | 75.6 | 9.7 | 12.2 | 36.7 | 7.7 | 0.1 | 37.9 | 5.4 |
| 6079011504 | 9.84 | 12.86 | 10-15% | 1362 | San Luis Obispo | 3 | 88.9 | 8.1 | 25.6 | 67.4 | 3.2 | 0.7 | 0.9 | 2.1 |
| 6059021817 | 9.83 | 12.85 | 10-15% | 3479 | Orange | 11.4 | 78.1 | 10.5 | 16.6 | 69.7 | 1.3 | 0.1 | 9 | 3.4 |
| 6097152400 | 9.82 | 12.84 | 10-15% | 10001 | Sonoma | 8.8 | 68.3 | 22.9 | 6.7 | 82.3 | 0.8 | 0.3 | 7.1 | 2.8 |
| 6073000100 | 9.80 | 12.83 | 10-15% | 3029 | San Diego | 9.2 | 68.4 | 22.4 | 7.9 | 86.3 | 0.9 | 0.5 | 2.5 | 2 |
| 6073007400 | 9.79 | 12.81 | 10-15% | 6590 | San Diego | 8.9 | 82.7 | 8.4 | 12.4 | 78.8 | 1.4 | 0.4 | 3 | 4 |
| 6059062628 | 9.79 | 12.80 | 10-15% | 3581 | Orange | 7.9 | 85.8 | 6.3 | 7.1 | 50.1 | 1.7 | 0.1 | 36.8 | 4 |
| 6037920104 | 9.78 | 12.79 | 10-15% | 2798 | Los Angeles | 11.9 | 81.5 | 6.6 | 20.3 | 68.5 | 2.6 | 0.3 | 5.6 | 2.8 |
| 6037464100 | 9.78 | 12.78 | 10-15% | 7210 | Los Angeles | 12 | 70.1 | 17.9 | 7.8 | 44.2 | 0.6 | 0 | 44.5 | 2.9 |
| 6037460200 | 9.77 | 12.76 | 10-15% | 5315 | Los Angeles | 10.4 | 73.8 | 15.8 | 16.8 | 37.1 | 36 | 0.3 | 4.7 | 5.2 |
| 6073020401 | 9.77 | 12.75 | 10-15% | 2369 | San Diego | 7.4 | 69.7 | 22.9 | 7.5 | 86.6 | 0.5 | 0.2 | 3.6 | 1.6 |
| 6075032902 | 9.77 | 12.74 | 10-15% | 3831 | San Francisco | 8.7 | 73.3 | 18 | 4.9 | 25.2 | 0.9 | 0 | 67.1 | 2 |
| 6097151502 | 9.77 | 12.73 | 10-15% | 6591 | Sonoma | 10.2 | 72.9 | 16.9 | 13.2 | 77.6 | 1.4 | 0.6 | 4 | 3.2 |
| 6059032029 | 9.75 | 12.71 | 10-15% | 4328 | Orange | 13 | 80.9 | 6.1 | 22.8 | 60.9 | 1.1 | 0.2 | 11.2 | 3.8 |
| 6059099243 | 9.75 | 12.70 | 10-15% | 4287 | Orange | 9.2 | 79.2 | 11.6 | 10.7 | 74.6 | 0.7 | 0.2 | 10.8 | 2.9 |
| 6001450701 | 9.75 | 12.69 | 10-15% | 8075 | Alameda | 11.8 | 79.6 | 8.6 | 6.6 | 67.9 | 1.2 | 0.1 | 20.3 | 3.9 |
| 6059075702 | 9.74 | 12.67 | 10-15% | 3343 | Orange | 10.6 | 69.4 | 20 | 19.3 | 71 | 0.5 | 0.1 | 7.1 | 2 |
| 6061020711 | 9.73 | 12.66 | 10-15% | 4372 | Placer | 11.9 | 74.8 | 13.3 | 12 | 73.5 | 2 | 0.5 | 8.2 | 3.8 |
| 6037139802 | 9.73 | 12.65 | 10-15% | 3865 | Los Angeles | 10.7 | 67.7 | 21.6 | 4.6 | 83.4 | 2.2 | 0 | 6 | 3.8 |

| | | | | | | | | | | | | | | |
|---|---|---|---|---|---|---|---|---|---|---|---|---|---|---|
| 6073008352 | 9.72 | 12.64 | 10-15% | 3517 | San Diego | 14 | 75.7 | 10.3 | 16.7 | 28.9 | 3.9 | 0.1 | 44.6 | 5.8 |
| 6075031100 | 9.72 | 12.62 | 10-15% | 6193 | San Francisco | 8.8 | 77.7 | 13.5 | 18 | 42.6 | 3 | 0.3 | 31.5 | 4.6 |
| 6075042602 | 9.71 | 12.61 | 10-15% | 3243 | San Francisco | 11.4 | 74.7 | 13.9 | 5.6 | 53.6 | 1.3 | 0.3 | 34.3 | 4.9 |
| 6071010422 | 9.71 | 12.60 | 10-15% | 1645 | San Bernardino | 15.4 | 74.4 | 10.2 | 18.2 | 61.9 | 6.7 | 1 | 5.2 | 7.1 |
| 6037264302 | 9.70 | 12.59 | 10-15% | 5683 | Los Angeles | 8 | 75.1 | 16.9 | 5 | 80.5 | 1.3 | 0.1 | 8.6 | 4.4 |
| 6001423700 | 9.70 | 12.57 | 10-15% | 3633 | Alameda | 5.2 | 80.2 | 14.6 | 7.6 | 66 | 2.1 | 0.1 | 19.7 | 4.6 |
| 6037400501 | 9.69 | 12.56 | 10-15% | 2126 | Los Angeles | 7.3 | 73 | 19.7 | 15.5 | 74.6 | 0.3 | 0.1 | 7.1 | 2.4 |
| 6087120700 | 9.66 | 12.55 | 10-15% | 4120 | Santa Cruz | 10 | 78.1 | 11.9 | 6.7 | 87.7 | 0.5 | 0.3 | 1.9 | 2.9 |
| 6037269300 | 9.66 | 12.54 | 10-15% | 3885 | Los Angeles | 15.6 | 68.2 | 16.2 | 6.9 | 79.2 | 1.1 | 0 | 9.1 | 3.7 |
| 6111002000 | 9.66 | 12.52 | 10-15% | 2577 | Ventura | 9 | 72.8 | 18.2 | 10.7 | 83.1 | 0.7 | 0.4 | 2.6 | 2.5 |
| 6069000801 | 9.65 | 12.51 | 10-15% | 3082 | San Benito | 9 | 66.7 | 24.3 | 20.5 | 73.3 | 0.7 | 0.2 | 3.3 | 2 |
| 6013354001 | 9.65 | 12.50 | 10-15% | 1859 | Contra Costa | 12.7 | 70.8 | 16.5 | 3.7 | 81.4 | 1.1 | 0.1 | 8.3 | 5.3 |
| 6065045110 | 9.65 | 12.49 | 10-15% | 5401 | Riverside | 14.1 | 78.1 | 7.8 | 54.7 | 39.2 | 2.4 | 0.4 | 1.3 | 1.9 |
| 6083002708 | 9.64 | 12.47 | 10-15% | 2568 | Santa Barbara | 11.5 | 71.4 | 17.1 | 32.9 | 58.2 | 2.4 | 0.7 | 3.4 | 2.4 |
| 6075016900 | 9.64 | 12.46 | 10-15% | 2924 | San Francisco | 4.6 | 87 | 8.4 | 9.9 | 71.7 | 3.2 | 0.4 | 10 | 4.8 |
| 6037910301 | 9.64 | 12.45 | 10-15% | 4219 | Los Angeles | 9.5 | 77.8 | 12.7 | 18.2 | 68.6 | 6.2 | 0.8 | 4.2 | 2 |
| 6037261101 | 9.64 | 12.44 | 10-15% | 3499 | Los Angeles | 12.5 | 68.8 | 18.7 | 5 | 86.4 | 1.8 | 0.1 | 3.7 | 3.1 |
| 6059099307 | 9.63 | 12.42 | 10-15% | 2502 | Orange | 6.9 | 71.3 | 21.8 | 9.3 | 77.5 | 0.8 | 0.3 | 8.1 | 3.9 |
| 6053013300 | 9.63 | 12.41 | 10-15% | 5693 | Monterey | 11.6 | 77.8 | 10.6 | 29.7 | 53.8 | 3 | 0.4 | 9.1 | 4.1 |
| 6097151309 | 9.63 | 12.40 | 10-15% | 4865 | Sonoma | 9.9 | 79.6 | 10.5 | 15.1 | 75.1 | 1.1 | 0.7 | 4.6 | 3.4 |
| 6083002930 | 9.63 | 12.38 | 10-15% | 7328 | Santa Barbara | 10.9 | 82.1 | 7 | 33 | 48.9 | 1.9 | 0.3 | 12.5 | 3.5 |
| 6001405000 | 9.62 | 12.37 | 10-15% | 3136 | Alameda | 13.8 | 73.4 | 12.8 | 7.3 | 65.6 | 9.6 | 0.2 | 12 | 5.3 |
| 6085502906 | 9.62 | 12.36 | 10-15% | 4521 | Santa Clara | 13.9 | 76.5 | 9.6 | 23.1 | 58.4 | 2.4 | 0.4 | 11.7 | 4 |
| 6073017403 | 9.62 | 12.35 | 10-15% | 4922 | San Diego | 9.4 | 69.2 | 21.4 | 10.5 | 82.5 | 0.3 | 0.2 | 3.7 | 2.7 |
| 6041130202 | 9.62 | 12.33 | 10-15% | 4453 | Marin | 6.2 | 73.7 | 20.1 | 3.8 | 87.8 | 1 | 0.1 | 4.5 | 2.7 |
| 6065940800 | 9.61 | 12.32 | 10-15% | 2613 | Riverside | 2 | 52.9 | 45.1 | 7.6 | 87.5 | 1.5 | 0.4 | 1.6 | 1.5 |
| 6059042205 | 9.60 | 12.31 | 10-15% | 6780 | Orange | 11.6 | 73.6 | 14.8 | 20.1 | 73.5 | 0.4 | 0.1 | 3.3 | 2.6 |
| 6083001203 | 9.60 | 12.30 | 10-15% | 2757 | Santa Barbara | 6.7 | 75.2 | 18.1 | 14.1 | 76.1 | 1.2 | 0.2 | 5.9 | 2.4 |
| 6073009706 | 9.60 | 12.28 | 10-15% | 6996 | San Diego | 8.9 | 63.9 | 27.2 | 10.1 | 78.2 | 2.5 | 0.3 | 5.8 | 3 |
| 6083000302 | 9.59 | 12.27 | 10-15% | 4138 | Santa Barbara | 9.5 | 78.5 | 12 | 37.5 | 54.6 | 1.4 | 0.4 | 4 | 2.2 |
| 6037408706 | 9.57 | 12.26 | 10-15% | 1665 | Los Angeles | 8.4 | 78.1 | 13.5 | 15.5 | 14.2 | 0.5 | 0 | 67.6 | 2.2 |
| 6073017810 | 9.57 | 12.25 | 10-15% | 4942 | San Diego | 8.5 | 72.8 | 18.7 | 11.6 | 80.8 | 0.6 | 0.4 | 3.6 | 2.9 |
| 6083002914 | 9.57 | 12.23 | 10-15% | 3248 | Santa Barbara | 9 | 65.7 | 25.3 | 15.9 | 71.7 | 0.6 | 0.1 | 9.7 | 2.1 |
| 6037573700 | 9.57 | 12.22 | 10-15% | 4554 | Los Angeles | 12.3 | 74.7 | 13 | 19.7 | 66.8 | 2.2 | 0.4 | 7.2 | 3.7 |
| 6045011800 | 9.57 | 12.21 | 10-15% | 2082 | Mendocino | 11.9 | 74.1 | 14 | 26.1 | 62.2 | 0.3 | 7.9 | 1.1 | 2.4 |
| 6067008144 | 9.56 | 12.20 | 10-15% | 2541 | Sacramento | 11.3 | 76.1 | 12.6 | 11 | 79.9 | 2.2 | 0.4 | 3.1 | 3.4 |
| 6073009705 | 9.54 | 12.18 | 10-15% | 3652 | San Diego | 11.7 | 67.3 | 21 | 15 | 70.6 | 4.9 | 0.3 | 4.3 | 4.9 |
| 6073013419 | 9.53 | 12.17 | 10-15% | 7922 | San Diego | 17.6 | 76.1 | 6.3 | 48.3 | 24.4 | 4.8 | 0.1 | 18.6 | 3.7 |
| 6067000200 | 9.53 | 12.16 | 10-15% | 3497 | Sacramento | 11.3 | 75 | 13.7 | 11 | 80.9 | 1 | 0.4 | 3.7 | 3 |
| 6001450601 | 9.53 | 12.15 | 10-15% | 3379 | Alameda | 9.4 | 78 | 12.6 | 6.9 | 64.9 | 1.7 | 0.2 | 22.6 | 3.6 |
| 6037701202 | 9.53 | 12.13 | 10-15% | 3268 | Los Angeles | 8.9 | 78.8 | 12.3 | 7.5 | 76.9 | 1.2 | 0 | 9.4 | 5 |
| 6059099215 | 9.53 | 12.12 | 10-15% | 5203 | Orange | 11.4 | 79.6 | 9 | 18.1 | 65.6 | 0.7 | 0.3 | 10.6 | 4.8 |
| 6085503333 | 9.52 | 12.11 | 10-15% | 4585 | Santa Clara | 14.8 | 77 | 8.2 | 27 | 18.5 | 3.9 | 0.2 | 47.4 | 3.1 |
| 6111001202 | 9.51 | 12.09 | 10-15% | 7191 | Ventura | 11.5 | 75.2 | 13.3 | 21.2 | 69.9 | 0.9 | 0.3 | 4.1 | 3.5 |
| 6081606500 | 9.49 | 12.08 | 10-15% | 3613 | San Mateo | 15.5 | 66.3 | 18.2 | 8.9 | 75.1 | 0.7 | 0.1 | 11.6 | 3.5 |
| 6073008307 | 9.48 | 12.07 | 10-15% | 3794 | San Diego | 8.6 | 65.9 | 25.5 | 7.5 | 76.1 | 0.8 | 0.2 | 12.2 | 3.2 |
| 6089010601 | 9.48 | 12.06 | 10-15% | 2492 | Shasta | 10.4 | 70.5 | 19.1 | 7.2 | 83.7 | 1.1 | 1.2 | 3.8 | 2.9 |
| 6013362000 | 9.47 | 12.04 | 10-15% | 2767 | Contra Costa | 10.1 | 73.8 | 16.1 | 14.9 | 53.8 | 11.2 | 0 | 13.2 | 6.9 |
| 6081609201 | 9.46 | 12.03 | 10-15% | 3574 | San Mateo | 13.9 | 71.9 | 14.2 | 11.8 | 73.5 | 0.4 | 0.2 | 9.6 | 4.4 |
| 6073007908 | 9.44 | 12.02 | 10-15% | 2819 | San Diego | 4.9 | 90.3 | 4.8 | 19 | 73.2 | 1.2 | 0.2 | 3.3 | 3 |
| 6065051400 | 9.44 | 12.01 | 10-15% | 6956 | Riverside | 0.1 | 16.7 | 83.2 | 2.5 | 94.7 | 0.8 | 0.1 | 1.4 | 0.5 |
| 6073008329 | 9.44 | 11.99 | 10-15% | 6347 | San Diego | 11 | 83 | 6 | 8.3 | 62.8 | 1.4 | 0.2 | 23.5 | 3.7 |
| 6019005517 | 9.44 | 11.98 | 10-15% | 7487 | Fresno | 14.2 | 75.6 | 10.2 | 15.1 | 65.9 | 1.5 | 0.4 | 14.4 | 2.7 |
| 6037460800 | 9.43 | 11.97 | 10-15% | 3248 | Los Angeles | 9.5 | 65.9 | 24.6 | 8.9 | 72.2 | 2.5 | 0 | 13 | 3.4 |
| 6065045215 | 9.43 | 11.96 | 10-15% | 8515 | Riverside | 13.1 | 75.6 | 11.3 | 27.5 | 62.9 | 1.5 | 0.3 | 5.6 | 2.3 |
| 6001442100 | 9.43 | 11.94 | 10-15% | 5166 | Alameda | 11.8 | 74.5 | 13.7 | 2.7 | 20.6 | 0.7 | 0 | 73.8 | 2.2 |
| 6035040305 | 9.43 | 11.93 | 10-15% | 4146 | Lassen | 14.9 | 76.5 | 8.6 | 11.8 | 74.9 | 1 | 6.8 | 1.8 | 3.8 |
| 6085508101 | 9.42 | 11.92 | 10-15% | 6740 | Santa Clara | 20.1 | 68.4 | 11.5 | 3.1 | 27 | 0.6 | 0.1 | 66.4 | 2.8 |
| 6037620702 | 9.42 | 11.91 | 10-15% | 7059 | Los Angeles | 16 | 74.6 | 9.4 | 14.5 | 65.2 | 1.9 | 0.2 | 12.9 | 5.3 |
| 6059042333 | 9.42 | 11.89 | 10-15% | 4014 | Orange | 8 | 78.5 | 13.5 | 6.6 | 75.8 | 0.9 | 0 | 13 | 3.7 |
| 6067000100 | 9.42 | 11.88 | 10-15% | 3558 | Sacramento | 11.7 | 69 | 19.3 | 9.9 | 82.7 | 0.5 | 0.3 | 4 | 2.6 |
| 6023010400 | 9.42 | 11.87 | 10-15% | 3688 | Humboldt | 12.4 | 77 | 10.6 | 6.9 | 82.9 | 0.7 | 4.3 | 0.8 | 4.4 |
| 6075021000 | 9.41 | 11.86 | 10-15% | 4196 | San Francisco | 6.4 | 85.8 | 7.8 | 21.8 | 62.4 | 1.8 | 0.2 | 10 | 3.8 |
| 6073009505 | 9.41 | 11.84 | 10-15% | 6442 | San Diego | 11.3 | 77.4 | 11.3 | 9.6 | 67.1 | 2.5 | 0.3 | 16 | 4.5 |
| 6037920107 | 9.41 | 11.83 | 10-15% | 3954 | Los Angeles | 21 | 76.2 | 2.8 | 18.1 | 47.8 | 4.3 | 0.1 | 25.3 | 4.5 |
| 6073016608 | 9.40 | 11.82 | 10-15% | 2526 | San Diego | 12.7 | 78 | 9.3 | 13 | 79 | 0.9 | 0.9 | 3 | 3.2 |

| | | | | | | | | | | | | | | |
|---|---|---|---|---|---|---|---|---|---|---|---|---|---|---|
| 6037800408 | 9.40 | 11.80 | 10-15% | 7122 | Los Angeles | 8.6 | 73.6 | 17.8 | 6.1 | 88 | 0.9 | 0.1 | 2.2 | 2.6 |
| 6059032002 | 9.40 | 11.79 | 10-15% | 6210 | Orange | 11.7 | 72.7 | 15.6 | 15.9 | 73.5 | 1.3 | 0.1 | 6.6 | 2.5 |
| 6037480002 | 9.40 | 11.78 | 10-15% | 3453 | Los Angeles | 10.1 | 70.4 | 19.5 | 17.5 | 28.8 | 0.8 | 0.1 | 50.4 | 2.4 |
| 6059062605 | 9.40 | 11.77 | 10-15% | 3094 | Orange | 6 | 78.7 | 15.3 | 9.2 | 85.2 | 0.5 | 0.3 | 2.1 | 2.7 |
| 6113011205 | 9.38 | 11.75 | 10-15% | 8123 | Yolo | 16.7 | 77.5 | 5.8 | 46.8 | 34.7 | 1.2 | 0.4 | 13.5 | 3.5 |
| 6087121600 | 9.38 | 11.74 | 10-15% | 6159 | Santa Cruz | 9.4 | 79.7 | 10.9 | 19.7 | 73.6 | 0.8 | 0.5 | 2.4 | 2.9 |
| 6111005203 | 9.38 | 11.73 | 10-15% | 5226 | Ventura | 10.1 | 71.9 | 18 | 18.3 | 71.5 | 1.4 | 0.2 | 5.3 | 3.2 |
| 6013385100 | 9.37 | 11.72 | 10-15% | 2765 | Contra Costa | 9.1 | 64.4 | 26.5 | 7.9 | 56.3 | 5.5 | 0.3 | 25 | 5 |
| 6001436402 | 9.37 | 11.70 | 10-15% | 2618 | Alameda | 8.4 | 71.9 | 19.7 | 16.7 | 52.1 | 12.6 | 0.5 | 13.4 | 4.7 |
| 6059063010 | 9.37 | 11.69 | 10-15% | 7096 | Orange | 10.9 | 75.1 | 14 | 8.8 | 82.5 | 0.8 | 0.1 | 5.3 | 2.5 |
| 6073020107 | 9.36 | 11.68 | 10-15% | 3837 | San Diego | 14.3 | 76 | 9.7 | 37.9 | 50.7 | 1.8 | 0.6 | 6.8 | 2.3 |
| 6059042339 | 9.35 | 11.67 | 10-15% | 3208 | Orange | 10.3 | 75.4 | 14.3 | 19.8 | 73.1 | 1.2 | 0.2 | 3.3 | 2.4 |
| 6085504308 | 9.35 | 11.65 | 10-15% | 4415 | Santa Clara | 10.4 | 71.9 | 17.7 | 16.5 | 30.7 | 2.7 | 0 | 46.3 | 3.8 |
| 6045011001 | 9.35 | 11.64 | 10-15% | 1952 | Mendocino | 6.6 | 66.5 | 26.9 | 4.6 | 89.9 | 0.1 | 0.9 | 1.1 | 3.4 |
| 6041133000 | 9.34 | 11.63 | 10-15% | 3226 | Marin | 9.9 | 71.7 | 18.4 | 17.7 | 78.5 | 0.4 | 0.3 | 1.3 | 1.7 |
| 6027000300 | 9.34 | 11.62 | 10-15% | 2457 | Inyo | 7.9 | 66.7 | 25.4 | 10.1 | 85.9 | 0.2 | 0.5 | 1.6 | 1.8 |
| 6087121403 | 9.34 | 11.60 | 10-15% | 3362 | Santa Cruz | 10.6 | 79.6 | 9.8 | 23.6 | 68.4 | 1.6 | 0.4 | 2.9 | 3.1 |
| 6073013311 | 9.32 | 11.59 | 10-15% | 9463 | San Diego | 14.3 | 79.7 | 6 | 44.1 | 23.9 | 5.7 | 0.2 | 22.3 | 3.7 |
| 6067008145 | 9.32 | 11.58 | 10-15% | 7345 | Sacramento | 11.9 | 76.7 | 11.4 | 10.4 | 80.7 | 1.1 | 0.7 | 3.8 | 3.2 |
| 6013323000 | 9.30 | 11.57 | 10-15% | 4352 | Contra Costa | 12.9 | 74.6 | 12.5 | 12.3 | 74.9 | 0.7 | 0.4 | 7.5 | 4.3 |
| 6087121200 | 9.30 | 11.55 | 10-15% | 6114 | Santa Cruz | 9.1 | 77.9 | 13 | 7.1 | 85.3 | 0.6 | 0.2 | 3.4 | 3.5 |
| 6001450606 | 9.30 | 11.54 | 10-15% | 5733 | Alameda | 11.5 | 78.1 | 10.4 | 6.3 | 66.5 | 1.1 | 0.2 | 22.2 | 3.8 |
| 6059052520 | 9.29 | 11.53 | 10-15% | 3460 | Orange | 11.2 | 76.8 | 12 | 8.2 | 60.5 | 1.5 | 0.1 | 25.3 | 4.5 |
| 6085502302 | 9.29 | 11.51 | 10-15% | 2826 | Santa Clara | 14.9 | 75.7 | 9.4 | 28.5 | 56.9 | 2.9 | 0.5 | 7.4 | 3.8 |
| 6013343002 | 9.29 | 11.50 | 10-15% | 4380 | Contra Costa | 8.8 | 65.8 | 25.4 | 6.9 | 77.2 | 1.9 | 0.2 | 10.5 | 3.3 |
| 6065044930 | 9.29 | 11.49 | 10-15% | 3213 | Riverside | 13.8 | 61.3 | 24.9 | 40.9 | 51.9 | 1.1 | 0.1 | 4.6 | 1.4 |
| 6073008343 | 9.28 | 11.48 | 10-15% | 4587 | San Diego | 9.1 | 83.6 | 7.3 | 11.6 | 42.4 | 1.9 | 0.2 | 40.1 | 3.8 |
| 6073008363 | 9.28 | 11.46 | 10-15% | 4921 | San Diego | 6.4 | 91.4 | 2.2 | 9.2 | 32.7 | 1.1 | 0.1 | 53.3 | 3.7 |
| 6097151311 | 9.27 | 11.45 | 10-15% | 6382 | Sonoma | 10.8 | 85 | 4.2 | 16.4 | 70.1 | 1.6 | 0.4 | 7.7 | 3.9 |
| 6081605200 | 9.27 | 11.44 | 10-15% | 3626 | San Mateo | 17.4 | 69.1 | 13.5 | 8.6 | 72.8 | 0.4 | 0.1 | 14.4 | 3.8 |
| 6085503326 | 9.27 | 11.43 | 10-15% | 6650 | Santa Clara | 17.7 | 75.6 | 6.7 | 11.3 | 8 | 1.4 | 0 | 77.2 | 2.2 |
| 6063000201 | 9.27 | 11.41 | 10-15% | 1844 | Plumas | 5.1 | 57.5 | 37.4 | 3.5 | 93.9 | 0.1 | 0.4 | 0.7 | 1.4 |
| 6097153903 | 9.27 | 11.40 | 10-15% | 3760 | Sonoma | 9.7 | 73.9 | 16.4 | 19.5 | 77.4 | 0.5 | 0.4 | 0.9 | 1.3 |
| 6073017032 | 9.27 | 11.39 | 10-15% | 13593 | San Diego | 18.3 | 75.5 | 6.2 | 9.3 | 52.2 | 2.2 | 0.1 | 31.3 | 4.8 |
| 6095252310 | 9.26 | 11.38 | 10-15% | 3156 | Solano | 10.3 | 70.7 | 19 | 11 | 62.5 | 5.7 | 0.3 | 16.8 | 3.8 |
| 6073019301 | 9.25 | 11.36 | 10-15% | 6936 | San Diego | 12.1 | 78.2 | 9.7 | 22.8 | 59.9 | 3 | 0.4 | 10.3 | 3.7 |
| 6059042114 | 9.25 | 11.35 | 10-15% | 3718 | Orange | 10.3 | 71.8 | 17.9 | 17.5 | 75.8 | 0.8 | 0.6 | 2.8 | 2.4 |
| 6065044921 | 9.25 | 11.34 | 10-15% | 2355 | Riverside | 8.4 | 56 | 35.6 | 9.7 | 79.2 | 2.3 | 0.7 | 6.6 | 1.5 |
| 6073020706 | 9.24 | 11.33 | 10-15% | 6286 | San Diego | 9.6 | 73.4 | 17 | 18.1 | 73.9 | 0.9 | 0.4 | 4.3 | 2.4 |
| 6073020026 | 9.24 | 11.31 | 10-15% | 4089 | San Diego | 10.4 | 65.4 | 24.2 | 17.1 | 71.8 | 1.1 | 0.4 | 6.3 | 3.2 |
| 6087120302 | 9.24 | 11.30 | 10-15% | 2602 | Santa Cruz | 9.4 | 82.5 | 8.1 | 8.8 | 85.6 | 0.3 | 0.8 | 1 | 3.4 |
| 6111006301 | 9.23 | 11.29 | 10-15% | 6573 | Ventura | 10.3 | 68 | 21.7 | 12.3 | 76.8 | 1 | 0.1 | 6.7 | 3.1 |
| 6059032041 | 9.22 | 11.28 | 10-15% | 1022 | Orange | 11 | 81.1 | 7.9 | 15.8 | 75.4 | 0.8 | 0.6 | 4.6 | 2.8 |
| 6059032036 | 9.21 | 11.26 | 10-15% | 3539 | Orange | 11.4 | 73.1 | 15.5 | 16 | 71.5 | 0.6 | 0.3 | 7.9 | 3.6 |
| 6075016700 | 9.21 | 11.25 | 10-15% | 4652 | San Francisco | 5.8 | 89.2 | 5 | 10 | 70.2 | 5.5 | 0.4 | 9.2 | 4.7 |
| 6059099216 | 9.20 | 11.24 | 10-15% | 4000 | Orange | 11.6 | 75.2 | 13.2 | 13.4 | 71.8 | 0.6 | 0.2 | 10.5 | 3.5 |
| 6085509700 | 9.20 | 11.22 | 10-15% | 3128 | Santa Clara | 12.5 | 78.8 | 8.7 | 17.6 | 57 | 1.3 | 0.3 | 20 | 3.8 |
| 6081611300 | 9.17 | 11.21 | 10-15% | 4757 | San Mateo | 11.3 | 72.9 | 15.8 | 17.7 | 69.6 | 1.1 | 0.1 | 8.3 | 3.1 |
| 6085503001 | 9.16 | 11.20 | 10-15% | 4063 | Santa Clara | 12.8 | 70.3 | 16.9 | 13.1 | 74.3 | 1 | 0.2 | 8.5 | 2.9 |
| 6083001905 | 9.16 | 11.19 | 10-15% | 3231 | Santa Barbara | 8.1 | 72.9 | 19 | 16.3 | 78.6 | 0.8 | 0.2 | 2.8 | 1.2 |
| 6037262501 | 9.14 | 11.17 | 10-15% | 3662 | Los Angeles | 14.8 | 66.2 | 19 | 4.3 | 89.8 | 0.3 | 0.1 | 3.3 | 2.2 |
| 6013351102 | 9.13 | 11.16 | 10-15% | 3635 | Contra Costa | 0.1 | 14.9 | 85 | 2.7 | 88.8 | 0.5 | 0.2 | 6.4 | 1.3 |
| 6037262601 | 9.13 | 11.15 | 10-15% | 3660 | Los Angeles | 11 | 71.6 | 17.4 | 3.4 | 84 | 1.2 | 0 | 8.5 | 2.9 |
| 6111007607 | 9.13 | 11.14 | 10-15% | 6152 | Ventura | 10.7 | 81.8 | 7.5 | 12.7 | 74.2 | 1.3 | 0.3 | 7.9 | 3.6 |
| 6083002005 | 9.13 | 11.12 | 10-15% | 4967 | Santa Barbara | 13.4 | 69 | 17.6 | 21.8 | 70.4 | 1.7 | 0.7 | 3.1 | 2.4 |
| 6087122003 | 9.12 | 11.11 | 10-15% | 6543 | Santa Cruz | 10.1 | 74.6 | 15.3 | 15.8 | 73.8 | 1.1 | 0.2 | 5.3 | 3.7 |
| 6059062900 | 9.10 | 11.10 | 10-15% | 1626 | Orange | 4.9 | 57.9 | 37.2 | 4.6 | 92.1 | 0.2 | 0.1 | 2.3 | 0.8 |
| 6059042334 | 9.10 | 11.09 | 10-15% | 5300 | Orange | 11.4 | 74.2 | 14.4 | 18.8 | 64.4 | 1.1 | 0.2 | 11.3 | 4.2 |
| 6045010801 | 9.10 | 11.07 | 10-15% | 5915 | Mendocino | 11.9 | 75.1 | 13 | 17.6 | 73.9 | 0.4 | 4.7 | 0.9 | 2.5 |
| 6079012302 | 9.10 | 11.06 | 10-15% | 5137 | San Luis Obispo | 9.6 | 72.7 | 17.7 | 11.1 | 84.1 | 0.2 | 0.6 | 1.6 | 2.4 |
| 6085512036 | 9.09 | 11.05 | 10-15% | 4585 | Santa Clara | 16.7 | 77.6 | 5.7 | 20.2 | 38.8 | 3.4 | 0.2 | 32.7 | 4.7 |
| 6041103200 | 9.09 | 11.04 | 10-15% | 6504 | Marin | 10.7 | 69.8 | 19.5 | 21 | 66.1 | 3.1 | 0.2 | 6 | 3.6 |
| 6037700600 | 9.09 | 11.02 | 10-15% | 5537 | Los Angeles | 9.2 | 67 | 23.8 | 5.4 | 84.8 | 0.9 | 0 | 4.3 | 4.6 |
| 6059042206 | 9.07 | 11.01 | 10-15% | 3287 | Orange | 8.5 | 65.2 | 26.3 | 11.7 | 83.4 | 0.3 | 0.3 | 2.5 | 1.8 |
| 6073019105 | 9.07 | 11.00 | 10-15% | 5722 | San Diego | 8.1 | 68.8 | 23.1 | 14.7 | 74.9 | 1.3 | 0.3 | 6.6 | 2.2 |
| 6059062640 | 9.06 | 10.98 | 10-15% | 3407 | Orange | 10.3 | 85.4 | 4.3 | 13.6 | 67.4 | 1.8 | 0.2 | 12.8 | 4.2 |

| | | | | | | | | | | | | | | | |
|---|---|---|---|---|---|---|---|---|---|---|---|---|---|---|---|
| 6115041100 | 9.06 | 10.97 | 10-15% | 4941 | Yuba | 9.9 | 71.5 | 18.6 | 6.4 | 83.4 | 0.5 | 3.2 | 1.3 | 5.2 |
| 6013351103 | 9.05 | 10.96 | 10-15% | 1846 | Contra Costa | 0 | 10.7 | 89.3 | 1.2 | 91 | 0.4 | 0 | 6.6 | 0.8 |
| 6073017040 | 9.05 | 10.95 | 10-15% | 4363 | San Diego | 11.2 | 77.9 | 10.9 | 17.9 | 62.4 | 1.8 | 0.4 | 13.7 | 3.8 |
| 6013341000 | 9.05 | 10.93 | 10-15% | 4864 | Contra Costa | 11.5 | 75.5 | 13 | 9 | 75.8 | 1.2 | 0.2 | 9.5 | 4.4 |
| 6075030301 | 9.03 | 10.92 | 10-15% | 5658 | San Francisco | 9.1 | 74.4 | 16.5 | 7 | 47.1 | 1.4 | 0.1 | 39.6 | 4.9 |
| 6073020013 | 9.03 | 10.91 | 10-15% | 12473 | San Diego | 19.5 | 71.8 | 8.7 | 13.9 | 69.2 | 1.8 | 0.2 | 11 | 3.9 |
| 6105000300 | 9.02 | 10.90 | 10-15% | 3105 | Trinity | 8.6 | 72.7 | 18.7 | 7.4 | 80.7 | 0.1 | 5.4 | 0.5 | 5.9 |
| 6085509109 | 9.01 | 10.88 | 10-15% | 4346 | Santa Clara | 14.6 | 80.7 | 4.7 | 12.5 | 44.5 | 1.9 | 0 | 36.6 | 4.4 |
| 6081606400 | 9.00 | 10.87 | 10-15% | 4820 | San Mateo | 8.8 | 66.1 | 25.1 | 10.4 | 62.8 | 1.8 | 0.1 | 20.9 | 4.1 |
| 6085511302 | 8.98 | 10.86 | 10-15% | 4062 | Santa Clara | 7.5 | 67.9 | 24.6 | 5.3 | 71.4 | 1.8 | 0.2 | 17.3 | 4 |
| 6037264102 | 8.98 | 10.85 | 10-15% | 2873 | Los Angeles | 6.3 | 81 | 12.7 | 6.3 | 78.1 | 1.8 | 0 | 9.9 | 3.9 |
| 6001430300 | 8.97 | 10.83 | 10-15% | 3670 | Alameda | 9.3 | 72.2 | 18.5 | 12.6 | 65.4 | 2.8 | 0.2 | 14.9 | 4 |
| 6041101100 | 8.97 | 10.82 | 10-15% | 2569 | Marin | 8.7 | 70.6 | 20.7 | 6.9 | 84.9 | 0.7 | 0.2 | 4.7 | 2.7 |
| 6073008353 | 8.96 | 10.81 | 10-15% | 5048 | San Diego | 11.5 | 77.7 | 10.8 | 11.7 | 38.8 | 3.8 | 0.3 | 39 | 6.2 |
| 6001420200 | 8.96 | 10.80 | 10-15% | 2898 | Alameda | 12.2 | 77.3 | 10.5 | 11.4 | 46 | 3.1 | 0.2 | 32.3 | 7 |
| 6037261200 | 8.95 | 10.78 | 10-15% | 4341 | Los Angeles | 11.3 | 67.6 | 21.1 | 4.8 | 83.2 | 0.9 | 0.1 | 6.7 | 4.4 |
| 6081605100 | 8.94 | 10.77 | 10-15% | 3014 | San Mateo | 13.2 | 76.7 | 10.1 | 14.9 | 62.6 | 1.1 | 0.1 | 16 | 5.3 |
| 6085507904 | 8.94 | 10.76 | 10-15% | 3367 | Santa Clara | 11.8 | 73.7 | 14.5 | 2.1 | 31.1 | 0.4 | 0.1 | 63.6 | 2.7 |
| 6085512200 | 8.94 | 10.75 | 10-15% | 4014 | Santa Clara | 12 | 74.6 | 13.4 | 20.1 | 67.1 | 0.9 | 0.3 | 8.9 | 2.7 |
| 6111006400 | 8.94 | 10.73 | 10-15% | 7126 | Ventura | 11.1 | 73.3 | 15.6 | 15.2 | 74.7 | 0.9 | 0.2 | 6.3 | 2.8 |
| 6073020015 | 8.94 | 10.72 | 10-15% | 3841 | San Diego | 8.4 | 75.4 | 16.2 | 8.6 | 81.4 | 0.7 | 0.3 | 5.8 | 3.2 |
| 6065045103 | 8.92 | 10.71 | 10-15% | 3623 | Riverside | 6.7 | 57.4 | 35.9 | 22.7 | 72.3 | 1 | 0.1 | 2.5 | 1.4 |
| 6073008312 | 8.92 | 10.69 | 10-15% | 3629 | San Diego | 7.3 | 61.5 | 31.2 | 7.3 | 81.8 | 0.6 | 0.1 | 7.5 | 2.8 |
| 6023940000 | 8.91 | 10.68 | 10-15% | 3041 | Humboldt | 19.8 | 71.8 | 8.4 | 6.2 | 10.5 | 0.1 | 78.5 | 0.3 | 4.4 |
| 6023000800 | 8.90 | 10.67 | 10-15% | 4668 | Humboldt | 11.6 | 71.1 | 17.3 | 8.1 | 80.6 | 1 | 2.7 | 3.5 | 4.1 |
| 6037143902 | 8.90 | 10.66 | 10-15% | 3000 | Los Angeles | 10.7 | 75.9 | 13.4 | 7.3 | 81.3 | 3.2 | 0.2 | 5.3 | 2.8 |
| 6037920108 | 8.89 | 10.64 | 10-15% | 3439 | Los Angeles | 19.2 | 76.5 | 4.3 | 13.6 | 50.6 | 4.4 | 0.1 | 27.6 | 3.7 |
| 6001450744 | 8.89 | 10.63 | 10-15% | 4831 | Alameda | 13.9 | 77.2 | 8.9 | 9 | 60.8 | 1.8 | 0.2 | 23.7 | 4.6 |
| 6001403701 | 8.89 | 10.62 | 10-15% | 2587 | Alameda | 4.4 | 79.2 | 16.4 | 9.1 | 49.7 | 21 | 0.4 | 13.8 | 5.9 |
| 6037650502 | 8.87 | 10.61 | 10-15% | 4294 | Los Angeles | 10 | 72.6 | 17.4 | 11.6 | 55.6 | 1.7 | 0.3 | 26.3 | 4.4 |
| 6041121100 | 8.86 | 10.59 | 10-15% | 5175 | Marin | 13.7 | 71.2 | 15.1 | 9.3 | 80.7 | 0.7 | 0 | 5.1 | 4.2 |
| 6059032033 | 8.85 | 10.58 | 10-15% | 3624 | Orange | 12.8 | 80.7 | 6.5 | 21.9 | 60.2 | 1.8 | 0.1 | 11.9 | 4.1 |
| 6087120800 | 8.84 | 10.57 | 10-15% | 5863 | Santa Cruz | 9.8 | 68.1 | 22.1 | 7.3 | 85.2 | 0.3 | 0.3 | 3.8 | 3 |
| 6081609000 | 8.83 | 10.56 | 10-15% | 2562 | San Mateo | 11.7 | 67.8 | 20.5 | 11.1 | 67.7 | 1.4 | 0.1 | 15.1 | 4.6 |
| 6037576700 | 8.83 | 10.54 | 10-15% | 4047 | Los Angeles | 6.9 | 80.2 | 12.9 | 19.4 | 64.7 | 5.6 | 0.4 | 6.3 | 3.7 |
| 6057000104 | 8.83 | 10.53 | 10-15% | 3190 | Nevada | 6.4 | 62.1 | 31.5 | 6 | 89.7 | 0.2 | 0.8 | 0.8 | 2.6 |
| 6087100400 | 8.82 | 10.52 | 10-15% | 7331 | Santa Cruz | 2.1 | 97.6 | 0.3 | 21.4 | 48.7 | 1.7 | 0.2 | 21.1 | 6.9 |
| 6085510001 | 8.81 | 10.51 | 10-15% | 6116 | Santa Clara | 14.1 | 66.3 | 19.6 | 3.3 | 66.2 | 0.7 | 0.1 | 25.5 | 4.3 |
| 6081608002 | 8.79 | 10.49 | 10-15% | 3517 | San Mateo | 12.6 | 70.8 | 16.6 | 5 | 50.5 | 1.8 | 0 | 39.5 | 3.2 |
| 6073009801 | 8.78 | 10.48 | 10-15% | 4894 | San Diego | 9.5 | 66.8 | 23.7 | 12.9 | 74.2 | 3.7 | 0.3 | 5.6 | 3.3 |
| 6075016801 | 8.78 | 10.47 | 10-15% | 3218 | San Francisco | 5 | 89.7 | 5.3 | 12.1 | 64.5 | 8.2 | 0.3 | 9.7 | 5.2 |
| 6041111000 | 8.78 | 10.46 | 10-15% | 5852 | Marin | 9.6 | 81.7 | 8.7 | 23.8 | 63.3 | 3 | 0.3 | 5.8 | 3.8 |
| 6067002500 | 8.77 | 10.44 | 10-15% | 1587 | Sacramento | 11.3 | 73.9 | 14.8 | 9.6 | 78.8 | 2.8 | 0.1 | 4.4 | 4.2 |
| 6017031406 | 8.76 | 10.43 | 10-15% | 5544 | El Dorado | 11.2 | 72.4 | 16.4 | 6.2 | 89 | 0.3 | 1.4 | 0.9 | 2.3 |
| 6079012704 | 8.76 | 10.42 | 10-15% | 8650 | San Luis Obispo | 9.3 | 70.8 | 19.9 | 9.8 | 85.6 | 0.5 | 0.6 | 1.4 | 2 |
| 6013384000 | 8.76 | 10.40 | 10-15% | 3883 | Contra Costa | 11.6 | 69.3 | 19.1 | 8.3 | 52.9 | 10.2 | 0.4 | 21.3 | 7 |
| 6059099245 | 8.75 | 10.39 | 10-15% | 3035 | Orange | 9.3 | 76.1 | 14.6 | 11.8 | 72.1 | 1.2 | 0.3 | 10.9 | 3.7 |
| 6037920012 | 8.75 | 10.38 | 10-15% | 1072 | Los Angeles | 10.1 | 76.7 | 13.2 | 11.4 | 81.8 | 0.5 | 0.8 | 1.7 | 3.8 |
| 6037480703 | 8.75 | 10.37 | 10-15% | 3277 | Los Angeles | 12.8 | 75.6 | 11.6 | 21.8 | 42.4 | 2.6 | 0.1 | 28.2 | 4.9 |
| 6059042109 | 8.73 | 10.35 | 10-15% | 4865 | Orange | 11.2 | 76.4 | 12.4 | 14.3 | 75.5 | 0.8 | 0.2 | 5.6 | 3.6 |
| 6073016605 | 8.73 | 10.34 | 10-15% | 7339 | San Diego | 11.7 | 71 | 17.3 | 16.5 | 73.5 | 2 | 0.6 | 4.3 | 3.1 |
| 6073007905 | 8.72 | 10.33 | 10-15% | 2584 | San Diego | 3.2 | 89.9 | 6.9 | 8.4 | 83.6 | 1.2 | 0.3 | 3.4 | 3.1 |
| 6059032040 | 8.72 | 10.32 | 10-15% | 2612 | Orange | 11.1 | 78.8 | 10.1 | 9.6 | 76.6 | 0.8 | 0.1 | 9.6 | 3.2 |
| 6061023400 | 8.72 | 10.30 | 10-15% | 4479 | Placer | 19.5 | 74.6 | 5.9 | 15.2 | 72.6 | 1.7 | 0.6 | 5.7 | 4.2 |
| 6073017031 | 8.72 | 10.29 | 10-15% | 3853 | San Diego | 15.7 | 75.9 | 8.4 | 14.3 | 64.1 | 3.3 | 0.5 | 14 | 3.9 |
| 6043000301 | 8.72 | 10.28 | 10-15% | 3743 | Mariposa | 9 | 68.7 | 22.3 | 5.8 | 85.9 | 0.5 | 3 | 1.1 | 3.7 |
| 6073020811 | 8.71 | 10.27 | 10-15% | 5650 | San Diego | 11.4 | 75.3 | 13.3 | 11.2 | 82.8 | 0.9 | 0.8 | 1.8 | 2.5 |
| 6077004201 | 8.71 | 10.25 | 10-15% | 6412 | San Joaquin | 13.5 | 68.6 | 17.9 | 22.5 | 71.6 | 0.4 | 0.4 | 3.1 | 2 |
| 6085511301 | 8.70 | 10.24 | 10-15% | 3671 | Santa Clara | 10.1 | 68.7 | 21.2 | 6.7 | 72.1 | 3.3 | 0.1 | 13.9 | 4 |
| 6001451403 | 8.70 | 10.23 | 10-15% | 2220 | Alameda | 13.5 | 76.8 | 9.7 | 26.2 | 59.5 | 1.6 | 0.3 | 7.8 | 4.6 |
| 6065044517 | 8.70 | 10.22 | 10-15% | 2377 | Riverside | 6.8 | 64.4 | 28.8 | 15.4 | 74.5 | 4.3 | 0.4 | 3.4 | 2 |
| 6007000402 | 8.69 | 10.20 | 10-15% | 7030 | Butte | 12.3 | 70.3 | 17.4 | 11.6 | 81.3 | 1 | 0.7 | 2.8 | 2.6 |
| 6061020501 | 8.68 | 10.19 | 10-15% | 2879 | Placer | 9.2 | 72.6 | 18.2 | 8.4 | 86.1 | 0.4 | 0.8 | 2 | 2.3 |
| 6081607000 | 8.68 | 10.18 | 10-15% | 3241 | San Mateo | 11.8 | 68 | 20.2 | 10.6 | 60.2 | 1.1 | 0.1 | 24.1 | 3.9 |
| 6065045228 | 8.67 | 10.17 | 10-15% | 3936 | Riverside | 19.7 | 75.4 | 4.9 | 48.1 | 44.6 | 1.4 | 0.3 | 3.9 | 1.7 |
| 6037920045 | 8.66 | 10.15 | 10-15% | 4622 | Los Angeles | 11.8 | 82.8 | 5.4 | 20.1 | 64 | 2.8 | 0.4 | 9.3 | 3.4 |

| | | | | | | | | | | | | | | | |
|---|---|---|---|---|---|---|---|---|---|---|---|---|---|---|---|
| 6061022002 | 8.66 | 10.14 | 10-15% | 6481 | Placer | 10.5 | 74.4 | 15.1 | 7.9 | 86.7 | 0.3 | 0.9 | 0.8 | 3.4 |
| 6097152501 | 8.66 | 10.13 | 10-15% | 4178 | Sonoma | 12.8 | 77.8 | 9.4 | 16.8 | 72.1 | 1.8 | 0.9 | 4.8 | 3.5 |
| 6037670201 | 8.65 | 10.11 | 10-15% | 3852 | Los Angeles | 10.1 | 67.3 | 22.6 | 8.7 | 68.5 | 1.6 | 0 | 16.5 | 4.6 |
| 6073009703 | 8.65 | 10.10 | 10-15% | 3446 | San Diego | 9.9 | 70.5 | 19.6 | 13.9 | 76.8 | 2.3 | 0.4 | 3.5 | 3.2 |
| 6009000503 | 8.65 | 10.09 | 10-15% | 2330 | Calaveras | 7.3 | 63.3 | 29.4 | 5.8 | 90.3 | 0.4 | 0.6 | 1.1 | 1.8 |
| 6059001602 | 8.65 | 10.08 | 10-15% | 4687 | Orange | 8.8 | 70.8 | 20.4 | 12.3 | 61.1 | 1 | 0.2 | 22.6 | 2.9 |
| 6079010002 | 8.65 | 10.06 | 10-15% | 3030 | San Luis Obispo | 11 | 72.2 | 16.8 | 10.2 | 84.2 | 0.5 | 1.3 | 1.2 | 2.6 |
| 6073019808 | 8.63 | 10.05 | 10-15% | 4321 | San Diego | 7.3 | 45.3 | 47.4 | 10.1 | 80.9 | 1.8 | 0.1 | 5 | 2.1 |
| 6037480702 | 8.63 | 10.04 | 10-15% | 4460 | Los Angeles | 10.3 | 73.1 | 16.6 | 17.1 | 33.4 | 2.8 | 0.1 | 42.4 | 4.3 |
| 6075015802 | 8.61 | 10.03 | 10-15% | 2965 | San Francisco | 4.6 | 86.8 | 8.6 | 10.2 | 64.5 | 11.8 | 0.3 | 8.7 | 4.5 |
| 6065047201 | 8.61 | 10.01 | 10-15% | 1958 | Riverside | 7.6 | 44.4 | 48 | 30.5 | 66.5 | 0.4 | 0.8 | 0.5 | 1.3 |
| 6081608900 | 8.60 | 10.00 | 10-15% | 6556 | San Mateo | 11.2 | 73.4 | 15.4 | 11.4 | 58.9 | 1.4 | 0.2 | 23.4 | 4.7 |
| 6037265420 | 8.60 | 9.99 | 5-10% | 1811 | Los Angeles | 12 | 68.7 | 19.3 | 4.2 | 77.9 | 1.7 | 0 | 12.7 | 3.5 |
| 6017030902 | 8.60 | 9.98 | 5-10% | 4687 | El Dorado | 8.2 | 73.9 | 17.9 | 8.8 | 84.3 | 0.4 | 2.1 | 1.6 | 2.9 |
| 6081605300 | 8.59 | 9.96 | 5-10% | 4602 | San Mateo | 13 | 74 | 13 | 12.5 | 67 | 1.1 | 0.2 | 15.6 | 3.6 |
| 6013355301 | 8.59 | 9.95 | 5-10% | 7833 | Contra Costa | 12.3 | 75.4 | 12.3 | 13.7 | 65.4 | 1.8 | 0.2 | 14.2 | 4.7 |
| 6111000902 | 8.59 | 9.94 | 5-10% | 2026 | Ventura | 9.1 | 71.8 | 19.1 | 15.5 | 80.6 | 0.6 | 0.4 | 1.2 | 1.7 |
| 6013345101 | 8.59 | 9.93 | 5-10% | 5730 | Contra Costa | 14.3 | 75.4 | 10.3 | 13.7 | 59.1 | 2.5 | 0.1 | 20.2 | 4.4 |
| 6037920015 | 8.59 | 9.91 | 5-10% | 6353 | Los Angeles | 15.8 | 79.1 | 5.1 | 19.1 | 65.3 | 2.7 | 0.1 | 9.4 | 3.5 |
| 6073017401 | 8.58 | 9.90 | 5-10% | 5355 | San Diego | 9.3 | 81.1 | 9.6 | 7 | 85.9 | 0.4 | 0.5 | 3.1 | 3.1 |
| 6073017020 | 8.58 | 9.89 | 5-10% | 3694 | San Diego | 9.6 | 72.7 | 17.7 | 8.1 | 83.4 | 0.9 | 0.2 | 5.1 | 2.3 |
| 6073020801 | 8.57 | 9.88 | 5-10% | 5230 | San Diego | 8.9 | 78.3 | 12.8 | 13.3 | 81.1 | 1.5 | 0.5 | 2 | 1.6 |
| 6075031000 | 8.57 | 9.86 | 5-10% | 3494 | San Francisco | 10.2 | 73 | 16.8 | 10.6 | 49.3 | 2.8 | 0.2 | 32.7 | 4.3 |
| 6059032056 | 8.57 | 9.85 | 5-10% | 7072 | Orange | 17.3 | 76.5 | 6.2 | 13.7 | 68.6 | 1.4 | 0.1 | 12.2 | 4 |
| 6105000400 | 8.57 | 9.84 | 5-10% | 975 | Trinity | 9 | 74 | 17 | 4.3 | 84.5 | 0.1 | 5.2 | 0.2 | 5.6 |
| 6085502908 | 8.56 | 9.82 | 5-10% | 6683 | Santa Clara | 14.9 | 74.1 | 11 | 20.4 | 56.7 | 2.6 | 0.3 | 15.9 | 4.1 |
| 6081611400 | 8.56 | 9.81 | 5-10% | 4237 | San Mateo | 9.2 | 67.5 | 23.3 | 4.4 | 77.7 | 1.5 | 0 | 13.6 | 2.7 |
| 6105000101 | 8.56 | 9.80 | 5-10% | 2867 | Trinity | 8.2 | 69.2 | 22.6 | 6.7 | 86.1 | 0.3 | 2.4 | 1.2 | 3.3 |
| 6073008362 | 8.55 | 9.79 | 5-10% | 3141 | San Diego | 8 | 80.1 | 11.9 | 10.7 | 64.8 | 1.3 | 0.1 | 19.7 | 3.4 |
| 6013325000 | 8.53 | 9.77 | 5-10% | 5514 | Contra Costa | 12.5 | 71.5 | 16 | 10.9 | 76.2 | 1.8 | 0.2 | 6.5 | 4.4 |
| 6061023900 | 8.53 | 9.76 | 5-10% | 3100 | Placer | 17.1 | 72.9 | 10 | 18 | 72.6 | 1.3 | 1 | 3.7 | 3.4 |
| 6023000700 | 8.52 | 9.75 | 5-10% | 5360 | Humboldt | 11.4 | 68.2 | 20.4 | 7.6 | 82.5 | 0.8 | 2.5 | 2.6 | 3.9 |
| 6087120400 | 8.51 | 9.74 | 5-10% | 4993 | Santa Cruz | 9.9 | 81.8 | 8.3 | 8.3 | 84.8 | 1 | 0.4 | 1.7 | 3.8 |
| 6085509902 | 8.51 | 9.72 | 5-10% | 4838 | Santa Clara | 12 | 66.4 | 21.6 | 8.1 | 61.8 | 0.8 | 0.3 | 24.7 | 4.3 |
| 6059021823 | 8.50 | 9.71 | 5-10% | 3299 | Orange | 12.6 | 76.7 | 10.7 | 15.6 | 67.8 | 1.2 | 0.2 | 12.1 | 3.1 |
| 6017030901 | 8.49 | 9.70 | 5-10% | 3020 | El Dorado | 8.9 | 73.6 | 17.5 | 6.5 | 87.8 | 0.2 | 1.2 | 1.2 | 3.1 |
| 6061021902 | 8.49 | 9.69 | 5-10% | 4454 | Placer | 8.3 | 73.2 | 18.5 | 5.4 | 89.9 | 0.2 | 0.5 | 1.1 | 2.9 |
| 6059032055 | 8.48 | 9.67 | 5-10% | 3884 | Orange | 16 | 79.1 | 4.9 | 34.1 | 52.2 | 1.7 | 0.2 | 8.9 | 2.9 |
| 6067008506 | 8.48 | 9.66 | 5-10% | 2520 | Sacramento | 10.6 | 71.5 | 17.9 | 7.9 | 60.5 | 2.3 | 0.6 | 25.2 | 3.5 |
| 6085502601 | 8.48 | 9.65 | 5-10% | 2626 | Santa Clara | 10.4 | 62.4 | 27.2 | 11.5 | 75 | 1 | 0.2 | 9.1 | 3.2 |
| 6037401001 | 8.48 | 9.64 | 5-10% | 3140 | Los Angeles | 11.3 | 71.8 | 16.9 | 18.6 | 72.9 | 0.2 | 0.1 | 5.8 | 2.4 |
| 6059021829 | 8.47 | 9.62 | 5-10% | 5329 | Orange | 8.2 | 76.8 | 15 | 10.4 | 66.4 | 1.1 | 0.1 | 19.8 | 2.2 |
| 6113010505 | 8.46 | 9.61 | 5-10% | 4807 | Yolo | 13.6 | 78.8 | 7.6 | 12 | 62.9 | 1.7 | 0.4 | 19 | 4 |
| 6085511704 | 8.45 | 9.60 | 5-10% | 4520 | Santa Clara | 8.6 | 68.5 | 22.9 | 3 | 66.1 | 0.5 | 0 | 26.3 | 4 |
| 6073017808 | 8.45 | 9.59 | 5-10% | 5975 | San Diego | 12.3 | 67.1 | 20.6 | 6.1 | 81.8 | 0.7 | 0.2 | 7.5 | 3.7 |
| 6065045109 | 8.45 | 9.57 | 5-10% | 3831 | Riverside | 11.3 | 78.2 | 10.5 | 41.9 | 52.9 | 1.4 | 0.3 | 1.5 | 2 |
| 6017030809 | 8.45 | 9.56 | 5-10% | 2447 | El Dorado | 12.2 | 71.5 | 16.3 | 10.7 | 83.7 | 0.7 | 0.7 | 1.4 | 2.9 |
| 6111007507 | 8.44 | 9.55 | 5-10% | 6958 | Ventura | 13.5 | 76.9 | 9.6 | 8.7 | 76.9 | 1.3 | 0.2 | 9.7 | 3.2 |
| 6085510600 | 8.44 | 9.53 | 5-10% | 6139 | Santa Clara | 11.6 | 73.2 | 15.2 | 10.3 | 56.2 | 1.5 | 0.2 | 28.7 | 3.2 |
| 6037460100 | 8.43 | 9.52 | 5-10% | 5793 | Los Angeles | 9.9 | 71.4 | 18.7 | 12.1 | 64.7 | 12.7 | 0.2 | 6.2 | 4.1 |
| 6073017019 | 8.43 | 9.51 | 5-10% | 5883 | San Diego | 5.8 | 50 | 44.2 | 5.4 | 85.9 | 1.2 | 0.3 | 5.1 | 2.2 |
| 6073017110 | 8.43 | 9.50 | 5-10% | 10622 | San Diego | 17.4 | 74.4 | 8.2 | 14.6 | 72.7 | 1.4 | 0.3 | 7.1 | 3.9 |
| 6073016811 | 8.42 | 9.48 | 5-10% | 4374 | San Diego | 10.8 | 76.1 | 13.1 | 13.9 | 80.4 | 0.8 | 0.5 | 2 | 2.4 |
| 6075030202 | 8.42 | 9.47 | 5-10% | 4313 | San Francisco | 7.4 | 83.1 | 9.5 | 7.9 | 54.1 | 1.9 | 0.1 | 31.3 | 4.6 |
| 6017030504 | 8.42 | 9.46 | 5-10% | 2912 | El Dorado | 8.9 | 79.5 | 11.6 | 9.3 | 86.5 | 0.5 | 0.4 | 2 | 1.3 |
| 6059052428 | 8.41 | 9.45 | 5-10% | 6217 | Orange | 13.5 | 81.6 | 4.9 | 13.5 | 71.1 | 1.2 | 0.2 | 9.6 | 4.4 |
| 6111007510 | 8.41 | 9.43 | 5-10% | 6565 | Ventura | 13.6 | 76.6 | 9.8 | 5.6 | 74.9 | 1.1 | 0 | 15.4 | 2.9 |
| 6061022900 | 8.40 | 9.42 | 5-10% | 5175 | Placer | 18.9 | 77.3 | 3.8 | 14.5 | 64.7 | 2 | 0.4 | 12.8 | 5.6 |
| 6013345102 | 8.39 | 9.41 | 5-10% | 3895 | Contra Costa | 14.2 | 76.8 | 9 | 12.8 | 67.4 | 2.2 | 0.1 | 13.9 | 3.7 |
| 6059075603 | 8.39 | 9.40 | 5-10% | 3790 | Orange | 13.4 | 71.6 | 15 | 18.9 | 70.7 | 0.6 | 0.1 | 7 | 2.5 |
| 6065045116 | 8.38 | 9.38 | 5-10% | 1492 | Riverside | 7.7 | 64.3 | 28 | 16 | 77.1 | 2.3 | 0.1 | 2.7 | 1.7 |
| 6007000901 | 8.37 | 9.37 | 5-10% | 2142 | Butte | 12 | 76.7 | 11.3 | 11.8 | 80.4 | 0.5 | 0.8 | 3.9 | 2.6 |
| 6037460000 | 8.36 | 9.36 | 5-10% | 4851 | Los Angeles | 10.5 | 69.3 | 20.2 | 12.3 | 65.2 | 5.1 | 0 | 13.7 | 3.6 |
| 6061023300 | 8.36 | 9.35 | 5-10% | 4365 | Placer | 22.2 | 74 | 3.8 | 14.9 | 65.7 | 2.4 | 0.4 | 11.8 | 4.7 |
| 6081610304 | 8.36 | 9.33 | 5-10% | 4023 | San Mateo | 12.5 | 73.1 | 14.4 | 10.2 | 54.7 | 2.6 | 0.1 | 28.4 | 4.1 |
| 6085503332 | 8.36 | 9.32 | 5-10% | 5363 | Santa Clara | 7 | 47.1 | 45.9 | 8.7 | 64.3 | 1.1 | 0.1 | 22.9 | 3 |

| | | | | | | | | | | | | | | | |
|---|---|---|---|---|---|---|---|---|---|---|---|---|---|---|---|
| 6059099238 | 8.33 | 9.31 | 5-10% | 4031 | Orange | 10.8 | 68.9 | 20.3 | 8.9 | 70.4 | 0.5 | 0.3 | 16.9 | 2.9 |
| 6079013000 | 8.33 | 9.29 | 5-10% | 2539 | San Luis Obispo | 9.2 | 73.4 | 17.4 | 21.5 | 73.2 | 0.2 | 0.5 | 3.4 | 1.3 |
| 6007000904 | 8.32 | 9.28 | 5-10% | 6071 | Butte | 9.8 | 69.2 | 21 | 11.2 | 80.3 | 1.4 | 0.8 | 3.9 | 2.4 |
| 6061021043 | 8.32 | 9.27 | 5-10% | 3355 | Placer | 13 | 80.1 | 6.9 | 9.5 | 77.3 | 2.3 | 0.1 | 7 | 3.8 |
| 6085510803 | 8.31 | 9.26 | 5-10% | 2558 | Santa Clara | 12.7 | 69.2 | 18.1 | 5.9 | 52.1 | 1.1 | 0.1 | 36.4 | 4.6 |
| 6073015602 | 8.30 | 9.24 | 5-10% | 2536 | San Diego | 8.3 | 74.9 | 16.8 | 14.2 | 77.8 | 1.4 | 0.8 | 2.2 | 3.5 |
| 6073015405 | 8.30 | 9.23 | 5-10% | 5765 | San Diego | 10.7 | 74.5 | 14.8 | 15.3 | 77.1 | 1.4 | 0.3 | 2.7 | 3.2 |
| 6059075607 | 8.30 | 9.22 | 5-10% | 6065 | Orange | 10.8 | 81.1 | 8.1 | 11.7 | 53.8 | 2 | 0.1 | 28.6 | 3.8 |
| 6037670326 | 8.30 | 9.21 | 5-10% | 3807 | Los Angeles | 8.5 | 64.7 | 26.8 | 4.9 | 68 | 1.7 | 0.1 | 22.5 | 2.9 |
| 6087120500 | 8.29 | 9.19 | 5-10% | 5687 | Santa Cruz | 8.8 | 80.5 | 10.7 | 6.9 | 86.5 | 0.4 | 0.3 | 2.8 | 3.1 |
| 6059062638 | 8.28 | 9.18 | 5-10% | 6161 | Orange | 16.1 | 80.3 | 3.6 | 15.7 | 59.1 | 1.4 | 0.1 | 18.6 | 5.1 |
| 6113010511 | 8.27 | 9.17 | 5-10% | 3135 | Yolo | 6.8 | 75.9 | 17.3 | 6.6 | 64.8 | 1.2 | 0.3 | 23.8 | 3.3 |
| 6073020708 | 8.27 | 9.16 | 5-10% | 3437 | San Diego | 11.9 | 75.2 | 12.9 | 20.6 | 64 | 1.7 | 0.2 | 9.9 | 3.6 |
| 6037651302 | 8.26 | 9.14 | 5-10% | 6311 | Los Angeles | 11.2 | 69.1 | 19.7 | 9.6 | 67.5 | 0.8 | 0.2 | 17.7 | 4.2 |
| 6089011403 | 8.25 | 9.13 | 5-10% | 2804 | Shasta | 11.7 | 71.9 | 16.4 | 9 | 80.2 | 0.8 | 1.2 | 4.9 | 3.9 |
| 6085512030 | 8.24 | 9.12 | 5-10% | 3074 | Santa Clara | 12.3 | 76.3 | 11.4 | 23.5 | 53.2 | 2.3 | 0.2 | 16.8 | 4.1 |
| 6075030101 | 8.24 | 9.11 | 5-10% | 4233 | San Francisco | 6.8 | 86.2 | 7 | 7.8 | 62.9 | 2 | 0.2 | 22.2 | 4.8 |
| 6059062634 | 8.23 | 9.09 | 5-10% | 5466 | Orange | 14.5 | 79.9 | 5.6 | 12.6 | 67.6 | 1.9 | 0.2 | 13.6 | 4 |
| 6081612500 | 8.23 | 9.08 | 5-10% | 4153 | San Mateo | 12.1 | 74.3 | 13.6 | 7.3 | 74.5 | 1.7 | 0.1 | 12.1 | 4.2 |
| 6001404700 | 8.22 | 9.07 | 5-10% | 1954 | Alameda | 12.9 | 71.6 | 15.5 | 6 | 71.4 | 8 | 0.3 | 9.4 | 4.9 |
| 6037670701 | 8.21 | 9.06 | 5-10% | 6882 | Los Angeles | 10.2 | 67.9 | 21.9 | 18.5 | 57.4 | 4.8 | 0.1 | 15.8 | 3.4 |
| 6073008512 | 8.21 | 9.04 | 5-10% | 4193 | San Diego | 10.2 | 69.8 | 20 | 12.8 | 74.6 | 1.6 | 0.5 | 7.1 | 3.3 |
| 6111005901 | 8.21 | 9.03 | 5-10% | 6716 | Ventura | 11 | 76.3 | 12.7 | 11.2 | 79.8 | 1 | 0.2 | 4.6 | 3.3 |
| 6073017801 | 8.20 | 9.02 | 5-10% | 6539 | San Diego | 9.3 | 77.6 | 13.1 | 15.9 | 76.1 | 1 | 0.4 | 4.2 | 2.4 |
| 6081612600 | 8.20 | 9.00 | 5-10% | 4156 | San Mateo | 11.1 | 73.2 | 15.7 | 6.7 | 76.3 | 0.6 | 0.1 | 12.5 | 3.8 |
| 6071002011 | 8.20 | 8.99 | 5-10% | 4006 | San Bernardino | 9.3 | 77 | 13.7 | 22.6 | 66.5 | 3.2 | 0.4 | 4.6 | 2.6 |
| 6067008513 | 8.19 | 8.98 | 5-10% | 2793 | Sacramento | 22 | 73.8 | 4.2 | 10.5 | 56.2 | 2 | 0.3 | 25.6 | 5.4 |
| 6041108200 | 8.19 | 8.97 | 5-10% | 6836 | Marin | 10.3 | 61.1 | 28.6 | 19.4 | 65.9 | 2.2 | 0.1 | 9.5 | 2.9 |
| 6073017056 | 8.19 | 8.95 | 5-10% | 4144 | San Diego | 13.7 | 79.3 | 7 | 10.7 | 56.7 | 3.7 | 0.2 | 23.1 | 5.6 |
| 6059032049 | 8.18 | 8.94 | 5-10% | 9368 | Orange | 16 | 80.4 | 3.6 | 13 | 68.3 | 1.6 | 0.2 | 12.9 | 4 |
| 6083001304 | 8.18 | 8.93 | 5-10% | 7522 | Santa Barbara | 9.3 | 75 | 15.7 | 25.6 | 66.8 | 0.9 | 0.2 | 4.1 | 2.4 |
| 6001428302 | 8.17 | 8.92 | 5-10% | 7074 | Alameda | 10.9 | 72.8 | 16.3 | 5.4 | 44.2 | 2.4 | 0.1 | 43.4 | 4.5 |
| 6097151306 | 8.17 | 8.90 | 5-10% | 3636 | Sonoma | 11.9 | 75.3 | 12.8 | 19.3 | 69.1 | 2.1 | 0.7 | 4.6 | 4.2 |
| 6073017010 | 8.17 | 8.89 | 5-10% | 3152 | San Diego | 12.8 | 78.1 | 9.1 | 15 | 72.7 | 1 | 0.4 | 8 | 2.9 |
| 6081603100 | 8.16 | 8.88 | 5-10% | 3275 | San Mateo | 12.2 | 76.6 | 11.2 | 13.3 | 68.8 | 0.8 | 0.2 | 11.8 | 5.2 |
| 6073017601 | 8.16 | 8.87 | 5-10% | 4941 | San Diego | 9.5 | 58.4 | 32.1 | 6.5 | 86.8 | 0.7 | 0.1 | 3.6 | 2.2 |
| 6001451102 | 8.16 | 8.85 | 5-10% | 4011 | Alameda | 12.8 | 74.9 | 12.3 | 9.1 | 77.2 | 0.9 | 0.3 | 9.2 | 3.4 |
| 6097154302 | 8.15 | 8.84 | 5-10% | 3747 | Sonoma | 7.2 | 74 | 18.8 | 8.3 | 85.4 | 0.4 | 0.6 | 2.2 | 3.1 |
| 6037800102 | 8.15 | 8.83 | 5-10% | 7078 | Los Angeles | 11.3 | 76.9 | 11.8 | 6.4 | 85 | 1.4 | 0.4 | 3.7 | 3.2 |
| 6059099514 | 8.15 | 8.82 | 5-10% | 5453 | Orange | 8.1 | 64.6 | 27.3 | 7.4 | 76.6 | 0.2 | 0.1 | 12.5 | 3.2 |
| 6061021037 | 8.14 | 8.80 | 5-10% | 2135 | Placer | 11.8 | 67.2 | 21 | 13.4 | 73.2 | 2 | 0.5 | 7.4 | 3.5 |
| 6085502903 | 8.14 | 8.79 | 5-10% | 5075 | Santa Clara | 13.5 | 67.9 | 18.6 | 16.1 | 69.7 | 1.2 | 0.3 | 9.2 | 3.5 |
| 6001421800 | 8.14 | 8.78 | 5-10% | 2007 | Alameda | 10.8 | 73.1 | 16.1 | 5 | 76.1 | 2.7 | 0.3 | 10.9 | 5 |
| 6061020402 | 8.13 | 8.77 | 5-10% | 3396 | Placer | 9.5 | 69.8 | 20.7 | 7.4 | 87.1 | 0.2 | 0.6 | 1.6 | 3 |
| 6075017000 | 8.13 | 8.75 | 5-10% | 3689 | San Francisco | 5 | 81.7 | 13.3 | 7.7 | 79 | 1.3 | 0.1 | 8.6 | 3.3 |
| 6001420300 | 8.13 | 8.74 | 5-10% | 4571 | Alameda | 12.3 | 75.5 | 12.2 | 9.2 | 43.9 | 3.8 | 0.1 | 37.3 | 5.6 |
| 6081609601 | 8.13 | 8.73 | 5-10% | 2944 | San Mateo | 12 | 71.9 | 16.1 | 7.1 | 72.8 | 1 | 0.2 | 14.8 | 4.2 |
| 6001404101 | 8.12 | 8.71 | 5-10% | 2929 | Alameda | 8 | 78.3 | 13.7 | 9.4 | 67.6 | 6.2 | 0.1 | 11.7 | 5.1 |
| 6079011704 | 8.12 | 8.70 | 5-10% | 3336 | San Luis Obispo | 6.9 | 73.9 | 19.2 | 10.4 | 85 | 0.8 | 0.4 | 1.5 | 1.9 |
| 6037621400 | 8.11 | 8.69 | 5-10% | 4414 | Los Angeles | 11.5 | 76.5 | 12 | 11.1 | 72.9 | 1.2 | 0.4 | 9.1 | 5.3 |
| 6111005801 | 8.11 | 8.68 | 5-10% | 5149 | Ventura | 15.6 | 74.8 | 9.6 | 9.1 | 75.7 | 0.9 | 0.2 | 10.7 | 3.4 |
| 6085507600 | 8.11 | 8.66 | 5-10% | 5563 | Santa Clara | 8.2 | 73.2 | 18.6 | 2.6 | 51.5 | 0.3 | 0.1 | 42.2 | 3.4 |
| 6073018000 | 8.10 | 8.65 | 5-10% | 3711 | San Diego | 5.1 | 80.5 | 14.4 | 11.7 | 80.7 | 1.2 | 0.3 | 3.9 | 2.3 |
| 6017030502 | 8.10 | 8.64 | 5-10% | 2641 | El Dorado | 8.8 | 82 | 9.2 | 7.1 | 89.2 | 0.4 | 0.3 | 1.7 | 1.3 |
| 6097153404 | 8.10 | 8.63 | 5-10% | 4011 | Sonoma | 8.8 | 73.5 | 17.7 | 9.5 | 84.5 | 0.8 | 0.5 | 1.9 | 2.8 |
| 6073008306 | 8.10 | 8.61 | 5-10% | 2997 | San Diego | 9.4 | 64.2 | 26.4 | 6.3 | 79.9 | 0.7 | 0.2 | 8.9 | 3.9 |
| 6073013701 | 8.09 | 8.60 | 5-10% | 2352 | San Diego | 10.1 | 70.2 | 19.7 | 15.9 | 72.6 | 3.6 | 0.2 | 4.8 | 3 |
| 6085507703 | 8.09 | 8.59 | 5-10% | 7706 | Santa Clara | 12.2 | 69.9 | 17.9 | 3.3 | 41.3 | 0.5 | 0.2 | 50.9 | 3.8 |
| 6105000200 | 8.09 | 8.58 | 5-10% | 2281 | Trinity | 8.6 | 71 | 20.4 | 6.8 | 82.4 | 0.1 | 6 | 0.3 | 4.4 |
| 6061020710 | 8.09 | 8.56 | 5-10% | 4387 | Placer | 10.6 | 73.4 | 16 | 10.2 | 80.7 | 0.8 | 0.3 | 4.6 | 3.4 |
| 6037901213 | 8.07 | 8.55 | 5-10% | 3553 | Los Angeles | 9.6 | 78.6 | 11.8 | 14.9 | 68.4 | 7.4 | 0.5 | 5.2 | 3.7 |
| 6037920338 | 8.07 | 8.54 | 5-10% | 5721 | Los Angeles | 16 | 78.1 | 5.9 | 14 | 59.4 | 2.5 | 0.3 | 20.7 | 3.2 |
| 6055201800 | 8.07 | 8.53 | 5-10% | 1806 | Napa | 8.9 | 79.1 | 12 | 18 | 77.6 | 0.5 | 0.9 | 1 | 2 |
| 6085511914 | 8.06 | 8.51 | 5-10% | 5684 | Santa Clara | 11.9 | 69.6 | 18.5 | 7.7 | 65.9 | 1.2 | 0.2 | 20.8 | 4.3 |
| 6075033000 | 8.06 | 8.50 | 5-10% | 7764 | San Francisco | 9 | 74 | 17 | 6.5 | 36.8 | 1 | 0.1 | 52.8 | 2.9 |
| 6039000104 | 8.05 | 8.49 | 5-10% | 4773 | Madera | 9.1 | 65.4 | 25.5 | 13.5 | 79.7 | 0.5 | 2.1 | 1.6 | 2.7 |

| | | | | | | | | | | | | | | |
|---|---|---|---|---|---|---|---|---|---|---|---|---|---|---|
| 6085511905 | 8.05 | 8.48 | 5-10% | 3129 | Santa Clara | 13.3 | 70.6 | 16.1 | 7.1 | 53.9 | 1 | 0.1 | 33.3 | 4.7 |
| 6037800202 | 8.03 | 8.46 | 5-10% | 6319 | Los Angeles | 14.8 | 75 | 10.2 | 5.6 | 81.6 | 1.6 | 0.1 | 8 | 3.1 |
| 6079011600 | 8.02 | 8.45 | 5-10% | 4292 | San Luis Obispo | 7.5 | 67.4 | 25.1 | 5.8 | 89.8 | 0.4 | 0.2 | 2.1 | 1.7 |
| 6065045119 | 8.02 | 8.44 | 5-10% | 2811 | Riverside | 10 | 77.1 | 12.9 | 29.6 | 61.5 | 1.4 | 0.4 | 5 | 2 |
| 6073007903 | 8.01 | 8.42 | 5-10% | 4487 | San Diego | 4.3 | 88.5 | 7.2 | 11.6 | 80.8 | 1 | 0.1 | 3.9 | 2.6 |
| 6059032023 | 8.00 | 8.41 | 5-10% | 13544 | Orange | 20.4 | 70.8 | 8.8 | 12.6 | 78.1 | 0.7 | 0.3 | 5.3 | 3 |
| 6071940100 | 7.99 | 8.40 | 5-10% | 1520 | San Bernardino | 5.9 | 56.1 | 38 | 11.6 | 80.5 | 1 | 3.1 | 0.2 | 3.6 |
| 6089011401 | 7.98 | 8.39 | 5-10% | 3971 | Shasta | 13.1 | 72 | 14.9 | 8.3 | 82.9 | 0.6 | 1.7 | 3.4 | 3.2 |
| 6085509401 | 7.97 | 8.37 | 5-10% | 3212 | Santa Clara | 11.9 | 79.6 | 8.5 | 15.9 | 41.1 | 2.2 | 0.2 | 37.7 | 2.9 |
| 6075012902 | 7.97 | 8.36 | 5-10% | 3376 | San Francisco | 5.1 | 82.5 | 12.4 | 7 | 75 | 1.1 | 0.1 | 13.1 | 3.7 |
| 6037139702 | 7.97 | 8.35 | 5-10% | 6250 | Los Angeles | 12.2 | 64.5 | 23.3 | 4.4 | 85.8 | 1.3 | 0.1 | 4.5 | 4 |
| 6061023200 | 7.97 | 8.34 | 5-10% | 4960 | Placer | 23.4 | 72.8 | 3.8 | 13.2 | 65.2 | 2 | 0.5 | 14.2 | 5 |
| 6111007201 | 7.97 | 8.32 | 5-10% | 3429 | Ventura | 9 | 74.1 | 16.9 | 9.4 | 83.2 | 0.6 | 0.3 | 3.7 | 2.8 |
| 6075030900 | 7.96 | 8.31 | 5-10% | 6581 | San Francisco | 9.9 | 70.7 | 19.4 | 7.3 | 50.5 | 3.8 | 0.2 | 35 | 3.1 |
| 6097150100 | 7.96 | 8.30 | 5-10% | 2322 | Sonoma | 9.1 | 71 | 19.9 | 16.6 | 78.7 | 0.1 | 0.3 | 2 | 2.3 |
| 6057000103 | 7.94 | 8.29 | 5-10% | 7893 | Nevada | 8.9 | 70.4 | 20.7 | 5.8 | 89.8 | 0.3 | 0.7 | 1.2 | 2.3 |
| 6073020810 | 7.94 | 8.27 | 5-10% | 5266 | San Diego | 12.3 | 79.1 | 8.6 | 12.1 | 82.7 | 0.7 | 0.5 | 1.4 | 2.6 |
| 6089010807 | 7.93 | 8.26 | 5-10% | 4362 | Shasta | 10.3 | 68.9 | 20.8 | 6.1 | 87.6 | 0.3 | 1.3 | 1.9 | 2.9 |
| 6079011902 | 7.92 | 8.25 | 5-10% | 8245 | San Luis Obispo | 12 | 70.9 | 17.1 | 21.7 | 70.1 | 1 | 0.5 | 3.3 | 3.4 |
| 6019005525 | 7.92 | 8.24 | 5-10% | 1244 | Fresno | 11.4 | 74.6 | 14 | 15.8 | 71 | 1.4 | 1 | 8 | 2.9 |
| 6059062644 | 7.91 | 8.22 | 5-10% | 8249 | Orange | 12.2 | 74.5 | 13.3 | 6.3 | 82.5 | 0.8 | 0.1 | 7.8 | 2.6 |
| 6037651401 | 7.90 | 8.21 | 5-10% | 2614 | Los Angeles | 9.8 | 67.5 | 22.7 | 9.6 | 60.5 | 1.8 | 0.2 | 24.3 | 3.6 |
| 6097151800 | 7.88 | 8.20 | 5-10% | 5219 | Sonoma | 11.1 | 74.5 | 14.4 | 12 | 79.2 | 1.2 | 0.9 | 3.3 | 3.4 |
| 6059042324 | 7.88 | 8.19 | 5-10% | 4241 | Orange | 5.3 | 64 | 30.7 | 7.1 | 84.4 | 0.9 | 0.4 | 5.3 | 2 |
| 6081609500 | 7.88 | 8.17 | 5-10% | 4829 | San Mateo | 14.5 | 71.6 | 13.9 | 11 | 69.7 | 0.4 | 0.1 | 14.3 | 4.6 |
| 6037261102 | 7.88 | 8.16 | 5-10% | 4362 | Los Angeles | 12 | 67 | 21 | 4.3 | 83.4 | 2 | 0 | 6.2 | 4 |
| 6073017052 | 7.88 | 8.15 | 5-10% | 4796 | San Diego | 10.4 | 73.7 | 15.9 | 9.3 | 57.7 | 1.8 | 0.2 | 27.5 | 3.6 |
| 6037574602 | 7.87 | 8.13 | 5-10% | 1277 | Los Angeles | 6.6 | 57.2 | 36.2 | 8 | 67 | 4.5 | 0.4 | 17.2 | 3 |
| 6013360102 | 7.86 | 8.12 | 5-10% | 4326 | Contra Costa | 9 | 75.7 | 15.3 | 15.3 | 37.4 | 12.9 | 0.4 | 28.8 | 5.1 |
| 6075030201 | 7.85 | 8.11 | 5-10% | 3928 | San Francisco | 7.1 | 80.7 | 12.2 | 7.3 | 52.7 | 1 | 0.1 | 34.5 | 4.2 |
| 6073017811 | 7.85 | 8.10 | 5-10% | 6355 | San Diego | 13 | 72.8 | 14.2 | 8.5 | 77.7 | 0.8 | 0.1 | 9.7 | 3.2 |
| 6059075605 | 7.84 | 8.08 | 5-10% | 5776 | Orange | 11.9 | 75.5 | 12.6 | 11.3 | 67.7 | 0.8 | 0.1 | 16.9 | 3.3 |
| 6073013410 | 7.84 | 8.07 | 5-10% | 7073 | San Diego | 15.3 | 74.5 | 10.2 | 41 | 31.6 | 3.9 | 0.2 | 19.2 | 4.1 |
| 6089011802 | 7.84 | 8.06 | 5-10% | 2442 | Shasta | 7.9 | 73.7 | 18.4 | 5.3 | 90.2 | 0.2 | 1.1 | 1.2 | 2.1 |
| 6081608013 | 7.83 | 8.05 | 5-10% | 4049 | San Mateo | 14.1 | 77.7 | 8.2 | 6 | 41.5 | 2.7 | 0 | 44.7 | 5 |
| 6037143901 | 7.81 | 8.03 | 5-10% | 4068 | Los Angeles | 12.6 | 71.4 | 16 | 6 | 83 | 1.6 | 0 | 5.9 | 3.5 |
| 6073008101 | 7.80 | 8.02 | 5-10% | 4009 | San Diego | 6.9 | 77.7 | 15.4 | 9.6 | 82.9 | 0.7 | 0.1 | 4 | 2.6 |
| 6083001906 | 7.79 | 8.01 | 5-10% | 5870 | Santa Barbara | 9.6 | 71.1 | 19.3 | 16.8 | 77.3 | 0.3 | 2.7 | 1.1 | 1.9 |
| 6065044928 | 7.79 | 8.00 | 5-10% | 3443 | Riverside | 4.5 | 44.8 | 50.7 | 7.8 | 88.1 | 0.6 | 0.2 | 2.1 | 1.2 |
| 6083001706 | 7.79 | 7.98 | 5-10% | 4693 | Santa Barbara | 8.5 | 71.6 | 19.9 | 21.8 | 73.6 | 0.5 | 0.2 | 2.1 | 1.7 |
| 6057001204 | 7.78 | 7.97 | 5-10% | 2832 | Nevada | 12 | 79.3 | 8.7 | 7.5 | 87.4 | 0.5 | 0.4 | 2.2 | 2.1 |
| 6061020605 | 7.78 | 7.96 | 5-10% | 5826 | Placer | 10.8 | 76.2 | 13 | 6 | 81.8 | 0.8 | 0.4 | 7.7 | 3.3 |
| 6073008356 | 7.78 | 7.95 | 5-10% | 3629 | San Diego | 12.1 | 77.9 | 10 | 9.8 | 36.2 | 3.6 | 0.4 | 45.6 | 4.4 |
| 6085510900 | 7.78 | 7.93 | 5-10% | 5354 | Santa Clara | 13 | 72.6 | 14.4 | 7 | 58.1 | 1.6 | 0.1 | 28.8 | 4.4 |
| 6037460502 | 7.78 | 7.92 | 5-10% | 4417 | Los Angeles | 11.9 | 74.8 | 13.3 | 6.3 | 61.5 | 0.4 | 0 | 28.5 | 3.3 |
| 6013334006 | 7.77 | 7.91 | 5-10% | 4767 | Contra Costa | 11.7 | 76.1 | 12.2 | 12 | 60 | 1.7 | 0.4 | 20.1 | 5.9 |
| 6059063009 | 7.77 | 7.90 | 5-10% | 1674 | Orange | 12 | 66 | 22 | 6.4 | 82.7 | 0.4 | 0.7 | 8 | 1.8 |
| 6097151601 | 7.76 | 7.88 | 5-10% | 2901 | Sonoma | 1.6 | 33.9 | 64.5 | 5.8 | 90.7 | 0.6 | 0.6 | 1.8 | 0.6 |
| 6083002926 | 7.76 | 7.87 | 5-10% | 5328 | Santa Barbara | 2.1 | 93.9 | 4 | 27.4 | 55.3 | 1.7 | 0.2 | 11.2 | 4.1 |
| 6037701201 | 7.76 | 7.86 | 5-10% | 4433 | Los Angeles | 13.4 | 68 | 18.6 | 3.5 | 85.5 | 0.7 | 0 | 7.9 | 2.5 |
| 6079011701 | 7.76 | 7.84 | 5-10% | 4301 | San Luis Obispo | 6.6 | 62.2 | 31.2 | 8.5 | 85 | 0.5 | 0.4 | 3.6 | 2.1 |
| 6007000103 | 7.76 | 7.83 | 5-10% | 3902 | Butte | 16.8 | 77 | 6.2 | 16.5 | 74.2 | 1.1 | 0.8 | 3.6 | 3.8 |
| 6001404000 | 7.75 | 7.82 | 5-10% | 2819 | Alameda | 6.4 | 85 | 8.6 | 10.8 | 57.3 | 14.2 | 0.2 | 11.6 | 5.8 |
| 6111007609 | 7.74 | 7.81 | 5-10% | 2590 | Ventura | 10.9 | 83.7 | 5.4 | 12.9 | 75.7 | 1.5 | 0.2 | 6.1 | 3.6 |
| 6059099217 | 7.74 | 7.79 | 5-10% | 2354 | Orange | 9.6 | 70.9 | 19.5 | 8.5 | 79.3 | 1 | 0.1 | 8.5 | 2.5 |
| 6083002924 | 7.73 | 7.78 | 5-10% | 5833 | Santa Barbara | 1.1 | 98.7 | 0.2 | 19.9 | 61 | 1.5 | 0.2 | 12.9 | 4.5 |
| 6037621104 | 7.73 | 7.77 | 5-10% | 6649 | Los Angeles | 8.1 | 86.1 | 5.8 | 8.9 | 80.3 | 1.6 | 0.2 | 6.2 | 2.9 |
| 6037430501 | 7.72 | 7.76 | 5-10% | 4172 | Los Angeles | 10.3 | 72.5 | 17.2 | 13.9 | 74 | 1.4 | 0.2 | 7.7 | 2.8 |
| 6081606900 | 7.72 | 7.74 | 5-10% | 2470 | San Mateo | 12 | 69.3 | 18.7 | 9.4 | 58.8 | 1.9 | 0.4 | 23.1 | 6.5 |
| 6073020016 | 7.71 | 7.73 | 5-10% | 9314 | San Diego | 14.1 | 75.3 | 10.6 | 8.1 | 82 | 0.4 | 0.1 | 6.5 | 2.8 |
| 6073018801 | 7.71 | 7.72 | 5-10% | 3614 | San Diego | 9 | 69 | 22 | 18.9 | 75.3 | 0.7 | 0.4 | 2.2 | 2.4 |
| 6073016609 | 7.69 | 7.71 | 5-10% | 5227 | San Diego | 13.5 | 79.2 | 7.3 | 14.3 | 77.8 | 1.2 | 0.6 | 2.3 | 3.8 |
| 6059042112 | 7.69 | 7.69 | 5-10% | 6858 | Orange | 16 | 75.4 | 8.6 | 13 | 77.3 | 0.7 | 0.2 | 5.3 | 3.6 |
| 6073017042 | 7.68 | 7.68 | 5-10% | 7869 | San Diego | 17.8 | 78 | 4.2 | 8.2 | 52 | 2.1 | 0.2 | 32.7 | 4.8 |
| 6097150204 | 7.66 | 7.67 | 5-10% | 3678 | Sonoma | 8.7 | 67.7 | 23.6 | 14.4 | 80.4 | 0.3 | 0.3 | 3 | 1.6 |
| 6073021204 | 7.65 | 7.66 | 5-10% | 5239 | San Diego | 8.7 | 76.5 | 14.8 | 11.3 | 83.3 | 0.8 | 0.8 | 2 | 1.8 |

| | | | | | | | | | | | | | | | |
|---|---|---|---|---|---|---|---|---|---|---|---|---|---|---|---|
| 6059032030 | 7.65 | 7.64 | 5-10% | 3819 | Orange | 10.3 | 77.1 | 12.6 | 21.7 | 64.8 | 1.2 | 0.3 | 8.9 | 3.1 |
| 6073008501 | 7.64 | 7.63 | 5-10% | 5271 | San Diego | 11.3 | 75 | 13.7 | 16.7 | 72.9 | 1.2 | 0.5 | 5.3 | 3.5 |
| 6111007508 | 7.63 | 7.62 | 5-10% | 3722 | Ventura | 12.2 | 74.6 | 13.2 | 17.7 | 71.8 | 1.5 | 0.2 | 6.7 | 2.2 |
| 6037400404 | 7.62 | 7.60 | 5-10% | 4453 | Los Angeles | 8.7 | 72.8 | 18.5 | 15.1 | 75.2 | 0.8 | 0.1 | 6.6 | 2.2 |
| 6073017029 | 7.62 | 7.59 | 5-10% | 8823 | San Diego | 14.6 | 71.3 | 14.1 | 7 | 76.1 | 1.1 | 0.2 | 11.9 | 3.8 |
| 6061023000 | 7.62 | 7.58 | 5-10% | 3191 | Placer | 19.7 | 75.7 | 4.6 | 11.8 | 70.9 | 1.3 | 0.3 | 10.5 | 5.3 |
| 6065045125 | 7.61 | 7.57 | 5-10% | 3017 | Riverside | 4.7 | 49.2 | 46.1 | 9.5 | 87.5 | 0.4 | 0.1 | 1.4 | 1.1 |
| 6037464200 | 7.61 | 7.55 | 5-10% | 5937 | Los Angeles | 10.2 | 72.6 | 17.2 | 4.9 | 28.3 | 0.1 | 0 | 64.1 | 2.5 |
| 6075032700 | 7.61 | 7.54 | 5-10% | 6572 | San Francisco | 8.3 | 75.3 | 16.4 | 5.1 | 34.4 | 1 | 0.1 | 55.8 | 3.6 |
| 6073013416 | 7.59 | 7.53 | 5-10% | 3780 | San Diego | 14.1 | 72.8 | 13.1 | 39.3 | 40.3 | 4.7 | 0.3 | 11.6 | 3.7 |
| 6065940600 | 7.57 | 7.52 | 5-10% | 3026 | Riverside | 4.7 | 46.9 | 48.4 | 9 | 84.2 | 0.9 | 0.8 | 3.2 | 1.9 |
| 6041121200 | 7.57 | 7.50 | 5-10% | 5601 | Marin | 12.6 | 72.2 | 15.2 | 9.2 | 75.8 | 2.1 | 0.2 | 8 | 4.7 |
| 6073020014 | 7.56 | 7.49 | 5-10% | 7006 | San Diego | 12.3 | 72.5 | 15.2 | 9.1 | 78.7 | 1.7 | 0.3 | 7.3 | 2.9 |
| 6037620400 | 7.56 | 7.48 | 5-10% | 5090 | Los Angeles | 12.6 | 71.6 | 15.8 | 8.4 | 73.9 | 1.1 | 0.2 | 11.7 | 4.7 |
| 6085506202 | 7.55 | 7.47 | 5-10% | 6959 | Santa Clara | 13.7 | 70.1 | 16.2 | 8.4 | 48 | 1.7 | 0.2 | 37.8 | 3.9 |
| 6073008346 | 7.55 | 7.45 | 5-10% | 4615 | San Diego | 12.9 | 78.6 | 8.5 | 7.9 | 44.6 | 1.5 | 0.1 | 41.8 | 4.1 |
| 6037910813 | 7.54 | 7.44 | 5-10% | 3535 | Los Angeles | 8.7 | 77.9 | 13.4 | 18.7 | 75.2 | 1.5 | 0.7 | 1.8 | 2.1 |
| 6059032034 | 7.52 | 7.43 | 5-10% | 5898 | Orange | 11 | 82.9 | 6.1 | 9.2 | 75.2 | 1.3 | 0.3 | 10.1 | 3.9 |
| 6085503312 | 7.52 | 7.42 | 5-10% | 3365 | Santa Clara | 11.7 | 76.8 | 11.5 | 37.6 | 27.3 | 4.4 | 0.3 | 27.1 | 3.4 |
| 6081607100 | 7.51 | 7.40 | 5-10% | 2879 | San Mateo | 12.4 | 69.2 | 18.4 | 8.4 | 67.4 | 1.4 | 0.1 | 18.4 | 4.3 |
| 6041131100 | 7.51 | 7.39 | 5-10% | 1038 | Marin | 9.2 | 75.5 | 15.3 | 6.6 | 84.9 | 1 | 0 | 3.9 | 3.7 |
| 6013345105 | 7.51 | 7.38 | 5-10% | 6223 | Contra Costa | 13.4 | 73.9 | 12.7 | 8.8 | 77.2 | 0.7 | 0.1 | 9.2 | 3.9 |
| 6113010605 | 7.50 | 7.37 | 5-10% | 3559 | Yolo | 13.9 | 80.9 | 5.2 | 11.7 | 54.6 | 1.9 | 0.3 | 25.7 | 5.7 |
| 6017031503 | 7.49 | 7.35 | 5-10% | 2810 | El Dorado | 8.3 | 72.6 | 19.1 | 7.4 | 87.8 | 0.1 | 0.9 | 1.5 | 2.3 |
| 6041102202 | 7.47 | 7.34 | 5-10% | 5885 | Marin | 12.1 | 72.4 | 15.5 | 19 | 68.5 | 2.1 | 0.3 | 7.1 | 3 |
| 6097150500 | 7.46 | 7.33 | 5-10% | 5283 | Sonoma | 6.8 | 76 | 17.2 | 11.7 | 81.9 | 1.1 | 0.2 | 2.7 | 2.4 |
| 6081605500 | 7.46 | 7.31 | 5-10% | 4914 | San Mateo | 9.5 | 77.2 | 13.3 | 15.2 | 61.6 | 1.7 | 0.2 | 16.8 | 4.5 |
| 6059021830 | 7.45 | 7.30 | 5-10% | 5862 | Orange | 9.5 | 80.1 | 10.4 | 11.9 | 69.4 | 0.8 | 0.2 | 14.4 | 3.3 |
| 6035040500 | 7.42 | 7.29 | 5-10% | 3213 | Lassen | 11.7 | 75.1 | 13.2 | 8 | 86.9 | 0.5 | 1.6 | 0.8 | 2.3 |
| 6037262200 | 7.41 | 7.28 | 5-10% | 4675 | Los Angeles | 10.6 | 68.5 | 20.9 | 4.7 | 79.6 | 2 | 0 | 9.6 | 4.1 |
| 6075042800 | 7.39 | 7.26 | 5-10% | 2376 | San Francisco | 12.6 | 67 | 20.4 | 3.3 | 71.9 | 0.7 | 0.1 | 19.8 | 4.2 |
| 6001430400 | 7.39 | 7.25 | 5-10% | 2046 | Alameda | 9.5 | 70.6 | 19.9 | 11.6 | 65.6 | 2.8 | 0.1 | 14.5 | 5.3 |
| 6037650702 | 7.38 | 7.24 | 5-10% | 4590 | Los Angeles | 11.7 | 73.8 | 14.5 | 11.9 | 60.3 | 0.5 | 0.1 | 22.5 | 4.7 |
| 6041123000 | 7.36 | 7.23 | 5-10% | 2074 | Marin | 12.3 | 56 | 31.7 | 3.5 | 90.9 | 0.1 | 0 | 3.1 | 2.4 |
| 6073002001 | 7.35 | 7.21 | 5-10% | 3354 | San Diego | 9.3 | 70.2 | 20.5 | 9.8 | 82.4 | 1.6 | 0.3 | 3.4 | 2.6 |
| 6073017036 | 7.35 | 7.20 | 5-10% | 3276 | San Diego | 12.4 | 78.9 | 8.7 | 11.1 | 56.1 | 3.2 | 0.4 | 22.8 | 6.3 |
| 6019005518 | 7.35 | 7.19 | 5-10% | 2753 | Fresno | 20.4 | 72.3 | 7.3 | 17.3 | 65 | 2.5 | 0.7 | 11.5 | 3 |
| 6037463300 | 7.35 | 7.18 | 5-10% | 2041 | Los Angeles | 11.2 | 74.9 | 13.9 | 17.7 | 54.6 | 2.8 | 0 | 21.4 | 3.4 |
| 6019005503 | 7.35 | 7.16 | 5-10% | 4254 | Fresno | 10.1 | 71.7 | 18.2 | 13.5 | 69.6 | 2 | 0.3 | 12.2 | 2.4 |
| 6085507401 | 7.34 | 7.15 | 5-10% | 5624 | Santa Clara | 10.4 | 70.3 | 19.3 | 2.4 | 39.6 | 0.2 | 0.1 | 54.8 | 2.9 |
| 6075013000 | 7.33 | 7.14 | 5-10% | 4044 | San Francisco | 5.5 | 82.1 | 12.4 | 5.6 | 80.9 | 0.6 | 0.1 | 10.3 | 2.5 |
| 6059062645 | 7.32 | 7.13 | 5-10% | 6084 | Orange | 10.5 | 74.3 | 15.2 | 5.2 | 76.6 | 0.5 | 0.1 | 14 | 3.7 |
| 6053010701 | 7.30 | 7.11 | 5-10% | 6769 | Monterey | 13 | 73.8 | 13.2 | 12.5 | 74.4 | 1.2 | 0.3 | 7.8 | 3.7 |
| 6013355115 | 7.30 | 7.10 | 5-10% | 4443 | Contra Costa | 18.9 | 77.3 | 3.8 | 10.9 | 32.7 | 9.6 | 0.3 | 40.4 | 6.2 |
| 6111007402 | 7.29 | 7.09 | 5-10% | 6305 | Ventura | 7.7 | 74.2 | 18.1 | 5.8 | 83.6 | 1.1 | 0 | 7.5 | 2 |
| 6017030801 | 7.29 | 7.08 | 5-10% | 4011 | El Dorado | 10.3 | 74.8 | 14.9 | 8.8 | 84.7 | 0.4 | 0.8 | 2.4 | 2.9 |
| 6079010504 | 7.29 | 7.06 | 5-10% | 2592 | San Luis Obispo | 7.3 | 67.5 | 25.2 | 8 | 86.8 | 0.2 | 0.3 | 2.2 | 2.4 |
| 6073017109 | 7.28 | 7.05 | 5-10% | 6650 | San Diego | 15.1 | 80.4 | 4.5 | 9.6 | 78.6 | 0.6 | 0.1 | 6.8 | 4.2 |
| 6013338203 | 7.28 | 7.04 | 5-10% | 4564 | Contra Costa | 8.5 | 83 | 8.5 | 9.5 | 64.9 | 2.9 | 0.2 | 17.8 | 4.6 |
| 6085511909 | 7.27 | 7.02 | 5-10% | 7997 | Santa Clara | 11.8 | 75.9 | 12.3 | 4.6 | 49.3 | 0.3 | 0.2 | 40.9 | 4.6 |
| 6085506803 | 7.27 | 7.01 | 5-10% | 6883 | Santa Clara | 14.7 | 73.4 | 11.9 | 19.2 | 62.2 | 1 | 0.1 | 13.4 | 4.1 |
| 6079010101 | 7.27 | 7.00 | 5-10% | 1843 | San Luis Obispo | 9.2 | 73.7 | 17.1 | 15.1 | 80.2 | 1.3 | 0.4 | 1.1 | 1.8 |
| 6061020602 | 7.27 | 6.99 | 5-10% | 6970 | Placer | 9.5 | 73.2 | 17.3 | 7.3 | 85.4 | 0.6 | 0.7 | 3.2 | 2.7 |
| 6083001208 | 7.26 | 6.97 | 5-10% | 4096 | Santa Barbara | 8.7 | 76.2 | 15.1 | 16.5 | 73.3 | 1.1 | 0.4 | 5.7 | 3 |
| 6037670411 | 7.25 | 6.96 | 5-10% | 4427 | Los Angeles | 12.2 | 66.1 | 21.7 | 6.8 | 58.1 | 1.1 | 0.1 | 29.2 | 4.7 |
| 6073008347 | 7.24 | 6.95 | 5-10% | 6358 | San Diego | 12 | 78.4 | 9.6 | 12 | 36.2 | 2.7 | 0.1 | 43.9 | 5 |
| 6059042331 | 7.24 | 6.94 | 5-10% | 5215 | Orange | 10.5 | 79 | 10.5 | 18.5 | 69.1 | 0.8 | 0.3 | 7.4 | 3.9 |
| 6073008366 | 7.23 | 6.92 | 5-10% | 5881 | San Diego | 13.6 | 81.1 | 5.3 | 7.3 | 48.6 | 1.4 | 0.1 | 38.7 | 3.8 |
| 6073009504 | 7.23 | 6.91 | 5-10% | 5914 | San Diego | 15.6 | 77.7 | 6.7 | 7.4 | 64.4 | 2.6 | 0.2 | 21.5 | 3.9 |
| 6081611200 | 7.20 | 6.90 | 5-10% | 3005 | San Mateo | 14.5 | 70.1 | 15.4 | 21.5 | 68.1 | 1 | 0.2 | 6.7 | 2.5 |
| 6013390100 | 7.19 | 6.89 | 5-10% | 2229 | Contra Costa | 11.6 | 67.2 | 21.2 | 5.6 | 64.7 | 4.2 | 0.1 | 19.5 | 5.8 |
| 6111006200 | 7.19 | 6.87 | 5-10% | 3003 | Ventura | 7.5 | 73.1 | 19.4 | 5.1 | 84.2 | 0.7 | 0.1 | 7.1 | 2.8 |
| 6073009104 | 7.18 | 6.86 | 5-10% | 2775 | San Diego | 10.3 | 69.1 | 20.6 | 12 | 81.3 | 0.5 | 0.1 | 3 | 3 |
| 6065044919 | 7.17 | 6.85 | 5-10% | 4243 | Riverside | 0.8 | 30.3 | 68.9 | 3.5 | 93.8 | 0.7 | 0.2 | 1.1 | 0.7 |
| 6037194200 | 7.16 | 6.84 | 5-10% | 3588 | Los Angeles | 9.2 | 78.7 | 12.1 | 6.7 | 83.9 | 1.9 | 0.1 | 3.9 | 3.4 |
| 6059042317 | 7.15 | 6.82 | 5-10% | 3331 | Orange | 8.8 | 71.1 | 20.1 | 6.9 | 84.4 | 0.7 | 0.4 | 5.5 | 2.1 |

| | | | | | | | | | | | | | | |
|---|---|---|---|---|---|---|---|---|---|---|---|---|---|---|
| 6059042337 | 7.15 | 6.81 | 5-10% | 3639 | Orange | 10 | 78.8 | 11.2 | 9.3 | 78.4 | 1.2 | 0.2 | 7.7 | 3.2 |
| 6059075703 | 7.14 | 6.80 | 5-10% | 4069 | Orange | 11.1 | 68.8 | 20.1 | 10.6 | 76.5 | 0.4 | 0.2 | 10 | 2.3 |
| 6059099237 | 7.14 | 6.79 | 5-10% | 3583 | Orange | 11.1 | 73.9 | 15 | 10.4 | 74.1 | 0.6 | 0.3 | 10.9 | 3.8 |
| 6037460600 | 7.11 | 6.77 | 5-10% | 4511 | Los Angeles | 10.1 | 74.9 | 15 | 5.7 | 71.2 | 0.4 | 0.1 | 19.4 | 3.3 |
| 6081608700 | 7.11 | 6.76 | 5-10% | 6974 | San Mateo | 12.4 | 72.3 | 15.3 | 11.5 | 65.2 | 1.5 | 0.2 | 16.9 | 4.7 |
| 6013338204 | 7.11 | 6.75 | 5-10% | 5662 | Contra Costa | 9.9 | 73.3 | 16.8 | 7.4 | 69.7 | 1.4 | 0.2 | 17.7 | 3.5 |
| 6037430200 | 7.11 | 6.73 | 5-10% | 1292 | Los Angeles | 6.5 | 58.5 | 35 | 17.1 | 58.3 | 1.6 | 0 | 20.9 | 2.1 |
| 6083002906 | 7.11 | 6.72 | 5-10% | 4016 | Santa Barbara | 8.8 | 71.5 | 19.7 | 21.1 | 68.6 | 1.1 | 0.3 | 6.4 | 2.5 |
| 6013338301 | 7.09 | 6.71 | 5-10% | 2922 | Contra Costa | 9.5 | 62.8 | 27.7 | 5.5 | 75.3 | 0.5 | 0.2 | 15.9 | 2.6 |
| 6001450605 | 7.09 | 6.70 | 5-10% | 3685 | Alameda | 13.4 | 71 | 15.6 | 7.2 | 76.5 | 1.1 | 0 | 12.5 | 2.7 |
| 6037262400 | 7.06 | 6.68 | 5-10% | 3233 | Los Angeles | 11.2 | 64.7 | 24.1 | 4 | 85.3 | 1 | 0.1 | 6 | 3.6 |
| 6073017045 | 7.05 | 6.67 | 5-10% | 2790 | San Diego | 14.5 | 79.8 | 5.7 | 6.6 | 60.5 | 1.9 | 0.6 | 25.9 | 4.4 |
| 6097153706 | 7.04 | 6.66 | 5-10% | 4092 | Sonoma | 7.2 | 76.3 | 16.5 | 10.9 | 83.8 | 0.7 | 1 | 1.1 | 2.5 |
| 6081604600 | 7.03 | 6.65 | 5-10% | 2599 | San Mateo | 10.2 | 66.6 | 23.2 | 7.2 | 43.2 | 0.3 | 0 | 45.9 | 3.3 |
| 6037460501 | 7.03 | 6.63 | 5-10% | 5418 | Los Angeles | 9.2 | 72.9 | 17.9 | 5.9 | 62.6 | 0.5 | 0 | 28.2 | 2.9 |
| 6111005910 | 7.02 | 6.62 | 5-10% | 1775 | Ventura | 10.3 | 78.1 | 11.6 | 10 | 81.7 | 1.2 | 0.1 | 4.2 | 2.9 |
| 6061023600 | 7.01 | 6.61 | 5-10% | 4565 | Placer | 0.2 | 30.4 | 69.4 | 4.2 | 90.5 | 0.6 | 0.2 | 4 | 0.5 |
| 6037460700 | 7.01 | 6.60 | 5-10% | 5034 | Los Angeles | 9 | 74 | 17 | 6.7 | 65.5 | 0.7 | 0 | 24.8 | 2.4 |
| 6087120900 | 7.00 | 6.58 | 5-10% | 8360 | Santa Cruz | 12.1 | 77.2 | 10.7 | 11.2 | 78.1 | 1 | 0.3 | 5.2 | 4.1 |
| 6017030710 | 6.99 | 6.57 | 5-10% | 4989 | El Dorado | 11.1 | 76.2 | 12.7 | 6.7 | 80.6 | 1.9 | 0.2 | 7.6 | 3.2 |
| 6081613200 | 6.98 | 6.56 | 5-10% | 6494 | San Mateo | 12.1 | 63.1 | 24.8 | 4.6 | 86.7 | 0.3 | 0.1 | 5.9 | 2.3 |
| 6059042326 | 6.97 | 6.55 | 5-10% | 4608 | Orange | 11.7 | 74.7 | 13.6 | 15.4 | 70.1 | 1.6 | 0.4 | 7.8 | 4.7 |
| 6085511916 | 6.96 | 6.53 | 5-10% | 4669 | Santa Clara | 14.4 | 76.4 | 9.2 | 18.1 | 57.3 | 2.2 | 0.1 | 18.4 | 3.8 |
| 6067009406 | 6.95 | 6.52 | 5-10% | 2390 | Sacramento | 9.9 | 77.1 | 13 | 21.9 | 71.3 | 0.9 | 1 | 2.8 | 2.1 |
| 6085503002 | 6.94 | 6.51 | 5-10% | 3506 | Santa Clara | 13.5 | 67.7 | 18.8 | 22.5 | 60.8 | 1.9 | 0.1 | 10.9 | 3.7 |
| 6037620303 | 6.94 | 6.50 | 5-10% | 4547 | Los Angeles | 16.7 | 70.5 | 12.8 | 6.2 | 82.9 | 0.4 | 0 | 6.4 | 4.1 |
| 6061021038 | 6.93 | 6.48 | 5-10% | 7632 | Placer | 14.8 | 79.2 | 6 | 16.1 | 72.1 | 1.8 | 0.7 | 5.2 | 4.1 |
| 6089010804 | 6.93 | 6.47 | 5-10% | 2745 | Shasta | 9.3 | 70.9 | 19.8 | 7.5 | 83 | 1.2 | 0.8 | 4.3 | 3.2 |
| 6061020502 | 6.92 | 6.46 | 5-10% | 4103 | Placer | 9.8 | 69 | 21.2 | 5.8 | 86.1 | 0.8 | 1.1 | 3.1 | 3.1 |
| 6059063005 | 6.91 | 6.44 | 5-10% | 1365 | Orange | 3.6 | 66.4 | 30 | 4.8 | 86.5 | 1 | 0.1 | 6.5 | 1.2 |
| 6037800332 | 6.90 | 6.43 | 5-10% | 6665 | Los Angeles | 9.9 | 78.5 | 11.6 | 6.1 | 82.9 | 0.5 | 0 | 7.4 | 3 |
| 6081608023 | 6.90 | 6.42 | 5-10% | 2549 | San Mateo | 14.5 | 68.4 | 17.1 | 5.7 | 42.6 | 1.4 | 0.1 | 45.5 | 4.7 |
| 6061021040 | 6.89 | 6.41 | 5-10% | 3493 | Placer | 1.4 | 20.3 | 78.3 | 4.3 | 91.7 | 0.8 | 0.1 | 2.5 | 0.6 |
| 6085507906 | 6.89 | 6.39 | 5-10% | 4460 | Santa Clara | 12.1 | 74.8 | 13.1 | 2.6 | 24.8 | 0.2 | 0.1 | 69.9 | 2.4 |
| 6037800326 | 6.88 | 6.38 | 5-10% | 4972 | Los Angeles | 8.8 | 74.2 | 17 | 7.8 | 82.7 | 0.8 | 0.1 | 6.4 | 2.1 |
| 6111001700 | 6.88 | 6.37 | 5-10% | 3531 | Ventura | 8.7 | 68.4 | 22.9 | 12.5 | 79.5 | 0.7 | 0.5 | 3.8 | 3 |
| 6059099308 | 6.87 | 6.36 | 5-10% | 5847 | Orange | 11 | 71.2 | 17.8 | 7.3 | 70.6 | 0.3 | 0.1 | 18.9 | 2.8 |
| 6073017054 | 6.87 | 6.34 | 5-10% | 5810 | San Diego | 9.9 | 70.9 | 19.2 | 8.8 | 76.4 | 1.5 | 0.2 | 9.4 | 3.7 |
| 6037138000 | 6.87 | 6.33 | 5-10% | 4484 | Los Angeles | 11.2 | 72.5 | 16.3 | 7.8 | 80.4 | 2.4 | 0.2 | 5.8 | 3.5 |
| 6059062639 | 6.86 | 6.32 | 5-10% | 6996 | Orange | 16.8 | 75.4 | 7.8 | 13.2 | 64.5 | 2.1 | 0.2 | 15.2 | 4.9 |
| 6073021304 | 6.86 | 6.31 | 5-10% | 2616 | San Diego | 8 | 78.6 | 13.4 | 25 | 69.2 | 1.6 | 0.3 | 1.3 | 2.5 |
| 6017030601 | 6.84 | 6.29 | 5-10% | 5044 | El Dorado | 9.7 | 73.7 | 16.6 | 6.1 | 89 | 0.3 | 0.7 | 0.9 | 2.9 |
| 6081608300 | 6.84 | 6.28 | 5-10% | 3401 | San Mateo | 14.6 | 73.2 | 12.2 | 6.8 | 39.3 | 1.8 | 0.1 | 48.2 | 3.9 |
| 6041125000 | 6.83 | 6.27 | 5-10% | 4262 | Marin | 13.1 | 69.5 | 17.4 | 6.2 | 75.1 | 2 | 0.2 | 12.4 | 4 |
| 6083002008 | 6.82 | 6.26 | 5-10% | 6451 | Santa Barbara | 12.4 | 72.5 | 15.1 | 29.5 | 62 | 1.3 | 0.4 | 4.1 | 2.7 |
| 6083001402 | 6.80 | 6.24 | 5-10% | 3392 | Santa Barbara | 8.8 | 61.4 | 29.8 | 7.3 | 88.2 | 0.5 | 0.5 | 1.8 | 1.7 |
| 6013345108 | 6.80 | 6.23 | 5-10% | 7353 | Contra Costa | 12.2 | 77.7 | 10.1 | 7.9 | 61.1 | 2.1 | 0.2 | 24.7 | 4.1 |
| 6073002002 | 6.79 | 6.22 | 5-10% | 2559 | San Diego | 11.4 | 77.3 | 11.3 | 16.7 | 70.3 | 5.7 | 0.2 | 4.5 | 2.7 |
| 6073017303 | 6.78 | 6.21 | 5-10% | 3018 | San Diego | 11.3 | 75.5 | 13.2 | 9.4 | 84.7 | 0.3 | 0.2 | 3 | 2.4 |
| 6013355302 | 6.77 | 6.19 | 5-10% | 3484 | Contra Costa | 10.8 | 71.9 | 17.3 | 6.3 | 69.2 | 1.1 | 0.1 | 18.7 | 4.5 |
| 6041130201 | 6.77 | 6.18 | 5-10% | 3191 | Marin | 6 | 70.7 | 23.3 | 4.2 | 87.7 | 0.8 | 0.3 | 4.9 | 2.1 |
| 6061021039 | 6.76 | 6.17 | 5-10% | 1771 | Placer | 0 | 13.5 | 86.5 | 2.5 | 93.8 | 0.3 | 0.5 | 2 | 0.8 |
| 6059062619 | 6.75 | 6.15 | 5-10% | 3885 | Orange | 9 | 72.5 | 18.5 | 5.4 | 87.9 | 0.7 | 0.2 | 2.9 | 3 |
| 6061022300 | 6.74 | 6.14 | 5-10% | 709 | Placer | 7.6 | 77.9 | 14.5 | 3.1 | 93.9 | 0.7 | 0.4 | 1.4 | 0.4 |
| 6073009805 | 6.74 | 6.13 | 5-10% | 4715 | San Diego | 9.8 | 72.5 | 17.7 | 12.7 | 76.4 | 2.7 | 0.3 | 4.6 | 3.3 |
| 6059042338 | 6.73 | 6.12 | 5-10% | 4580 | Orange | 10.5 | 76 | 13.5 | 9.8 | 83.1 | 0.7 | 0.1 | 3.8 | 2.4 |
| 6037800406 | 6.71 | 6.10 | 5-10% | 2644 | Los Angeles | 7.8 | 77.8 | 14.4 | 11.9 | 78.4 | 3.5 | 0.2 | 3.2 | 2.8 |
| 6023010501 | 6.70 | 6.09 | 5-10% | 6635 | Humboldt | 13.3 | 74.3 | 12.4 | 7.8 | 80.6 | 0.7 | 4.4 | 1.6 | 4.9 |
| 6097154304 | 6.70 | 6.08 | 5-10% | 2400 | Sonoma | 7.3 | 73.9 | 18.8 | 12.3 | 79.4 | 0.3 | 3.8 | 1.6 | 2.7 |
| 6073015502 | 6.70 | 6.07 | 5-10% | 2748 | San Diego | 11.2 | 77.9 | 10.9 | 16.1 | 74.3 | 0.7 | 3.9 | 2 | 2.9 |
| 6059052513 | 6.69 | 6.05 | 5-10% | 5675 | Orange | 10.4 | 75.3 | 14.3 | 11.4 | 56.8 | 1.2 | 0.2 | 26.5 | 3.9 |
| 6073008328 | 6.69 | 6.04 | 5-10% | 5162 | San Diego | 16.3 | 76.4 | 7.3 | 7.7 | 64.3 | 0.9 | 0.1 | 23 | 4 |
| 6079011001 | 6.69 | 6.03 | 5-10% | 5314 | San Luis Obispo | 9.1 | 71.8 | 19.1 | 16.2 | 75 | 0.9 | 0.2 | 5.1 | 2.6 |
| 6017030803 | 6.68 | 6.02 | 5-10% | 7241 | El Dorado | 12 | 71.5 | 16.5 | 9 | 84.9 | 0.3 | 0.6 | 2.5 | 2.5 |
| 6073007302 | 6.68 | 6.00 | 5-10% | 2060 | San Diego | 9.7 | 73.6 | 16.7 | 6.8 | 88.9 | 0.3 | 0 | 2.3 | 1.6 |
| 6073015406 | 6.68 | 5.99 | 5-10% | 2492 | San Diego | 8.2 | 74.5 | 17.3 | 10.6 | 81.7 | 1.2 | 0.6 | 2.6 | 3.2 |

| | | | | | | | | | | | | | | | |
|---|---|---|---|---|---|---|---|---|---|---|---|---|---|---|---|
| 6057000401 | 6.66 | 5.98 | 5-10% | 5744 | Nevada | 8.2 | 57.1 | 34.7 | 5.4 | 90.7 | 0.3 | 0.7 | 1.2 | 1.8 |
| 6059042325 | 6.66 | 5.97 | 5-10% | 3375 | Orange | 9.2 | 77.8 | 13 | 8.8 | 76.4 | 1.2 | 0.2 | 8.7 | 4.6 |
| 6085503334 | 6.66 | 5.95 | 5-10% | 8854 | Santa Clara | 18 | 74.7 | 7.3 | 7.3 | 27.3 | 2 | 0 | 59.5 | 3.9 |
| 6085509802 | 6.66 | 5.94 | 5-10% | 2719 | Santa Clara | 16.1 | 70.2 | 13.7 | 10.2 | 60.5 | 1.2 | 0.1 | 23.5 | 4.5 |
| 6061022100 | 6.65 | 5.93 | 5-10% | 961 | Placer | 8.6 | 80.6 | 10.8 | 2.3 | 94.4 | 1 | 0 | 1.2 | 1 |
| 6073007701 | 6.64 | 5.91 | 5-10% | 3703 | San Diego | 3.9 | 84.8 | 11.3 | 10.1 | 82.3 | 0.9 | 0.5 | 3.3 | 2.9 |
| 6075017102 | 6.64 | 5.90 | 5-10% | 3451 | San Francisco | 9.4 | 83.4 | 7.2 | 7 | 75.7 | 3.6 | 0.2 | 9 | 4.4 |
| 6087100900 | 6.62 | 5.89 | 5-10% | 4236 | Santa Cruz | 8.3 | 76.3 | 15.4 | 13.9 | 79 | 1.2 | 0.1 | 3 | 2.7 |
| 6059062633 | 6.62 | 5.88 | 5-10% | 6545 | Orange | 19.4 | 76.9 | 3.7 | 10.3 | 65.4 | 0.9 | 0.1 | 18.3 | 5 |
| 6083002013 | 6.62 | 5.86 | 5-10% | 2737 | Santa Barbara | 8 | 68.5 | 23.5 | 21.1 | 71 | 0.9 | 0.3 | 4.1 | 2.6 |
| 6085509801 | 6.62 | 5.85 | 5-10% | 5274 | Santa Clara | 14 | 73.7 | 12.3 | 13.1 | 57 | 1.3 | 0.2 | 23 | 5.4 |
| 6065044917 | 6.61 | 5.84 | 5-10% | 3911 | Riverside | 2.3 | 40.5 | 57.2 | 4.5 | 91.3 | 0.8 | 0.3 | 2.1 | 0.9 |
| 6073007100 | 6.59 | 5.83 | 5-10% | 5029 | San Diego | 7.1 | 66.9 | 26 | 5.9 | 88.6 | 1 | 0.2 | 2.2 | 2 |
| 6061021901 | 6.59 | 5.81 | 5-10% | 3060 | Placer | 8.2 | 74.9 | 16.9 | 6.1 | 88.2 | 0.8 | 0.8 | 1.9 | 2.4 |
| 6081608001 | 6.58 | 5.80 | 5-10% | 3393 | San Mateo | 13.2 | 74.9 | 11.9 | 7 | 41.9 | 1.4 | 0 | 46.2 | 3.5 |
| 6013348000 | 6.58 | 5.79 | 5-10% | 4587 | Contra Costa | 12.3 | 68.4 | 19.3 | 4.4 | 82.9 | 0.4 | 0.1 | 8.4 | 3.7 |
| 6075021600 | 6.57 | 5.78 | 5-10% | 3836 | San Francisco | 8.6 | 76.3 | 15.1 | 9.7 | 60.4 | 5.6 | 0.2 | 19.6 | 4.5 |
| 6037300100 | 6.56 | 5.76 | 5-10% | 6002 | Los Angeles | 10.1 | 75.6 | 14.3 | 8.6 | 65.1 | 0.6 | 0.1 | 22.7 | 2.9 |
| 6037670702 | 6.55 | 5.75 | 5-10% | 5477 | Los Angeles | 9.7 | 65 | 25.3 | 9.2 | 72.5 | 1.9 | 0.2 | 12.4 | 3.9 |
| 6085506802 | 6.55 | 5.74 | 5-10% | 5237 | Santa Clara | 13.7 | 73.5 | 12.8 | 13.3 | 71.2 | 1.1 | 0.3 | 10.8 | 3.3 |
| 6079010707 | 6.54 | 5.73 | 5-10% | 5751 | San Luis Obispo | 7.6 | 65.7 | 26.7 | 9.7 | 84.2 | 0.4 | 0.2 | 2.9 | 2.6 |
| 6083000700 | 6.51 | 5.71 | 5-10% | 6408 | Santa Barbara | 7.8 | 74.8 | 17.4 | 22.8 | 70.3 | 0.9 | 0.5 | 3.3 | 2.3 |
| 6059021912 | 6.51 | 5.70 | 5-10% | 4828 | Orange | 13.9 | 73.7 | 12.4 | 11.4 | 66.6 | 0.5 | 0.2 | 18.4 | 2.9 |
| 6061021044 | 6.50 | 5.69 | 5-10% | 5719 | Placer | 17 | 77.2 | 5.8 | 12.6 | 71.8 | 2.3 | 0.5 | 8.8 | 4 |
| 6083002928 | 6.50 | 5.68 | 5-10% | 4089 | Santa Barbara | 2.3 | 96.1 | 1.6 | 21.9 | 61.7 | 1.8 | 0.1 | 10.1 | 4.5 |
| 6073007502 | 6.50 | 5.66 | 5-10% | 3227 | San Diego | 4.9 | 90.1 | 5 | 10.8 | 81.2 | 1.6 | 0.5 | 2.6 | 3.3 |
| 6073017051 | 6.49 | 5.65 | 5-10% | 4301 | San Diego | 8.5 | 66.2 | 25.3 | 9.1 | 67.2 | 3.2 | 0.1 | 17.6 | 2.7 |
| 6111001800 | 6.49 | 5.64 | 5-10% | 4302 | Ventura | 9.3 | 69.7 | 21 | 13.6 | 79.1 | 0.6 | 0.3 | 3.4 | 3 |
| 6059062630 | 6.49 | 5.62 | 5-10% | 1722 | Orange | 8.7 | 69.1 | 22.2 | 3.9 | 66.5 | 0.1 | 0 | 26.3 | 3.2 |
| 6059032037 | 6.49 | 5.61 | 5-10% | 4929 | Orange | 5.7 | 44.7 | 49.6 | 6.4 | 82.9 | 1 | 0.2 | 7.1 | 2.4 |
| 6061021128 | 6.48 | 5.60 | 5-10% | 2686 | Placer | 12.5 | 78.4 | 9.1 | 13.1 | 74.6 | 1.3 | 0.6 | 6.6 | 3.9 |
| 6085507301 | 6.47 | 5.59 | 5-10% | 6555 | Santa Clara | 8.9 | 64.9 | 26.2 | 3.6 | 60.9 | 0.2 | 0.1 | 32 | 3.1 |
| 6087101100 | 6.47 | 5.57 | 5-10% | 5444 | Santa Cruz | 8.8 | 80.1 | 11.1 | 12.1 | 77.5 | 2 | 0.4 | 3.8 | 4.2 |
| 6089011900 | 6.47 | 5.56 | 5-10% | 4511 | Shasta | 9 | 70.2 | 20.8 | 5.6 | 89.5 | 0.4 | 1.7 | 0.5 | 2.3 |
| 6001442000 | 6.47 | 5.55 | 5-10% | 3212 | Alameda | 8.3 | 80.1 | 11.6 | 3.6 | 22 | 0.6 | 0 | 69.6 | 4.3 |
| 6037920016 | 6.46 | 5.54 | 5-10% | 4904 | Los Angeles | 15.3 | 78.8 | 5.9 | 18.9 | 63 | 4.4 | 0.2 | 9.8 | 3.8 |
| 6057001203 | 6.41 | 5.52 | 5-10% | 2927 | Nevada | 10.9 | 76.6 | 12.5 | 7.6 | 89 | 0.1 | 0.2 | 1.9 | 1.2 |
| 6001430200 | 6.41 | 5.51 | 5-10% | 6916 | Alameda | 9.2 | 75.7 | 15.1 | 12.5 | 63.9 | 2.7 | 0.2 | 16.4 | 4.3 |
| 6097152600 | 6.40 | 5.50 | 5-10% | 8365 | Sonoma | 9.9 | 72.9 | 17.2 | 7.2 | 84.2 | 0.6 | 0.2 | 5.1 | 2.7 |
| 6037139703 | 6.39 | 5.49 | 5-10% | 2943 | Los Angeles | 10.8 | 71.2 | 18 | 4.4 | 84.2 | 1.7 | 0 | 5.1 | 4.7 |
| 6085507402 | 6.39 | 5.47 | 5-10% | 3881 | Santa Clara | 11.6 | 72.1 | 16.3 | 7.3 | 59.1 | 0.5 | 0 | 29 | 4 |
| 6089010702 | 6.38 | 5.46 | 5-10% | 3896 | Shasta | 12.8 | 70.6 | 16.6 | 6.5 | 85 | 1 | 1 | 3.3 | 3.2 |
| 6073008333 | 6.38 | 5.45 | 5-10% | 13748 | San Diego | 20.1 | 76.1 | 3.8 | 7.2 | 57.1 | 0.9 | 0.1 | 30.5 | 4.2 |
| 6037134421 | 6.38 | 5.44 | 5-10% | 3941 | Los Angeles | 11.6 | 71.3 | 17.1 | 8.4 | 73.6 | 1.7 | 0.1 | 11.8 | 4.4 |
| 6085511200 | 6.37 | 5.42 | 5-10% | 4849 | Santa Clara | 14.2 | 70.9 | 14.9 | 3.8 | 74 | 1.5 | 0.1 | 15.9 | 4.7 |
| 6087120600 | 6.37 | 5.41 | 5-10% | 4733 | Santa Cruz | 9.4 | 81.1 | 9.5 | 8.7 | 85.8 | 0.8 | 0.5 | 1.3 | 2.8 |
| 6073008313 | 6.37 | 5.40 | 5-10% | 2225 | San Diego | 11.3 | 64.8 | 23.9 | 8.7 | 78.3 | 0.4 | 0.2 | 8.6 | 3.9 |
| 6081613400 | 6.36 | 5.39 | 5-10% | 3093 | San Mateo | 10.8 | 69.8 | 19.4 | 5.1 | 88.6 | 0.4 | 0 | 3.8 | 2.2 |
| 6087121100 | 6.36 | 5.37 | 5-10% | 2963 | Santa Cruz | 9.7 | 74.9 | 15.4 | 12.6 | 79.9 | 0.5 | 0.3 | 2.7 | 3.9 |
| 6085511609 | 6.35 | 5.36 | 5-10% | 3183 | Santa Clara | 11.9 | 62 | 26.1 | 4.9 | 62.9 | 1.9 | 0.1 | 27 | 3.3 |
| 6059042323 | 6.35 | 5.35 | 5-10% | 4512 | Orange | 6.1 | 67.3 | 26.6 | 7.5 | 85.4 | 0.9 | 0.4 | 3.6 | 2.3 |
| 6001405100 | 6.34 | 5.33 | 5-10% | 4197 | Alameda | 16.3 | 68.8 | 14.9 | 5.4 | 68 | 11.8 | 0.1 | 9.3 | 5.3 |
| 6073007002 | 6.34 | 5.32 | 5-10% | 2947 | San Diego | 10.4 | 66.4 | 23.2 | 6.4 | 88.2 | 0.4 | 0.4 | 2.3 | 2.2 |
| 6059063006 | 6.34 | 5.31 | 5-10% | 2756 | Orange | 4.5 | 62.5 | 33 | 4.4 | 92.6 | 0.4 | 0.3 | 1.3 | 1.1 |
| 6073017055 | 6.34 | 5.30 | 5-10% | 5483 | San Diego | 15.6 | 79 | 5.4 | 7.7 | 56.4 | 2.1 | 0.3 | 29.4 | 4.1 |
| 6073008002 | 6.33 | 5.28 | 5-10% | 2522 | San Diego | 10.2 | 72.9 | 16.9 | 6.7 | 87.8 | 0.5 | 0.2 | 2.6 | 2.2 |
| 6081613900 | 6.33 | 5.27 | 5-10% | 6064 | San Mateo | 16.3 | 71.4 | 12.3 | 9.4 | 70.8 | 3.4 | 0.3 | 11.6 | 4.5 |
| 6061020104 | 6.32 | 5.26 | 5-10% | 1288 | Placer | 7.8 | 75.8 | 16.4 | 6.8 | 89.8 | 0.4 | 0.5 | 1.5 | 1.1 |
| 6013337300 | 6.32 | 5.25 | 5-10% | 6098 | Contra Costa | 11.3 | 71.3 | 17.4 | 9.3 | 68 | 1.6 | 0.1 | 16.6 | 4.3 |
| 6041104300 | 6.32 | 5.23 | 5-10% | 1530 | Marin | 7.3 | 66.6 | 26.1 | 5.9 | 87.2 | 0.7 | 0.2 | 3.8 | 2.2 |
| 6059062637 | 6.30 | 5.22 | 5-10% | 4525 | Orange | 11.6 | 82.9 | 5.5 | 16.4 | 63.7 | 2.5 | 0.4 | 13 | 4 |
| 6075020300 | 6.30 | 5.21 | 5-10% | 3034 | San Francisco | 3.7 | 88.7 | 7.6 | 15.3 | 66.3 | 2.2 | 0.3 | 12.1 | 3.8 |
| 6059042329 | 6.29 | 5.20 | 5-10% | 3772 | Orange | 9.4 | 73.6 | 17 | 10 | 80.7 | 0.8 | 0.1 | 5.8 | 2.6 |
| 6061020106 | 6.28 | 5.18 | 5-10% | 1719 | Placer | 11.2 | 78.5 | 10.3 | 21.8 | 74.2 | 0.2 | 0.3 | 1.6 | 1.9 |
| 6001421700 | 6.28 | 5.17 | 5-10% | 3198 | Alameda | 7.2 | 77.7 | 15.1 | 7.3 | 67.9 | 2.8 | 0.3 | 16.2 | 5.5 |
| 6075035100 | 6.28 | 5.16 | 5-10% | 7842 | San Francisco | 9.2 | 76.3 | 14.5 | 5.5 | 31.1 | 1.1 | 0.1 | 59.5 | 2.8 |

| | | | | | | | | | | | | | | |
|---|---|---|---|---|---|---|---|---|---|---|---|---|---|---|
| 6083003007 | 6.26 | 5.15 | 5-10% | 3653 | Santa Barbara | 7.2 | 62.2 | 30.6 | 8.5 | 86.7 | 0.6 | 0.1 | 2.2 | 2 |
| 6075021700 | 6.25 | 5.13 | 5-10% | 3948 | San Francisco | 10.4 | 70.7 | 18.9 | 12.9 | 54.8 | 9.5 | 0.4 | 18.2 | 4.3 |
| 6073008335 | 6.25 | 5.12 | 5-10% | 10541 | San Diego | 17.6 | 77 | 5.4 | 8.6 | 49.3 | 2 | 0.1 | 34.9 | 5.1 |
| 6073019804 | 6.24 | 5.11 | 5-10% | 4447 | San Diego | 11.2 | 74.9 | 13.9 | 12.9 | 78.5 | 0.9 | 0.1 | 4.6 | 3 |
| 6073009507 | 6.23 | 5.10 | 5-10% | 3369 | San Diego | 10.9 | 77.4 | 11.7 | 13.1 | 66.1 | 4 | 0.3 | 11.1 | 5.4 |
| 6059032020 | 6.22 | 5.08 | 5-10% | 5715 | Orange | 11.1 | 79.2 | 9.7 | 16.9 | 71 | 1 | 0.2 | 7.2 | 3.7 |
| 6073017022 | 6.19 | 5.07 | 5-10% | 5316 | San Diego | 12.8 | 74.3 | 12.9 | 10.5 | 73.5 | 3.1 | 0.1 | 8.7 | 4.1 |
| 6013349000 | 6.19 | 5.06 | 5-10% | 4686 | Contra Costa | 13.2 | 71.4 | 15.4 | 7.9 | 77.2 | 0.9 | 0.2 | 10 | 3.8 |
| 6073017041 | 6.18 | 5.04 | 5-10% | 6147 | San Diego | 13.2 | 77.6 | 9.2 | 20 | 64.6 | 1.6 | 0.2 | 10.4 | 3.2 |
| 6013345115 | 6.18 | 5.03 | 5-10% | 5734 | Contra Costa | 14.6 | 78.2 | 7.2 | 8.3 | 58.2 | 2.1 | 0.1 | 27 | 4.2 |
| 6085506801 | 6.18 | 5.02 | 5-10% | 5871 | Santa Clara | 13.3 | 74 | 12.7 | 9 | 72.9 | 0.4 | 0.2 | 13.1 | 4.4 |
| 6073011000 | 6.18 | 5.01 | 5-10% | 2799 | San Diego | 9 | 70 | 21 | 11 | 78.6 | 1.9 | 0.3 | 5.3 | 3 |
| 6013340002 | 6.16 | 4.99 | 1-5% (lowest scores) | 7000 | Contra Costa | 11.3 | 72.9 | 15.8 | 7.4 | 77.4 | 0.9 | 0.3 | 10.2 | 3.8 |
| 6053011900 | 6.16 | 4.98 | 1-5% (lowest scores) | 4449 | Monterey | 5.6 | 59.9 | 34.5 | 3.7 | 84.4 | 0.9 | 0.2 | 8.5 | 2.2 |
| 6013345116 | 6.15 | 4.97 | 1-5% (lowest scores) | 2859 | Contra Costa | 14.7 | 77.2 | 8.1 | 11.1 | 65 | 1.1 | 0.2 | 17.7 | 4.9 |
| 6073007301 | 6.14 | 4.96 | 1-5% (lowest scores) | 4948 | San Diego | 4.9 | 88.4 | 6.7 | 9 | 83.9 | 0.9 | 0.3 | 2.6 | 3.3 |
| 6111005306 | 6.14 | 4.94 | 1-5% (lowest scores) | 4867 | Ventura | 11.5 | 76.7 | 11.8 | 16.4 | 70.1 | 1 | 0.1 | 9.4 | 2.9 |
| 6085507203 | 6.14 | 4.93 | 1-5% (lowest scores) | 2632 | Santa Clara | 11.6 | 74.7 | 13.7 | 8.1 | 70.9 | 0.8 | 0.3 | 15.7 | 4.3 |
| 6013385200 | 6.14 | 4.92 | 1-5% (lowest scores) | 1320 | Contra Costa | 10.3 | 65.6 | 24.1 | 5.7 | 46.1 | 6 | 0.2 | 36.1 | 5.8 |
| 6097152300 | 6.14 | 4.91 | 1-5% (lowest scores) | 4329 | Sonoma | 9.4 | 64.4 | 26.2 | 6.3 | 87.8 | 0.5 | 0.3 | 2.3 | 2.7 |
| 6059032057 | 6.14 | 4.89 | 1-5% (lowest scores) | 7218 | Orange | 23.3 | 72.1 | 4.6 | 12.5 | 70.8 | 1.4 | 0.1 | 11.2 | 4 |
| 6073008330 | 6.09 | 4.88 | 1-5% (lowest scores) | 5668 | San Diego | 12.9 | 80.5 | 6.6 | 6.5 | 62 | 0.5 | 0.1 | 27.8 | 3.2 |
| 6059062643 | 6.09 | 4.87 | 1-5% (lowest scores) | 7246 | Orange | 12.9 | 73.2 | 13.9 | 4.7 | 71.7 | 0.5 | 0.1 | 18.7 | 4.3 |
| 6097151602 | 6.09 | 4.86 | 1-5% (lowest scores) | 3324 | Sonoma | 3 | 36.7 | 60.3 | 3.1 | 93.6 | 0.2 | 0.2 | 2 | 1 |
| 6081609300 | 6.08 | 4.84 | 1-5% (lowest scores) | 3315 | San Mateo | 18.2 | 68.4 | 13.4 | 8.9 | 79 | 0.7 | 0 | 7.8 | 3.6 |
| 6059099415 | 6.08 | 4.83 | 1-5% (lowest scores) | 5374 | Orange | 10 | 73.7 | 16.3 | 8.3 | 76.5 | 0.3 | 0.3 | 12 | 2.7 |
| 6001443200 | 6.08 | 4.82 | 1-5% (lowest scores) | 3704 | Alameda | 9.7 | 78.9 | 11.4 | 3.1 | 23 | 0.8 | 0 | 68.6 | 4.6 |
| 6041126200 | 6.07 | 4.81 | 1-5% (lowest scores) | 4249 | Marin | 10.5 | 64.6 | 24.9 | 5.7 | 79.1 | 1.4 | 0.2 | 10.1 | 3.5 |
| 6073009704 | 6.07 | 4.79 | 1-5% (lowest scores) | 5750 | San Diego | 10.2 | 71 | 18.8 | 13.4 | 71.9 | 4.1 | 0.3 | 6.7 | 3.6 |
| 6059042330 | 6.07 | 4.78 | 1-5% (lowest scores) | 6378 | Orange | 16.3 | 77.7 | 6 | 28 | 60 | 1.4 | 0.1 | 7.3 | 3.2 |
| 6013355304 | 6.04 | 4.77 | 1-5% (lowest scores) | 7831 | Contra Costa | 11.5 | 75.2 | 13.3 | 9.6 | 76.5 | 1.6 | 0.3 | 7.9 | 4 |
| 6037262303 | 6.03 | 4.75 | 1-5% (lowest scores) | 3290 | Los Angeles | 11.7 | 64.5 | 23.8 | 3.3 | 86.6 | 0.9 | 0 | 5.4 | 3.7 |
| 6111007405 | 6.03 | 4.74 | 1-5% (lowest scores) | 6304 | Ventura | 10.3 | 80.6 | 9.1 | 7.2 | 79.6 | 1.1 | 0.1 | 9.2 | 2.8 |
| 6075030302 | 6.03 | 4.73 | 1-5% (lowest scores) | 3549 | San Francisco | 9.4 | 74.5 | 16.1 | 6.4 | 43.4 | 0.6 | 0.2 | 45.2 | 4.2 |
| 6073008200 | 6.02 | 4.72 | 1-5% (lowest scores) | 3022 | San Diego | 4.8 | 55 | 40.2 | 6.9 | 86.1 | 0.6 | 0 | 4.3 | 2.1 |
| 6075020402 | 6.01 | 4.70 | 1-5% (lowest scores) | 3997 | San Francisco | 4.9 | 84.8 | 10.3 | 11.2 | 66.3 | 2.8 | 0.2 | 15.3 | 4.2 |
| 6013321102 | 6.01 | 4.69 | 1-5% (lowest scores) | 6689 | Contra Costa | 9.5 | 76.5 | 14 | 10.5 | 71.5 | 1.3 | 0.1 | 12.3 | 4.3 |
| 6037621001 | 6.00 | 4.68 | 1-5% (lowest scores) | 4119 | Los Angeles | 10.4 | 76.7 | 12.9 | 8 | 78.7 | 1.1 | 0 | 7.5 | 4.7 |
| 6061021131 | 5.99 | 4.67 | 1-5% (lowest scores) | 5142 | Placer | 12.2 | 73.6 | 14.2 | 12 | 77.9 | 1.4 | 0.3 | 5.6 | 2.8 |
| 6073017106 | 5.98 | 4.65 | 1-5% (lowest scores) | 4973 | San Diego | 8.1 | 69.2 | 22.7 | 6.5 | 87.9 | 0.3 | 0 | 3.3 | 2 |
| 6073019809 | 5.97 | 4.64 | 1-5% (lowest scores) | 4005 | San Diego | 8.5 | 67.8 | 23.7 | 13.8 | 76.7 | 1.6 | 0.3 | 5.1 | 2.5 |
| 6097151504 | 5.97 | 4.63 | 1-5% (lowest scores) | 3563 | Sonoma | 11.1 | 69.6 | 19.3 | 10.8 | 80.8 | 1.8 | 0.7 | 2.6 | 3.2 |
| 6053012502 | 5.97 | 4.62 | 1-5% (lowest scores) | 5082 | Monterey | 7.8 | 79.1 | 13.1 | 11.8 | 73.7 | 2 | 0.3 | 7.5 | 4.7 |
| 6059062632 | 5.96 | 4.60 | 1-5% (lowest scores) | 3979 | Orange | 8 | 70.1 | 21.9 | 6.4 | 85.1 | 1.1 | 0.1 | 4.5 | 2.8 |
| 6001420100 | 5.96 | 4.59 | 1-5% (lowest scores) | 2355 | Alameda | 13.4 | 74.5 | 12.1 | 8.7 | 61.3 | 2.3 | 0 | 21.6 | 6.2 |
| 6001408000 | 5.94 | 4.58 | 1-5% (lowest scores) | 2671 | Alameda | 9.7 | 73.3 | 17 | 9.6 | 51.8 | 12.8 | 0.3 | 19.8 | 5.7 |
| 6085508203 | 5.94 | 4.57 | 1-5% (lowest scores) | 5172 | Santa Clara | 19.7 | 66.6 | 13.7 | 4.8 | 42.1 | 1.1 | 0.1 | 47.9 | 4 |
| 6041110200 | 5.94 | 4.55 | 1-5% (lowest scores) | 5327 | Marin | 10.6 | 63.9 | 25.5 | 4.1 | 88 | 0.2 | 0.1 | 4.4 | 3.1 |
| 6055201101 | 5.93 | 4.54 | 1-5% (lowest scores) | 1996 | Napa | 11.7 | 68.3 | 20 | 8.4 | 85.1 | 0.4 | 0.2 | 3.4 | 2.5 |
| 6083001306 | 5.93 | 4.53 | 1-5% (lowest scores) | 3230 | Santa Barbara | 6.9 | 65.5 | 27.6 | 13.3 | 79.6 | 1 | 0.2 | 3.9 | 2 |
| 6075030400 | 5.93 | 4.52 | 1-5% (lowest scores) | 5106 | San Francisco | 9.7 | 72.9 | 17.4 | 5.4 | 49 | 1 | 0 | 40.1 | 4.5 |
| 6037620201 | 5.92 | 4.50 | 1-5% (lowest scores) | 1530 | Los Angeles | 5.3 | 87.6 | 7.1 | 8 | 80.9 | 0.7 | 0.1 | 5.9 | 4.3 |
| 6073017108 | 5.91 | 4.49 | 1-5% (lowest scores) | 4658 | San Diego | 13.9 | 75.8 | 10.3 | 12.2 | 79 | 0.4 | 0.2 | 4.7 | 3.6 |
| 6041108100 | 5.90 | 4.48 | 1-5% (lowest scores) | 6406 | Marin | 10.9 | 67 | 22.1 | 6.8 | 82.1 | 1 | 0.4 | 6 | 3.8 |
| 6085502603 | 5.89 | 4.46 | 1-5% (lowest scores) | 2527 | Santa Clara | 13 | 69.9 | 17.1 | 14.8 | 70.1 | 1.3 | 0.1 | 9.2 | 4.6 |
| 6037670202 | 5.88 | 4.45 | 1-5% (lowest scores) | 2594 | Los Angeles | 11.4 | 66.5 | 22.1 | 8.2 | 70.3 | 1.1 | 0.3 | 16.8 | 3.3 |
| 6059099220 | 5.87 | 4.44 | 1-5% (lowest scores) | 5115 | Orange | 8.1 | 81.5 | 10.4 | 11.4 | 76.9 | 0.8 | 0.5 | 7.1 | 3.3 |
| 6073009804 | 5.87 | 4.43 | 1-5% (lowest scores) | 4773 | San Diego | 10.6 | 68.6 | 20.8 | 14.1 | 74 | 2.6 | 0.4 | 5.6 | 3.3 |
| 6059099506 | 5.87 | 4.41 | 1-5% (lowest scores) | 1253 | Orange | 6.9 | 78.1 | 15 | 8.9 | 83.6 | 0.3 | 0.5 | 4 | 2.8 |
| 6001420600 | 5.85 | 4.40 | 1-5% (lowest scores) | 3283 | Alameda | 13.6 | 73.3 | 13.1 | 7.6 | 69.5 | 2.7 | 0.1 | 14.6 | 5.4 |
| 6081605600 | 5.85 | 4.39 | 1-5% (lowest scores) | 5556 | San Mateo | 12.3 | 66.1 | 21.6 | 3.9 | 65 | 0.2 | 0 | 27.2 | 3.6 |
| 6073017046 | 5.85 | 4.38 | 1-5% (lowest scores) | 3678 | San Diego | 12.2 | 76.3 | 11.5 | 8.2 | 67.3 | 1.1 | 0 | 20.4 | 3 |
| 6037621004 | 5.84 | 4.36 | 1-5% (lowest scores) | 4762 | Los Angeles | 11 | 79 | 10 | 7.5 | 84.6 | 0.6 | 0.2 | 3.9 | 3.3 |
| 6037901210 | 5.83 | 4.35 | 1-5% (lowest scores) | 1591 | Los Angeles | 10.4 | 81.4 | 8.2 | 13.4 | 80.7 | 1.4 | 0.2 | 1.3 | 3 |
| 6059032044 | 5.83 | 4.34 | 1-5% (lowest scores) | 5760 | Orange | 7.7 | 81.1 | 11.2 | 6.8 | 85.1 | 0.7 | 0.2 | 4.7 | 2.5 |
| 6073006900 | 5.83 | 4.33 | 1-5% (lowest scores) | 5148 | San Diego | 10.4 | 74.8 | 14.8 | 10.2 | 82.1 | 1.1 | 0.5 | 3 | 3.1 |

| | | | | | | | | | | | | | | |
|---|---|---|---|---|---|---|---|---|---|---|---|---|---|---|
| 6081603300 | 5.82 | 4.31 | 1-5% (lowest scores) | 6404 | San Mateo | 10.7 | 75.5 | 13.8 | 15.5 | 70.5 | 1 | 0.3 | 7.5 | 5.2 |
| 6087122202 | 5.82 | 4.30 | 1-5% (lowest scores) | 2221 | Santa Cruz | 10 | 74.4 | 15.6 | 11.1 | 81 | 0.8 | 0.1 | 4.4 | 2.5 |
| 6059062629 | 5.82 | 4.29 | 1-5% (lowest scores) | 2660 | Orange | 10.7 | 71.6 | 17.7 | 3.8 | 61.1 | 0.5 | 0 | 30.5 | 4.1 |
| 6065045608 | 5.81 | 4.28 | 1-5% (lowest scores) | 2878 | Riverside | 2.4 | 53.4 | 44.2 | 5 | 89.9 | 0.6 | 0.1 | 3.3 | 1.1 |
| 6085508301 | 5.81 | 4.26 | 1-5% (lowest scores) | 4410 | Santa Clara | 12 | 68.6 | 19.4 | 4.5 | 54.2 | 0.7 | 0.1 | 37.5 | 3.1 |
| 6085506900 | 5.79 | 4.25 | 1-5% (lowest scores) | 7436 | Santa Clara | 12.9 | 68.7 | 18.4 | 6.9 | 76.7 | 0.5 | 0.1 | 11.4 | 4.4 |
| 6037800330 | 5.78 | 4.24 | 1-5% (lowest scores) | 942 | Los Angeles | 9.6 | 77.9 | 12.5 | 6.6 | 89.4 | 1 | 0.3 | 1 | 1.8 |
| 6083000400 | 5.76 | 4.22 | 1-5% (lowest scores) | 4659 | Santa Barbara | 8 | 75.2 | 16.8 | 16.6 | 76.9 | 0.8 | 0.2 | 3.3 | 2.1 |
| 6081604700 | 5.76 | 4.21 | 1-5% (lowest scores) | 2781 | San Mateo | 8.7 | 72 | 19.3 | 9.1 | 44 | 0.4 | 0 | 43.3 | 3.2 |
| 6017030807 | 5.75 | 4.20 | 1-5% (lowest scores) | 3986 | El Dorado | 12.8 | 75.2 | 12 | 9 | 83.8 | 0.8 | 0.5 | 2.9 | 3 |
| 6085511500 | 5.75 | 4.19 | 1-5% (lowest scores) | 7513 | Santa Clara | 10.2 | 74 | 15.8 | 6.4 | 68.8 | 2 | 0.2 | 17.7 | 4.9 |
| 6085502202 | 5.73 | 4.17 | 1-5% (lowest scores) | 2870 | Santa Clara | 9.8 | 74.8 | 15.4 | 13.7 | 65.2 | 2.3 | 0.2 | 14.1 | 4.5 |
| 6073007702 | 5.73 | 4.16 | 1-5% (lowest scores) | 3849 | San Diego | 3.7 | 89.3 | 7 | 10.3 | 81 | 1.1 | 0.3 | 3.9 | 3.4 |
| 6073021800 | 5.73 | 4.15 | 1-5% (lowest scores) | 2022 | San Diego | 8.5 | 68.4 | 23.1 | 7.5 | 87.2 | 0.4 | 0.4 | 2.8 | 1.8 |
| 6081609603 | 5.72 | 4.14 | 1-5% (lowest scores) | 5318 | San Mateo | 11.2 | 70.6 | 18.2 | 7.3 | 78.1 | 1 | 0.1 | 10.3 | 3.3 |
| 6087120301 | 5.72 | 4.12 | 1-5% (lowest scores) | 5180 | Santa Cruz | 9.5 | 79.5 | 11 | 7.5 | 86.3 | 0.6 | 0.5 | 1.6 | 3.3 |
| 6079011901 | 5.71 | 4.11 | 1-5% (lowest scores) | 2987 | San Luis Obispo | 8.9 | 63.3 | 27.8 | 13.8 | 78.8 | 0.9 | 0.4 | 3.2 | 2.9 |
| 6073010800 | 5.70 | 4.10 | 1-5% (lowest scores) | 2390 | San Diego | 9.9 | 73.6 | 16.5 | 8.6 | 85.1 | 0.7 | 0.7 | 1.8 | 3.1 |
| 6067008403 | 5.70 | 4.09 | 1-5% (lowest scores) | 5246 | Sacramento | 14.4 | 73.8 | 11.8 | 10 | 69.6 | 1.4 | 0.4 | 13.1 | 5.5 |
| 6075030800 | 5.69 | 4.07 | 1-5% (lowest scores) | 5667 | San Francisco | 10 | 69.6 | 20.4 | 6.5 | 56.6 | 1.5 | 0.1 | 30.9 | 4.5 |
| 6073009506 | 5.68 | 4.06 | 1-5% (lowest scores) | 4258 | San Diego | 12.7 | 75.4 | 11.9 | 12.5 | 67 | 4.4 | 0.3 | 10.1 | 5.7 |
| 6111007403 | 5.68 | 4.05 | 1-5% (lowest scores) | 5585 | Ventura | 10.9 | 80 | 9.1 | 5.2 | 78 | 1.2 | 0.1 | 12.8 | 2.7 |
| 6065045124 | 5.67 | 4.04 | 1-5% (lowest scores) | 1505 | Riverside | 5.7 | 58.2 | 36.1 | 15.7 | 80.3 | 0.6 | 0.7 | 1.7 | 1 |
| 6001404200 | 5.66 | 4.02 | 1-5% (lowest scores) | 3483 | Alameda | 12.9 | 71.3 | 15.8 | 5.4 | 72.9 | 4.9 | 0.3 | 11.7 | 4.9 |
| 6079012600 | 5.64 | 4.01 | 1-5% (lowest scores) | 7793 | San Luis Obispo | 11.7 | 73.6 | 14.7 | 14 | 80 | 1 | 0.7 | 2 | 2.3 |
| 6067008507 | 5.63 | 4.00 | 1-5% (lowest scores) | 3687 | Sacramento | 16 | 76.5 | 7.5 | 9.8 | 66.8 | 2 | 0.4 | 17.3 | 3.6 |
| 6079012505 | 5.62 | 3.99 | 1-5% (lowest scores) | 4891 | San Luis Obispo | 12.5 | 76.4 | 11.1 | 14.6 | 79.3 | 0.7 | 0.7 | 2.1 | 2.7 |
| 6037670403 | 5.62 | 3.97 | 1-5% (lowest scores) | 2407 | Los Angeles | 9.6 | 62.8 | 27.6 | 5.5 | 54.1 | 1.3 | 0.2 | 34.6 | 4.2 |
| 6001404400 | 5.62 | 3.96 | 1-5% (lowest scores) | 5314 | Alameda | 13 | 75.1 | 11.9 | 6.7 | 67.6 | 4.8 | 0.1 | 15.5 | 5.4 |
| 6073019103 | 5.60 | 3.95 | 1-5% (lowest scores) | 6373 | San Diego | 10.6 | 75.3 | 14.1 | 24.4 | 69.4 | 0.4 | 0.6 | 3 | 2.1 |
| 6041119202 | 5.59 | 3.93 | 1-5% (lowest scores) | 3361 | Marin | 14.6 | 64.9 | 20.5 | 3.5 | 86.8 | 0.6 | 0 | 5.5 | 3.6 |
| 6059075606 | 5.58 | 3.92 | 1-5% (lowest scores) | 6941 | Orange | 12.2 | 71.2 | 16.6 | 9.2 | 69.3 | 0.5 | 0.3 | 17.5 | 3.2 |
| 6041109002 | 5.58 | 3.91 | 1-5% (lowest scores) | 3956 | Marin | 12.4 | 68.1 | 19.5 | 6.6 | 85.4 | 1 | 0.2 | 4.2 | 2.5 |
| 6083002909 | 5.57 | 3.90 | 1-5% (lowest scores) | 5963 | Santa Barbara | 12 | 77.1 | 10.9 | 37.3 | 50.3 | 1 | 0.5 | 7.7 | 3.2 |
| 6059075810 | 5.56 | 3.88 | 1-5% (lowest scores) | 3046 | Orange | 9.7 | 67.1 | 23.2 | 11.4 | 68.7 | 1 | 0.5 | 16.3 | 2.1 |
| 6073017104 | 5.55 | 3.87 | 1-5% (lowest scores) | 3907 | San Diego | 11.4 | 77.1 | 11.5 | 11.4 | 80.7 | 0.5 | 0.2 | 4.4 | 2.9 |
| 6061023100 | 5.55 | 3.86 | 1-5% (lowest scores) | 6491 | Placer | 20.4 | 72.8 | 6.8 | 11.1 | 65.6 | 2.6 | 0.4 | 15.9 | 4.4 |
| 6085507500 | 5.53 | 3.85 | 1-5% (lowest scores) | 5810 | Santa Clara | 9.3 | 72.1 | 18.6 | 1.9 | 41.5 | 0.2 | 0 | 53.6 | 2.9 |
| 6013338302 | 5.52 | 3.83 | 1-5% (lowest scores) | 5807 | Contra Costa | 10.4 | 69.9 | 19.7 | 6.4 | 75.1 | 0.8 | 0.2 | 13.2 | 4.3 |
| 6001426200 | 5.52 | 3.82 | 1-5% (lowest scores) | 4745 | Alameda | 14 | 74.6 | 11.4 | 4.8 | 70 | 1.3 | 0 | 18.3 | 5.6 |
| 6055200703 | 5.50 | 3.81 | 1-5% (lowest scores) | 3047 | Napa | 9.9 | 69.9 | 20.2 | 10.1 | 84.6 | 0.4 | 0.4 | 2.7 | 1.8 |
| 6073008003 | 5.50 | 3.80 | 1-5% (lowest scores) | 3334 | San Diego | 4.8 | 84.6 | 10.6 | 10 | 82.4 | 0.7 | 0.2 | 3.1 | 3.7 |
| 6061020604 | 5.48 | 3.78 | 1-5% (lowest scores) | 5589 | Placer | 10.9 | 75.1 | 14 | 7.4 | 83.3 | 0.7 | 0.4 | 4.7 | 3.6 |
| 6059032032 | 5.48 | 3.77 | 1-5% (lowest scores) | 3075 | Orange | 10.9 | 77.5 | 11.6 | 16.4 | 70.9 | 0.6 | 0.1 | 7.7 | 4.3 |
| 6097153807 | 5.45 | 3.76 | 1-5% (lowest scores) | 3861 | Sonoma | 12.5 | 75.4 | 12.1 | 16 | 77.3 | 0.4 | 0.6 | 2.8 | 2.9 |
| 6075012601 | 5.44 | 3.75 | 1-5% (lowest scores) | 2329 | San Francisco | 7 | 81.7 | 11.3 | 5.4 | 80.7 | 0.6 | 0.2 | 9.9 | 3.1 |
| 6079011800 | 5.42 | 3.73 | 1-5% (lowest scores) | 7138 | San Luis Obispo | 8.6 | 69.9 | 21.5 | 9.1 | 84.6 | 0.3 | 0.2 | 3.2 | 2.7 |
| 6037670407 | 5.41 | 3.72 | 1-5% (lowest scores) | 5758 | Los Angeles | 9.6 | 74.8 | 15.6 | 6.2 | 39.2 | 2.8 | 0 | 47.8 | 3.9 |
| 6041120000 | 5.41 | 3.71 | 1-5% (lowest scores) | 6027 | Marin | 10.7 | 70.6 | 18.7 | 5.6 | 86.7 | 0.6 | 0.1 | 3.8 | 3.2 |
| 6013390200 | 5.41 | 3.70 | 1-5% (lowest scores) | 1719 | Contra Costa | 11.4 | 70.6 | 18 | 7.8 | 66.6 | 1.9 | 0.2 | 17.5 | 6 |
| 6081613300 | 5.40 | 3.68 | 1-5% (lowest scores) | 2723 | San Mateo | 10.9 | 69.4 | 19.7 | 4.6 | 84 | 0.5 | 0.1 | 8 | 2.8 |
| 6075030500 | 5.40 | 3.67 | 1-5% (lowest scores) | 3046 | San Francisco | 7.8 | 62.5 | 29.7 | 10.3 | 51.7 | 10.7 | 0.3 | 23.4 | 3.7 |
| 6081613000 | 5.40 | 3.66 | 1-5% (lowest scores) | 3386 | San Mateo | 11.2 | 64.4 | 24.4 | 5.1 | 73.1 | 0.6 | 0.1 | 16.8 | 4.3 |
| 6037670324 | 5.37 | 3.64 | 1-5% (lowest scores) | 5127 | Los Angeles | 10.8 | 64.9 | 24.3 | 3.8 | 80.2 | 0.8 | 0.1 | 11.7 | 3.4 |
| 6085502907 | 5.37 | 3.63 | 1-5% (lowest scores) | 3912 | Santa Clara | 13.4 | 71.1 | 15.5 | 15.9 | 64.5 | 1.1 | 0.2 | 13.1 | 5.1 |
| 6085509600 | 5.36 | 3.62 | 1-5% (lowest scores) | 2625 | Santa Clara | 10.1 | 82.2 | 7.7 | 12.6 | 57.3 | 1.4 | 0.1 | 24.5 | 4 |
| 6055201402 | 5.36 | 3.61 | 1-5% (lowest scores) | 2871 | Napa | 8.6 | 69.4 | 22 | 6.8 | 88.4 | 0.5 | 0.3 | 2.1 | 2 |
| 6059062701 | 5.35 | 3.59 | 1-5% (lowest scores) | 2800 | Orange | 7.4 | 69.2 | 23.4 | 5 | 89.4 | 0.5 | 0.2 | 3.1 | 1.8 |
| 6075012800 | 5.35 | 3.58 | 1-5% (lowest scores) | 4106 | San Francisco | 7.5 | 77.7 | 14.8 | 4.8 | 82.4 | 0.9 | 0.1 | 9.1 | 2.8 |
| 6037262604 | 5.34 | 3.57 | 1-5% (lowest scores) | 6092 | Los Angeles | 11.2 | 64.7 | 24.1 | 4.8 | 84.6 | 0.5 | 0.1 | 6.6 | 3.3 |
| 6037651201 | 5.34 | 3.56 | 1-5% (lowest scores) | 5056 | Los Angeles | 10.9 | 75.3 | 13.8 | 11.4 | 67.5 | 0.7 | 0.4 | 15.9 | 4 |
| 6059042305 | 5.34 | 3.54 | 1-5% (lowest scores) | 3432 | Orange | 7.5 | 70.7 | 21.8 | 5.5 | 89.2 | 0.3 | 0.1 | 2.8 | 2.1 |
| 6075012602 | 5.33 | 3.53 | 1-5% (lowest scores) | 2909 | San Francisco | 8.3 | 78 | 13.7 | 4.6 | 82.4 | 0.6 | 0 | 10.1 | 2.3 |
| 6097152202 | 5.33 | 3.52 | 1-5% (lowest scores) | 6763 | Sonoma | 12.6 | 68.8 | 18.6 | 17.9 | 70.1 | 2.1 | 0.9 | 5.2 | 3.8 |
| 6073017050 | 5.32 | 3.51 | 1-5% (lowest scores) | 3068 | San Diego | 11.5 | 72.5 | 16 | 21.7 | 59.6 | 1.2 | 0.4 | 13.9 | 3.2 |
| 6081603400 | 5.32 | 3.49 | 1-5% (lowest scores) | 5483 | San Mateo | 10.1 | 72.4 | 17.5 | 16.3 | 65.5 | 1.3 | 0.4 | 11.3 | 5.2 |

| | | | | | | | | | | | | | | |
|---|---|---|---|---|---|---|---|---|---|---|---|---|---|---|
| 6037262301 | 5.29 | 3.48 | 1-5% (lowest scores) | 2744 | Los Angeles | 9.2 | 63.6 | 27.2 | 11.7 | 71.6 | 1.2 | 0.1 | 12.1 | 3.4 |
| 6081611100 | 5.29 | 3.47 | 1-5% (lowest scores) | 5913 | San Mateo | 13 | 69.4 | 17.6 | 12.5 | 74.2 | 1 | 0.1 | 8.1 | 4.1 |
| 6111007506 | 5.28 | 3.46 | 1-5% (lowest scores) | 7514 | Ventura | 12.1 | 78.3 | 9.6 | 15.3 | 74.1 | 0.9 | 0.2 | 6.4 | 3.1 |
| 6083002009 | 5.28 | 3.44 | 1-5% (lowest scores) | 3826 | Santa Barbara | 10.5 | 73.6 | 15.9 | 25.7 | 65.4 | 1.5 | 0.8 | 3.5 | 3.2 |
| 6065045114 | 5.26 | 3.43 | 1-5% (lowest scores) | 1939 | Riverside | 3.1 | 48 | 48.9 | 5.6 | 90.6 | 0.6 | 0.5 | 1.7 | 1.1 |
| 6061021035 | 5.26 | 3.42 | 1-5% (lowest scores) | 7431 | Placer | 17.5 | 77.4 | 5.1 | 12.7 | 68.1 | 1.8 | 0.4 | 12.9 | 4.2 |
| 6075021100 | 5.26 | 3.41 | 1-5% (lowest scores) | 3853 | San Francisco | 9.3 | 80.9 | 9.8 | 9.1 | 74.9 | 1.2 | 0.2 | 9.9 | 4.7 |
| 6085506604 | 5.24 | 3.39 | 1-5% (lowest scores) | 7324 | Santa Clara | 14.9 | 73.7 | 11.4 | 11.9 | 54.1 | 2.7 | 0.2 | 26.4 | 4.7 |
| 6059075809 | 5.24 | 3.38 | 1-5% (lowest scores) | 3023 | Orange | 6.5 | 68.5 | 25 | 10.1 | 74.6 | 0.5 | 0.4 | 12.4 | 2 |
| 6001450604 | 5.24 | 3.37 | 1-5% (lowest scores) | 4796 | Alameda | 12.4 | 75.3 | 12.3 | 10.6 | 72.9 | 0.9 | 0.3 | 11.9 | 3.4 |
| 6075017101 | 5.23 | 3.35 | 1-5% (lowest scores) | 3544 | San Francisco | 10 | 80.2 | 9.8 | 7.6 | 78.3 | 3.7 | 0.1 | 6.5 | 3.8 |
| 6059032031 | 5.22 | 3.34 | 1-5% (lowest scores) | 3654 | Orange | 11.9 | 78.3 | 9.8 | 16.8 | 69.6 | 1 | 0.3 | 8.3 | 4 |
| 6067008209 | 5.21 | 3.33 | 1-5% (lowest scores) | 4085 | Sacramento | 9.3 | 74.2 | 16.5 | 9.4 | 81.3 | 1 | 0.4 | 5.3 | 2.5 |
| 6085511800 | 5.21 | 3.32 | 1-5% (lowest scores) | 4009 | Santa Clara | 11.2 | 76.8 | 12 | 8.4 | 83.2 | 0.3 | 0.2 | 4 | 3.8 |
| 6111005802 | 5.16 | 3.30 | 1-5% (lowest scores) | 9090 | Ventura | 16.2 | 72.6 | 11.2 | 8.4 | 72.4 | 1.3 | 0.2 | 14 | 3.7 |
| 6081611600 | 5.16 | 3.29 | 1-5% (lowest scores) | 2262 | San Mateo | 19.9 | 70.2 | 9.9 | 10.8 | 69.8 | 3.1 | 0.1 | 11.1 | 5.2 |
| 6037621102 | 5.15 | 3.28 | 1-5% (lowest scores) | 2883 | Los Angeles | 13.7 | 78.2 | 8.1 | 9.8 | 78 | 0.8 | 0.2 | 6.9 | 4.3 |
| 6059032048 | 5.15 | 3.27 | 1-5% (lowest scores) | 5590 | Orange | 11.3 | 64.8 | 23.9 | 13.5 | 71.5 | 1.4 | 0.1 | 10.3 | 3.2 |
| 6075030700 | 5.13 | 3.25 | 1-5% (lowest scores) | 6343 | San Francisco | 11.8 | 70.7 | 17.5 | 9.6 | 57.2 | 2.9 | 0.1 | 25 | 5.2 |
| 6075021500 | 5.13 | 3.24 | 1-5% (lowest scores) | 5096 | San Francisco | 10.5 | 80.5 | 9 | 19.2 | 65.6 | 1.3 | 0.2 | 10.2 | 3.5 |
| 6041103100 | 5.12 | 3.23 | 1-5% (lowest scores) | 7168 | Marin | 10.5 | 71.5 | 18 | 8.3 | 83.4 | 1 | 0.2 | 4.4 | 2.7 |
| 6013343003 | 5.09 | 3.22 | 1-5% (lowest scores) | 3843 | Contra Costa | 10.3 | 74 | 15.7 | 5.8 | 82.9 | 1 | 0.1 | 7.1 | 3.1 |
| 6085511907 | 5.08 | 3.20 | 1-5% (lowest scores) | 3988 | Santa Clara | 13.4 | 70.8 | 15.8 | 8.3 | 52.9 | 0.6 | 0.1 | 34.4 | 3.7 |
| 6061022014 | 5.07 | 3.19 | 1-5% (lowest scores) | 1736 | Placer | 7 | 79.2 | 13.8 | 2.9 | 89.2 | 0.3 | 0.2 | 4.7 | 2.6 |
| 6053011000 | 5.06 | 3.18 | 1-5% (lowest scores) | 5933 | Monterey | 7.7 | 70.7 | 21.6 | 8.5 | 86.7 | 0.4 | 0.2 | 1.7 | 2.5 |
| 6067008510 | 5.05 | 3.17 | 1-5% (lowest scores) | 4744 | Sacramento | 14.2 | 79.6 | 6.2 | 9.5 | 73.4 | 1.9 | 0.3 | 11.4 | 3.3 |
| 6017030808 | 5.04 | 3.15 | 1-5% (lowest scores) | 6897 | El Dorado | 14.8 | 74.3 | 10.9 | 10.8 | 82.3 | 0.7 | 0.6 | 2.8 | 2.8 |
| 6075030102 | 5.03 | 3.14 | 1-5% (lowest scores) | 4838 | San Francisco | 9.4 | 78.6 | 12 | 6.3 | 63 | 2 | 0.1 | 24.3 | 4.3 |
| 6079010701 | 5.03 | 3.13 | 1-5% (lowest scores) | 4650 | San Luis Obispo | 10.7 | 75.7 | 13.6 | 14.3 | 76.9 | 0.5 | 0.5 | 5.2 | 2.6 |
| 6073017053 | 5.01 | 3.12 | 1-5% (lowest scores) | 3364 | San Diego | 7.7 | 80 | 12.3 | 5.1 | 84.5 | 1.1 | 0.2 | 6.2 | 2.9 |
| 6061020601 | 4.98 | 3.10 | 1-5% (lowest scores) | 6911 | Placer | 9.4 | 72.5 | 18.1 | 5.9 | 86.9 | 0.7 | 0.5 | 3.2 | 2.7 |
| 6041124200 | 4.95 | 3.09 | 1-5% (lowest scores) | 5626 | Marin | 11.5 | 63.7 | 24.8 | 4.4 | 85.4 | 1 | 0.2 | 5.6 | 3.4 |
| 6073008327 | 4.93 | 3.08 | 1-5% (lowest scores) | 5775 | San Diego | 12.6 | 76.7 | 10.7 | 6.8 | 69.5 | 0.5 | 0.1 | 19.8 | 3.4 |
| 6087121000 | 4.91 | 3.06 | 1-5% (lowest scores) | 3423 | Santa Cruz | 9.1 | 76.8 | 14.1 | 6.1 | 88.2 | 0.2 | 0.5 | 2.1 | 2.8 |
| 6057000102 | 4.90 | 3.05 | 1-5% (lowest scores) | 6677 | Nevada | 8.6 | 67.7 | 23.7 | 7 | 88.7 | 0.3 | 0.5 | 1.2 | 2.4 |
| 6059032038 | 4.89 | 3.04 | 1-5% (lowest scores) | 6602 | Orange | 11.6 | 81.6 | 6.8 | 10.5 | 67.3 | 0.7 | 0.1 | 16.7 | 4.8 |
| 6065044922 | 4.88 | 3.03 | 1-5% (lowest scores) | 3494 | Riverside | 9.1 | 67.3 | 23.6 | 13.8 | 74.3 | 2.5 | 0.3 | 7.3 | 1.8 |
| 6073007907 | 4.87 | 3.01 | 1-5% (lowest scores) | 3048 | San Diego | 2.5 | 93.8 | 3.7 | 11.8 | 79.8 | 1.3 | 0.3 | 3 | 3.7 |
| 6037137504 | 4.85 | 3.00 | 1-5% (lowest scores) | 1939 | Los Angeles | 9.3 | 68.6 | 22.1 | 4.3 | 83 | 3 | 0 | 4.8 | 4.8 |
| 6059062702 | 4.85 | 2.99 | 1-5% (lowest scores) | 4713 | Orange | 8.2 | 72.9 | 18.9 | 6 | 88.4 | 0.3 | 0.2 | 3.3 | 1.7 |
| 6059062620 | 4.84 | 2.98 | 1-5% (lowest scores) | 5065 | Orange | 8.3 | 74 | 17.7 | 6.9 | 86.2 | 0.6 | 0.1 | 3.7 | 2.6 |
| 6041132200 | 4.83 | 2.96 | 1-5% (lowest scores) | 1774 | Marin | 7.4 | 69.2 | 23.4 | 14.8 | 80.9 | 0.6 | 0.3 | 1.6 | 1.8 |
| 6075013200 | 4.83 | 2.95 | 1-5% (lowest scores) | 4162 | San Francisco | 8.8 | 74.2 | 17 | 3.8 | 81.3 | 1.1 | 0 | 10.7 | 3.1 |
| 6087122001 | 4.81 | 2.94 | 1-5% (lowest scores) | 4909 | Santa Cruz | 9.3 | 77.6 | 13.1 | 13.5 | 79.8 | 0.6 | 0.2 | 2.9 | 3.1 |
| 6111007406 | 4.81 | 2.93 | 1-5% (lowest scores) | 2377 | Ventura | 10.9 | 82.9 | 6.2 | 4.6 | 79.3 | 0.9 | 0.2 | 12.9 | 2.1 |
| 6037800506 | 4.80 | 2.91 | 1-5% (lowest scores) | 3074 | Los Angeles | 9.2 | 69.6 | 21.2 | 5.1 | 84.4 | 1 | 0.1 | 5.8 | 3.7 |
| 6089011701 | 4.79 | 2.90 | 1-5% (lowest scores) | 2240 | Shasta | 15.9 | 70 | 14.1 | 8.3 | 82.3 | 1.1 | 2.4 | 0.9 | 5 |
| 6085511912 | 4.79 | 2.89 | 1-5% (lowest scores) | 5440 | Santa Clara | 12.5 | 75.7 | 11.8 | 5.7 | 48 | 0.5 | 0.2 | 42.2 | 3.5 |
| 6037920111 | 4.78 | 2.88 | 1-5% (lowest scores) | 3246 | Los Angeles | 12.1 | 80.3 | 7.6 | 19.7 | 65.2 | 2.4 | 0.2 | 8.8 | 3.7 |
| 6073007910 | 4.78 | 2.86 | 1-5% (lowest scores) | 2797 | San Diego | 2.4 | 91.9 | 5.7 | 9.7 | 81.7 | 1.4 | 0.1 | 3.8 | 3.3 |
| 6073010900 | 4.77 | 2.85 | 1-5% (lowest scores) | 1750 | San Diego | 9.9 | 68.7 | 21.4 | 8.7 | 87 | 0.5 | 0.1 | 1.5 | 2.2 |
| 6073008337 | 4.76 | 2.84 | 1-5% (lowest scores) | 4316 | San Diego | 12.5 | 77.7 | 9.8 | 9.3 | 57.1 | 2.3 | 0.3 | 25.7 | 5.3 |
| 6041128200 | 4.75 | 2.83 | 1-5% (lowest scores) | 4582 | Marin | 13.6 | 71.5 | 14.9 | 4.6 | 85.9 | 0.8 | 0.1 | 5.4 | 3.2 |
| 6061023500 | 4.75 | 2.81 | 1-5% (lowest scores) | 5159 | Placer | 22.7 | 73.1 | 4.2 | 11.6 | 70.5 | 2.1 | 0.5 | 10.9 | 4.4 |
| 6085511400 | 4.73 | 2.80 | 1-5% (lowest scores) | 3639 | Santa Clara | 11.9 | 71.6 | 16.5 | 4.7 | 73.5 | 0.7 | 0 | 17.4 | 3.7 |
| 6041107000 | 4.73 | 2.79 | 1-5% (lowest scores) | 6142 | Marin | 11.5 | 68.4 | 20.1 | 7.2 | 81.1 | 1.1 | 0.1 | 7 | 3.5 |
| 6013321103 | 4.72 | 2.77 | 1-5% (lowest scores) | 4518 | Contra Costa | 10.7 | 73.4 | 15.9 | 10.3 | 76.7 | 1.3 | 0.3 | 7.2 | 4.1 |
| 6073011100 | 4.71 | 2.76 | 1-5% (lowest scores) | 3698 | San Diego | 11.1 | 73 | 15.9 | 11.6 | 81.5 | 0.9 | 0.3 | 2.7 | 3.1 |
| 6055201102 | 4.70 | 2.75 | 1-5% (lowest scores) | 2055 | Napa | 8.2 | 72.4 | 19.4 | 13 | 82.3 | 0.3 | 0.7 | 1.7 | 2.1 |
| 6037262302 | 4.70 | 2.74 | 1-5% (lowest scores) | 2818 | Los Angeles | 11.5 | 67.2 | 21.3 | 3.4 | 86.7 | 1 | 0.1 | 6.1 | 2.7 |
| 6037670413 | 4.67 | 2.72 | 1-5% (lowest scores) | 4782 | Los Angeles | 11.2 | 64.8 | 24 | 5.7 | 48.2 | 2.1 | 0.2 | 40.4 | 3.5 |
| 6059021920 | 4.67 | 2.71 | 1-5% (lowest scores) | 6892 | Orange | 12.8 | 72.2 | 15 | 13 | 62.1 | 1.5 | 0.1 | 19.4 | 3.9 |
| 6073010601 | 4.67 | 2.70 | 1-5% (lowest scores) | 2127 | San Diego | 9.3 | 61.9 | 28.8 | 20.8 | 72.1 | 1.2 | 0.4 | 3.1 | 2.5 |
| 6081612800 | 4.67 | 2.69 | 1-5% (lowest scores) | 3296 | San Mateo | 18.3 | 66.3 | 15.4 | 3.7 | 84.9 | 0.2 | 0.2 | 6.9 | 4.1 |
| 6081609900 | 4.66 | 2.67 | 1-5% (lowest scores) | 2944 | San Mateo | 13.3 | 69.5 | 17.2 | 13.4 | 78.1 | 0.3 | 0 | 5.4 | 2.6 |
| 6081609400 | 4.65 | 2.66 | 1-5% (lowest scores) | 3278 | San Mateo | 17.1 | 70.3 | 12.6 | 7 | 80.7 | 0.6 | 0 | 7 | 4.6 |

| | | | | | | | | | | | | | | |
|---|---|---|---|---|---|---|---|---|---|---|---|---|---|---|
| 6061021309 | 4.65 | 2.65 | 1-5% (lowest scores) | 9552 | Placer | 17.8 | 78.3 | 3.9 | 10.6 | 72.7 | 2 | 0.3 | 10.3 | 4.1 |
| 6037670602 | 4.65 | 2.64 | 1-5% (lowest scores) | 7345 | Los Angeles | 8.7 | 67.2 | 24.1 | 8.1 | 62.5 | 3 | 0.1 | 22.4 | 3.9 |
| 6001421500 | 4.62 | 2.62 | 1-5% (lowest scores) | 3640 | Alameda | 9.9 | 67.2 | 22.9 | 5.2 | 79.9 | 1.6 | 0.1 | 8.7 | 4.5 |
| 6001404300 | 4.61 | 2.61 | 1-5% (lowest scores) | 3218 | Alameda | 13.3 | 69.8 | 16.9 | 5.3 | 73.7 | 4.4 | 0.1 | 11.6 | 4.9 |
| 6019005520 | 4.61 | 2.60 | 1-5% (lowest scores) | 2698 | Fresno | 18.3 | 74 | 7.7 | 17 | 63.7 | 2.1 | 0.3 | 13.2 | 3.8 |
| 6075021300 | 4.61 | 2.59 | 1-5% (lowest scores) | 2474 | San Francisco | 11.2 | 79.3 | 9.5 | 7.9 | 76 | 0.8 | 0.2 | 10 | 5.1 |
| 6037670405 | 4.60 | 2.57 | 1-5% (lowest scores) | 2646 | Los Angeles | 8.5 | 58.3 | 33.2 | 4.1 | 56.2 | 2 | 0.2 | 33.6 | 3.9 |
| 6081610303 | 4.58 | 2.56 | 1-5% (lowest scores) | 7336 | San Mateo | 16.8 | 75.3 | 7.9 | 6.3 | 46.8 | 1.2 | 0.1 | 39.9 | 5.7 |
| 6041117000 | 4.57 | 2.55 | 1-5% (lowest scores) | 4527 | Marin | 12.5 | 72.4 | 15.1 | 6.1 | 83.9 | 0.7 | 0.2 | 5.6 | 3.5 |
| 6059042111 | 4.56 | 2.53 | 1-5% (lowest scores) | 5994 | Orange | 9 | 73.4 | 17.6 | 9.1 | 85.2 | 0.5 | 0.2 | 3.1 | 2 |
| 6085511913 | 4.53 | 2.52 | 1-5% (lowest scores) | 4295 | Santa Clara | 13.7 | 70.7 | 15.6 | 9.8 | 69.9 | 0.6 | 0.2 | 15.3 | 4.2 |
| 6037620301 | 4.53 | 2.51 | 1-5% (lowest scores) | 4657 | Los Angeles | 18 | 69.6 | 12.4 | 6.9 | 82.2 | 0.6 | 0.1 | 6.1 | 4.1 |
| 6041128100 | 4.52 | 2.50 | 1-5% (lowest scores) | 6505 | Marin | 14.2 | 72.2 | 13.6 | 5.3 | 83.5 | 1 | 0.1 | 6 | 4.1 |
| 6085510002 | 4.52 | 2.48 | 1-5% (lowest scores) | 3553 | Santa Clara | 14 | 68.4 | 17.6 | 4.7 | 64.5 | 0.3 | 0 | 25.7 | 4.8 |
| 6065045115 | 4.51 | 2.47 | 1-5% (lowest scores) | 2026 | Riverside | 4.7 | 48.4 | 46.9 | 5.6 | 90 | 0.8 | 0.1 | 2.1 | 1.3 |
| 6059032046 | 4.51 | 2.46 | 1-5% (lowest scores) | 6005 | Orange | 12.1 | 81 | 6.9 | 6.9 | 82.5 | 1.1 | 0.1 | 6.5 | 2.9 |
| 6013345103 | 4.49 | 2.45 | 1-5% (lowest scores) | 5062 | Contra Costa | 11.3 | 72.1 | 16.6 | 9.7 | 66.3 | 1.4 | 0.3 | 18.7 | 3.6 |
| 6001404501 | 4.49 | 2.43 | 1-5% (lowest scores) | 1677 | Alameda | 13 | 67.6 | 19.4 | 5.8 | 72.2 | 4.3 | 0.1 | 11.7 | 6 |
| 6085507100 | 4.46 | 2.42 | 1-5% (lowest scores) | 2683 | Santa Clara | 10.5 | 79.5 | 10 | 8.5 | 78.6 | 0.6 | 0.4 | 8.5 | 3.5 |
| 6083002010 | 4.45 | 2.41 | 1-5% (lowest scores) | 4375 | Santa Barbara | 10.9 | 74.7 | 14.4 | 20 | 71.9 | 1 | 0.6 | 4 | 2.6 |
| 6085507808 | 4.42 | 2.40 | 1-5% (lowest scores) | 5508 | Santa Clara | 13.4 | 75.5 | 11.1 | 2.5 | 21.7 | 0.4 | 0.1 | 72.6 | 2.7 |
| 6073008301 | 4.38 | 2.38 | 1-5% (lowest scores) | 3094 | San Diego | 8 | 54.6 | 37.4 | 7.6 | 83.9 | 0.9 | 0.2 | 4.9 | 2.4 |
| 6081609700 | 4.36 | 2.37 | 1-5% (lowest scores) | 4386 | San Mateo | 12.5 | 73.1 | 14.4 | 7.6 | 80.5 | 0.6 | 0.1 | 7.6 | 3.5 |
| 6017031800 | 4.34 | 2.36 | 1-5% (lowest scores) | 6798 | El Dorado | 20.9 | 73.3 | 5.8 | 10 | 65 | 2.5 | 0.3 | 17.7 | 4.5 |
| 6001404502 | 4.32 | 2.35 | 1-5% (lowest scores) | 5784 | Alameda | 14.3 | 69.9 | 15.8 | 6 | 72.1 | 6.3 | 0.3 | 9.6 | 5.8 |
| 6013345114 | 4.30 | 2.33 | 1-5% (lowest scores) | 6307 | Contra Costa | 10.4 | 68.8 | 20.8 | 5.4 | 83 | 0.8 | 0.1 | 8.3 | 2.5 |
| 6075020600 | 4.30 | 2.32 | 1-5% (lowest scores) | 4711 | San Francisco | 6.1 | 84.7 | 9.2 | 9.8 | 75.2 | 2.1 | 0.2 | 8.9 | 3.8 |
| 6061021123 | 4.29 | 2.31 | 1-5% (lowest scores) | 7397 | Placer | 11 | 72.4 | 16.6 | 8.8 | 80.9 | 0.7 | 0.5 | 5.8 | 3.3 |
| 6053013200 | 4.28 | 2.30 | 1-5% (lowest scores) | 4225 | Monterey | 8.4 | 67 | 24.6 | 6.4 | 82.2 | 0.9 | 0.4 | 7.2 | 2.9 |
| 6037620305 | 4.28 | 2.28 | 1-5% (lowest scores) | 6227 | Los Angeles | 11.3 | 78.5 | 10.2 | 5.9 | 85.3 | 0.5 | 0.1 | 4.8 | 3.2 |
| 6075021200 | 4.27 | 2.27 | 1-5% (lowest scores) | 2779 | San Francisco | 9.1 | 80.3 | 10.6 | 7.8 | 77 | 1 | 0.3 | 9.3 | 4.6 |
| 6085511707 | 4.27 | 2.26 | 1-5% (lowest scores) | 3009 | Santa Clara | 9.6 | 63.3 | 27.1 | 7.5 | 70.2 | 0.8 | 0.1 | 17.7 | 3.8 |
| 6075021800 | 4.26 | 2.24 | 1-5% (lowest scores) | 3840 | San Francisco | 11.1 | 77.2 | 11.7 | 14.4 | 69.4 | 1.7 | 0.1 | 10 | 4.4 |
| 6013345203 | 4.23 | 2.23 | 1-5% (lowest scores) | 6472 | Contra Costa | 10.9 | 71 | 18.1 | 8.1 | 82.5 | 0.6 | 0.2 | 5.5 | 3.1 |
| 6073017033 | 4.23 | 2.22 | 1-5% (lowest scores) | 4694 | San Diego | 11.8 | 79.9 | 8.3 | 8.6 | 55.3 | 2.6 | 0.1 | 28 | 5.4 |
| 6081612900 | 4.22 | 2.21 | 1-5% (lowest scores) | 4356 | San Mateo | 16.8 | 64.9 | 18.3 | 4.8 | 77.1 | 0.6 | 0 | 13.2 | 4.2 |
| 6085510200 | 4.22 | 2.19 | 1-5% (lowest scores) | 4328 | Santa Clara | 14.3 | 68.7 | 17 | 3.9 | 70 | 0.4 | 0.1 | 21 | 4.5 |
| 6087100100 | 4.22 | 2.18 | 1-5% (lowest scores) | 2163 | Santa Cruz | 11.1 | 75.8 | 13.1 | 14.3 | 76.2 | 0.7 | 0.4 | 4.6 | 3.7 |
| 6059062635 | 4.21 | 2.17 | 1-5% (lowest scores) | 4039 | Orange | 12.7 | 81.6 | 5.7 | 12.8 | 67.2 | 1.3 | 0.1 | 13.6 | 4.9 |
| 6041132100 | 4.20 | 2.16 | 1-5% (lowest scores) | 2311 | Marin | 7.6 | 73.7 | 18.7 | 12.7 | 81.2 | 0.6 | 0.2 | 1.6 | 3.8 |
| 6017030706 | 4.19 | 2.14 | 1-5% (lowest scores) | 6020 | El Dorado | 12.4 | 74.8 | 12.8 | 9.7 | 79 | 1.3 | 0.5 | 5.9 | 3.7 |
| 6083000502 | 4.18 | 2.13 | 1-5% (lowest scores) | 5874 | Santa Barbara | 10.8 | 70.9 | 18.3 | 13.6 | 80.6 | 0.5 | 0.1 | 2.9 | 2.2 |
| 6085507001 | 4.17 | 2.12 | 1-5% (lowest scores) | 6504 | Santa Clara | 9.5 | 70.5 | 20 | 5.2 | 84.5 | 0.6 | 0.2 | 6.9 | 2.5 |
| 6059042336 | 4.17 | 2.11 | 1-5% (lowest scores) | 4430 | Orange | 12.4 | 78.1 | 9.5 | 10.3 | 73.9 | 0.9 | 0.1 | 10.5 | 4.3 |
| 6061021106 | 4.15 | 2.09 | 1-5% (lowest scores) | 2230 | Placer | 8.9 | 72.3 | 18.8 | 8.7 | 82.5 | 1.1 | 0.7 | 3.9 | 3.2 |
| 6001430102 | 4.13 | 2.08 | 1-5% (lowest scores) | 2285 | Alameda | 8 | 70 | 22 | 10.2 | 67 | 2.8 | 0.4 | 14.8 | 4.8 |
| 6085508403 | 4.11 | 2.07 | 1-5% (lowest scores) | 2817 | Santa Clara | 13.3 | 64.1 | 22.6 | 3.8 | 60 | 0.7 | 0 | 30.6 | 4.9 |
| 6059042319 | 4.10 | 2.06 | 1-5% (lowest scores) | 3334 | Orange | 10.9 | 73.9 | 15.2 | 9.3 | 75 | 1.3 | 0.1 | 11 | 3.3 |
| 6053012401 | 4.10 | 2.04 | 1-5% (lowest scores) | 1682 | Monterey | 4.8 | 67.7 | 27.5 | 7.7 | 82.7 | 1 | 0.3 | 5.2 | 3.1 |
| 6073008303 | 4.10 | 2.03 | 1-5% (lowest scores) | 3446 | San Diego | 8.3 | 59.2 | 32.5 | 9.4 | 81.7 | 0.5 | 0.1 | 5.8 | 2.5 |
| 6087122002 | 4.09 | 2.02 | 1-5% (lowest scores) | 3349 | Santa Cruz | 8.6 | 77.1 | 14.3 | 7.2 | 86.1 | 0.8 | 0.4 | 2.8 | 2.6 |
| 6059032050 | 4.05 | 2.01 | 1-5% (lowest scores) | 4906 | Orange | 14.6 | 80.7 | 4.7 | 20.2 | 66.6 | 1.3 | 0.2 | 8 | 3.6 |
| 6067008509 | 4.05 | 1.99 | 1-5% (lowest scores) | 4711 | Sacramento | 19.9 | 73.7 | 6.4 | 8.3 | 66.7 | 1.5 | 0.5 | 18.6 | 4.4 |
| 6067008501 | 4.04 | 1.98 | 1-5% (lowest scores) | 6228 | Sacramento | 14.8 | 77.7 | 7.5 | 10.9 | 75.4 | 0.9 | 0.2 | 10 | 2.6 |
| 6013355112 | 4.04 | 1.97 | 1-5% (lowest scores) | 5563 | Contra Costa | 8.1 | 74.4 | 17.5 | 6.2 | 76.8 | 2.1 | 0.3 | 11.6 | 3.1 |
| 6065045123 | 4.04 | 1.95 | 1-5% (lowest scores) | 2356 | Riverside | 6.1 | 56.7 | 37.2 | 15.6 | 77.7 | 1.2 | 0.3 | 3.7 | 1.5 |
| 6089011402 | 4.03 | 1.94 | 1-5% (lowest scores) | 3350 | Shasta | 10.4 | 72.5 | 17.1 | 9 | 82.4 | 0.5 | 1 | 4.6 | 2.6 |
| 6041116000 | 4.03 | 1.93 | 1-5% (lowest scores) | 3070 | Marin | 13.3 | 74.8 | 11.9 | 5.4 | 87.8 | 0.7 | 0.3 | 2.2 | 3.6 |
| 6059032045 | 4.01 | 1.92 | 1-5% (lowest scores) | 2978 | Orange | 18 | 78.6 | 3.4 | 11.7 | 76.5 | 0.5 | 0 | 7.2 | 4.2 |
| 6073021500 | 4.00 | 1.90 | 1-5% (lowest scores) | 8846 | San Diego | 16.5 | 78.2 | 5.3 | 8.6 | 63.6 | 0.6 | 0.1 | 23.2 | 3.9 |
| 6059062631 | 3.98 | 1.89 | 1-5% (lowest scores) | 3303 | Orange | 7.3 | 72.5 | 20.2 | 3.5 | 66.4 | 0.6 | 0.1 | 24.2 | 5.2 |
| 6073008311 | 3.97 | 1.88 | 1-5% (lowest scores) | 2884 | San Diego | 10.1 | 65 | 24.9 | 8.6 | 82.6 | 0.2 | 0.1 | 5 | 3.5 |
| 6001400100 | 3.97 | 1.87 | 1-5% (lowest scores) | 2937 | Alameda | 9.3 | 69.1 | 21.6 | 4 | 70.8 | 4.8 | 0.1 | 15.8 | 4.6 |
| 6037670328 | 3.93 | 1.85 | 1-5% (lowest scores) | 4504 | Los Angeles | 9.3 | 68.9 | 21.8 | 5.6 | 70.4 | 1 | 0.1 | 19 | 3.8 |
| 6075030600 | 3.92 | 1.84 | 1-5% (lowest scores) | 2221 | San Francisco | 12.7 | 70.7 | 16.6 | 7.9 | 60.7 | 1.6 | 0 | 25.3 | 4.5 |
| 6041115000 | 3.92 | 1.83 | 1-5% (lowest scores) | 7249 | Marin | 13.4 | 72.3 | 14.3 | 4.9 | 88 | 0.8 | 0.2 | 3.5 | 2.5 |

| | | | | | | | | | | | | | | |
|---|---|---|---|---|---|---|---|---|---|---|---|---|---|---|
| 6013351101 | 3.91 | 1.82 | 1-5% (lowest scores) | 2594 | Contra Costa | 0 | 14.5 | 85.5 | 2 | 89.1 | 0.8 | 0 | 7.5 | 0.7 |
| 6001423800 | 3.90 | 1.80 | 1-5% (lowest scores) | 2925 | Alameda | 9.3 | 68.5 | 22.2 | 4.4 | 83.9 | 1.6 | 0.2 | 6.2 | 3.7 |
| 6001421300 | 3.90 | 1.79 | 1-5% (lowest scores) | 3844 | Alameda | 10.4 | 68 | 21.6 | 5.3 | 78.1 | 1.7 | 0.1 | 9.6 | 5.2 |
| 6017031405 | 3.89 | 1.78 | 1-5% (lowest scores) | 2426 | El Dorado | 9.4 | 72.9 | 17.7 | 5.7 | 89.5 | 0.2 | 1.1 | 0.8 | 2.7 |
| 6073008365 | 3.87 | 1.77 | 1-5% (lowest scores) | 2979 | San Diego | 10.7 | 82.4 | 6.9 | 5.9 | 52.2 | 1.5 | 0.1 | 37.3 | 2.9 |
| 6085509901 | 3.86 | 1.75 | 1-5% (lowest scores) | 1934 | Santa Clara | 14.6 | 64.2 | 21.2 | 4.4 | 72 | 0.2 | 0 | 19 | 4.4 |
| 6017030701 | 3.86 | 1.74 | 1-5% (lowest scores) | 6205 | El Dorado | 11.4 | 79.1 | 9.5 | 8.7 | 81.1 | 0.9 | 0.2 | 5.2 | 3.8 |
| 6085511701 | 3.86 | 1.73 | 1-5% (lowest scores) | 4017 | Santa Clara | 9.9 | 66.7 | 23.4 | 2.1 | 67.6 | 0.5 | 0 | 25.6 | 4.1 |
| 6041114100 | 3.85 | 1.72 | 1-5% (lowest scores) | 5133 | Marin | 10.3 | 77.6 | 12.1 | 5.9 | 86.6 | 1.2 | 0.3 | 2.5 | 3.4 |
| 6059032059 | 3.84 | 1.70 | 1-5% (lowest scores) | 7975 | Orange | 27 | 70.7 | 2.3 | 14.5 | 66.2 | 1.2 | 0.2 | 12.9 | 4.9 |
| 6053012800 | 3.84 | 1.69 | 1-5% (lowest scores) | 5154 | Monterey | 5.5 | 63.4 | 31.1 | 7.9 | 80.7 | 1.1 | 0.3 | 7.2 | 2.8 |
| 6085507206 | 3.83 | 1.68 | 1-5% (lowest scores) | 2724 | Santa Clara | 10.1 | 70.4 | 19.5 | 4.8 | 76.3 | 0.4 | 0.1 | 15.1 | 3.4 |
| 6067008505 | 3.82 | 1.66 | 1-5% (lowest scores) | 2186 | Sacramento | 15.1 | 75.5 | 9.4 | 6.2 | 72.7 | 0.6 | 0.4 | 16.2 | 3.9 |
| 6073017021 | 3.77 | 1.65 | 1-5% (lowest scores) | 3177 | San Diego | 9 | 79.6 | 11.4 | 7.2 | 82.9 | 0.8 | 0.3 | 6.6 | 2.2 |
| 6081608800 | 3.77 | 1.64 | 1-5% (lowest scores) | 5696 | San Mateo | 14.5 | 69.1 | 16.4 | 7 | 68.8 | 0.9 | 0.1 | 17.6 | 5.7 |
| 6083002915 | 3.76 | 1.63 | 1-5% (lowest scores) | 580 | Santa Barbara | 12.5 | 85.6 | 1.9 | 16.4 | 52.6 | 3.4 | 0.2 | 21.4 | 6 |
| 6013350000 | 3.74 | 1.61 | 1-5% (lowest scores) | 5512 | Contra Costa | 10.6 | 74.6 | 14.8 | 7.2 | 74.5 | 1.3 | 0.2 | 12 | 4.8 |
| 6073017006 | 3.73 | 1.60 | 1-5% (lowest scores) | 2876 | San Diego | 9.6 | 70.3 | 20.1 | 7.5 | 81.7 | 0.9 | 0.4 | 7.2 | 2.4 |
| 6013355117 | 3.72 | 1.59 | 1-5% (lowest scores) | 8379 | Contra Costa | 27.9 | 68.1 | 4 | 4.4 | 20.3 | 1.9 | 0.1 | 69.2 | 4.1 |
| 6037620901 | 3.72 | 1.58 | 1-5% (lowest scores) | 2621 | Los Angeles | 14.8 | 70.8 | 14.4 | 5.3 | 83.5 | 1 | 0.2 | 6.9 | 3 |
| 6073017501 | 3.72 | 1.56 | 1-5% (lowest scores) | 2769 | San Diego | 7.6 | 82.1 | 10.3 | 8.2 | 85.7 | 0.5 | 0.4 | 3.1 | 2.1 |
| 6059032043 | 3.70 | 1.55 | 1-5% (lowest scores) | 3987 | Orange | 11.3 | 83.1 | 5.6 | 8.5 | 79.8 | 0.9 | 0.1 | 7.8 | 2.9 |
| 6037670500 | 3.69 | 1.54 | 1-5% (lowest scores) | 1860 | Los Angeles | 7.8 | 64.6 | 27.6 | 5.5 | 74.1 | 1.5 | 0 | 16.3 | 2.6 |
| 6073017306 | 3.69 | 1.53 | 1-5% (lowest scores) | 2818 | San Diego | 8.2 | 67.3 | 24.5 | 5.5 | 85.7 | 0.8 | 0 | 5.9 | 2.1 |
| 6073017107 | 3.68 | 1.51 | 1-5% (lowest scores) | 2871 | San Diego | 12.3 | 80.6 | 7.1 | 7.2 | 83.1 | 0.3 | 0 | 6 | 3.4 |
| 6075021400 | 3.67 | 1.50 | 1-5% (lowest scores) | 3264 | San Francisco | 9.7 | 81.8 | 8.5 | 12 | 71.5 | 1.1 | 0.1 | 10.8 | 4.5 |
| 6085508303 | 3.65 | 1.49 | 1-5% (lowest scores) | 2562 | Santa Clara | 11.1 | 68.4 | 20.5 | 3.7 | 59.3 | 0.1 | 0.3 | 33.6 | 3 |
| 6073017044 | 3.60 | 1.48 | 1-5% (lowest scores) | 5570 | San Diego | 18.5 | 77.4 | 4.1 | 7.2 | 56 | 1.6 | 0.3 | 30.2 | 4.7 |
| 6067008512 | 3.57 | 1.46 | 1-5% (lowest scores) | 3819 | Sacramento | 22 | 72.7 | 5.3 | 8.9 | 66.4 | 1 | 0.1 | 19.9 | 3.7 |
| 6053013400 | 3.56 | 1.45 | 1-5% (lowest scores) | 1624 | Monterey | 9.5 | 71.5 | 19 | 10.4 | 76.2 | 0.8 | 0.4 | 8 | 4.2 |
| 6041118100 | 3.55 | 1.44 | 1-5% (lowest scores) | 2407 | Marin | 14.8 | 68 | 17.2 | 3.9 | 91.2 | 0.2 | 0 | 1.9 | 2.8 |
| 6013346203 | 3.55 | 1.43 | 1-5% (lowest scores) | 3838 | Contra Costa | 12.5 | 70.1 | 17.4 | 6.1 | 83.1 | 0.4 | 0.1 | 6.9 | 3.4 |
| 6085510500 | 3.53 | 1.41 | 1-5% (lowest scores) | 4688 | Santa Clara | 12.9 | 61 | 26.1 | 2.6 | 72.4 | 0.4 | 0 | 20.9 | 3.6 |
| 6075020500 | 3.50 | 1.40 | 1-5% (lowest scores) | 2583 | San Francisco | 5.8 | 84.4 | 9.8 | 7.4 | 77.4 | 1.7 | 0.3 | 9.1 | 4.1 |
| 6073008006 | 3.49 | 1.39 | 1-5% (lowest scores) | 3805 | San Diego | 7.2 | 79.8 | 13 | 9 | 83.6 | 0.7 | 0.2 | 3.3 | 3.2 |
| 6057001205 | 3.48 | 1.37 | 1-5% (lowest scores) | 4537 | Nevada | 13.4 | 80.9 | 5.7 | 5.1 | 91.3 | 0.2 | 0.4 | 1.2 | 1.8 |
| 6087122203 | 3.46 | 1.36 | 1-5% (lowest scores) | 3622 | Santa Cruz | 10.7 | 70.1 | 19.2 | 9.5 | 83.7 | 0.6 | 0.4 | 3.3 | 2.5 |
| 6085511705 | 3.46 | 1.35 | 1-5% (lowest scores) | 995 | Santa Clara | 10.5 | 68.4 | 21.1 | 4.6 | 66.7 | 2 | 0.1 | 22.8 | 3.7 |
| 6053012000 | 3.44 | 1.34 | 1-5% (lowest scores) | 3563 | Monterey | 11 | 72.7 | 16.3 | 18 | 67.9 | 1.5 | 0.5 | 8.3 | 3.8 |
| 6079010404 | 3.43 | 1.32 | 1-5% (lowest scores) | 2249 | San Luis Obispo | 8.7 | 62.1 | 29.2 | 28.4 | 68.3 | 0.4 | 0.2 | 1.1 | 1.6 |
| 6013326000 | 3.40 | 1.31 | 1-5% (lowest scores) | 3437 | Contra Costa | 12.9 | 66.8 | 20.3 | 7.8 | 81.6 | 0.8 | 0.1 | 6.3 | 3.4 |
| 6081609800 | 3.40 | 1.30 | 1-5% (lowest scores) | 4492 | San Mateo | 12.6 | 72.4 | 15 | 17.3 | 69.4 | 0.7 | 0.2 | 8.2 | 4.3 |
| 6061021204 | 3.36 | 1.29 | 1-5% (lowest scores) | 2482 | Placer | 9.2 | 74 | 16.8 | 9.3 | 84 | 0.7 | 1.4 | 2.1 | 2.6 |
| 6037920032 | 3.35 | 1.27 | 1-5% (lowest scores) | 2897 | Los Angeles | 15.4 | 79.5 | 5.1 | 21.9 | 57.6 | 4.6 | 0.1 | 12.6 | 3.2 |
| 6013345112 | 3.35 | 1.26 | 1-5% (lowest scores) | 6513 | Contra Costa | 16.2 | 77.2 | 6.6 | 8 | 48.9 | 3.4 | 0.2 | 34.8 | 4.7 |
| 6085510802 | 3.34 | 1.25 | 1-5% (lowest scores) | 1840 | Santa Clara | 12.8 | 64.9 | 22.3 | 4.4 | 63.7 | 2.1 | 0 | 25.5 | 4.2 |
| 6037670406 | 3.33 | 1.24 | 1-5% (lowest scores) | 1903 | Los Angeles | 9.5 | 69.6 | 20.9 | 3.8 | 46.8 | 1.4 | 0.1 | 43.9 | 4.1 |
| 6059063008 | 3.31 | 1.22 | 1-5% (lowest scores) | 857 | Orange | 3 | 54.9 | 42.1 | 5.8 | 87.9 | 0.8 | 0.1 | 4.6 | 0.8 |
| 6097153502 | 3.29 | 1.21 | 1-5% (lowest scores) | 3684 | Sonoma | 7.9 | 74.7 | 17.4 | 10.3 | 84.6 | 0.7 | 0.4 | 1.7 | 2.4 |
| 6053012402 | 3.29 | 1.20 | 1-5% (lowest scores) | 2987 | Monterey | 7.9 | 69.6 | 22.5 | 8.3 | 81.5 | 0.9 | 0.4 | 5.6 | 3.3 |
| 6053010702 | 3.29 | 1.19 | 1-5% (lowest scores) | 3911 | Monterey | 7.9 | 69.5 | 22.6 | 9.7 | 83.3 | 0.3 | 0.3 | 4 | 2.5 |
| 6061022011 | 3.28 | 1.17 | 1-5% (lowest scores) | 1686 | Placer | 10 | 78.6 | 11.4 | 10.6 | 85.1 | 0.2 | 0.2 | 2.2 | 1.7 |
| 6081605700 | 3.26 | 1.16 | 1-5% (lowest scores) | 5273 | San Mateo | 12.4 | 68.4 | 19.2 | 3 | 63.4 | 0.5 | 0 | 29.3 | 3.8 |
| 6081605800 | 3.24 | 1.15 | 1-5% (lowest scores) | 2640 | San Mateo | 12.5 | 69.4 | 18.1 | 7 | 78.1 | 0.7 | 0.1 | 10.6 | 3.4 |
| 6037800101 | 3.23 | 1.14 | 1-5% (lowest scores) | 5485 | Los Angeles | 10.8 | 73.4 | 15.8 | 5.4 | 84.4 | 1 | 0.2 | 5.7 | 3.4 |
| 6013355306 | 3.16 | 1.12 | 1-5% (lowest scores) | 4922 | Contra Costa | 9.9 | 74.2 | 15.9 | 9.9 | 81.2 | 1 | 0.3 | 4.4 | 3.2 |
| 6013353001 | 3.15 | 1.11 | 1-5% (lowest scores) | 3521 | Contra Costa | 11.5 | 72.6 | 15.9 | 5.3 | 75.9 | 1.1 | 0.1 | 13.8 | 3.9 |
| 6083002907 | 3.15 | 1.10 | 1-5% (lowest scores) | 4190 | Santa Barbara | 8.6 | 70.5 | 20.9 | 12.5 | 78.2 | 0.5 | 0.3 | 5.8 | 2.6 |
| 6037620904 | 3.14 | 1.08 | 1-5% (lowest scores) | 2888 | Los Angeles | 12.5 | 74.2 | 13.3 | 6.1 | 86.5 | 0.8 | 0 | 3.9 | 2.8 |
| 6053012200 | 3.13 | 1.07 | 1-5% (lowest scores) | 2683 | Monterey | 9.2 | 72.9 | 17.9 | 9.4 | 81.1 | 1.4 | 0.1 | 4.1 | 3.9 |
| 6001421400 | 3.11 | 1.06 | 1-5% (lowest scores) | 1593 | Alameda | 9.7 | 67.3 | 23 | 3.9 | 82.3 | 1.8 | 0.1 | 7.9 | 4 |
| 6085511910 | 3.10 | 1.05 | 1-5% (lowest scores) | 3042 | Santa Clara | 12.4 | 69.3 | 18.3 | 5.4 | 75 | 0.9 | 0.3 | 16.3 | 2.2 |
| 6053011700 | 3.08 | 1.03 | 1-5% (lowest scores) | 3810 | Monterey | 8.2 | 61 | 30.8 | 5.8 | 87.5 | 0.3 | 0.1 | 4.3 | 2 |
| 6061021604 | 3.06 | 1.02 | 1-5% (lowest scores) | 3161 | Placer | 8.6 | 68 | 23.4 | 8.2 | 88.3 | 0.2 | 0.8 | 1.2 | 1.3 |
| 6013355116 | 3.06 | 1.01 | 1-5% (lowest scores) | 5664 | Contra Costa | 25.7 | 70.5 | 3.8 | 4.3 | 23.4 | 1.8 | 0.1 | 65.5 | 4.9 |
| 6073017305 | 3.05 | 1.00 | 1-5% (lowest scores) | 2969 | San Diego | 10.2 | 63 | 26.8 | 5.8 | 85.6 | 0.4 | 0.3 | 5.4 | 2.5 |

| | | | | | | | | | | | | | | |
|---|---|---|---|---|---|---|---|---|---|---|---|---|---|---|
| 6061021122 | 3.04 | 0.98 | 1-5% (lowest scores) | 3463 | Placer | 11.4 | 67.4 | 21.2 | 8.5 | 80.2 | 1 | 0.1 | 7.5 | 2.7 |
| 6085511702 | 3.04 | 0.97 | 1-5% (lowest scores) | 2684 | Santa Clara | 13.2 | 66.6 | 20.2 | 2.8 | 69.2 | 0.6 | 0 | 22.8 | 4.6 |
| 6079010403 | 3.02 | 0.96 | 1-5% (lowest scores) | 3788 | San Luis Obispo | 6.6 | 60.2 | 33.2 | 14.6 | 81.6 | 0.2 | 0.6 | 1.7 | 1.3 |
| 6075060100 | 2.98 | 0.95 | 1-5% (lowest scores) | 3235 | San Francisco | 16.2 | 81.6 | 2.2 | 7.7 | 76 | 2 | 0.2 | 8.5 | 5.4 |
| 6073017047 | 2.95 | 0.93 | 1-5% (lowest scores) | 4021 | San Diego | 14.6 | 75 | 10.4 | 9.2 | 74.8 | 1.4 | 0.2 | 10.7 | 3.7 |
| 6073007200 | 2.94 | 0.92 | 1-5% (lowest scores) | 5493 | San Diego | 7.3 | 77.4 | 15.3 | 7.5 | 86.7 | 1 | 0.2 | 2.3 | 2.4 |
| 6013346201 | 2.93 | 0.91 | 1-5% (lowest scores) | 7181 | Contra Costa | 10.8 | 71.1 | 18.1 | 5 | 85.4 | 0.5 | 0.1 | 6.1 | 3 |
| 6073008310 | 2.90 | 0.90 | 1-5% (lowest scores) | 5392 | San Diego | 10.1 | 60.8 | 29.1 | 9.3 | 79 | 0.6 | 0.1 | 7.7 | 3.4 |
| 6085510300 | 2.89 | 0.88 | 1-5% (lowest scores) | 4020 | Santa Clara | 13 | 66.5 | 20.5 | 3.6 | 72.1 | 0.4 | 0 | 20.5 | 3.3 |
| 6073017200 | 2.89 | 0.87 | 1-5% (lowest scores) | 4146 | San Diego | 6 | 73.2 | 20.8 | 4.2 | 90.6 | 0.2 | 0 | 2.8 | 2.1 |
| 6041124100 | 2.89 | 0.86 | 1-5% (lowest scores) | 5441 | Marin | 14.1 | 69 | 16.9 | 5.3 | 83.4 | 0.9 | 0.1 | 6.3 | 4 |
| 6097151503 | 2.86 | 0.84 | 1-5% (lowest scores) | 3572 | Sonoma | 7.9 | 71.6 | 20.5 | 4.9 | 89.5 | 0.3 | 0.3 | 3 | 2.1 |
| 6041114200 | 2.81 | 0.83 | 1-5% (lowest scores) | 3087 | Marin | 11.1 | 73.6 | 15.3 | 7.5 | 84.5 | 1.4 | 0.2 | 3.2 | 3.2 |
| 6053012302 | 2.79 | 0.82 | 1-5% (lowest scores) | 1872 | Monterey | 8.1 | 75.1 | 16.8 | 9.1 | 81.5 | 1.7 | 0.6 | 4.5 | 2.6 |
| 6083000501 | 2.78 | 0.81 | 1-5% (lowest scores) | 3263 | Santa Barbara | 8.2 | 68.9 | 22.9 | 8.3 | 87.1 | 0.4 | 0.2 | 2.1 | 1.9 |
| 6059032058 | 2.75 | 0.79 | 1-5% (lowest scores) | 7312 | Orange | 27.8 | 69.9 | 2.3 | 11.4 | 71 | 1.4 | 0.1 | 12.1 | 4 |
| 6089011801 | 2.72 | 0.78 | 1-5% (lowest scores) | 2464 | Shasta | 10.1 | 72.7 | 17.2 | 6.2 | 87.1 | 0.7 | 1.7 | 1.4 | 3 |
| 6073008336 | 2.72 | 0.77 | 1-5% (lowest scores) | 2332 | San Diego | 11.2 | 80.8 | 8 | 7.9 | 65.4 | 1.2 | 0.3 | 21.3 | 4 |
| 6017030709 | 2.71 | 0.76 | 1-5% (lowest scores) | 4806 | El Dorado | 12.8 | 77 | 10.2 | 7.2 | 82.9 | 1.1 | 0.5 | 4.9 | 3.3 |
| 6017031700 | 2.71 | 0.74 | 1-5% (lowest scores) | 2648 | El Dorado | 19 | 73.1 | 7.9 | 6.2 | 75.8 | 1.6 | 0.4 | 12.7 | 3.3 |
| 6013352202 | 2.70 | 0.73 | 1-5% (lowest scores) | 2548 | Contra Costa | 7.7 | 63.8 | 28.5 | 3.9 | 76.7 | 0.4 | 0.1 | 14.8 | 4.2 |
| 6059032042 | 2.70 | 0.72 | 1-5% (lowest scores) | 5796 | Orange | 10.6 | 85.2 | 4.2 | 10.9 | 78.7 | 1.2 | 0.2 | 5.4 | 3.5 |
| 6081609602 | 2.69 | 0.71 | 1-5% (lowest scores) | 1667 | San Mateo | 13.3 | 69.3 | 17.4 | 8 | 73.4 | 0.7 | 0.1 | 12.2 | 5.5 |
| 6037621002 | 2.66 | 0.69 | 1-5% (lowest scores) | 1093 | Los Angeles | 7.5 | 80.4 | 12.1 | 6.9 | 84.7 | 1.4 | 0.2 | 3.2 | 3.7 |
| 6013355114 | 2.63 | 0.68 | 1-5% (lowest scores) | 11035 | Contra Costa | 18.8 | 74.1 | 7.1 | 7.1 | 47.4 | 2 | 0.1 | 39 | 4.5 |
| 6085507002 | 2.63 | 0.67 | 1-5% (lowest scores) | 2800 | Santa Clara | 11.3 | 69.7 | 19 | 4.2 | 84.6 | 0.6 | 0 | 6.7 | 3.8 |
| 6013391000 | 2.62 | 0.66 | 1-5% (lowest scores) | 2556 | Contra Costa | 10.4 | 67.2 | 22.4 | 5.8 | 74.8 | 2.5 | 0.1 | 11.8 | 5 |
| 6075012901 | 2.59 | 0.64 | 1-5% (lowest scores) | 2557 | San Francisco | 4.1 | 86.5 | 9.4 | 6.2 | 76.8 | 0.8 | 0.1 | 13.5 | 2.7 |
| 6081611500 | 2.59 | 0.63 | 1-5% (lowest scores) | 2677 | San Mateo | 12.6 | 65.9 | 21.5 | 3 | 78.9 | 0.3 | 0.1 | 14.2 | 3.5 |
| 6061020606 | 2.56 | 0.62 | 1-5% (lowest scores) | 4303 | Placer | 10.4 | 82.8 | 6.8 | 5.2 | 76.9 | 1.1 | 0.3 | 12.5 | 4.1 |
| 6085510100 | 2.54 | 0.61 | 1-5% (lowest scores) | 2948 | Santa Clara | 13.2 | 64.4 | 22.4 | 4.9 | 67.6 | 0.3 | 0.1 | 23.1 | 3.9 |
| 6001426100 | 2.52 | 0.59 | 1-5% (lowest scores) | 5922 | Alameda | 12.3 | 69.1 | 18.6 | 3.3 | 72.8 | 1.2 | 0.1 | 18.1 | 4.6 |
| 6013353002 | 2.49 | 0.58 | 1-5% (lowest scores) | 4078 | Contra Costa | 12.3 | 67.4 | 20.3 | 4.9 | 78.7 | 0.5 | 0.2 | 11.7 | 4 |
| 6053011802 | 2.44 | 0.57 | 1-5% (lowest scores) | 1830 | Monterey | 5.1 | 53.8 | 41.1 | 3.1 | 91.6 | 0.1 | 0.2 | 3.3 | 1.7 |
| 6013355113 | 2.44 | 0.55 | 1-5% (lowest scores) | 4985 | Contra Costa | 11.4 | 79.2 | 9.4 | 5.3 | 64.9 | 1.8 | 0.2 | 23.7 | 4.2 |
| 6053012100 | 2.44 | 0.54 | 1-5% (lowest scores) | 2263 | Monterey | 7.6 | 59.8 | 32.6 | 7.7 | 80.8 | 1.1 | 0.1 | 6.8 | 3.4 |
| 6083001500 | 2.35 | 0.53 | 1-5% (lowest scores) | 3091 | Santa Barbara | 8.3 | 61.4 | 30.3 | 5.5 | 90.9 | 0.4 | 0.1 | 1.7 | 1.4 |
| 6041127000 | 2.34 | 0.52 | 1-5% (lowest scores) | 4579 | Marin | 13.8 | 69.9 | 16.3 | 4.4 | 87.9 | 0.7 | 0.1 | 3.6 | 3.3 |
| 6075020401 | 2.31 | 0.50 | 1-5% (lowest scores) | 2846 | San Francisco | 5 | 85.3 | 9.7 | 7.4 | 75.7 | 2 | 0.1 | 11.2 | 3.6 |
| 6055201403 | 2.29 | 0.49 | 1-5% (lowest scores) | 800 | Napa | 7.9 | 73.8 | 18.3 | 17.8 | 77.4 | 1.2 | 0.4 | 1.9 | 1.4 |
| 6081612700 | 2.26 | 0.48 | 1-5% (lowest scores) | 2202 | San Mateo | 15.5 | 65.6 | 18.9 | 4.2 | 85 | 0.1 | 0 | 7.7 | 3 |
| 6083000103 | 2.21 | 0.47 | 1-5% (lowest scores) | 3196 | Santa Barbara | 8.6 | 67.8 | 23.6 | 9.1 | 84.3 | 0.2 | 0.1 | 4.1 | 2.2 |
| 6053013100 | 2.20 | 0.45 | 1-5% (lowest scores) | 1930 | Monterey | 33.4 | 66.4 | 0.2 | 7 | 72.3 | 5.3 | 0.1 | 10.4 | 4.9 |
| 6013346102 | 2.18 | 0.44 | 1-5% (lowest scores) | 5650 | Contra Costa | 10.3 | 71.3 | 18.4 | 5.8 | 80.8 | 0.6 | 0 | 9.8 | 2.9 |
| 6059062642 | 2.18 | 0.43 | 1-5% (lowest scores) | 2832 | Orange | 7.6 | 54.2 | 38.2 | 3.1 | 89.5 | 0.4 | 0 | 5.2 | 1.7 |
| 6013352101 | 2.18 | 0.42 | 1-5% (lowest scores) | 3141 | Contra Costa | 6.6 | 77.5 | 15.9 | 10.2 | 67.4 | 3.6 | 0.2 | 13.3 | 5.2 |
| 6013346204 | 2.17 | 0.40 | 1-5% (lowest scores) | 7278 | Contra Costa | 13.4 | 76.5 | 10.1 | 6 | 75.9 | 0.7 | 0.2 | 12.5 | 4.7 |
| 6013345204 | 2.17 | 0.39 | 1-5% (lowest scores) | 3586 | Contra Costa | 12.9 | 70 | 17.1 | 5 | 87.2 | 0.2 | 0.1 | 5.1 | 2.5 |
| 6041102100 | 2.12 | 0.38 | 1-5% (lowest scores) | 2295 | Marin | 9 | 74.3 | 16.7 | 8.9 | 81.1 | 1.1 | 0.3 | 5.4 | 3.2 |
| 6073008324 | 2.11 | 0.37 | 1-5% (lowest scores) | 6600 | San Diego | 9.3 | 70.4 | 20.3 | 5.5 | 82.5 | 0.7 | 0.1 | 7.9 | 3.3 |
| 6001404600 | 2.05 | 0.35 | 1-5% (lowest scores) | 4353 | Alameda | 11.5 | 71.2 | 17.3 | 5.5 | 73 | 6 | 0.1 | 10.3 | 5.1 |
| 6001421600 | 2.04 | 0.34 | 1-5% (lowest scores) | 3558 | Alameda | 8.4 | 67.5 | 24.1 | 5.3 | 77.2 | 1.6 | 0.1 | 10.5 | 5.4 |
| 6085507302 | 1.98 | 0.33 | 1-5% (lowest scores) | 2725 | Santa Clara | 9.5 | 67.2 | 23.3 | 4.4 | 70.5 | 0.3 | 0.1 | 21.2 | 3.5 |
| 6013354002 | 1.98 | 0.32 | 1-5% (lowest scores) | 6590 | Contra Costa | 11.5 | 63.8 | 24.7 | 3.7 | 82.9 | 0.7 | 0 | 8.9 | 3.8 |
| 6085510400 | 1.93 | 0.30 | 1-5% (lowest scores) | 3131 | Santa Clara | 14 | 68.2 | 17.8 | 4.8 | 63.1 | 0.5 | 0.1 | 27.1 | 4.4 |
| 6041113000 | 1.85 | 0.29 | 1-5% (lowest scores) | 3656 | Marin | 9.3 | 75.9 | 14.8 | 6.5 | 87.8 | 0.8 | 0.2 | 1.3 | 3.4 |
| 6013347000 | 1.85 | 0.28 | 1-5% (lowest scores) | 6171 | Contra Costa | 10.5 | 72.1 | 17.4 | 6.6 | 77.9 | 1.4 | 0.1 | 10.1 | 3.9 |
| 6013346101 | 1.81 | 0.26 | 1-5% (lowest scores) | 3433 | Contra Costa | 9.8 | 70.5 | 19.7 | 5.2 | 79.1 | 0.9 | 0.1 | 12.1 | 2.5 |
| 6001400200 | 1.81 | 0.25 | 1-5% (lowest scores) | 1974 | Alameda | 12 | 71.6 | 16.4 | 7.6 | 78.3 | 1.6 | 0.1 | 7.4 | 5 |
| 6013345113 | 1.76 | 0.24 | 1-5% (lowest scores) | 4337 | Contra Costa | 13.1 | 77.4 | 9.5 | 5.9 | 68.1 | 1.2 | 0 | 20.9 | 3.9 |
| 6001421200 | 1.75 | 0.23 | 1-5% (lowest scores) | 3563 | Alameda | 9 | 66.9 | 24.1 | 5.4 | 79.7 | 2 | 0 | 8.4 | 4.4 |
| 6085506804 | 1.75 | 0.21 | 1-5% (lowest scores) | 3629 | Santa Clara | 15 | 70 | 15 | 6.9 | 75.5 | 0.3 | 0.2 | 13.3 | 3.9 |
| 6013352201 | 1.73 | 0.20 | 1-5% (lowest scores) | 5750 | Contra Costa | 11.8 | 70.2 | 18 | 6.4 | 70.9 | 1.2 | 0.1 | 17.4 | 4 |
| 6073008331 | 1.72 | 0.19 | 1-5% (lowest scores) | 2466 | San Diego | 13.5 | 79.8 | 6.7 | 5.9 | 76.7 | 0.4 | 0 | 13.5 | 3.5 |
| 6061020105 | 1.72 | 0.18 | 1-5% (lowest scores) | 1352 | Placer | 7.7 | 76.8 | 15.5 | 3.6 | 90.7 | 0.4 | 0.7 | 2 | 2.6 |
| 6059042332 | 1.66 | 0.16 | 1-5% (lowest scores) | 5399 | Orange | 9.9 | 74.8 | 15.3 | 6.9 | 82.6 | 0.7 | 0 | 7.1 | 2.6 |

| | | | | | | | | | | | | | | | |
|---|---|---|---|---|---|---|---|---|---|---|---|---|---|---|---|
| 6013351200 | 1.64 | 0.15 | 1-5% (lowest scores) | 5812 | Contra Costa | 12.8 | 70.5 | 16.7 | 4.6 | 83.5 | 0.4 | 0.2 | 7.9 | 3.5 |
| 6001421100 | 1.47 | 0.14 | 1-5% (lowest scores) | 1992 | Alameda | 9.5 | 63.3 | 27.2 | 5 | 76.5 | 1.8 | 0 | 12 | 4.6 |
| 6041119100 | 1.45 | 0.13 | 1-5% (lowest scores) | 4609 | Marin | 11.4 | 68.7 | 19.9 | 5.1 | 88.4 | 0.4 | 0.1 | 3.1 | 2.9 |
| 6053011604 | 1.42 | 0.11 | 1-5% (lowest scores) | 1913 | Monterey | 4.2 | 56.8 | 39 | 5 | 88.9 | 0.7 | 0.1 | 3.1 | 2.3 |
| 6041126100 | 1.39 | 0.10 | 1-5% (lowest scores) | 5808 | Marin | 15.4 | 69.4 | 15.2 | 4 | 88.7 | 0.4 | 0 | 3.3 | 3.6 |
| 6037262802 | 1.31 | 0.09 | 1-5% (lowest scores) | 3759 | Los Angeles | 13.1 | 65.5 | 21.4 | 3.6 | 88.8 | 0.7 | 0.1 | 4.2 | 2.7 |
| 6097154303 | 1.28 | 0.08 | 1-5% (lowest scores) | 1720 | Sonoma | 5 | 55.5 | 39.5 | 9.2 | 86.5 | 0.9 | 0.6 | 1 | 1.7 |
| 6053011602 | 1.26 | 0.06 | 1-5% (lowest scores) | 5266 | Monterey | 5.6 | 53.8 | 40.6 | 4.9 | 87.6 | 0.6 | 0.2 | 4.7 | 2 |
| 6053011801 | 1.16 | 0.05 | 1-5% (lowest scores) | 1885 | Monterey | 6.3 | 63.3 | 30.4 | 6.2 | 88.4 | 0.4 | 0.2 | 2.7 | 2.1 |
| 6073008102 | 1.09 | 0.04 | 1-5% (lowest scores) | 3395 | San Diego | 12.1 | 70.8 | 17.1 | 6.7 | 86.3 | 0.4 | 0.2 | 3.2 | 3.2 |
| 6013352102 | 1.06 | 0.03 | 1-5% (lowest scores) | 5586 | Contra Costa | 10.1 | 73.3 | 16.6 | 7.3 | 74.8 | 1.3 | 0.1 | 12.2 | 4.3 |
| 6013392000 | 0.98 | 0.01 | 1-5% (lowest scores) | 2451 | Contra Costa | 11.5 | 66.7 | 21.8 | 4.6 | 74.8 | 2.4 | 0 | 12 | 6.2 |
| 6001422600 | NA | NA | NA | 1215 | Alameda | 0.1 | 99.3 | 0.6 | 11.6 | 44.3 | 0.8 | 0.2 | 37.5 | 5.6 |
| 6001981900 | NA | NA | NA | 38 | Alameda | 0 | 100 | 0 | 10.5 | 63.2 | 10.5 | 0 | 10.5 | 5.3 |
| 6001982000 | NA | NA | NA | 71 | Alameda | 1.4 | 95.8 | 2.8 | 15.5 | 64.8 | 4.2 | 1.4 | 12.7 | 1.4 |
| 6001983200 | NA | NA | NA | 540 | Alameda | 2.6 | 92.4 | 5 | 10.7 | 53.5 | 13.9 | 0.6 | 17.6 | 3.7 |
| 6009000504 | NA | NA | NA | 942 | Calaveras | 6.5 | 69.6 | 23.9 | 6.3 | 88.7 | 0.1 | 0.2 | 1.7 | 3 |
| 6017031900 | NA | NA | NA | 133 | El Dorado | 6.8 | 72.1 | 21.1 | 4.5 | 79.7 | 0 | 1.5 | 7.5 | 6.8 |
| 6019007901 | NA | NA | NA | 5652 | Fresno | 0 | 95.9 | 4.1 | 36.9 | 33.3 | 26.7 | 0.9 | 0.8 | 1.4 |
| 6025010101 | NA | NA | NA | 4601 | Imperial | 0.8 | 96.3 | 2.9 | 45.1 | 19 | 32.8 | 0.7 | 1.9 | 0.6 |
| 6029003900 | NA | NA | NA | 2250 | Kern | 4.6 | 92.2 | 3.2 | 47.2 | 36.2 | 13.6 | 0.4 | 1.1 | 1.4 |
| 6029004302 | NA | NA | NA | 5710 | Kern | 0 | 99.5 | 0.5 | 46 | 28.4 | 23 | 0.9 | 0.7 | 1 |
| 6029004601 | NA | NA | NA | 5363 | Kern | 0 | 99.1 | 0.9 | 37.2 | 26.7 | 35.4 | 0.4 | 0 | 0.2 |
| 6029004603 | NA | NA | NA | 490 | Kern | 0 | 100 | 0 | 58.2 | 21.2 | 20.2 | 0.4 | 0 | 0 |
| 6029006002 | NA | NA | NA | 5906 | Kern | 0 | 98.8 | 1.2 | 47.2 | 31.9 | 19.1 | 0.6 | 0.9 | 0.4 |
| 6031001602 | NA | NA | NA | 12118 | Kings | 0 | 97.5 | 2.5 | 45 | 24.6 | 26.4 | 0.7 | 0.4 | 3 |
| 6031981800 | NA | NA | NA | 6423 | Kings | 0 | 96.8 | 3.2 | 44.3 | 27.6 | 23.2 | 0.9 | 0.8 | 3.2 |
| 6037207400 | NA | NA | NA | 1363 | Los Angeles | 0.2 | 95.8 | 4 | 48.3 | 20.6 | 21.9 | 0.3 | 7.3 | 1.5 |
| 6037265301 | NA | NA | NA | 9344 | Los Angeles | 0 | 100 | 0 | 15.2 | 31.6 | 3.2 | 0 | 43.6 | 6.4 |
| 6037320000 | NA | NA | NA | 0 | Los Angeles | 0 | 100 | 0 | NA | NA | NA | NA | NA | NA |
| 6037402404 | NA | NA | NA | 1945 | Los Angeles | 0.1 | 99.8 | 0.1 | 24.2 | 42.4 | 6.2 | 0.1 | 19.8 | 7.4 |
| 6037403200 | NA | NA | NA | 391 | Los Angeles | 0 | 90.3 | 9.7 | 18.4 | 69.1 | 7.4 | 0 | 4.6 | 0.5 |
| 6037504102 | NA | NA | NA | 22 | Los Angeles | 9 | 91 | 0 | 31.8 | 22.7 | 27.3 | 0 | 18.2 | 0 |
| 6037532400 | NA | NA | NA | 112 | Los Angeles | 4.5 | 83 | 12.5 | 42.9 | 51.8 | 3.6 | 0 | 1.8 | 0 |
| 6037551600 | NA | NA | NA | 31 | Los Angeles | 0 | 100 | 0 | 35.5 | 16.1 | 38.7 | 0 | 9.7 | 0 |
| 6037574601 | NA | NA | NA | 1863 | Los Angeles | 0.4 | 99.3 | 0.3 | 22.1 | 48.9 | 5.9 | 0.2 | 16 | 6.9 |
| 6037574700 | NA | NA | NA | 117 | Los Angeles | 0 | 53 | 47 | 10.3 | 53.8 | 30.8 | 0 | 5.1 | 0 |
| 6037575500 | NA | NA | NA | 76 | Los Angeles | 10.5 | 76.3 | 13.2 | 50 | 30.3 | 5.3 | 0 | 14.5 | 0 |
| 6037599100 | NA | NA | NA | 527 | Los Angeles | 8.9 | 89.2 | 1.9 | 30 | 65.1 | 0.4 | 0.2 | 2.3 | 2.1 |
| 6037701100 | NA | NA | NA | 746 | Los Angeles | 6 | 75.2 | 18.8 | 10.7 | 40.5 | 44 | 0.3 | 2.5 | 2 |
| 6037901003 | NA | NA | NA | 6188 | Los Angeles | 0 | 99.2 | 0.8 | 48.1 | 14.1 | 30.9 | 0.5 | 2 | 4.5 |
| 6037910811 | NA | NA | NA | 305 | Los Angeles | 4.2 | 86 | 9.8 | 28.9 | 58.4 | 7.9 | 2 | 1 | 2 |
| 6037910812 | NA | NA | NA | 464 | Los Angeles | 7.3 | 80.8 | 11.9 | 10.8 | 81 | 0.2 | 0.9 | 0.9 | 6.2 |
| 6037920011 | NA | NA | NA | 286 | Los Angeles | 5.9 | 86.1 | 8 | 24.5 | 62.9 | 8.7 | 0 | 1 | 2.8 |
| 6037920026 | NA | NA | NA | 419 | Los Angeles | 5 | 76.4 | 18.6 | 19.8 | 74.5 | 0 | 1 | 2.6 | 2.1 |
| 6037920200 | NA | NA | NA | 6920 | Los Angeles | 0 | 99.8 | 0.2 | 59.4 | 9.9 | 29.5 | 0 | 0.4 | 0.8 |
| 6037930101 | NA | NA | NA | 119 | Los Angeles | 5.1 | 86.5 | 8.4 | 20.2 | 67.2 | 2.5 | 0 | 10.1 | 0 |
| 6037980001 | NA | NA | NA | 0 | Los Angeles | 0 | 100 | 0 | NA | NA | NA | NA | NA | NA |
| 6037980002 | NA | NA | NA | 0 | Los Angeles | 0 | 100 | 0 | NA | NA | NA | NA | NA | NA |
| 6037980003 | NA | NA | NA | 2 | Los Angeles | 0 | 0 | 100 | 0 | 100 | 0 | 0 | 0 | 0 |
| 6037980004 | NA | NA | NA | 169 | Los Angeles | 18.9 | 78.1 | 3 | 39.1 | 46.7 | 8.9 | 0.6 | 1.2 | 3.6 |
| 6037980005 | NA | NA | NA | 0 | Los Angeles | 0 | 100 | 0 | NA | NA | NA | NA | NA | NA |
| 6037980006 | NA | NA | NA | 0 | Los Angeles | 0 | 100 | 0 | NA | NA | NA | NA | NA | NA |
| 6037980007 | NA | NA | NA | 0 | Los Angeles | 0 | 100 | 0 | NA | NA | NA | NA | NA | NA |
| 6037980008 | NA | NA | NA | 145 | Los Angeles | 26.2 | 67.6 | 6.2 | 78.6 | 19.3 | 2.1 | 0 | 0 | 0 |
| 6037980009 | NA | NA | NA | 14 | Los Angeles | 7.1 | 85.8 | 7.1 | 35.7 | 57.1 | 0 | 0 | 0 | 7.1 |
| 6037980013 | NA | NA | NA | 59 | Los Angeles | 40.6 | 57.7 | 1.7 | 79.7 | 11.9 | 5.1 | 0 | 3.4 | 0 |
| 6037980014 | NA | NA | NA | 239 | Los Angeles | 1.7 | 75.7 | 22.6 | 13.4 | 76.6 | 5 | 0 | 3.3 | 1.7 |
| 6037980015 | NA | NA | NA | 554 | Los Angeles | 14.9 | 83.3 | 1.8 | 48.9 | 19.7 | 17.3 | 0.5 | 10.5 | 3.1 |
| 6037980018 | NA | NA | NA | 1 | Los Angeles | 0 | 0 | 100 | 0 | 100 | 0 | 0 | 0 | 0 |
| 6037980019 | NA | NA | NA | 173 | Los Angeles | 8.1 | 72.2 | 19.7 | 15.6 | 71.1 | 1.7 | 0 | 8.7 | 2.9 |
| 6037980020 | NA | NA | NA | 0 | Los Angeles | 0 | 100 | 0 | NA | NA | NA | NA | NA | NA |
| 6037980021 | NA | NA | NA | 33 | Los Angeles | 9.1 | 87.9 | 3 | 6.1 | 57.6 | 0 | 0 | 27.3 | 9.1 |
| 6037980022 | NA | NA | NA | 4 | Los Angeles | 0 | 100 | 0 | 25 | 75 | 0 | 0 | 0 | 0 |
| 6037980023 | NA | NA | NA | 8 | Los Angeles | 0 | 87.5 | 12.5 | 25 | 50 | 0 | 0 | 0 | 25 |
| 6037980024 | NA | NA | NA | 186 | Los Angeles | 12.9 | 71 | 16.1 | 12.4 | 72.6 | 1.6 | 0 | 10.8 | 2.7 |

| | | | | | | | | | | | | | | | | |
|---|---|---|---|---|---|---|---|---|---|---|---|---|---|---|---|---|
| 6037980025 | NA | NA | NA | 0 | Los Angeles | 0 | 100 | 0 | NA | NA | NA | NA | NA | NA | | |
| 6037980026 | NA | NA | NA | 20 | Los Angeles | 0 | 90 | 10 | 5 | 85 | 0 | 0 | 0 | 10 | | |
| 6037980028 | NA | NA | NA | 4 | Los Angeles | 0 | 75 | 25 | 50 | 0 | 50 | 0 | 0 | 0 | | |
| 6037980030 | NA | NA | NA | 0 | Los Angeles | 0 | 100 | 0 | NA | NA | NA | NA | NA | NA | | |
| 6037980031 | NA | NA | NA | 1262 | Los Angeles | 0.4 | 89.5 | 10.1 | 30.9 | 40.6 | 17.5 | 1.9 | 5.9 | 3.2 | | |
| 6037980033 | NA | NA | NA | 61 | Los Angeles | 0 | 80.3 | 19.7 | 13.1 | 57.4 | 4.9 | 0 | 19.7 | 4.9 | | |
| 6041122000 | NA | NA | NA | 4854 | Marin | 0 | 98.3 | 1.7 | 19.7 | 32.4 | 40.5 | 2 | 1.3 | 4.1 | | |
| 6043000400 | NA | NA | NA | 1802 | Mariposa | 6.3 | 88.4 | 5.3 | 9.5 | 80.6 | 1.7 | 2.1 | 2.7 | 3.4 | | |
| 6053010900 | NA | NA | NA | 10109 | Monterey | 0 | 97.4 | 2.6 | 43.9 | 23.2 | 26.8 | 1 | 4.4 | 0.6 | | |
| 6053011502 | NA | NA | NA | 1710 | Monterey | 7.7 | 79 | 13.3 | 22.5 | 73.9 | 0.2 | 0.4 | 1.4 | 1.7 | | |
| 6053012600 | NA | NA | NA | 2254 | Monterey | 1.7 | 97.8 | 0.5 | 8.7 | 77 | 4.9 | 0.6 | 3.5 | 5.3 | | |
| 6053014104 | NA | NA | NA | 1611 | Monterey | 0 | 100 | 0 | 20.3 | 47.8 | 3.3 | 0.6 | 25.2 | 2.9 | | |
| 6053980000 | NA | NA | NA | 7 | Monterey | 0 | 100 | 0 | 100 | 0 | 0 | 0 | 0 | 0 | | |
| 6055200900 | NA | NA | NA | 1230 | Napa | 0.4 | 92.9 | 6.7 | 18.4 | 52 | 21.8 | 1.1 | 6.2 | 0.6 | | |
| 6059021813 | NA | NA | NA | 25 | Orange | 0 | 76 | 24 | 20 | 44 | 0 | 0 | 36 | 0 | | |
| 6059052404 | NA | NA | NA | 549 | Orange | 0.4 | 99.2 | 0.4 | 56.3 | 32.2 | 4 | 0.2 | 6.7 | 0.5 | | |
| 6059980000 | NA | NA | NA | 19 | Orange | 0 | 94.7 | 5.3 | 10.5 | 57.9 | 5.3 | 0 | 26.3 | 0 | | |
| 6061022200 | NA | NA | NA | 909 | Placer | 7.6 | 81.9 | 10.5 | 8 | 88.9 | 0.3 | 0.2 | 1 | 1.5 | | |
| 6065043814 | NA | NA | NA | 905 | Riverside | 0.5 | 37.8 | 61.7 | 6.9 | 88.1 | 2.4 | 0.4 | 0.3 | 1.9 | | |
| 6065046601 | NA | NA | NA | 4888 | Riverside | 0.9 | 95.5 | 3.6 | 35.7 | 31.2 | 31.2 | 0.8 | 0.8 | 0.3 | | |
| 6065940100 | NA | NA | NA | 166 | Riverside | 2.4 | 51.8 | 45.8 | 1.8 | 92.8 | 0 | 0.6 | 0 | 4.8 | | |
| 6065980004 | NA | NA | NA | 9 | Riverside | 0 | 88.9 | 11.1 | 0 | 77.8 | 0 | 0 | 0 | 22.2 | | |
| 6065981000 | NA | NA | NA | 7634 | Riverside | 0 | 94.7 | 5.3 | 51.6 | 18.5 | 26 | 0.9 | 0.8 | 2.2 | | |
| 6067007101 | NA | NA | NA | 253 | Sacramento | 11.5 | 71.1 | 17.4 | 12.3 | 79.1 | 1.2 | 0.4 | 5.5 | 1.6 | | |
| 6067988300 | NA | NA | NA | 6747 | Sacramento | 0 | 99.5 | 0.5 | 25.6 | 20.3 | 46.8 | 0.8 | 1.7 | 4.7 | | |
| 6071012300 | NA | NA | NA | 1513 | San Bernardino | 0 | 94.4 | 5.6 | 22.9 | 41.3 | 30.1 | 0.4 | 5.1 | 0.1 | | |
| 6071980100 | NA | NA | NA | 0 | San Bernardino | 0 | 100 | 0 | NA | NA | NA | NA | NA | NA | | |
| 6071980200 | NA | NA | NA | 4499 | San Bernardino | 0.1 | 98.5 | 1.4 | 38.2 | 19.8 | 31.1 | 5.1 | 3.5 | 2.2 | | |
| 6073003800 | NA | NA | NA | 6530 | San Diego | 0 | 100 | 0 | 15.7 | 53.5 | 17.7 | 0.9 | 7.5 | 4.7 | | |
| 6073005500 | NA | NA | NA | 198 | San Diego | 0 | 94.4 | 5.6 | 17.2 | 51.5 | 14.1 | 1.5 | 10.6 | 5.1 | | |
| 6073006200 | NA | NA | NA | 144 | San Diego | 0 | 79.2 | 20.8 | 2.8 | 88.2 | 1.4 | 0 | 2.8 | 4.9 | | |
| 6073006300 | NA | NA | NA | 3435 | San Diego | 0.1 | 99.8 | 0.1 | 18.7 | 69.9 | 4.1 | 1.3 | 3 | 3 | | |
| 6073009901 | NA | NA | NA | 626 | San Diego | 0.7 | 99.3 | 0 | 13.9 | 70 | 10.1 | 0.8 | 3.2 | 2.1 | | |
| 6073009902 | NA | NA | NA | 2 | San Diego | 0 | 0 | 100 | 0 | 100 | 0 | 0 | 0 | 0 | | |
| 6073011300 | NA | NA | NA | 6520 | San Diego | 0.4 | 99.5 | 0.1 | 17.3 | 52.5 | 18.8 | 1.2 | 6.5 | 3.7 | | |
| 6075980200 | NA | NA | NA | 320 | San Francisco | 4.4 | 52.2 | 43.4 | 7.8 | 67.5 | 11.2 | 0.6 | 10.3 | 2.5 | | |
| 6075980300 | NA | NA | NA | 171 | San Francisco | 0.6 | 96.5 | 2.9 | 11.1 | 75.4 | 7 | 0.6 | 3.5 | 2.3 | | |
| 6075980900 | NA | NA | NA | 350 | San Francisco | 2.9 | 92.5 | 4.6 | 23.1 | 52.9 | 10.6 | 0.3 | 8.6 | 4.6 | | |
| 6079011400 | NA | NA | NA | 6446 | San Luis Obispo | 0 | 97.1 | 2.9 | 29.2 | 23.8 | 39.6 | 0.9 | 0.3 | 6.1 | | |
| 6079012800 | NA | NA | NA | 1107 | San Luis Obispo | 1.2 | 95.8 | 3 | 25.8 | 40.8 | 26.1 | 1 | 4.8 | 1.4 | | |
| 6081984300 | NA | NA | NA | 0 | San Mateo | 0 | 100 | 0 | NA | NA | NA | NA | NA | NA | | |
| 6083002604 | NA | NA | NA | 3582 | Santa Barbara | 0.8 | 97.4 | 1.8 | 49.6 | 23.7 | 16 | 1.6 | 6 | 3 | | |
| 6083980000 | NA | NA | NA | 10 | Santa Barbara | 0 | 90 | 10 | 0 | 90 | 0 | 0 | 10 | 0 | | |
| 6083980100 | NA | NA | NA | 11 | Santa Barbara | 9.1 | 81.8 | 9.1 | 18.2 | 54.5 | 0 | 0 | 0 | 27.3 | | |
| 6085504417 | NA | NA | NA | 323 | Santa Clara | 6.5 | 84.2 | 9.3 | 14.6 | 37.5 | 2.5 | 1.2 | 42.1 | 2.2 | | |
| 6085511608 | NA | NA | NA | 2687 | Santa Clara | 0.2 | 99.6 | 0.2 | 12 | 46 | 6.8 | 1.1 | 24.1 | 10 | | |
| 6095253000 | NA | NA | NA | 7810 | Solano | 0 | 95.8 | 4.2 | 20.2 | 27 | 43.2 | 1.4 | 0.4 | 7.9 | | |
| 6095980000 | NA | NA | NA | 16 | Solano | 25 | 62.5 | 12.5 | 56.2 | 18.8 | 12.5 | 0 | 0 | 12.5 | | |
| 6107004000 | NA | NA | NA | 560 | Tulare | 0.4 | 93.9 | 5.7 | 22.9 | 54.1 | 18.9 | 1.1 | 2.7 | 0.4 | | |
| 6109985202 | NA | NA | NA | 3590 | Tuolumne | 0 | 99.1 | 0.9 | 37.9 | 30.8 | 24.7 | 1.1 | 0.5 | 5 | | |
| 6111003012 | NA | NA | NA | 321 | Ventura | 13.4 | 73.8 | 12.8 | 84.7 | 13.1 | 0 | 0.3 | 1.9 | 0 | | |
| 6111980000 | NA | NA | NA | 56 | Ventura | 0 | 100 | 0 | 14.3 | 71.4 | 8.9 | 0 | 5.4 | 0 | | |