PROJECT DATA

PROJECT DESCRIPTION:	ACCESSORY DWELLING UNIT
PROJECT ADDRESS:	CITY OF FRESNO
ZONING:	RE/ RS-1/ RS-2/ RS-3/ RS-4/ RS-5
CONSTRUCTION TYPE:	TYPE V-B
BUILDING AREA:	(N) FIRST LEVEL = 633 SF (1)
LOT COVERAGE:	PER THE UNDERLYING ZONE DISTRICT
NUMBER OF STORIES:	SINGLE STORY RESIDENTIAL
OCCUPANCY:	R3 OCCUPANCY GROUP
REQUIRED YARDS:	PER THE UNDERLYING ZONE DISTRICT
BUILDING HEIGHT:	30'-0" MAXIMUM HEIGHT ENVELOPE

DRAWING INDEX

A.001	DRAWING INDEX / SITE PLAN / SITE SECTION	AS NOTED
A.002	GENERAL NOTES	AS NOTED
A.020c	TYPICAL DETAILS	3"=1'-0"
A.020g	TYPICAL DETAILS	3"=1'-0"
A.020s	TYPICAL DETAILS	3"=1'-0"
A.021	TYPICAL DETAILS	AS NOTED
A.100c	FLOOR PLAN	1/4"=1'-0"
	WINDOW SCHEDULE / ELEVATIONS	1/2"=1'-0"
	DOOR SCHEDULE / ELEVATIONS	1/2"=1'-0"
A.100c_alt	FLOOR PLAN	1/4"=1'-0"
	WINDOW SCHEDULE / ELEVATIONS	1/2"=1'-0"
	DOOR SCHEDULE / ELEVATIONS	1/2"=1'-0"
A.100g	FLOOR PLAN	1/4"=1'-0"
	WINDOW SCHEDULE / ELEVATIONS	1/2"=1'-0"
	DOOR SCHEDULE / ELEVATIONS	1/2"=1'-0"
A.100g_alt	FLOOR PLAN	1/4"=1'-0"
	WINDOW SCHEDULE / ELEVATIONS	1/2"=1'-0"
	DOOR SCHEDULE / ELEVATIONS	1/2"=1'-0"
A.100s	FLOOR PLAN	1/4"=1'-0"
	WINDOW SCHEDULE / ELEVATIONS	1/2"=1'-0"
	DOOR SCHEDULE / ELEVATIONS	1/2"=1'-0"
A.100s_alt	FLOOR PLAN	1/4"=1'-0"
	WINDOW SCHEDULE / ELEVATIONS	1/2"=1'-0"
	DOOR SCHEDULE / ELEVATIONS	1/2"=1'-0"
A.101c	ROOF PLAN	1/4"=1'-0"
A.101g	ROOF PLAN	1/4"=1'-0"
A.101s	ROOF PLAN	1/4"=1'-0"
A.110c	REFLECTED CEILING PLAN	1/4"=1'-0"
	LIGHTING SCHEDULE	N/A
A.110c_alt	REFLECTED CEILING PLAN	1/4"=1'-0"
	LIGHTING SCHEDULE	N/A
A.110g	REFLECTED CEILING PLAN	1/4"=1'-0"
	LIGHTING SCHEDULE	N/A
A.110g_alt	REFLECTED CEILING PLAN	1/4"=1'-0"
	LIGHTING SCHEDULE	N/A
A.110s	REFLECTED CEILING PLAN	1/4"=1'-0"
	LIGHTING SCHEDULE	N/A
A.110s_alt	REFLECTED CEILING PLAN	1/4"=1'-0"
	LIGHTING SCHEDULE	N/A
A.200c	EXTERIOR ELEVATION	1/4"=1'-0"
	BUILDING SECTIONS	1/4"=1'-0"
A.200g	EXTERIOR ELEVATION	1/4"=1'-0"
	BUILDING SECTIONS	1/4"=1'-0"
A.200s	EXTERIOR ELEVATION	1/4"=1'-0"
	BUILDING SECTIONS	1/4"=1'-0"
A.400	INTERIOR ELEVATIONS	1/2"=1'-0"
	APPLIANCE SCHEDULE / PLUMBING SCHEDULE	N/A
A.401c	INTERIOR ELEVATIONS	1/2"=1'-0"
A.401c_alt	INTERIOR ELEVATIONS	1/2"=1'-0"
A.401g	INTERIOR ELEVATIONS	1/2"=1'-0"
A.401g_alt	INTERIOR ELEVATIONS	1/2"=1'-0"
A.401s	INTERIOR ELEVATIONS	1/2"=1'-0"
A.401s_alt	INTERIOR ELEVATIONS	1/2"=1'-0"
A.402c	INTERIOR ELEVATIONS	1/2"=1'-0"
A.402c_alt	INTERIOR ELEVATIONS	1/2"=1'-0"
A.402g	INTERIOR ELEVATIONS	1/2"=1'-0"
A.402g_alt	INTERIOR ELEVATIONS	1/2"=1'-0"
A.402s	INTERIOR ELEVATIONS	1/2"=1'-0"
A.402s_alt	INTERIOR ELEVATIONS	1/2"=1'-0"
S.000	STRUCTURAL GENERAL NOTES & SHEET LIST	N/A
S.010	TYPICAL CONCRETE DETAILS	AS NOTED
S.020	TYPICAL WOOD DETAILS - GENERAL AND STUD WALLS	AS NOTED
S.021	TYPICAL WOOD DETAILS - SHEAR WALLS	AS NOTED
S.022	TYPICAL WOOD DETAILS - SHEAR WALLS AND ROOF CONNECTIONS	AS NOTED
S.023	TYPICAL WOOD DETAILS - DIAPHRAGMS	AS NOTED
S.100c	FOUNDATIONS AND FRAMING PLANS - CRAFTSMAN	1/4"=1'-0"
S.100g	FOUNDATIONS AND FRAMING PLANS - GABLE	1/4"=1'-0"
S.100s	FOUNDATIONS AND FRAMING PLANS - SHED	1/4"=1'-0"
S.110c	CEILING FRAMING PLAN - CRAFTSMAN	1/4"=1'-0"
S.110g	CEILING FRAMING PLAN - GABLE	1/4"=1'-0"
S.110s	CEILING FRAMING PLAN - CONTEMPORARY	1/4"=1'-0"
S.200c	ELEVATIONS AND SECTIONS - CRAFTSMAN	1/4"=1'-0"
S.200g	ELEVATIONS AND SECTIONS - GABLE	1/4"=1'-0"
S.200s	ELEVATIONS AND SECTIONS - CONTEMPORARY	1/4"=1'-0"
T24-3	TITLE 24 ENERGY ANALYSIS	N/A
MM-1	TITLE 24 MANDATORY MEASURES CONTEMPORARY	" \
MM-2	TITLE 24 MANDATORY MEASURES	" \
M-0.00	MECHANICAL SPECS, LEGENDS & SYMBOLS	N/A
M-1.01	MECHANICAL LAYOUT	AS NOTED
M-1.01.2	MECHANICAL LAYOUT_ALT.	AS NOTED
P0.00	PLUMBING SPECS, DETAILS & SYMBOLS	N/A
P1.01	WATER SUPPLY LAYOUT	AS NOTED
P1.02	GAS LAYOUT	AS NOTED
P1.03	DRAINAGE LAYOUT	AS NOTED
E-0.00	ELECTRICAL SPECS, LEGEND & SYMBOLS	N/A
E1.01	LIGHTING LAYOUT	AS NOTED
E1.01.2	LIGHTING LAYOUT_ALT.	AS NOTED
E2.01	POWER LAYOUT	AS NOTED
E2.01.2	POWER LAYOUT_ALT.	AS NOTED
E-0.01	ELECTRICAL SINGLE LINE DIAGRAM	N/A
PV-1	PLOT PLAN & LAYOUT	3/16"=1'-0"
PV-2	ELECTRICAL DESIGN	N/A
PV-3	EQUIPMENT SPECIFICATION	N/A
PV-4	EQUIPMENT SPECIFICATION	N/A

LEGEND (2)

1 — EAST-WEST REFERENCE LINE

A — NORTH-SOUTH REFERENCE LINE

01 / A.403 / 04 / 02 / 03 — ELEVATION

01 / A316 — SECTION

04 — WINDOW NUMBER

42 — DOOR NUMBER

01 / A.520 — DETAIL

22 / GARAGE — ROOM TAG

1 — WALL TYPE

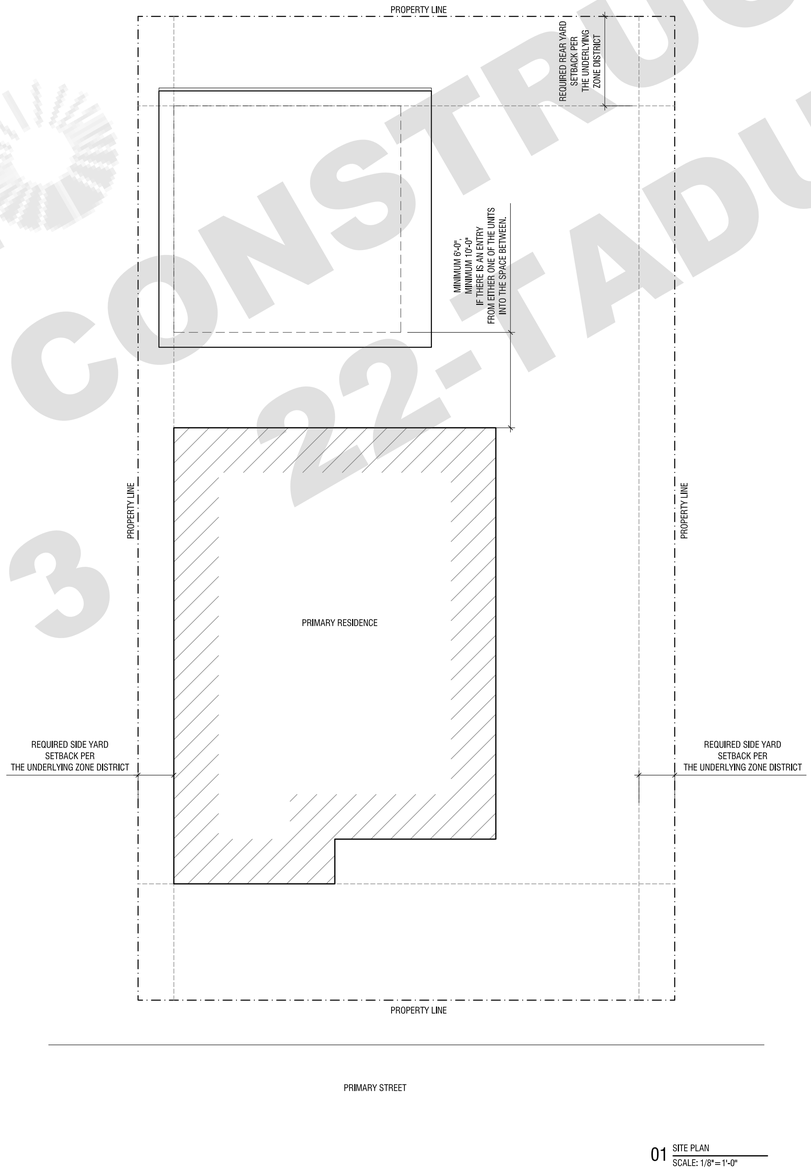

01 SITE PLAN
SCALE: 1/8"=1'-0"

Provide Special Inspection for Field Verification and Diagnostic Testing performed by a third party certified HERS Rater for the following:
a) Quality insulation installation
b) Indoor air quality ventilation
c) Kitchen range hood
d) Minimum air flow
e) Verified EER
f) Verified SEER
g) Verified refrigerant charge
h) Fan efficacy watts / CFM
i) Verified HSPF
j) Verified heat pump rated heating capacity
k) Duct leakage testing
l) Ducts located entirely in conditioned space confirmed by duct leakage testing

NOTES:
After installing Water Heating Systems, Fenetration, and HVAC equipment, the installer shall submit the Installation Certificate* (CF-2R form), completed and signed by the installer, listing the equipment installed, (manufacturer, model, and efficiencies, U-Values and SHGC-values, etc.) and that It meets or exceeds the requirements of the energy documentation. (CEES section 10-103(a)(3))
(Registered copies shall be provided when HERS verification is required.)

NOTES:
REGISTERED copies of the CF-2R and CF-3R forms shall be submitted prior to prior to final inspection, signed by certified by the installer(s) for the CF-2R form, and the HERS Rater, for Field Verification and Diagnostic Testing on the CF-3R form. (CEES 10-103(a)(3) and 10-103(a)(5))

1

NOTES:

a) LOT SHALL BE GRADED TO DRAIN WATER AWAY FROM ALL FOUNDATIONS AT A SLOPE OF 5% WITHIN 10 FEET OF THE BUILDING. (CRC SECTION R401.3)

b) IMPERVIOUS SURFACES WITHIN 10' OF THE BUILDING FOUNDATION SHALL SLOPE A MINIMUM OF 2% AWAY FROM BUILDING.

c) ALL SITE GRADING OUTSIDE OF THE BUILDING ENVELOPE IS REQUIRED TO BE A MINIMUM OF 0.5% DIRECTED TOWARDS THE STREET.

CITY OF FRESNO
NOT FOR CONSTRUCTION
PLAN 3 22-1 ADU-03

ANX
AARON NEUBERT ARCHITECTS

ADU PROGRAM

OWNER:
CITY OF FRESNO
PLANNING AND DEVELOPMENT DEPARTMENT
2600 FRESNO STREET, 3RD FLOOR
FRESNO, CA 93721

ARCHITECT:
AARON NEUBERT ARCHITECTS, INC.
2814 ROWENA AVENUE, SUITE ONE
LOS ANGELES, CALIFORNIA 90039
P. 323.953.4709 F. 323.953.4900
AARON NEUBERT CA# C-29005

STRUCTURAL ENGINEER:
NOUS ENGINEERING, INC.
600 WILSHIRE BOULEVARD, SUITE 760
LOS ANGELES, CALIFORNIA 90017
P. 213.627.6687

MEP ENGINEER:
INNODEZ DESIGN AND ENGINEERING
726 FOXBOROUGH PLACE
PLEASANTON, CALIFORNIA 94566
P. 424.414.0997

REVISION:	DATE:	COMMENT:
ISSUE:		
2 REVISION #2	06.03.22	PLAN CHECK CORRECTIONS
1 REVISION #1	04.04.22	PLAN CHECK CORRECTIONS

SEAL:

LICENSED ARCHITECT — CHRISTOPHER A. NEUBERT — C-29005 — 05.31.23 — RENEWAL DATE — STATE OF CALIFORNIA

Project No. 2104

ADU PROGRAM
CITY OF FRESNO
CALIFORNIA

DRAWING TITLE:
SITE PLAN
ADU 03

633 SF

DATE: JUNE 3, 2022
SCALE: 1/4"=1'-0"
DRAWN BY:

© Aaron Neubert Architects, INC. 2022

A.001

GENERAL NOTES

Code Reference:

California Building Code 2019	**(CBC)**
California Residential Code 2019	**(R)**
California Green Building Standard Code 2019	**(CGBSC)**
California Mechanical Code 2019	**(CMC)**
California Electrical Code 2019	**(CEC)**
California Plumbing Code 2019	**(CPC)**

Code Compliance and Inspection Per City Of Fresno:

1. All construction shall Conform to California Building Code 2019 pertaining to Type VB construction and all other applicable codes.
2. An approved set of drawings bearing the stamp of the City of Fresno Building and Safety Department shall be available on the construction site at all times. All appropriate and necessary Department of Building and Safety permits must be posted at all times.

General Construction Notes:

1. Prior to ordering any materials or doing any work, each trade shall verify all measurements at the building and shall be responsible for the correctness of the same. No extra charge or compensation will be allowed on account of differences between actual dimensions and the measurements indicated on the drawings; any discrepancies between the drawings and field conditions which may be found shall be submitted to the Architect for consideration and clarification before proceeding with the work. The contractor shall be responsible for any deviation from the Contract Documents.
2. All of the Architect's drawings and construction notes are complimentary and what is called for will be binding as if called for by all; any work shown or referred to on any one drawing shall be provided as though shown on all drawings.
3. The work to be performed consists of furnishing all labor, equipment, tools, transportation, supplies, fees, materials and services in accordance with these notes and drawings; and includes performing all operations necessary to construct and install complete, in satisfactory condition, the various materials and equipment at the locations shown.
4. All dimensions to from stud to stud; or center of stud to center of stud (unless otherwise noted).
5. Contractor to field verify all dimensions and elevations for clearances and notify Architect of any discrepancies between Drawings and actual conditions.
6. Full size or large scale details or drawings shall govern small scale drawings which they are intended to amplify.
7. The standard specifications of the manufacturer for products called for in the drawings and notes are hereby made a part of these notes with the same force and effect as though herein written out in full.
8. All materials required for the performance of this work shall be new and of the best quality of the kinds specified. The use of old or second hand materials is strictly forbidden, except for locations on the drawings that refer to removal and relocation of materials or equipment. Materials shall be used in accordance with the manufacturer's specifications. The contractor shall submit all product warranties. The contractor will warranty all work as per applicable regulations.
9. Plumbing, Electrical and Mechanical work shall be performed by a licensed member of the respective trade.
10. All insurance costs and costs associated with permits, inspection and sign-offs shall be at the contractors cost.
11. Certificates of insurance are required from the licensed electrician, licensed plumber, and the general contractor for the amounts specified by the contract.
12. All contractors, sub-contractors and others working on the project shall submit waivers of liens signed at the completion of their work.
13. The premises and job site shall be maintained in a reasonably neat and orderly condition and kept free from accumulations of waste materials and rubbish during the entire construction period. The contractor shall remove all crates, cartons and other trash from the work areas each day, and shall be responsible for its proper disposal. The premises shall be protected throughout construction and shall be turned over in spotless and orderly condition. All fixtures and equipment will be left in undamaged, bright, clean and polished condition.
14. Construction work will be confined to the areas designated on the drawings and will not create dust, dirt or other inconveniences to other spaces.
15. Provide approved job site toilet that is available to anyone involved in construction activities.
16. The construction shall not restrict a five-foot clear and unobstructed access to any water or power distribution facilities (power poles, pull-boxes, transformers, vaults, pumps, valves, meters, appurtenances, etc.) or to the location of the hook-up. The construction shall not be within ten feet of any power lines-whether or not the lines are located on the property. Failure to comply may cause construction delays and/or additional expenses.
17. Nothing shall interfere with the rights, comforts, or conveniences of any neighbors. No construction work, repair work, or other installation involving noise shall be conducted except on city approved work days/hours, unless such construction or repair work is necessitated by an emergency, or otherwise agreed to by owner.
18. Provide all temporary and permanent shoring as required in structural drawings.
19. All wood floors to be secured as required to prevent creaking. All holes to be patched.
20. Provide gutters and downspouts as required.
21. Weatherstrip exterior doors from heated spaces.
22. Upon completion of project, premises shall be left broom clean, swept free of dirt and dust, all glass to be clean, all fixtures and appliances made fully operational, all systems, (electrical, plumbing, hvac, etc.) to be made fully operational and balanced. All warranties and manuals of systems reviewed with and given to owner.
23. All work shall be subject to final inspection by the Architect.
24. A copy of the evaluation report and/or conditions of listing shall be available at the job site.
25. Materials delivered to the construction site shall be protected from rain or other sources of moisture.
26. An Operation and Maintenance Manual for any newly installed equipment, appliances, HVAC system, photovoltaic system, electric vehicle chargers, water heating system, landscape irrigation and other major appliances and equipments, shall be provided in the building at the time of final inspection.

Moisture Protection:

1. Flash and counter-flash at all roof to wall conditions.
2. G.I. flash and caulk wood beams projecting form exterior wall or roof surfaces.
3. All exterior finish materials shall be applied over minimum 30# asphalt saturated felt, unless otherwise noted.
4. Flash all exterior openings with approved waterproof building paper to extend at least 3" under the building paper behind the wall covering.
5. Shower and bathtub wall surrounds shall be stone/tile as noted, to a minimum 6'-8" a.f.f. and shall also extend 4" beyond the face of shower pan or tub.
6. Bathtub and shower floors, walls above bathtubs with a showerhead, and shower compartments shall be finished with a nonabsorbent surface. Such wall surfaces shall extend to a height of not less than 6 feet above the floor (R 307.2)

Fire Protection:

1. All building materials stored at the construction site and/or inside the building are to be secured in a locked area. Access to such areas to be controlled by the Owner and/or the General Contractor.
2. All materials are to be stored in an orderly manner.
3. All flammable materials to be kept tightly sealed in their respective containers. Such materials are to be kept away from all heat sources.
4. All flammable materials to be used and stored in an adequately ventilated space.
5. All electrical power to be shut off where there is exposed conduit.
6. All electrical power in the construction area to be shut off after working hours.
7. The contractor will at all times make sure that there is no leakage of natural gas in the building, or any flammable gas used in construction.
8. Provide a class A,B or C fire-retardant roof covering per Section (R 902.1).
9. On site fire protection equipment (such as extinguisher) will be kept readily available at all times.
10. If fire sprinkler system is required, fire sprinkler system shall be approved by Plumbing Division prior to installation.
11. In combustible construction, fire blocking shall be provided to cut off all concealed draft openings (both vertical and horizontal) and to form an effective fire barrier between stories, and between a top story and the roof space. (R 302.11)
12. Enclosed accessible space under stair shall have walls, under-stair surface and any soffits protected on the enclosed side with 1/2 inch gypsum board. (R302.7)
13. Smoke detectors shall be provided for all dwelling units intended for human occupancy, where a permit is required for alterations, repairs or additions. (R 314.2)
14. Where a permit is required for alterations, repairs or additions, existing dwellings or sleeping units that have attached garages or fuel-burning appliances shall be provided with a carbon monoxide alarm in accordance with Section R315.2. Carbon monoxide alarms shall only be required in the specific dwelling unit or sleeping unit for which the permit was obtained. (R 315.2)
15. An approved smoke alarm shall be installed in each sleeping room & hallway or area giving access to a sleeping room, and on each story and basement for dwellings with more than one story. Smoke alarms shall be interconnected so that actuation of one alarm will activate all the alarms within the individual dwelling unit. In new construction smoke alarms shall receive their primary power source from the building wiring and shall be equipped with battery back up and low battery signal (R 314)
16. An approved carbon monoxide alarm shall be installed in dwelling units and in sleeping units within which fuel-burning appliances are installed and in dwelling units that have attached garages. Carbon monoxide alarm shall be provided outside of each separate dwelling unit sleeping area in the immediate vicinity of the bedroom(s) and on every level of a dwelling unit including basements. (R 315.3)

Exits and Stairways:

1. The means of egress shall provide a continuous and unobstructed path of vertical and horizontal egress travel from all portions of the dwelling to the exterior of the dwelling at the required egress door without requiring travel through a garage. The required egress door shall open directly into a public way or to a yard or court that opens to a public way. (R 311.1)
2. At least one door shall be 36" wide by 80" high. (R 311.2)
3. Provide minimum 32" wide doors to all interior accessible rooms. (R 311.2)
4. The entry/exit door must open over a landing not more than 1.5" below the threshold. Exception: Providing the door does not swing over the landing. Landing shall be not more than 7.75" below the threshold. Storm and screen doors are permitted to swing over all exterior stairs and landings. (R 311.3.1)
5. Landing at a door shall have a length measured in the direction of travel of no less than 36". (R 311.3)
6. A landing shall be provided at the top and bottom of stairways. (R 311.7.6)
7. Stairway details :
   a. 7.75" maximum rise & minimum 10" run. (R 311.7.5)
   b. Minimum 6'-8" headroom clearance. (R 311.7.2)
   c. Minimum 36" clear width. (R 311.7.1)
   d. Handrails 34" to 38" high above tread nosing (R 311.7.8.1)
   e. Handgrip portion of handrail shall not be less than 1.25" and no more than 2" cross- sectional dimension having a smooth surface with no sharp corners. (R 311.7.8.5)
   f. Maximum 4" clear spacing opening between rails.
8. All interior and exterior stairways shall be illuminated. (R 303.7)
9. For glass handrails and guards, the panels and their support system shall be designed to withstand the loads specified in Chapter 16 of CBC. A safety factor of four shall be used. The minimum nominal thickness of the glass shall be 1/4 inch. (CBC 2407)
10. Provide emergency egress from sleeping rooms and basements. Show details on plans. Minimum - 24" clear height, 20" clear width, 5.7 sf minimum area (5.0 sf at grade level) & 44" maximum to sill. (R 310.2.1)

Mechanical Notes:

1. Check existing mechanical system with reference to work being done. Replace existing equipment and ducts as required.
2. Refer to T24 energy notes for heating & air conditioning equipment requirements.
3. Mechanical System: Units, ducting and grilles to be design-built with full coordination between the General Contractor and the Architect for sizing and placement of equipment. All fixtures, devices and equipment shall comply with applicable regulations.
4. All duct and other related air distribution component openings shall be covered with tape, plastic, or sheet metal until the final startup of the heating, cooling and venting equipment. (CGBSC 4.504.1)
5. Clothes dryer moisture exhaust ducts shall terminate outside the building and have a back-draft damper. Exhaust duct is limited to 14'-0" with two elbows. This shall be reduced 2'-0" for every elbow in excess of two. (CMC 504.4.2.1)

Electrical Notes:

1. Check existing system with reference to new work to be done. Re-route and /or replace portions (including service) as necessary.
2. Furnish and install all outlets, switches, fixtures and equipment indicated, including light bulbs, and install any fixtures and equipment furnished by owner.
3. Non-metallic sheathed cable shall be concealed or protected.
4. Provide ground-fault-circuit-interrupters (GFI) protection for all 125-volt, single phase, 15-and 20- amp bathroom, laundry, garage and exterior receptacles, countertop receptacles within 6'-0" of all sink locations, and all kitchen receptacles.
5. Central heating equipment requires individual branch circuits.
6. All fixtures, devices and equipment shall comply with applicable regulations.
7. At least one light outlet (wall switch controlled) shall be installed on the exterior side of outdoor entrances and exits. [NEC 210-70(a)]

Plumbing Notes:

1. Check existing plumbing system with reference to new work to be done. Re-route and/or replace portions (including service) as necessary.
2. Furnish and install all fixtures indicated, complete for normal operation. Install any fixtures provided by owner.
3. All drain lines & waste lines from second floor to be cast iron.
4. An approved seismic gas shutoff valve will be installed on the fuel gas line on the down stream side of the utility meter and be rigidly connected to the exterior of the building or structure containing the fuel gas piping. Separate plumbing permit is required.
5. Plumbing fixtures are required to be connected to a sanitary sewer or to an approved sewage disposal system. (R 306.3)
6. Kitchen sinks, lavatories, bathtubs, showers, bidets, laundry tubs and washing machine outlets shall be provided with hot and cold water and connected to an approved water supply. (R 306.4)
7. Provide ultra low flush water closets for all new construction. Existing shower heads and toilets must be adapted for low water consumption.
8. Water heater shall be anchored or strapped to resist horizontal displacement due to earthquake motion. (CPC 2019)
9. Combustion air supplied to fuel burning appliances (water heaters, forced air units, furnaces) located in confined spaces (enclosures, compartments, utility rooms) within unusually tight construction (basement) shall conform to the provisions of (R 315)
10. The flow rates for all newly installed plumbing fixtures shall comply with the maximum flow rates in (CGBC 4.303)
11. When single shower fixtures are served by more than one showerhead, the combined flow rate of all the showerheads shall not exceed the maximum allowable flow rate of 1.8 gallons per minute at 80 PSI or the shower shall be designed to only allow one showerhead to be in operation at a time. (CGBC 4.303.1.3.2)

Environmental Quality:

1. Architectural paints and coatings, adhesives, caulks and sealants shall comply with the Volatile Organic Compound (VOC) limits listed in Tables (CGBSC 4.504.2.1 - 4.504.2.3)
2. Annular spaces around pipes, electric cables, conduits or other openings in sole/bottom plates at exterior walls shall be protected against the passage of rodents by closing such openings with cement mortar, concrete masonry or similar methods. (CGBSC 4.406.1) .
3. Provide Building Operations and Maintenance at the time of final inspection and placed in the building. (CGBSC 4.410.1)
4. If Fireplace is installed, fireplaces shall be direct vent sealed combustion-type. Indicate on the plans the manufacturer name and model number. (CGBSC 4.503.1)
5. At the time of rough installation, or during storage on the construction site and until final startup of the heating, cooling and ventilating equipment, all duct and other related air distribution component openings shall be covered with tape, plastic, sheet metal, or other acceptable methods to reduce the amount of water, dust and debris that may enter the system. (CGBSC 4.504.1)
6. Building materials with visible signs of water damage shall not be installed. Wall and floor framing shall not be enclosed when the framing members exceed 19% moisture content. Insulation products that are visibly wet or have high moisture content shall be replaced or allowed to dry prior to enclosure in wall or floor cavities. (CGBSC 4.505.3)
7. All mechanical exhaust fans in rooms with a bathtub or shower shall comply with the following:
   a. Fans shall be ENERGY STAR compliant and be ducted to terminate outside the building.
   b. Fans must be controlled by a humidity control capable of adjustment between relative humidity ranges of ≤50% to a maximum of 80% unless functioning as a component of a whole house ventilation system. (CGBSC 4.506.1)
8. Verification of compliance with these sections must be provided at the time of final inspection and shall be documented on the Building Operations and Maintenance Manual.
   a. Adhesives, sealants and caulks shall meet or exceed the standards outlined in Section 4.504.2.1 and comply with the VOC limits in Tables 4.504.1 and 4.504.2 as applicable. (CGBSC 4.504.2.1)
   b. Paints and coatings shall meet or exceed the standards outlined in Section CGBSC 4.504.2.2 and comply with the VOC limits in Table 4.504.3. (CGBSC 4.504.2.2)
   c. Aerosol paints and coatings shall meet or exceed the standards outlined in Section 4.504.2.3. (CGBSC 4.504.2.3)
   d. All carpet installed in the building interior shall meet the testing and product requirements of one of the following:
      d.1. Carpet and Rug Institute's Green Label Plus Program OR
      d.2. California Department of Public Health Standard Method for the testing of VOC Emissions (Spec 01350) OR
      d.3. NSF/ANSI 140 at the Gold Level OR
      d.4. Scientific Certifications Systems Indoor Advantage Gold (CGBSC 4.504.3)
   e. All carpet cushion installed in the building interior shall meet the requirements of the Carpet and Rug Institute Green Label Program. Carpet adhesives shall not exceed a VOC limit of 50 g/L. (CGBSC 4.504.3.1, 4.504.3.2)
   f. A minimum of 80% of floor area receiving resilient flooring shall comply with one or more of the following:
      f.1. VOC emission limits defined in the CHPS High Performance Products Database OR
      f.2. Products compliant with CHPS criteria certified under the Greenguard Children & Schools program OR
      f.3. Certification under the RFCI FloorScore Program OR
      f.4. Meet the California Department of Public Health Standard Method for the Testing of VOC Emissions. (CGBSC 405.4.4)
   g. Composite wood products (hardwood plywood, particleboard and MDF) installed on the interior or exterior of the building shall meet or exceed the standards outlined in Table 4.504.5. Verification of compliance with these sections must be provided at the time of inspection. (CGBSC 4.504.5)

Glazing:

1. All glass and glazing shall comply with applicable codes and must be labeled safety glazing at hazardous locations defined as: glazing at all doors, bath & shower enclosures, glazing within a 24" arc of a door edge, panels over (9) square feet with the lowest edge less than 18" a.f.f. and having a top edge greater than 36" a.f.f., glazing located within 5'-0" from top or bottom of stairway with bottom edge less than 60" a.f.f.
2. All exterior glazing shall be dual-glazed unless otherwise noted.
3. Unit Skylights shall be tested and approved by an approved independent laboratory, and bear a label identifying manufacturer, performance grade rating and approved inspection agency to indicate compliance with the requirements of AAMA/WDMA/CSA010/I.S.2/A440. (R 308.6.9)
4. Skylights and sloped glazing shall comply with section (R 308.6)
5. Every space intended for human occupancy shall be provided with natural light by means of exterior glazed openings in accordance with Section R 303.1 or shall be provided with artificial light that is adequate to provide an average illumination of 6 foot-candles over the area of the room at a height of 30 inches above the floor level. (R 303.1)
6. Glazing in the following locations shall be safety glazing conforming to the human impact loads of Section R 308.3 (see exceptions) (R 308.4).
   a. Fixed and operable panels of swinging, sliding and bi-fold door assemblies.
   b. Glazing in an individual fixed or operable panel adjacent to a door where the nearest vertical edge is within a 24-inch arc of either vertical edge of the door in a closed position and whose bottom edge is less than 60 inches above the floor or walking surface.
   c. Glazing in an individual fixed or operable panel that meets all of the following conditions:
      1.) Exposed area of an individual pane greater than 9 square feet.
      2.) Bottom edge less than 18 inches above the floor.
      3.) Top edge greater than 36 inches above the floor.
      4.) One or more walking surfaces within 36 inches horizontally of the glazing.
   d. Glazing in railings.
   e. Glazing in enclosures for or walls facing hot tubs, whirlpools, saunas, steam rooms, bathtubs and showers where the bottom edge of the glazing is less than 60 inches measured vertically above any standing or walking surface.
   f. Glazing in walls and fence adjacent to indoor and outdoor swimming pools, hot tubs and spas where the bottom edge of the glazing is less than 60 inches above a walking surface and within 60 inches, measured horizontally and in a straight line, of the water's edge.
   g. Glazing where the bottom exposed edge of the glazing is less than 36 inches above the plane of the adjacent walking surface of stairways, landings between flights of stairs and ramps.
   h. Glazing adjacent to the landing at the bottom of a stairway where the glazing is less than 36 inches above the landing and within 60 inches horizontally of the bottom tread.

Green Building Standards:

1. Provide certification for the following CALGreen components. Documentation shall be required prior to City inspections as noted below:
   a) Indoor Water Use *(final inspection)*
   b) Moisture Content of Building Materials *by Third Party Special Inspector* (insulation inspection)
   c) Adhesive and Sealant VOC *(final inspection)*
   d) Paints and Coatings VOC Limits *(final inspection)*
   e) Composite Wood Products *(frame inspection)*
   f) Carpet and Flooring Certification *(final inspection)*
2. Plumbing fixtures and fixture fittings shall conform to section 4.303.1 for water conserving indoor water use:
   a) Water Closets shall not exceed 1.28 gallons per flush
   b) Showerheads:
   · Single head not more than 1.8 gal/min at 80 psi
   · Multiple heads serving one shower shall have a combined rate not to exceed 1.8 gal/min at 80 psi.
   c) Lavatory Faucets shall have a minimum flow rate not to exceed 0.8 gal/min at 20 psi and a maximum of 1.2 gal/min at 60 psi.
   d) Kitchen Faucets shall have a maximum flow rate not to exceed 1.8 gal/min at 60 psi
   ·Exception: Kitchen faucets may temporarily increase the flow rate above the maximum, but not to exceed 2.2 gal/min at 60 psi maximum, but not to exceed 2.2 gal/min at 60 psi and must default back to the 1.8 gal/min
3. Annular spaces around pipes, electrical cables, conduits, or other openings in sole/bottom at exterior walls shall be protected against the passage of rodents by closing such openings with cement mortar, concrete masonry or similar method approved by the enforcing agency. (CALGreen 4.406.1)
4. Wall and floor framing members shall not be enclosed when moisture content exceeds 19%. Documantation shall be provided at the time of insulation inspection, certifyinh moisture content of framing members, following the procedures outlined in CALGreen 4.505.3.
5. Insulation products which are visibly wet or have high moisture content shall be replaced or allowed to dry per the manufacturer's drying recommendations, prior to enclosure of wall and floor cavities. (CALGreen 4.505.3)
6. Bathroom exhaust fans that are not a component of the whole house ventilation system must be capable of adjustment between a relative humidity range ≤50 percent to a maximum of 80 percent. (CALGreen 4.506.1)(R303.3.1)

ANX

AARON NEUBERT ARCHITECTS

ADU PROGRAM

OWNER:

CITY OF FRESNO
PLANNING AND DEVELOPMENT DEPARTMENT
2600 FRESNO STREET, 3RD FLOOR
FRESNO, CA 93721

ARCHITECT:

AARON NEUBERT ARCHITECTS, INC.
2814 ROWENA AVENUE, SUITE ONE
LOS ANGELES, CALIFORNIA 90039
P. 323.953.4700 F. 323.953.4900

AARON NEUBERT CA# C-29005

STRUCTURAL ENGINEER:

NOUS ENGINEERING, INC.
600 WILSHIRE BOULEVARD, SUITE 760
LOS ANGELES, CALIFORNIA 90017
P. 213.627.6687

MEP ENGINEER:

INNODEZ DESIGN AND ENGINEERING
726 FOXBROUGH PLACE
PLEASANTON, CALIFORNIA 94566
P. 424.414.0997

REVISION:	DATE:	COMMENT:

ISSUE:

2 REVISION #2	06.03.22	PLAN CHECK CORRECTIONS
1 REVISION #1	04.04.22	PLAN CHECK CORRECTIONS

SEAL:

LICENSED ARCHITECT
AARON DOUGLAS NEUBERT
C-29005
05.31.23
RENEWAL DATE
STATE OF CALIFORNIA

Project No. 2104

ADU PROGRAM

CITY OF FRESNO
CALIFORNIA

DRAWING TITLE:

GENERAL NOTES

DATE: JUNE 3, 2022

SCALE: AS NOTED

DRAWN BY:

© Aaron Neubert Architects, INC. 2022

A.002

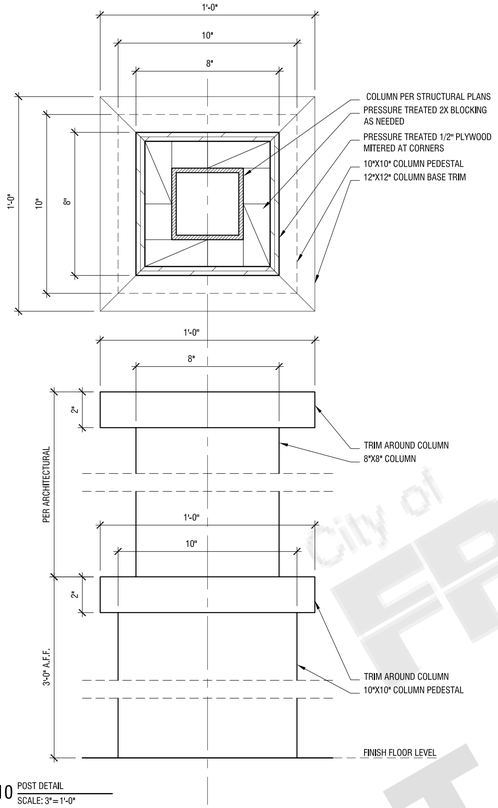

10 POST DETAIL
SCALE: 3" = 1'-0"

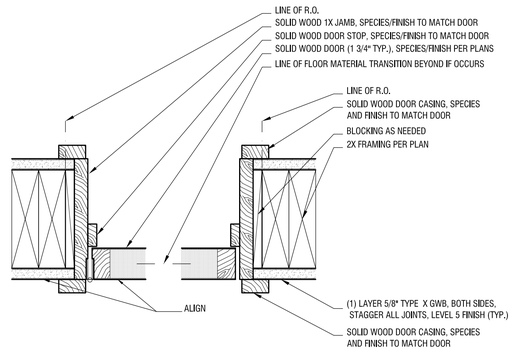

07 FRAMED DOOR JAMB DETAIL
SCALE: 3" = 1'-0"

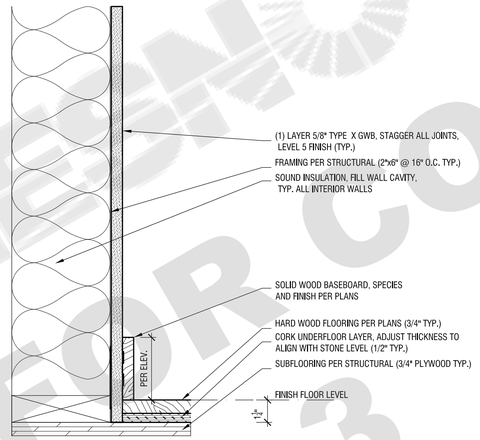

06 PROUD BASEBOARD DETAIL
SCALE: 3" = 1'-0"

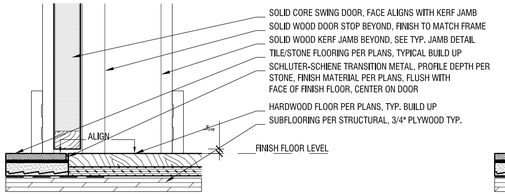

08 FLUSH FLOOR TRANSITION DETAIL AT DOOR
SCALE: 3" = 1'-0"

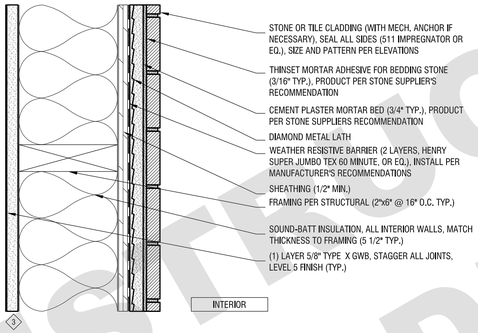

1 HR. FIRE RATED

05 INTERIOR PARTITION
SCALE: 3" = 1'-0"

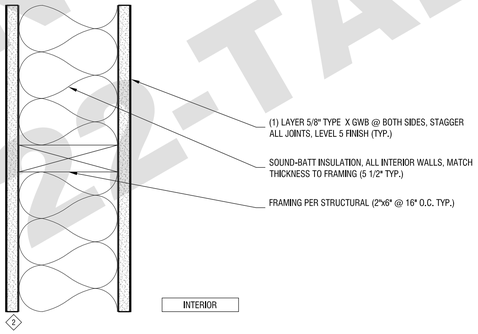

1 HR. FIRE RATED

04 INTERIOR PARTITION
SCALE: 3" = 1'-0"

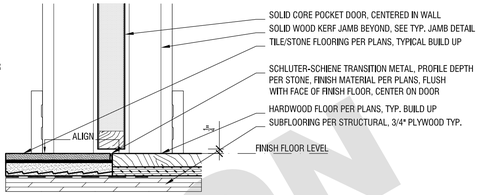

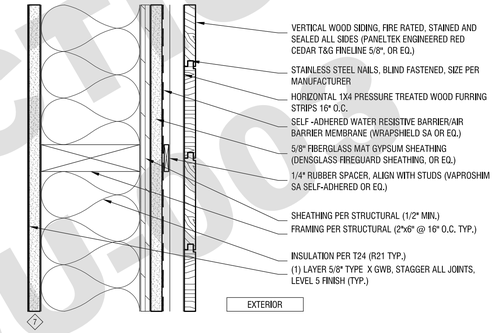

1 HR. FIRE RATED

03A EXTERIOR WALL - TYPE 7
SCALE: 3" = 1'-0"

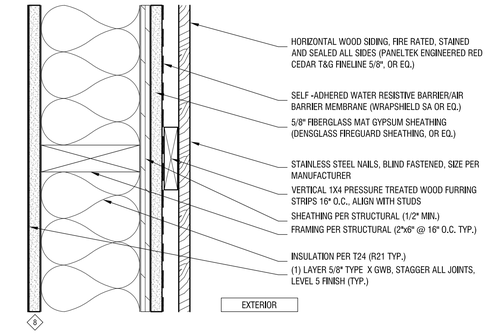

1 HR. FIRE RATED

03 EXTERIOR WALL - TYPE 8
SCALE: 3" = 1'-0"

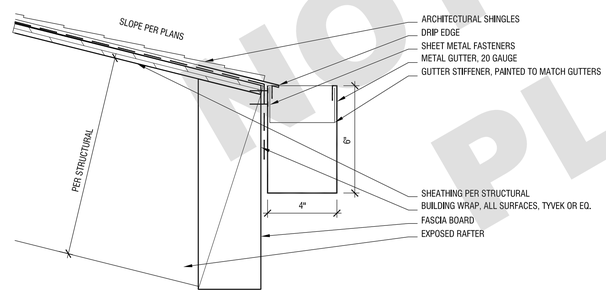

09 ROOF EAVE, SLOPED WITH GUTTER DETAIL
SCALE: 3" = 1'-0"

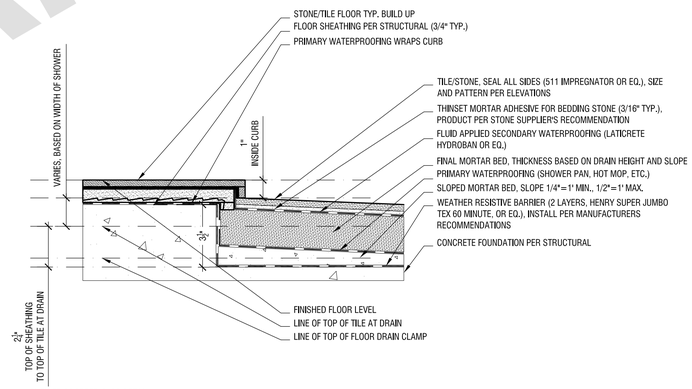

02 SHOWER DROPPED CURB DETAIL
SCALE: 3" = 1'-0"

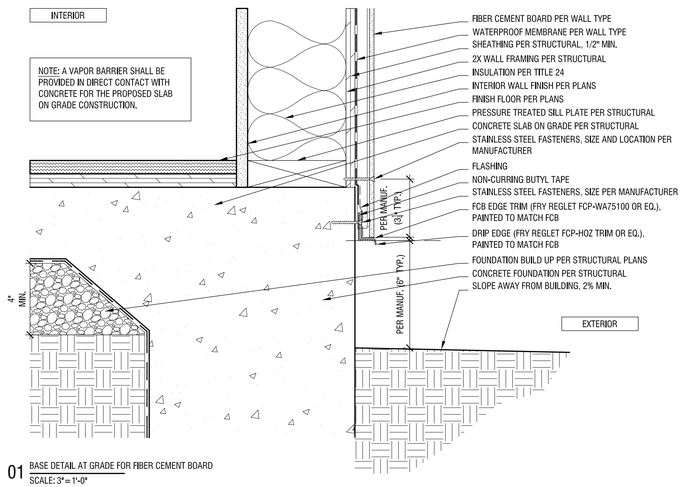

01 BASE DETAIL AT GRADE FOR FIBER CEMENT BOARD
SCALE: 3" = 1'-0"

FRESNO
City of
NOT FOR CONSTRUCTION
PLAN 3
22-TADU00

ANX

AARON NEUBERT ARCHITECTS

ADU PROGRAM

OWNER:

CITY OF FRESNO
PLANNING AND DEVELOPMENT DEPARTMENT
2600 FRESNO STREET, 3RD FLOOR
FRESNO, CA 93721

ARCHITECT:

AARON NEUBERT ARCHITECTS, INC.
2814 ROWENA AVENUE, SUITE ONE
LOS ANGELES, CALIFORNIA 90039
P. 323.953.4700 F. 323.953.4900

AARON NEUBERT CA# C-29005

STRUCTURAL ENGINEER:

NOUS ENGINEERING, INC.
600 WILSHIRE BOULEVARD, SUITE 760
LOS ANGELES, CALIFORNIA 90017
P. 213.627.6687

MEP ENGINEER:

INNODEZ DESIGN AND ENGINEERING
726 FOXBROUGH PLACE
PLEASANTON, CALIFORNIA 94566
P. 424.414.0997

REVISION:	DATE:	COMMENT:
ISSUE:		
2 REVISION #2	06.03.22	PLAN CHECK CORRECTIONS
1 REVISION #1	04.04.22	PLAN CHECK CORRECTIONS

SEAL:



Project No. 2104

ADU PROGRAM

CITY OF FRESNO
CALIFORNIA

DRAWING TITLE:

TYPICAL DETAIL
CRAFTSMAN

DATE: JUNE 3, 2022
SCALE: 3" = 1'-0"
DRAWN BY: ANX

© Aaron Neubert Architects, INC. 2022

A.020c

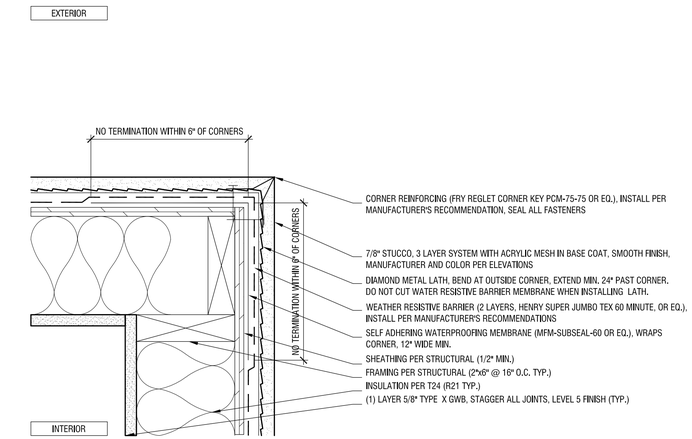

10 STUCCO PLAN DETAIL, OUTSIDE CORNER
SCALE: 3"=1'-0"

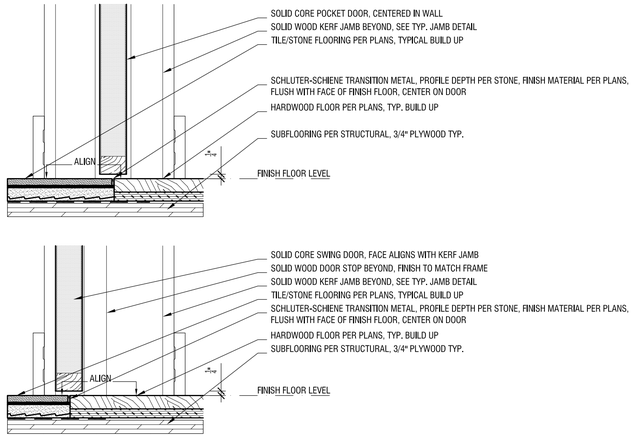

08 FLUSH FLOOR TRANSITION DETAIL AT DOOR
SCALE: 3"=1'-0"

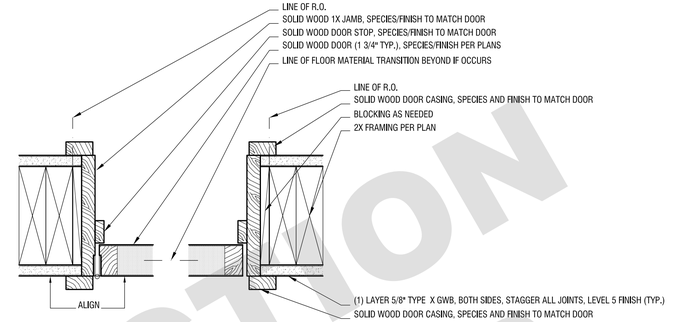

07 FRAMED DOOR JAMB DETAIL
SCALE: 3"=1'-0"

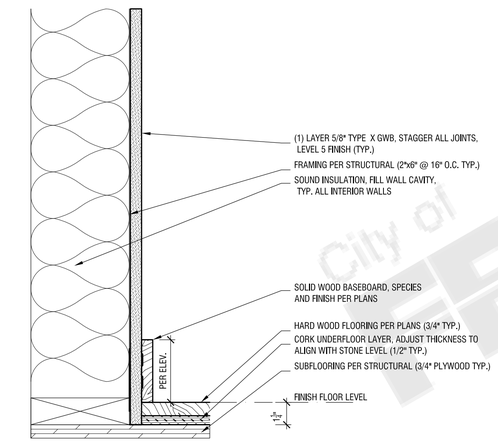

06 PROUD BASEBOARD DETAIL
SCALE: 3"=1'-0"

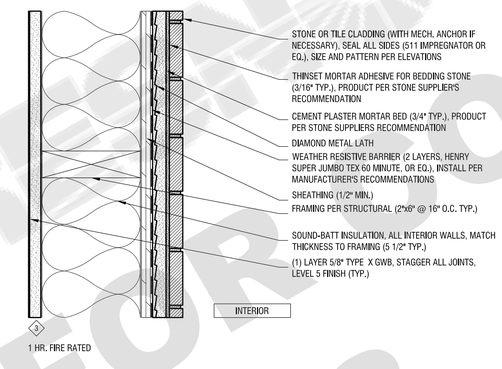

05 INTERIOR PARTITION
SCALE: 3"=1'-0"

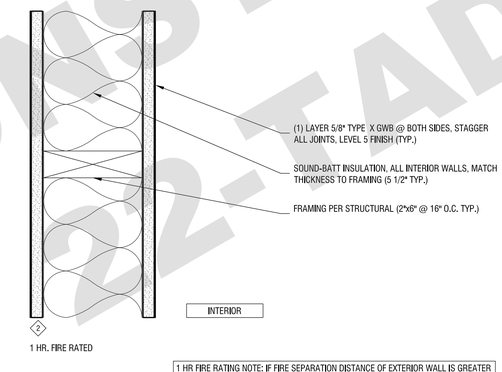

04 INTERIOR PARTITION
SCALE: 3"=1'-0"

1 HR FIRE RATING NOTE: IF FIRE SEPARATION DISTANCE OF EXTERIOR WALL IS GREATER THAN 10', THEN EXTERIOR WALL OF TYPE V-B DOES NOT HAVE TO BE FIRE RATED (DENSGLASS SHEATHING DOES NOT NEED TO BE INSTALLED).

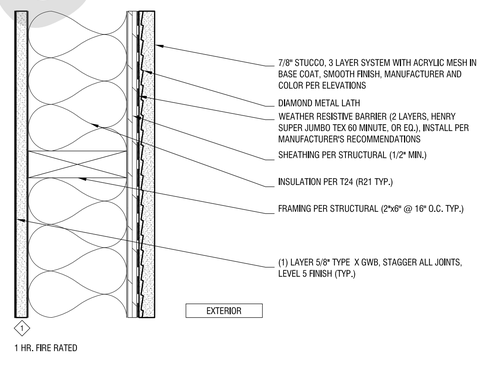

03 EXTERIOR WALL
SCALE: 3"=1'-0"

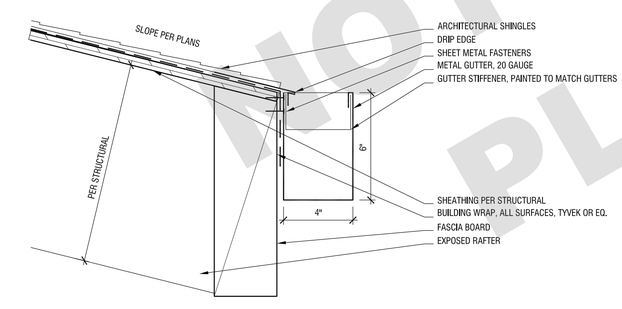

09 ROOF EAVE, SLOPED WITH GUTTER DETAIL
SCALE: 3"=1'-0"

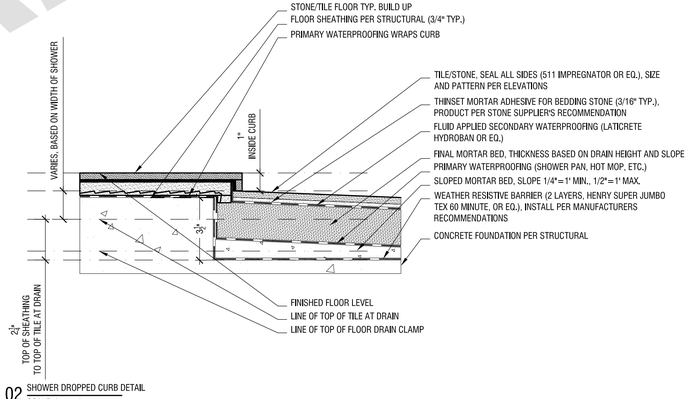

02 SHOWER DROPPED CURB DETAIL
SCALE: 3"=1'-0"

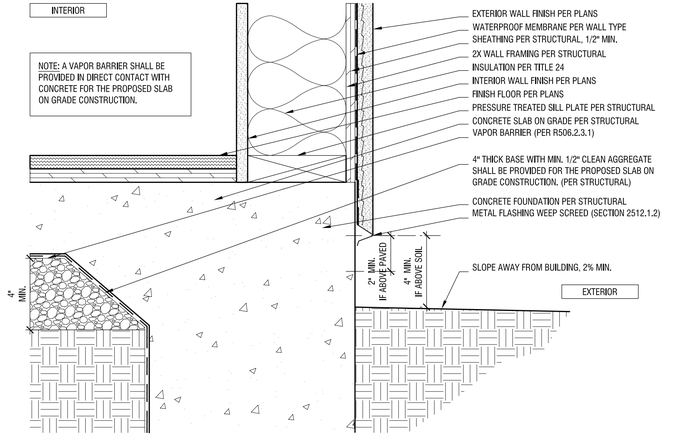

01 SLAB ON GRADE EDGE DETAIL
SCALE: 3"=1'-0"

CITY OF FRESNO
NOT FOR CONSTRUCTION
PLAN 3
R22-ADU-003

ANX

AARON NEUBERT ARCHITECTS

ADU PROGRAM

OWNER:

CITY OF FRESNO
PLANNING AND DEVELOPMENT DEPARTMENT
2600 FRESNO STREET, 3RD FLOOR
FRESNO, CA 93721

ARCHITECT:

AARON NEUBERT ARCHITECTS, INC.
2814 ROWENA AVENUE, SUITE ONE
LOS ANGELES, CALIFORNIA 90039
P. 323.953.4700 F. 323.953.4900

AARON NEUBERT CA# C-29005

STRUCTURAL ENGINEER:

NOUS ENGINEERING, INC.
600 WILSHIRE BOULEVARD, SUITE 760
LOS ANGELES, CALIFORNIA 90017
P. 213.627.6687

MEP ENGINEER:

INNODEZ DESIGN AND ENGINEERING
726 FOXBROUGH PLACE
PLEASANTON, CALIFORNIA 94566
P. 424.414.0997

REVISION: DATE: COMMENT:

ISSUE:

2 REVISION #2 06.03.22 PLAN CHECK CORRECTIONS
1 REVISION #1 04.04.22 PLAN CHECK CORRECTIONS

SEAL:



Project No. 2104

ADU PROGRAM
CITY OF FRESNO
CALIFORNIA

DRAWING TITLE:

TYPICAL DETAIL
GABLE

DATE: JUNE 3, 2022
SCALE: 3"=1'-0"
DRAWN BY: ANX

© Aaron Neubert Architects, INC. 2022

A.020g

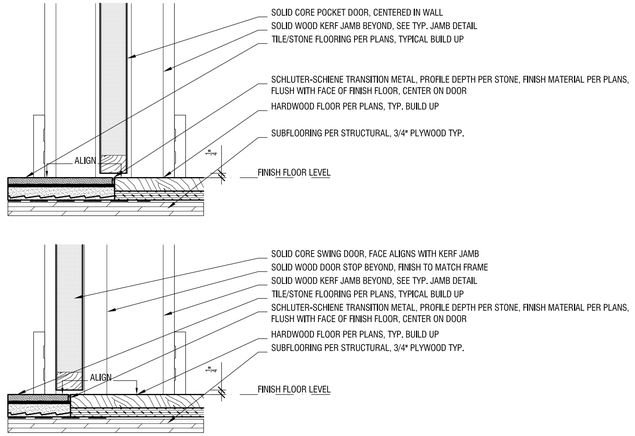

08 FLUSH FLOOR TRANSITION DETAIL AT DOOR
SCALE: 3" = 1'-0"

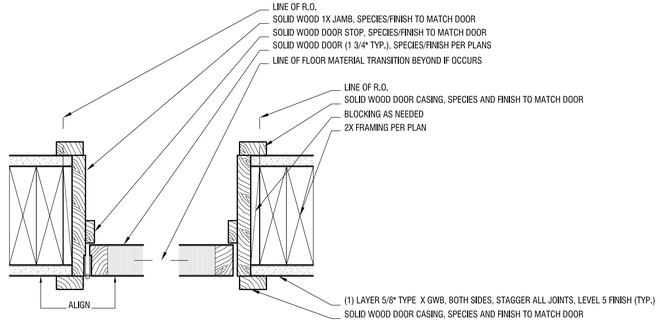

07 FRAMED DOOR JAMB DETAIL
SCALE: 3" = 1'-0"

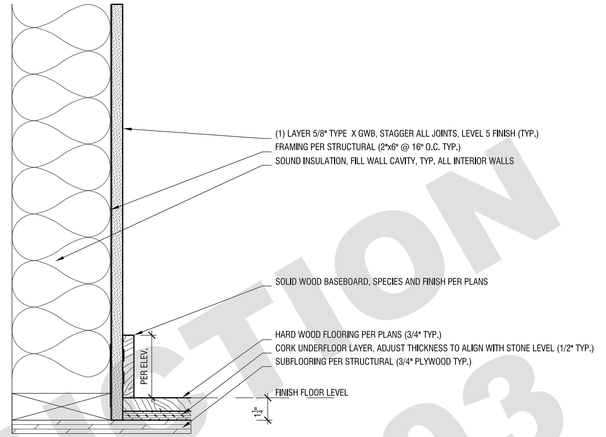

06 PROUD BASEBOARD DETAIL
SCALE: 3" = 1'-0"

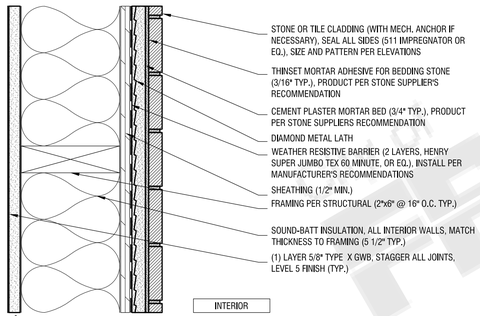

05 INTERIOR PARTITION
SCALE: 3" = 1'-0"

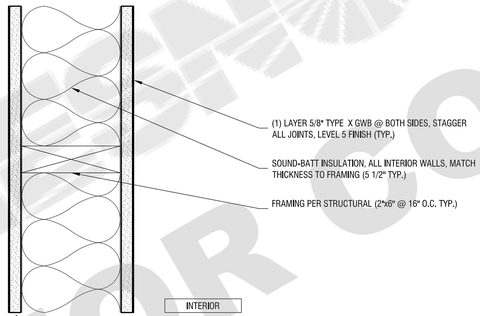

04 INTERIOR PARTITION
SCALE: 3" = 1'-0"

1 HR FIRE RATING NOTE: IF FIRE SEPARATION DISTANCE OF EXTERIOR WALL IS GREATER THAN 10', THEN EXTERIOR WALL OF TYPE V-B DOES NOT HAVE TO BE FIRE RATED (DENSGLASS SHEATHING DOES NOT NEED TO BE INSTALLED).

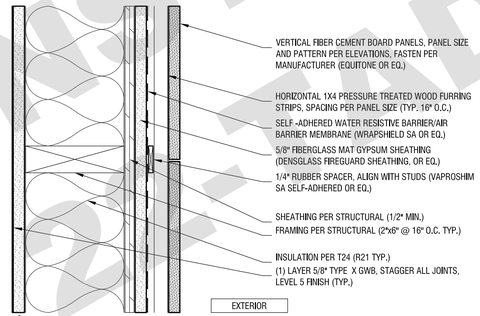

03A EXTERIOR WALL
SCALE: 3" = 1'-0"

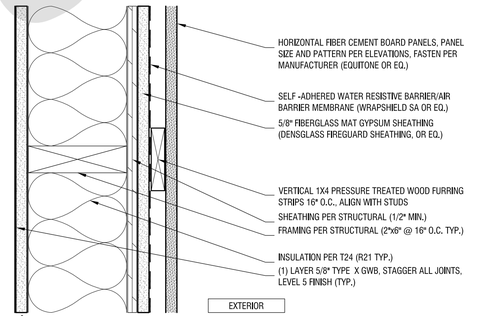

03 EXTERIOR WALL
SCALE: 3" = 1'-0"

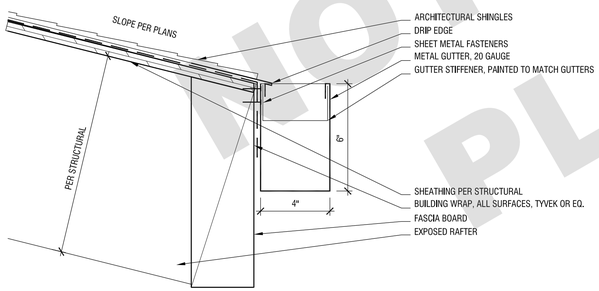

09 ROOF EAVE, SLOPED WITH GUTTER DETAIL
SCALE: 3" = 1'-0"

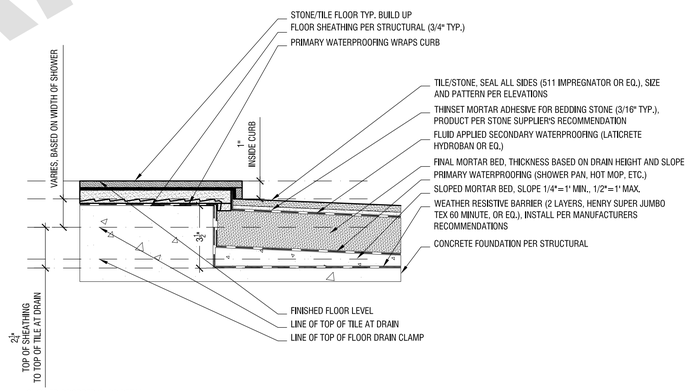

02 SHOWER DROPPED CURB DETAIL
SCALE: 3" = 1'-0"

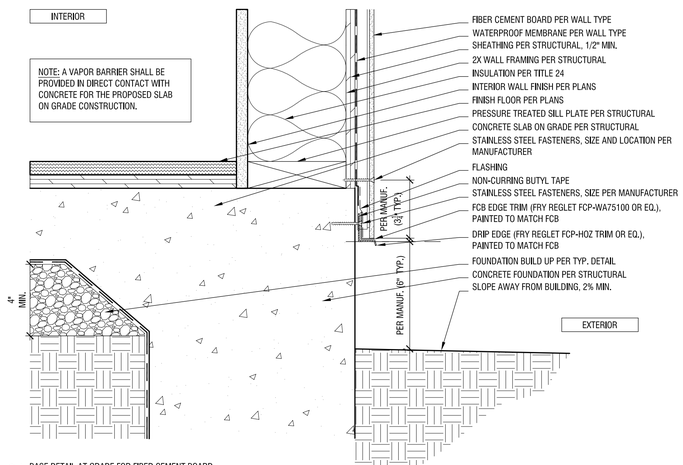

01 BASE DETAIL AT GRADE FOR FIBER CEMENT BOARD
SCALE: 3" = 1'-0"

NOT FOR CONSTRUCTION
PLAN SET
ADU-003

ANX

AARON NEUBERT ARCHITECTS

ADU PROGRAM

OWNER:

CITY OF FRESNO
PLANNING AND DEVELOPMENT DEPARTMENT
2600 FRESNO STREET, 3RD FLOOR
FRESNO, CA 93721

ARCHITECT:

AARON NEUBERT ARCHITECTS, INC.
2814 ROWENA AVENUE, SUITE ONE
LOS ANGELES, CALIFORNIA 90039
P. 323.953.4700 F. 323.953.4900

AARON NEUBERT CA# C-29005

STRUCTURAL ENGINEER:

NOUS ENGINEERING, INC.
600 WILSHIRE BOULEVARD, SUITE 760
LOS ANGELES, CALIFORNIA 90017
P. 213.627.6687

MEP ENGINEER:

INNODEZ DESIGN AND ENGINEERING
726 FOXBROUGH PLACE
PLEASANTON, CALIFORNIA 94566
P. 424.414.0997

REVISION: DATE: COMMENT:

ISSUE:

2 REVISION #2 06.03.22 PLAN CHECK CORRECTIONS

1 REVISION #1 04.04.22 PLAN CHECK CORRECTIONS

SEAL:



Project No. 2104

ADU PROGRAM
CITY OF FRESNO
CALIFORNIA

DRAWING TITLE:

TYPICAL DETAIL
CONTEMPORARY

DATE: JUNE 3, 2022
SCALE: 3" = 1'-0"
DRAWN BY: ANX

© Aaron Neubert Architects, INC. 2022

A.020s

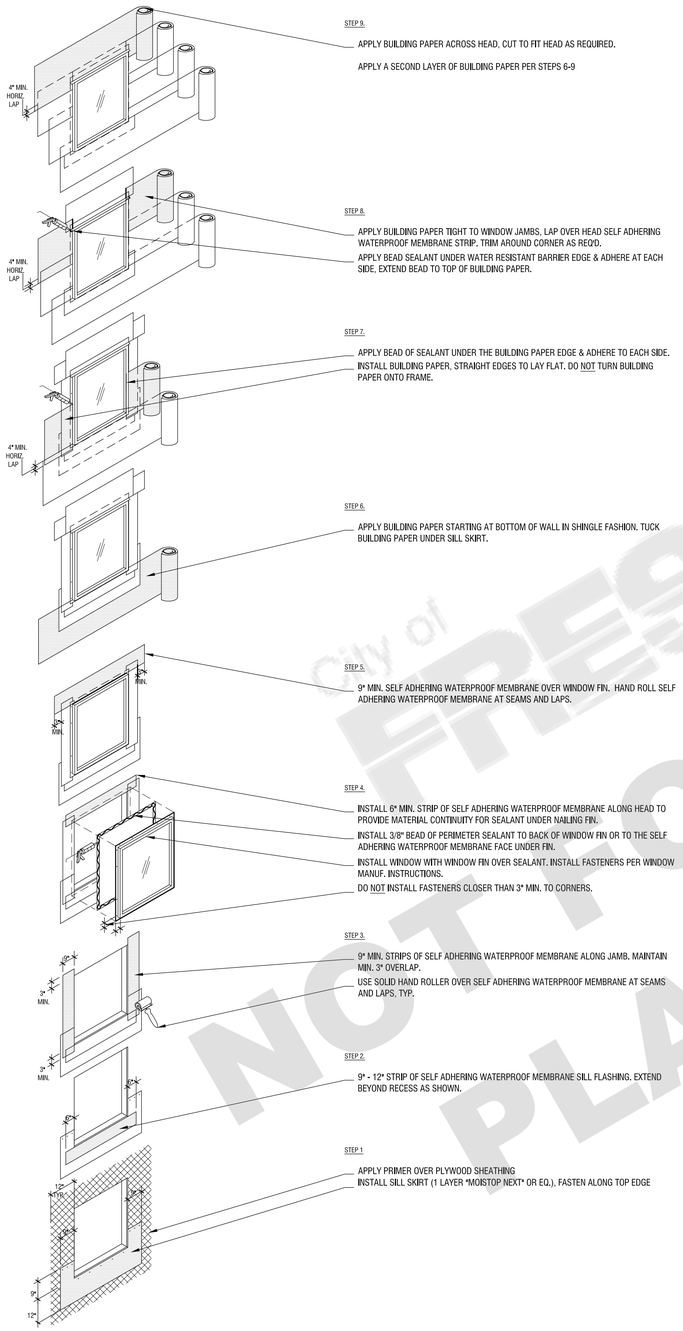

03 FLUSH WINDOW FLASHING SEQUENCE
SCALE: N.T.S.

FLASHING & PENETRATION NOTES

THE FOLLOWING MATERIAL WILL BE USED ON ALL WALL PENETRATIONS. THE STEPS FOR APPLYING THE MATERIAL ARE FOR A GENERIC GUIDE. VERIFY THE RECOMMENDATIONS OF THE MATERIAL MANUFACTURE USED ON THE PROJECT AND WHERE THEY DIFFER FROM THE GENERIC DETAILS ON THE SHEET, FOLLOW THE MANUFACTURER'S RECOMMENDATIONS.

1. SELF ADHERING WATERPROOF MEMBRANE TO BE 25 MILS & SELF SEALING BY ONE OF THE FOLLOWING MANUFACTURER'S:
   A) FORTIFLASH 25 BY FORTIBER.
   B) VYCOR V25 SHIELD BY W.R. GRACE & CO.
   C) PREFORMED CORNER FLASHING TO BE TLS GS 100 BY TLS.
2. BUILDING PAPER TO BE 2 LAYERS OF 60 MINUTE TYPE "D".
   A) SUPER JUMBO TEX-60 MINUTE BY FORTIFLASH.
3. SHEATHING PRIMER-12" AROUND OPENING.
   A) WR GRACE PERM-A-BARRIER-WB PRIMER (USE W/ VYCOR).
   B) HENRY "AQUA-TAC PRIMER (USE WITH FORTIFLASH).
   C) 3M "99" SPRAY ADHESIVE.
4. SEALANTS (VERIFY COMPATIBILITY WITH WINDOW & WATERPROOFING MANUFACTURE).
   A) TOPS #900
   B) FORTIFIBER "MOISTOP SEALANT" - (USE WITH FORTIFLASH).
   C) SCHNEE - MOREHEAD "PROINSTALL 7100"
5. PROVIDE FIELD MOCK UP OF EACH PENETRATION TYPE FOR APPROVAL.
6. PRE MADE CORNERS ARE ALLOWED.

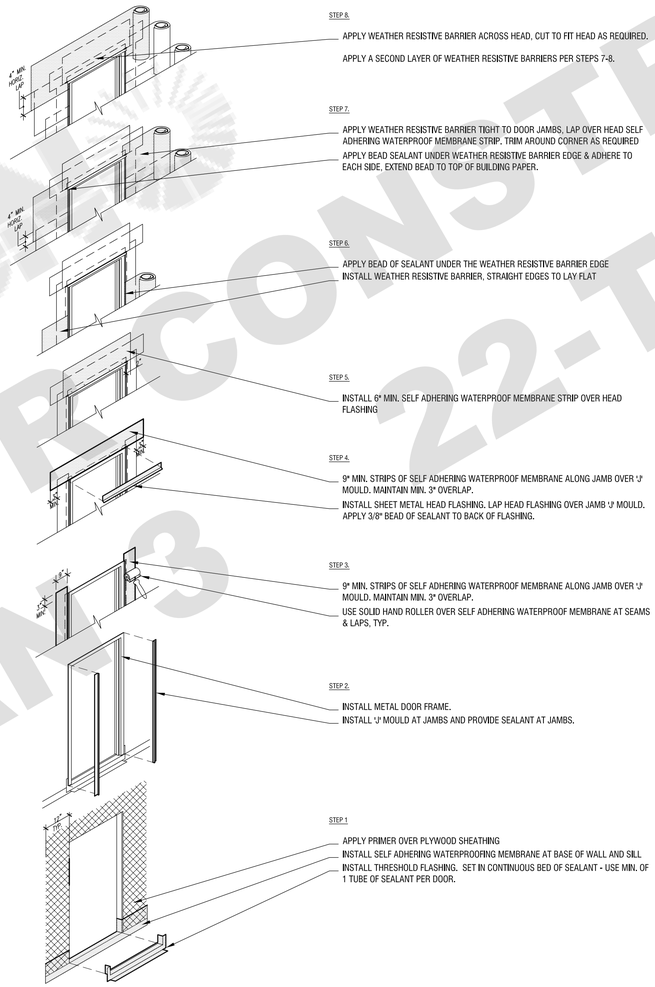

02 DOOR FLASHING
SCALE: N.T.S.

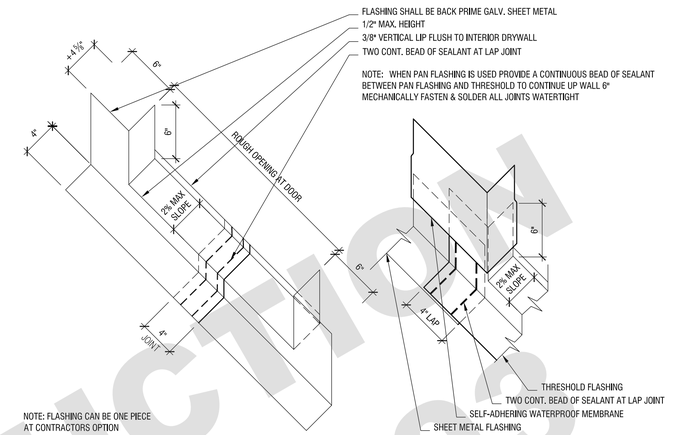

NOTE: FLASHING CAN BE ONE PIECE AT CONTRACTORS OPTION

04 TWO PIECE FLASHING AT DOOR THRESHOLD
SCALE: N.T.S.

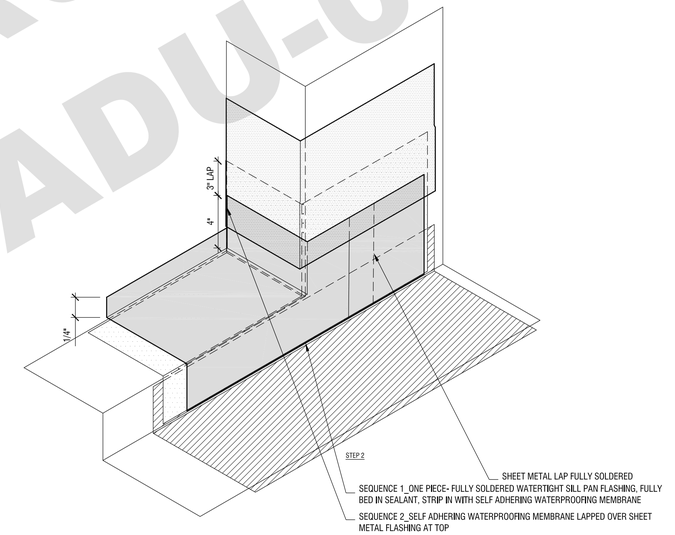

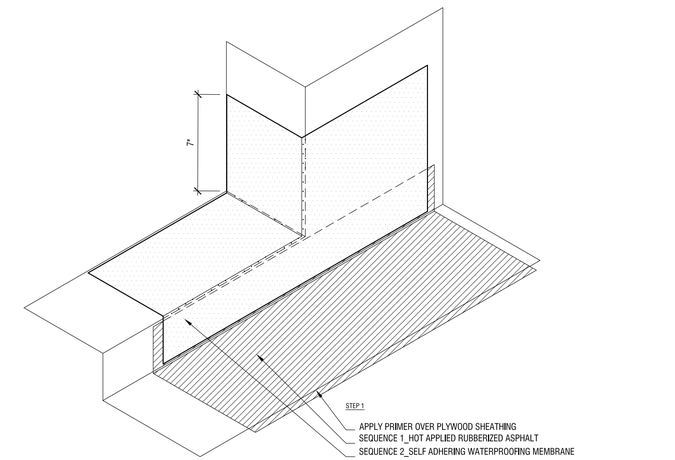

01 SILL PAN FLASHING SEQUENCE
SCALE: N.T.S.

City of FRESNO
NOT FOR CONSTRUCTION
PLAN3 22-TADU-003

ANX

AARON NEUBERT ARCHITECTS

ADU PROGRAM

OWNER:

CITY OF FRESNO
PLANNING AND DEVELOPMENT DEPARTMENT
2600 FRESNO STREET, 3RD FLOOR
FRESNO, CA 93721

ARCHITECT:

AARON NEUBERT ARCHITECTS, INC.
2814 ROWENA AVENUE, SUITE ONE
LOS ANGELES, CALIFORNIA 90039
P. 323.953.4700 F. 323.953.4900

AARON NEUBERT CA# C-29005

STRUCTURAL ENGINEER:

NOUS ENGINEERING, INC.
600 WILSHIRE BOULEVARD, SUITE 760
LOS ANGELES, CALIFORNIA 90017
P. 213.627.6687

MEP ENGINEER:

INNODEZ DESIGN AND ENGINEERING
726 FOXBROUGH PLACE
PLEASANTON, CALIFORNIA 94566
P. 424.414.0997

REVISION:	DATE:	COMMENT:
ISSUE:		
2 REVISION #2 06.03.22		PLAN CHECK CORRECTIONS
1 REVISION #1 04.04.22		PLAN CHECK CORRECTIONS

SEAL:

LICENSED ARCHITECT
CHRISTOPHER A. NEUBERT
C-29005
05.31.23
RENEWAL DATE
STATE OF CALIFORNIA

Project No. 2104

ADU PROGRAM
CITY OF FRESNO
CALIFORNIA

DRAWING TITLE:

TYPICAL DETAIL
FLASHING

DATE: JUNE 3, 2022
SCALE: N.T.S.
DRAWN BY: ANX

© Aaron Neubert Architects, INC. 2022

A.021

Door landing requirements:
a)Width of door with 36" minimum. (CRC section R311.3)
b)No more than 1½"lower than the top of the threshold. (CRC section R311.3.1)
c)Not more than 7¾" below the top of the threshold provided that the door does not swing over the landing or floor. (CRC section R311.3.1)
d)Specify the egress door to be side hinged and shall provide a clear width of not less than 32" where measured between the face of the door and the stop, with the door opened 90 degrees. (CRC section 311.2)
e)Specify the minimum net height of the required egress door to be not less than 78" measured from the top of threshold to the bottom of the door stop. (CRC section 311.2)

DOOR SCHEDULE

UNIT	QTY.	TYPE	LOCATION	O.D. WIDTH	O.D. HEIGHT	U-FACTOR	SHGC	GLASS	FINISH	HINGES	MANUFACTURER #	COMMENTS	HARDWARE GROUP
01	1	FIBERGLASS DOOR	ENTRY	36"	82"	-	-	-	-	SQ. STN. STL.	-	-	-
02	1	SOLID WOOD DOOR 1-3/4" FLUSH PANEL	BATH	32"	80"	-	-	-	-	SQ. STN. STL.	-	-	-
03	1	SOLID WOOD DOOR 1-3/4" FLUSH PANEL	PRIMARY BEDROOM	32"	80"	-	-	-	-	SQ. STN. STL.	-	-	-
04	1	SOLID WOOD DOOR 1-3/4" FLUSH PANEL	SECONDARY BEDROOM	32"	80"	-	-	-	-	SQ. STN. STL.	-	-	-
05	1	SOLID WOOD DOOR FLUSH PANEL BIFOLD	W/D CLOSET	38"	80"	-	-	-	-	-	-	BIFOLD DOOR	-
06	1	SOLID WOOD DOOR 1-3/4" FLUSH PANEL	PRIMARY BEDROOM CLOSET	80"	80"	-	-	-	-	-	-	TWO PANEL SLIDING CLOSET	-
07	1	SOLID WOOD DOOR FLUSH PANEL BIFOLD	SECONDARY BEDROOM CLOSET	36"	80"	-	-	-	-	-	-	BIFOLD DOOR	-

NOTE:
ALL WINDOWS AND DOOR ARE VIEWED FROM EXTERIOR LOOKING AT THE WINDOWS AND DOORS

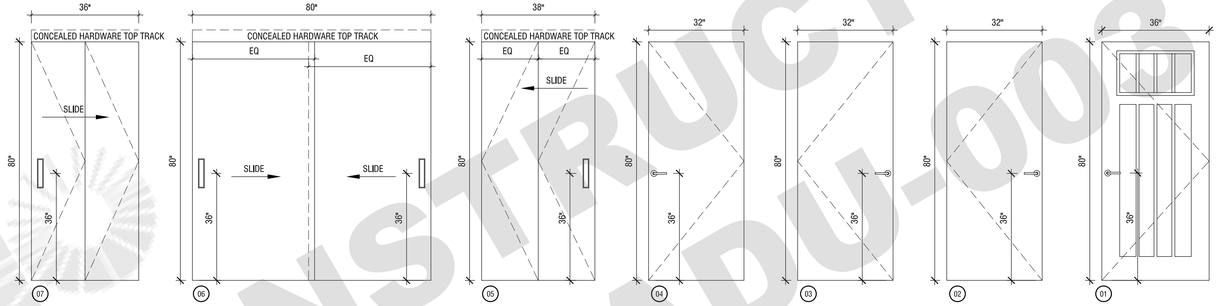

03 DOOR SCHEDULE
SCALE: 1/2" = 1'-0"

WINDOW SCHEDULE

UNIT	QTY.	TYPE	LOCATION	O.D. WIDTH	O.D. HEIGHT	R.O. WIDTH	R.O. HEIGHT	GLASS	U-FACTOR	SHGC	FINISH	SCREEN	MODEL #	COMMENTS
01	1	DBL SLIDER	KITCHEN	42"	38"	42 3/4"	38 3/4"				VINYL/WHITE	YES		
02	1	DBL SLIDER	LIVING	72"	48"	72 3/4"	48 3/4"				VINYL/WHITE	YES		
03	1	DBL SLIDER	LIVING	72"	48"	72 3/4"	48 3/4"				VINYL/WHITE	YES		
04	1	DBL SLIDER	SECONDARY BEDROOM	72"	48"	72 3/4"	48 3/4"				VINYL/WHITE	YES		
05	1	SNGL HUNG	SECONDARY BEDROOM	36"	48"	36 3/4"	48 3/4"				VINYL/WHITE	YES		
T05	1	FIXED	SECONDARY BEDROOM	36"	24"	36 3/4"	24 3/4"				VINYL/WHITE	-		
06	1	SNGL HUNG	PRIMARY BEDROOM	36"	48"	36 3/4"	48 3/4"				VINYL/WHITE	YES		
T06	1	FIXED	PRIMARY BEDROOM	36"	24"	36 3/4"	24 3/4"				VINYL/WHITE	-		
07	1	DBL SLIDER	PRIMARY BEDROOM	72"	48"	72 3/4"	48 3/4"				VINYL/WHITE	YES		
08	1	DBL SLIDER	BATH	60"	20"	60 3/4"	20 3/4"				VINYL/WHITE	YES		

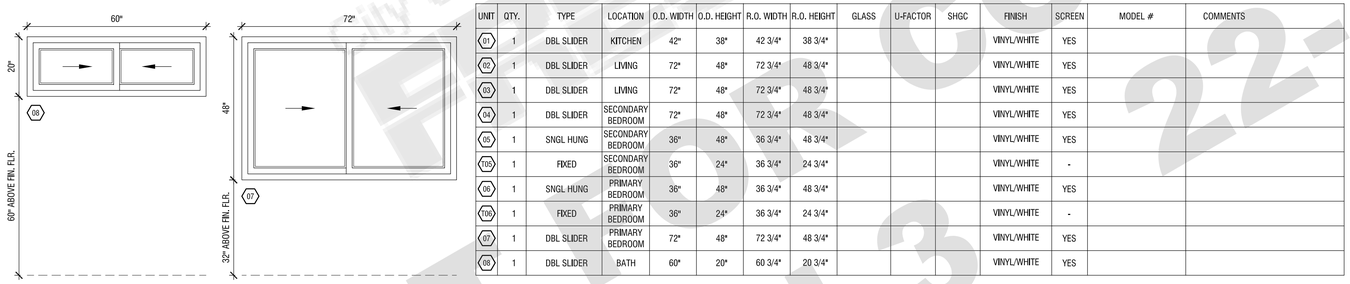

NOTE:
ALL WINDOWS AND DOOR ARE VIEWED FROM EXTERIOR LOOKING AT THE WINDOWS AND DOORS

02 WINDOW SCHEDULE
SCALE: 1/2" = 1'-0"

NOTE:
ALL GLASS TO BE CLEAR TEMPERED

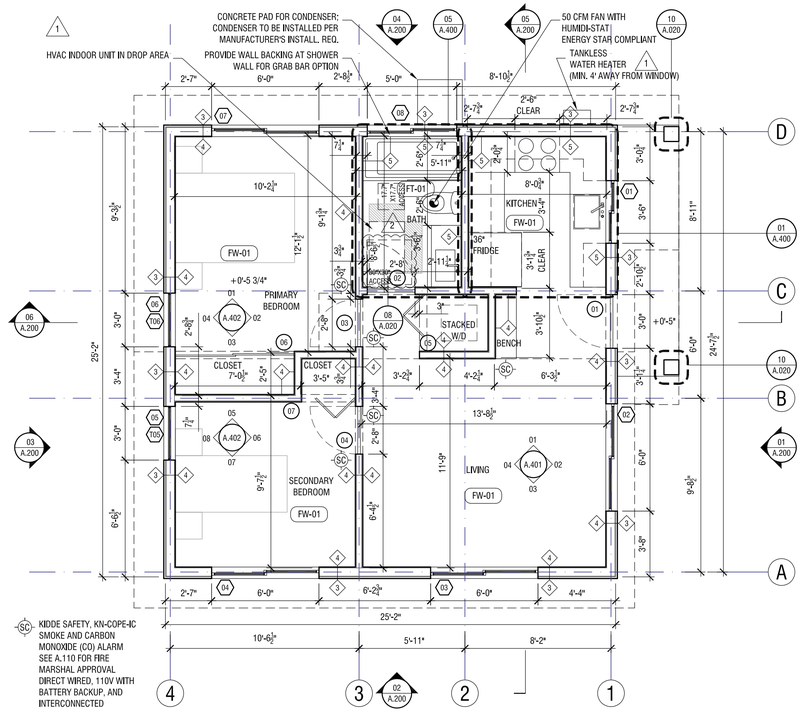

01 FLOOR PLAN
SCALE: 1/4" = 1'-0"

CITY OF FRESNO
NOT FOR CONSTRUCTION
PLAN CHECK
22-ADU-008

ANX
AARON NEUBERT ARCHITECTS

ADU PROGRAM

OWNER:
CITY OF FRESNO
PLANNING AND DEVELOPMENT DEPARTMENT
2600 FRESNO STREET, 3RD FLOOR
FRESNO, CA 93721

ARCHITECT:
AARON NEUBERT ARCHITECTS, INC.
2814 ROWENA AVENUE, SUITE ONE
LOS ANGELES, CALIFORNIA 90039
P. 323.953.4700 F. 323.953.4900
AARON NEUBERT CA# C-29005

STRUCTURAL ENGINEER:
NOUS ENGINEERING, INC.
600 WILSHIRE BOULEVARD, SUITE 760
LOS ANGELES, CALIFORNIA 90017
P. 213.627.6687

MEP ENGINEER:
INNODEZ DESIGN AND ENGINEERING
726 FOXBROUGH PLACE
PLEASANTON, CALIFORNIA 94566
P. 424.414.0997

REVISION:	DATE:	COMMENT:
ISSUE:		
2 REVISION #2 06.03.22		PLAN CHECK CORRECTIONS
1 REVISION #1 04.04.22		PLAN CHECK CORRECTIONS

SEAL:



Project No. 2104
ADU PROGRAM
CITY OF FRESNO
CALIFORNIA

DRAWING TITLE:
ADU 03 - CRAFTSMAN
FLOOR PLAN
WINDOW/DOOR SCHEDULE
633 SF

DATE: JUNE 3, 2022
SCALE: AS NOTED
DRAWN BY:

© Aaron Neubert Architects, INC. 2022

A.100c

Door landing requirements:
a)Width of door with 36" minimum. (CRC section R311.3)
b)No more than 1½"lower than the top of the threshold. (CRC section R311.3.1)
c)Not more than 7¾" below the top of the threshold provided that the door does not swing over the landing or floor. (CRC section R311.3.1)
d)Specify the egress door to be side hinged and shall provide a clear width of not less than 32" where measured between the face of the door and the stop, with the door opened 90 degrees. (CRC section 311.2)
e)Specify the minimum net height of the required egress door to be not less than 78" measured from the top of threshold to the bottom of the door stop. (CRC section 311.2)

DOOR SCHEDULE

UNIT	QTY.	TYPE	LOCATION	O.D. WIDTH	O.D. HEIGHT	U-FACTOR	SHGC	GLASS	FINISH	HINGES	MANUFACTURER #	COMMENTS	HARDWARE GROUP
01	1	FIBERGLASS DOOR	ENTRY	36"	80"	-	-	-	-	SQ. STN. STL.	-	-	-
02	1	SOLID WOOD DOOR 1-3/4" FLUSH PANEL	BATH	32"	80"	-	-	-	-	SQ. STN. STL.	-	-	-
03	1	SOLID WOOD DOOR 1-3/4" FLUSH PANEL	BEDROOM	32"	80"	-	-	-	-	SQ. STN. STL.	-	-	-
05	1	SOLID WOOD DOOR FLUSH PANEL BIFOLD	W/D CLOSET	38"	80"	-	-	-	-	-	-	BIFOLD DOOR	-
06	1	SOLID WOOD DOOR 1-3/4" FLUSH PANEL	BEDROOM CLOSET	80"	80"	-	-	-	-	-	-	TWO PANEL SLIDING CLOSET	-
07	1	SOLID WOOD DOOR FLUSH PANEL BIFOLD	LIVING CLOSET	36"	80"	-	-	-	-	-	-	BIFOLD DOOR	-

NOTE:
ALL WINDOWS AND DOOR ARE VIEWED FROM EXTERIOR
LOOKING AT THE WINDOWS AND DOORS

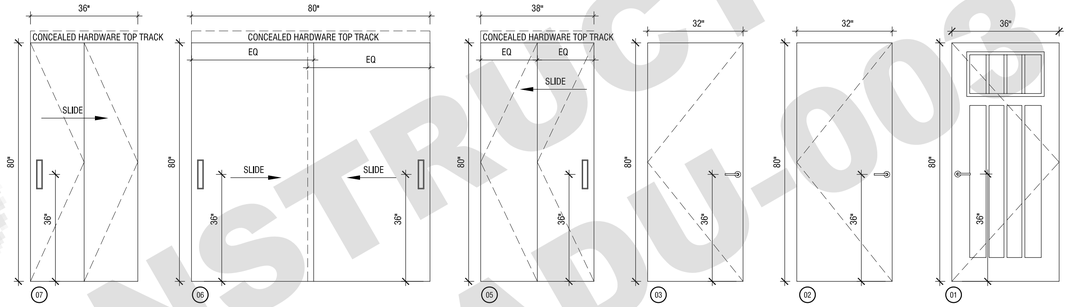

1
NOTE:
ALL GLASS TO BE CLEAR TEMPERED

03 DOOR SCHEDULE
SCALE: 1/2" = 1'-0"

WINDOW SCHEDULE

UNIT	QTY.	TYPE	LOCATION	O.D. WIDTH	O.D. HEIGHT	R.O. WIDTH	R.O. HEIGHT	GLASS	U-FACTOR	SHGC	FINISH	SCREEN	MODEL #	COMMENTS
01	1	DBL SLIDER	KITCHEN	42"	38"	42 3/4"	38 3/4"				VINYL/WHITE	-		
02	1	DBL SLIDER	LIVING	72"	48"	72 3/4"	48 3/4"				VINYL/WHITE	-		
03	1	DBL SLIDER	LIVING	72"	48"	72 3/4"	48 3/4"				VINYL/WHITE	-		
04	1	DBL SLIDER	LIVING	72"	48"	72 3/4"	48 3/4"				VINYL/WHITE	-		
05	1	SNGL HUNG	LIVING	36"	48"	36 3/4"	48 3/4"				VINYL/WHITE	-		
105	1	FIXED	LIVING	36"	24"	36 3/4"	24 3/4"				VINYL/WHITE	-		
06	1	SNGL HUNG	BEDROOM	36"	48"	36 3/4"	48 3/4"				VINYL/WHITE	-		
106	1	FIXED	BEDROOM	36"	24"	36 3/4"	24 3/4"				VINYL/WHITE	-		
07	1	DBL SLIDER	BEDROOM	72"	48"	72 3/4"	48 3/4"				VINYL/WHITE	-		
08	1	DBL SLIDER	BATH	60"	20"	60 3/4"	20 3/4"				VINYL/WHITE	-		

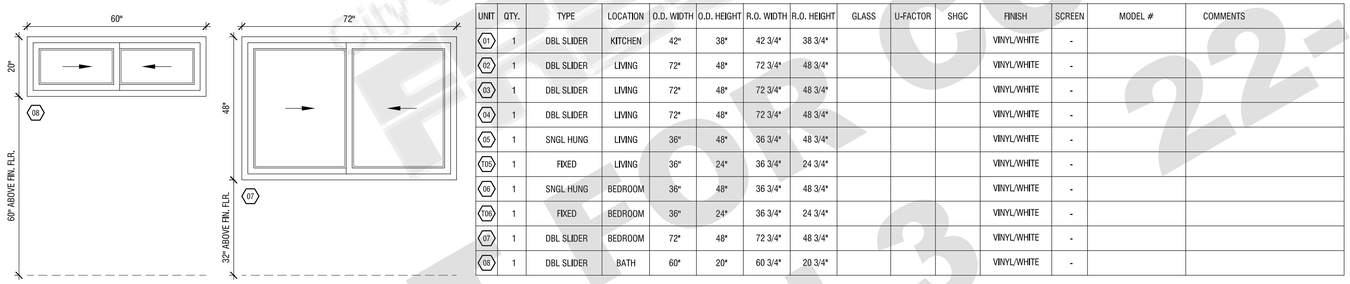

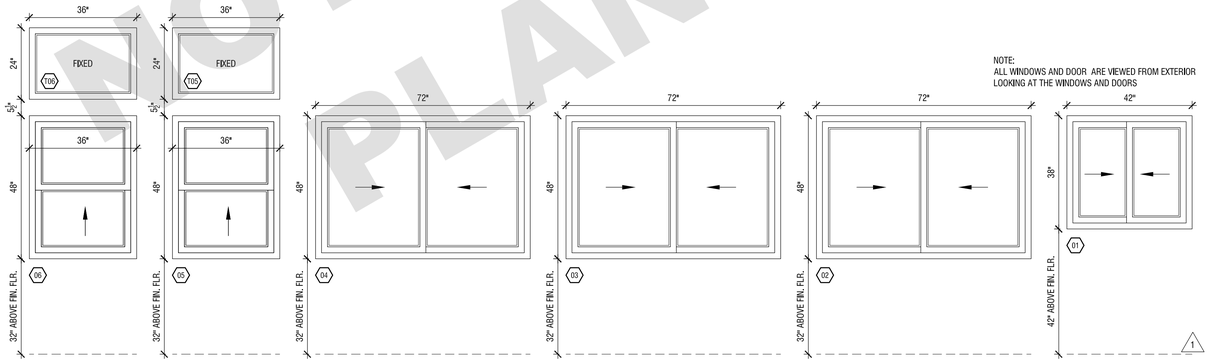

NOTE:
ALL WINDOWS AND DOOR ARE VIEWED FROM EXTERIOR
LOOKING AT THE WINDOWS AND DOORS

1

02 WINDOW SCHEDULE
SCALE: 1/2" = 1'-0"

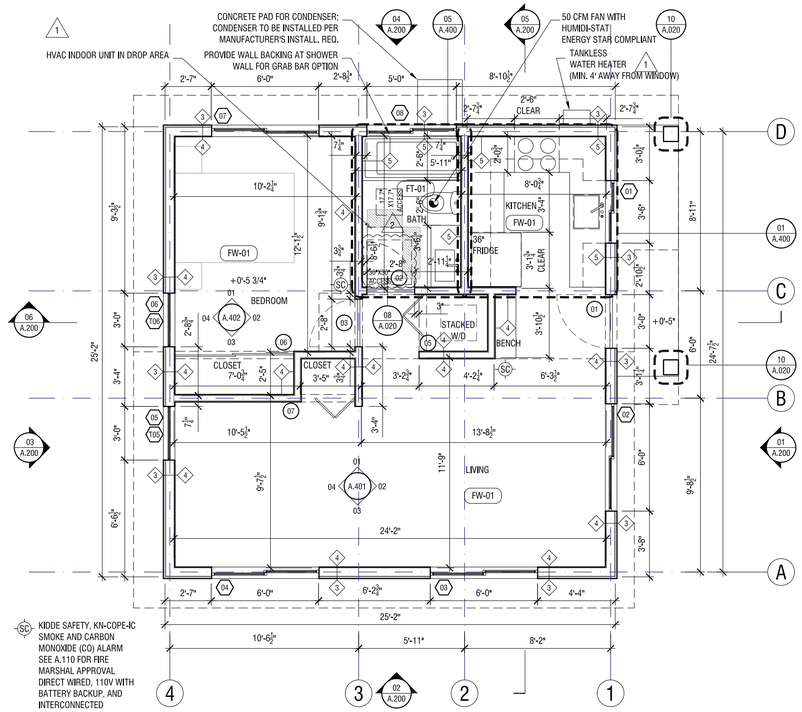

SC KIDDE SAFETY, KN-COPE-IC SMOKE AND CARBON MONOXIDE (CO) ALARM SEE A.110 FOR FIRE MARSHAL APPROVAL DIRECT WIRED, 110V WITH BATTERY BACKUP, AND INTERCONNECTED

01 FLOOR PLAN
SCALE: 1/4" = 1'-0"

CITY OF FRESNO
NOT FOR CONSTRUCTION
PLAN CHECK
22-ADU-008

ANX

AARON NEUBERT ARCHITECTS

ADU PROGRAM

OWNER:
CITY OF FRESNO
PLANNING AND DEVELOPMENT DEPARTMENT
2600 FRESNO STREET, 3RD FLOOR
FRESNO, CA 93721

ARCHITECT:
AARON NEUBERT ARCHITECTS, INC.
2814 ROWENA AVENUE, SUITE ONE
LOS ANGELES, CALIFORNIA 90039
P. 323.953.4700 F. 323.953.4900

AARON NEUBERT CA# C-29005

STRUCTURAL ENGINEER:
NOUS ENGINEERING, INC.
600 WILSHIRE BOULEVARD, SUITE 760
LOS ANGELES, CALIFORNIA 90017
P. 213.627.6687

MEP ENGINEER:
INNODEZ DESIGN AND ENGINEERING
726 FOXBROUGH PLACE
PLEASANTON, CALIFORNIA 94566
P. 424.414.0997

REVISION:	DATE:	COMMENT:
ISSUE:		
2	REVISION #2 06.03.22	PLAN CHECK CORRECTIONS
1	REVISION #1 04.04.22	PLAN CHECK CORRECTIONS

SEAL:
LICENSED ARCHITECT AARON NEUBERT C-29005 RENEWAL 08.31.23 STATE OF CALIFORNIA

Project No. 2104
ADU PROGRAM
CITY OF FRESNO
CALIFORNIA

DRAWING TITLE:
ADU 03 ALT - CRAFTSMAN
FLOOR PLAN
WINDOW/DOOR SCHEDULE
633 SF

DATE: JUNE 3, 2022
SCALE: AS NOTED
DRAWN BY:

A.100c_alt

© Aaron Neubert Architects, Inc. 2022

Door landing requirements:
a)Width of door with 36" minimum. (CRC section R311.3)
b)No more than 1½"lower than the top of the threshold. (CRC section R311.3.1)
c)Not more than 7¾" below the top of the threshold provided that the door does not swing over the landing or floor. (CRC section R311.3.1)
d)Specify the egress door to be side hinged and shall provide a clear width of not less than 32" where measured between the face of the door and the stop, with the door opened 90 degrees. (CRC section 311.2)
e)Specify the minimum net height of the required egress door to be not less than 78" measured from the top of threshold to the bottom of the door stop. (CRC section 311.2)

DOOR SCHEDULE

UNIT	QTY.	TYPE	LOCATION	O.D. WIDTH	O.D. HEIGHT	U-FACTOR	SHGC	GLASS	FINISH	HINGES	MANUFACTURER #	COMMENTS	HARDWARE GROUP
01	1	FIBERGLASS DOOR WITH TEMP. LITE	ENTRY	36"	80"	-	-	-	-	SQ. STN. STL.	-	-	-
02	1	SOLID WOOD DOOR 1-3/4" FLUSH PANEL	BATH	32"	80"	-	-	-	-	SQ. STN. STL.	-	-	-
03	1	SOLID WOOD DOOR 1-3/4" FLUSH PANEL	PRIMARY BEDROOM	32"	80"	-	-	-	-	SQ. STN. STL.	-	-	-
04	1	SOLID WOOD DOOR 1-3/4" FLUSH PANEL	SECONDARY BEDROOM	32"	80"	-	-	-	-	SQ. STN. STL.	-	-	-
05	1	SOLID WOOD DOOR FLUSH PANEL BIFOLD	W/D CLOSET	38"	80"	-	-	-	-	-	-	BIFOLD DOOR	-
06	1	SOLID WOOD DOOR 1-3/4" FLUSH PANEL	PRIMARY BEDROOM CLOSET	80"	80"	-	-	-	-	-	-	TWO PANEL SLIDING CLOSET	-
07	1	SOLID WOOD DOOR FLUSH PANEL BIFOLD	SECONDARY BEDROOM CLOSET	36"	80"	-	-	-	-	-	-	BIFOLD DOOR	-

NOTE:
ALL WINDOWS AND DOOR ARE VIEWED FROM EXTERIOR LOOKING AT THE WINDOWS AND DOORS

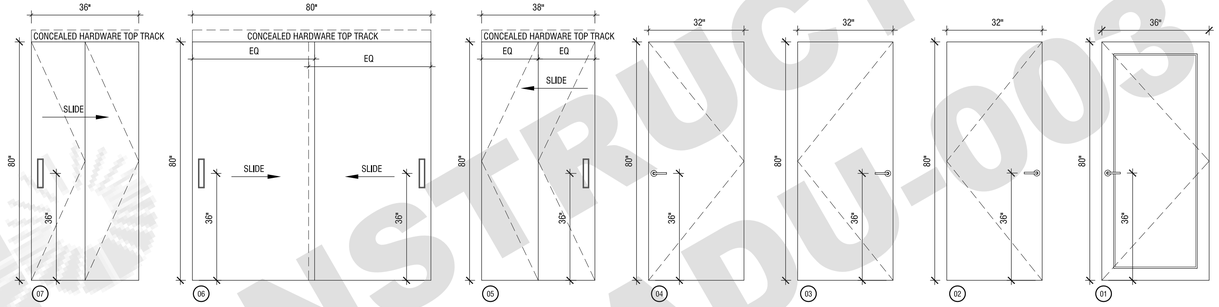

03 DOOR SCHEDULE
SCALE: 1/2"=1'-0"

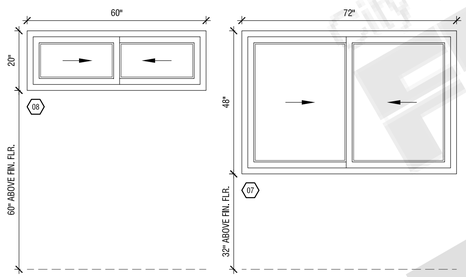

WINDOW SCHEDULE

UNIT	QTY.	TYPE	LOCATION	O.D. WIDTH	O.D. HEIGHT	R.O. WIDTH	R.O. HEIGHT	GLASS	U-FACTOR	SHGC	FINISH	SCREEN	MODEL #	COMMENTS
01	1	DBL SLIDER	KITCHEN	42"	38"	42 3/4"	38 3/4"				VINYL/WHITE	YES		
02	1	DBL SLIDER	LIVING	72"	48"	72 3/4"	48 3/4"				VINYL/WHITE	YES		
03	1	DBL SLIDER	LIVING	72"	48"	72 3/4"	48 3/4"				VINYL/WHITE	YES		
04	1	DBL SLIDER	SECONDARY BEDROOM	72"	48"	72 3/4"	48 3/4"				VINYL/WHITE	YES		
05	1	SNGL HUNG	SECONDARY BEDROOM	36"	48"	36 3/4"	48 3/4"				VINYL/WHITE	YES		
105	1	FIXED	SECONDARY BEDROOM	36"	24"	36 3/4"	24 3/4"				VINYL/WHITE	-		
06	1	SNGL HUNG	PRIMARY BEDROOM	36"	48"	36 3/4"	48 3/4"				VINYL/WHITE	YES		
106	1	FIXED	PRIMARY BEDROOM	36"	24"	36 3/4"	24 3/4"				VINYL/WHITE	-		
07	1	DBL SLIDER	PRIMARY BEDROOM	72"	48"	72 3/4"	48 3/4"				VINYL/WHITE	YES		
08	1	DBL SLIDER	BATH	60"	20"	60 3/4"	20 3/4"				VINYL/WHITE	YES		

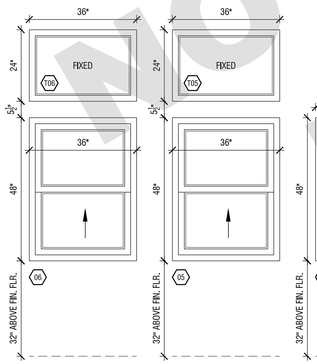

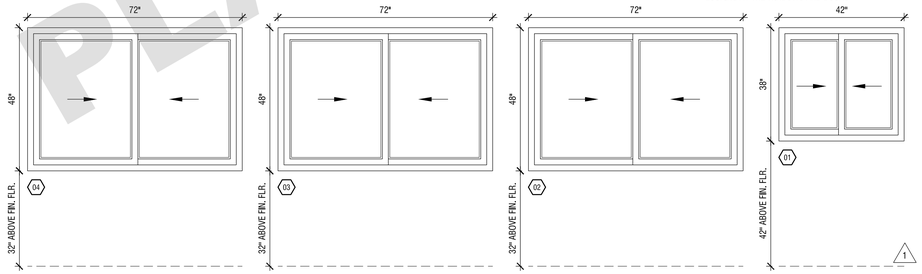

NOTE:
ALL WINDOWS AND DOOR ARE VIEWED FROM EXTERIOR LOOKING AT THE WINDOWS AND DOORS

02 WINDOW SCHEDULE
SCALE: 1/2"=1'-0"

NOTE:
ALL GLASS TO BE CLEAR TEMPERED

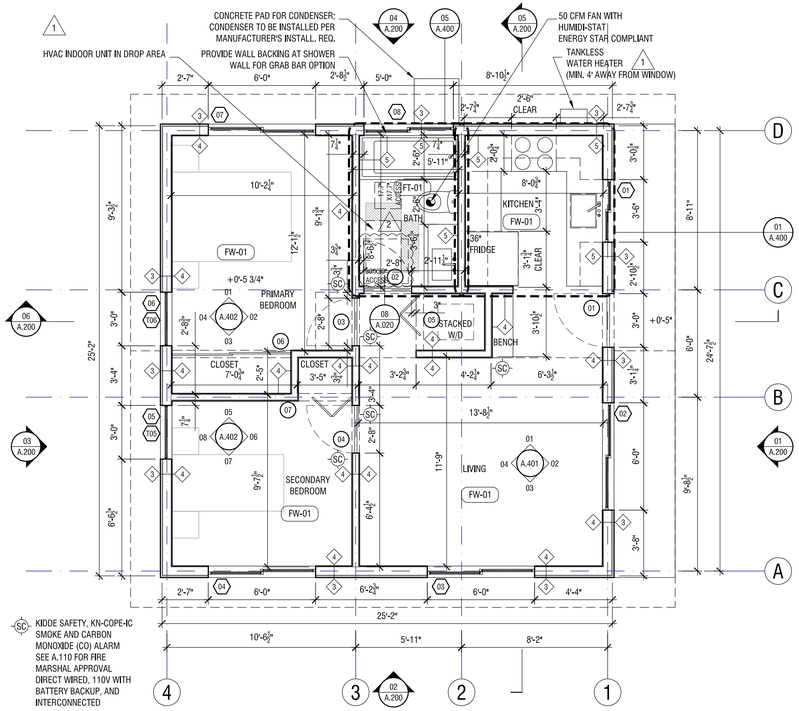

01 FLOOR PLAN
SCALE: 1/4"=1'-0"

FRESNO CONSTRUCTION NOT FOR PLAN CHECK 3 22-TADU-003
City of

ANX
AARON NEUBERT ARCHITECTS

ADU PROGRAM

OWNER:
CITY OF FRESNO
PLANNING AND DEVELOPMENT DEPARTMENT
2600 FRESNO STREET, 3RD FLOOR
FRESNO, CA 93721

ARCHITECT:
AARON NEUBERT ARCHITECTS, INC.
2814 ROWENA AVENUE, SUITE ONE
LOS ANGELES, CALIFORNIA 90039
P. 323.953.4700 F. 323.953.4900

AARON NEUBERT CA# C-29005

STRUCTURAL ENGINEER:
NOUS ENGINEERING, INC.
600 WILSHIRE BOULEVARD, SUITE 760
LOS ANGELES, CALIFORNIA 90017
P. 213.627.6687

MEP ENGINEER:
INNODEZ DESIGN AND ENGINEERING
726 FOXBROUGH PLACE
PLEASANTON, CALIFORNIA 94566
P. 424.414.0997

REVISION: DATE: COMMENT:

ISSUE:
2 REVISION #2 06.03.22 PLAN CHECK CORRECTIONS
1 REVISION #1 04.04.22 PLAN CHECK CORRECTIONS

SEAL:
LICENSED ARCHITECT JOSEPH A. NEUBERT C-29005 RENEWAL DATE 08.31.23 STATE OF CALIFORNIA

Project No. 2104
ADU PROGRAM
CITY OF FRESNO
CALIFORNIA

DRAWING TITLE:
ADU 03 - GABLE
FLOOR PLAN
WINDOW/DOOR SCHEDULE
633 SF

DATE: JUNE 3, 2022
SCALE: AS NOTED
DRAWN BY:

© Aaron Neubert Architects, INC. 2022

A.100g

Door landing requirements:
a)Width of door with 36" minimum. (CRC section R311.3)
b)No more than 1½"lower than the top of the threshold. (CRC section R311.3.1)
c)Not more than 7¾" below the top of the threshold provided that the door does not swing over the landing or floor. (CRC section R311.3.1)
d)Specify the egress door to be side hinged and shall provide a clear width of not less than 32" where measured between the face of the door and the stop, with the door opened 90 degrees. (CRC section 311.2)
e)Specify the minimum net height of the required egress door to be not less than 78" measured from the top of threshold to the bottom of the door stop. (CRC section 311.2)

DOOR SCHEDULE

UNIT	QTY.	TYPE	LOCATION	O.D. WIDTH	O.D. HEIGHT	U-FACTOR	SHGC	GLASS	FINISH	HINGES	MANUFACTURER #	COMMENTS	HARDWARE GROUP
01	1	FIBERGLASS DOOR WITH TEMP. LITE	ENTRY	36"	80"	-	-	-	-	SQ. STN. STL.	-	-	-
02	1	SOLID WOOD DOOR 1-3/4" FLUSH PANEL	BATH	32"	80"	-	-	-	-	SQ. STN. STL.	-	-	-
03	1	SOLID WOOD DOOR 1-3/4" FLUSH PANEL	BEDROOM	32"	80"	-	-	-	-	SQ. STN. STL.	-	-	-
05	1	SOLID WOOD DOOR FLUSH PANEL BIFOLD	W/D CLOSET	38"	80"	-	-	-	-	-	-	BIFOLD DOOR	-
06	1	SOLID WOOD DOOR 1-3/4" FLUSH PANEL	BEDROOM CLOSET	80"	80"	-	-	-	-	-	-	TWO PANEL SLIDING CLOSET	-
07	1	SOLID WOOD DOOR FLUSH PANEL BIFOLD	LIVING CLOSET	36"	80"	-	-	-	-	-	-	BIFOLD DOOR	-

NOTE:
ALL WINDOWS AND DOOR ARE VIEWED FROM EXTERIOR LOOKING AT THE WINDOWS AND DOORS

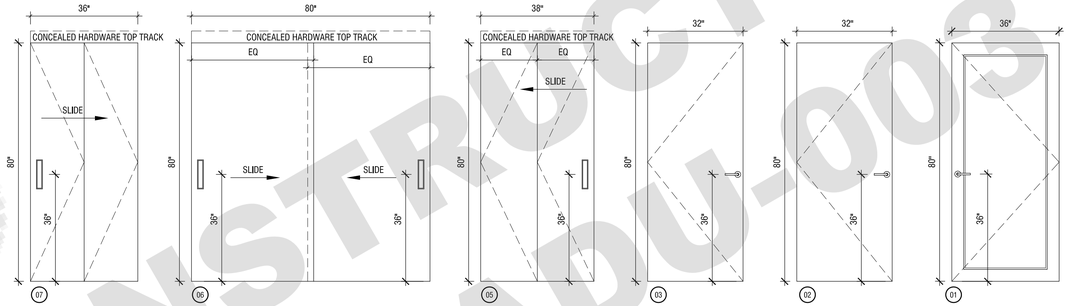

03 DOOR SCHEDULE
SCALE: 1/2" = 1'-0"

WINDOW SCHEDULE

UNIT	QTY.	TYPE	LOCATION	O.D. WIDTH	O.D. HEIGHT	R.O. WIDTH	R.O. HEIGHT	GLASS	U-FACTOR	SHGC	FINISH	SCREEN	MODEL #	COMMENTS
01	1	DBL SLIDER	KITCHEN	42"	38"	42 3/4"	38 3/4"				VINYL/WHITE	-		
02	1	DBL SLIDER	LIVING	72"	48"	72 3/4"	48 3/4"				VINYL/WHITE	-		
03	1	DBL SLIDER	LIVING	72"	48"	72 3/4"	48 3/4"				VINYL/WHITE	-		
04	1	DBL SLIDER	LIVING	72"	48"	72 3/4"	48 3/4"				VINYL/WHITE	-		
05	1	SNGL HUNG	LIVING	36"	48"	36 3/4"	48 3/4"				VINYL/WHITE	-		
105	1	FIXED	LIVING	36"	24"	36 3/4"	24 3/4"				VINYL/WHITE	-		
06	1	SNGL HUNG	BEDROOM	36"	48"	36 3/4"	48 3/4"				VINYL/WHITE	-		
106	1	FIXED	BEDROOM	36"	24"	36 3/4"	24 3/4"				VINYL/WHITE	-		
07	1	DBL SLIDER	BEDROOM	72"	48"	72 3/4"	48 3/4"				VINYL/WHITE	-		
08	1	DBL SLIDER	BATH	60"	20"	60 3/4"	20 3/4"				VINYL/WHITE	-		

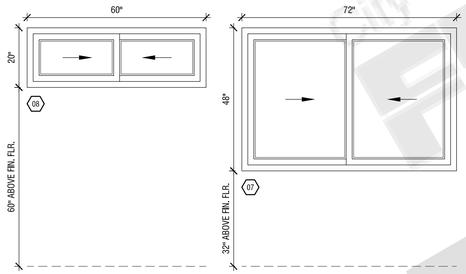

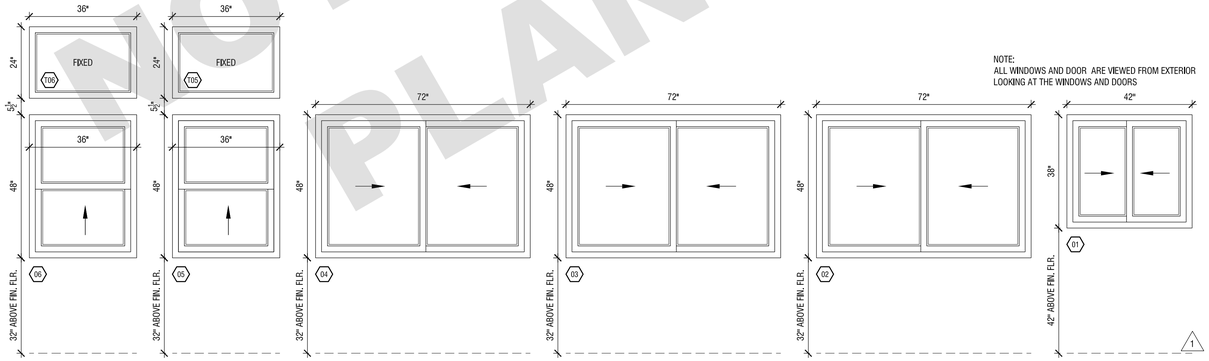

NOTE:
ALL WINDOWS AND DOOR ARE VIEWED FROM EXTERIOR LOOKING AT THE WINDOWS AND DOORS

02 WINDOW SCHEDULE
SCALE: 1/2" = 1'-0"

NOTE:
ALL GLASS TO BE CLEAR TEMPERED

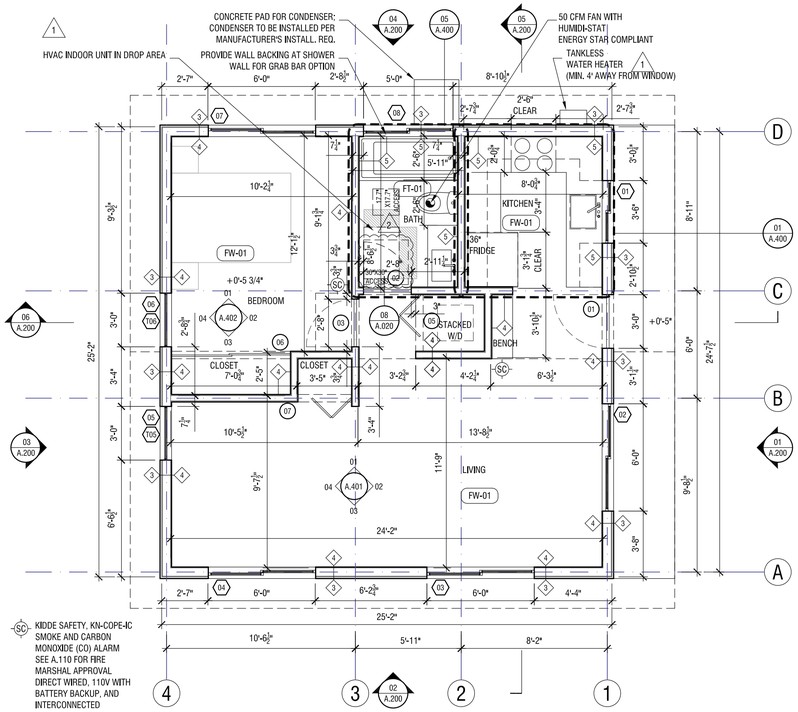

01 FLOOR PLAN
SCALE: 1/4" = 1'-0"

NOT FOR CONSTRUCTION
PLAN CHECK
ADU-003
22-1
City of FRESNO

ANX
AARON NEUBERT ARCHITECTS

ADU PROGRAM

OWNER:
CITY OF FRESNO
PLANNING AND DEVELOPMENT DEPARTMENT
2600 FRESNO STREET, 3RD FLOOR
FRESNO, CA 93721

ARCHITECT:
AARON NEUBERT ARCHITECTS, INC.
2814 ROWENA AVENUE, SUITE ONE
LOS ANGELES, CALIFORNIA 90039
P. 323.953.4700 F. 323.953.4900

AARON NEUBERT CA# C-29005

STRUCTURAL ENGINEER:
NOUS ENGINEERING, INC.
600 WILSHIRE BOULEVARD, SUITE 760
LOS ANGELES, CALIFORNIA 90017
P. 213.627.6687

MEP ENGINEER:
INNODEZ DESIGN AND ENGINEERING
726 FOXBROUGH PLACE
PLEASANTON, CALIFORNIA 94566
P. 424.414.0997

REVISION: DATE: COMMENT:

ISSUE:
2 REVISION #2 06.03.22 PLAN CHECK CORRECTIONS
1 REVISION #1 04.04.22 PLAN CHECK CORRECTIONS

SEAL:
LICENSED ARCHITECT
DENNIS W. LEE
C-29005
06.30.23
RENEWAL DATE
STATE OF CALIFORNIA

Project No. 2104
ADU PROGRAM
CITY OF FRESNO
CALIFORNIA

DRAWING TITLE:
ADU 03 ALT - GABLE
FLOOR PLAN
WINDOW/DOOR SCHEDULE
633 SF

DATE: JUNE 3, 2022
SCALE: AS NOTED
DRAWN BY:

A.100g_alt

© Aaron Neubert Architects, Inc. 2022

Door landing requirements:
a)Width of door with 36" minimum. (CRC section R311.3)
b)No more than 1½"lower than the top of the threshold. (CRC section R311.3.1)
c)Not more than 7¾" below the top of the threshold provided that the door does not swing over the landing or floor. (CRC section R311.3.1)
d)Specify the egress door to be side hinged and shall provide a clear width of not less than 32" where measured between the face of the door and the stop, with the door opened 90 degrees. (CRC section 311.2)
e)Specify the minimum net height of the required egress door to be not less than 78" measured from the top of threshold to the bottom of the door stop. (CRC section 311.2)

DOOR SCHEDULE

UNIT	QTY.	TYPE	LOCATION	O.D. WIDTH	O.D. HEIGHT	U-FACTOR	SHGC	GLASS	FINISH	HINGES	MANUFACTURER #	COMMENTS	HARDWARE GROUP
01	1	FIBERGLASS DOOR WITH TEMP. LITE	ENTRY	36"	80"	-	-	-	-	SQ. STN. STL.	-	-	-
02	1	SOLID WOOD DOOR 1-3/4" FLUSH PANEL	BATH	32"	80"	-	-	-	-	SQ. STN. STL.	-	-	-
03	1	SOLID WOOD DOOR 1-3/4" FLUSH PANEL	PRIMARY BEDROOM	32"	80"	-	-	-	-	SQ. STN. STL.	-	-	-
04	1	SOLID WOOD DOOR 1-3/4" FLUSH PANEL	SECONDARY BEDROOM	32"	80"	-	-	-	-	SQ. STN. STL.	-	-	-
05	1	SOLID WOOD DOOR FLUSH PANEL BIFOLD	W/D CLOSET	38"	80"	-	-	-	-	-	-	BIFOLD DOOR	-
06	1	SOLID WOOD DOOR 1-3/4" FLUSH PANEL	PRIMARY BEDROOM CLOSET	80"	80"	-	-	-	-	-	-	TWO PANEL SLIDING CLOSET	-
07	1	SOLID WOOD DOOR FLUSH PANEL BIFOLD	SECONDARY BEDROOM CLOSET	36"	80"	-	-	-	-	-	-	BIFOLD DOOR	-

NOTE:
ALL WINDOWS AND DOOR ARE VIEWED FROM EXTERIOR LOOKING AT THE WINDOWS AND DOORS

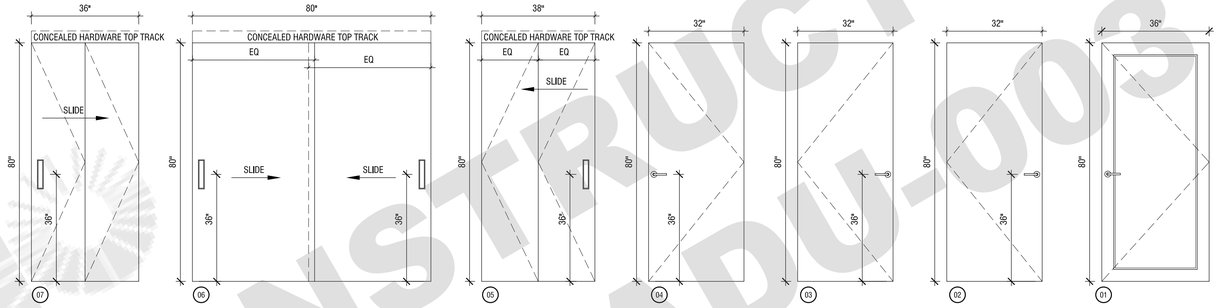

03 DOOR SCHEDULE
SCALE: 1/2" = 1'-0"

WINDOW SCHEDULE

UNIT	QTY.	TYPE	LOCATION	O.D. WIDTH	O.D. HEIGHT	R.O. WIDTH	R.O. HEIGHT	GLASS	U-FACTOR	SHGC	FINISH	SCREEN	MODEL #	COMMENTS
01	1	DBL SLIDER	KITCHEN	42"	38"	42 3/4"	38 3/4"				VINYL/WHITE	YES		
02	1	DBL SLIDER	LIVING	72"	48"	72 3/4"	48 3/4"				VINYL/WHITE	YES		
03	1	DBL SLIDER	LIVING	72"	48"	72 3/4"	48 3/4"				VINYL/WHITE	YES		
103	1	FIXED	LIVING	72"	24"	72 3/4"	24 3/4"				VINYL/WHITE	-		
04	1	DBL SLIDER	SECONDARY BEDROOM	72"	48"	72 3/4"	48 3/4"				VINYL/WHITE	YES		
104	1	FIXED	SECONDARY BEDROOM	72"	24"	72 3/4"	24 3/4"				VINYL/WHITE	-		
05	1	SNGL HUNG	SECONDARY BEDROOM	36"	48"	36 3/4"	48 3/4"				VINYL/WHITE	YES		
06	1	SNGL HUNG	PRIMARY BEDROOM	36"	48"	36 3/4"	48 3/4"				VINYL/WHITE	YES		
07	1	DBL SLIDER	PRIMARY BEDROOM	72"	48"	72 3/4"	48 3/4"				VINYL/WHITE	YES		
08	1	DBL SLIDER	BATH	60"	20"	60 3/4"	20 3/4"				VINYL/WHITE	YES		

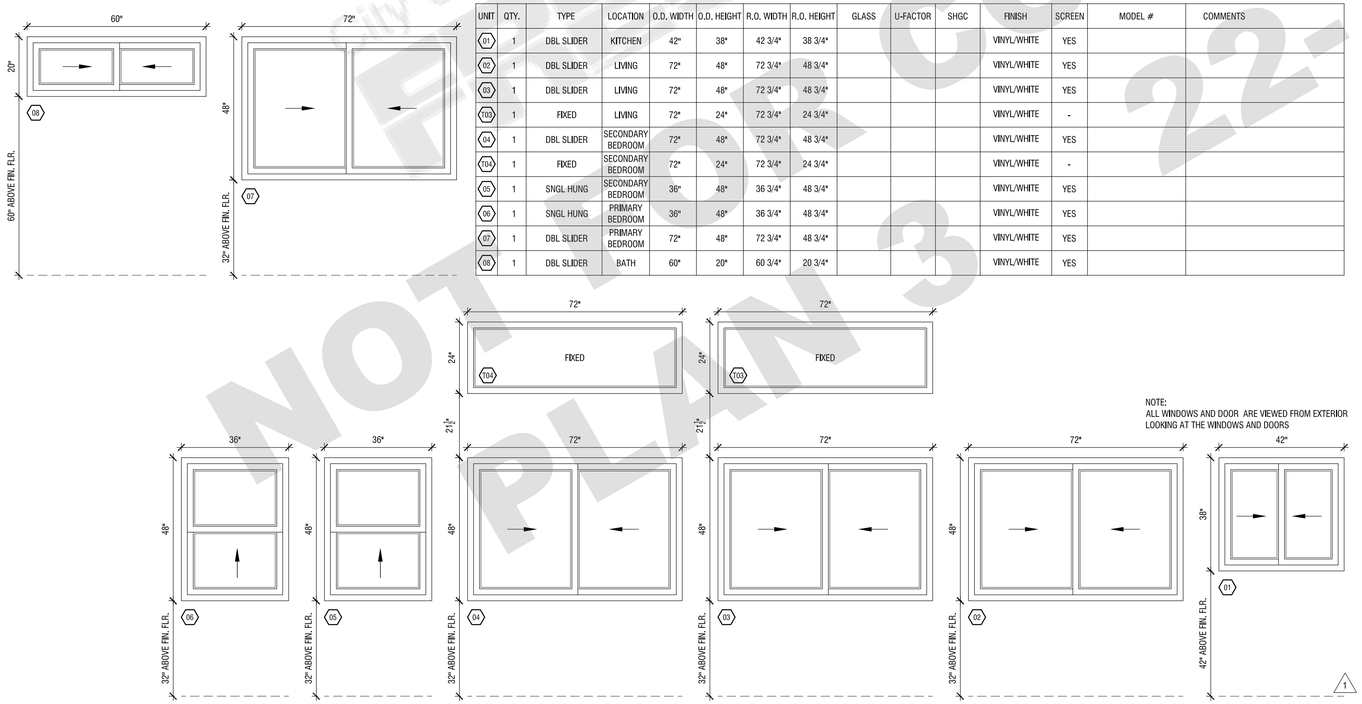

NOTE:
ALL GLASS TO BE CLEAR TEMPERED

NOTE:
ALL WINDOWS AND DOOR ARE VIEWED FROM EXTERIOR LOOKING AT THE WINDOWS AND DOORS

02 WINDOW SCHEDULE
SCALE: 1/2" = 1'-0"

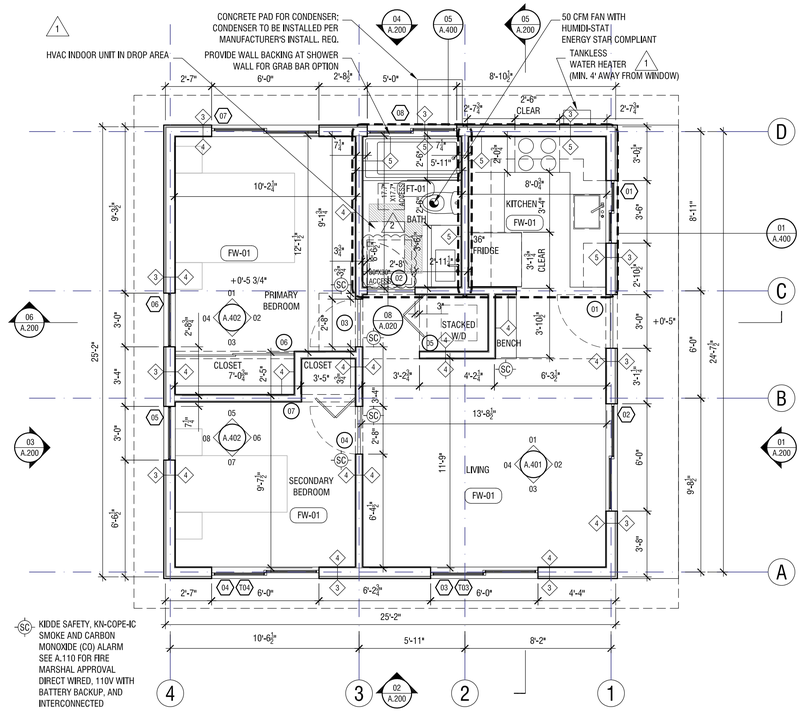

01 FLOOR PLAN
SCALE: 1/4" = 1'-0"

CITY OF FRESNO
Review of Construction Plan
Not for Construction
PLAN 3 22-ADU-003

ANX
AARON NEUBERT ARCHITECTS

ADU PROGRAM

OWNER:
CITY OF FRESNO
PLANNING AND DEVELOPMENT DEPARTMENT
2600 FRESNO STREET, 3RD FLOOR
FRESNO, CA 93721

ARCHITECT:
AARON NEUBERT ARCHITECTS, INC.
2814 ROWENA AVENUE, SUITE ONE
LOS ANGELES, CALIFORNIA 90039
P. 323.953.4700 F. 323.953.4900

AARON NEUBERT C#: C-29005

STRUCTURAL ENGINEER:
NOUS ENGINEERING, INC.
600 WILSHIRE BOULEVARD, SUITE 760
LOS ANGELES, CALIFORNIA 90017
P. 213.627.6687

MEP ENGINEER:
INNODEZ DESIGN AND ENGINEERING
726 FOXBOROUGH PLACE
PLEASANTON, CALIFORNIA 94566
P. 424.414.0997

REVISION: DATE: COMMENT:

ISSUE:
2 REVISION #2 06.03.22 PLAN CHECK CORRECTIONS
1 REVISION #1 04.04.22 PLAN CHECK CORRECTIONS

SEAL:
LICENSED ARCHITECT
GREGORY W. NEUBERT
C-29005
06.30.23
RENEWAL DATE
STATE OF CALIFORNIA

Project No. 2104
ADU PROGRAM
CITY OF FRESNO
CALIFORNIA

DRAWING TITLE:
ADU 03 - CONTEMPORARY
FLOOR PLAN
WINDOW/DOOR SCHEDULE
633 SF

DATE: JUNE 3, 2022
SCALE: AS NOTED
DRAWN BY:

© Aaron Neubert Architects, INC. 2022

A.100s

Door landing requirements:
a)Width of door with 36" minimum. (CRC section R311.3)
b)No more than 1½"lower than the top of the threshold. (CRC section R311.3.1)
c)Not more than 7¾" below the top of the threshold provided that the door does not swing over the landing or floor. (CRC section R311.3.1)
d)Specify the egress door to be side hinged and shall provide a clear width of not less than 32" where measured between the face of the door and the stop, with the door opened 90 degrees. (CRC section 311.2)
e)Specify the minimum net height of the required egress door to be not less than 78" measured from the top of threshold to the bottom of the door stop. (CRC section 311.2)

DOOR SCHEDULE

UNIT	QTY.	TYPE	LOCATION	O.D. WIDTH	O.D. HEIGHT	U-FACTOR	SHGC	GLASS	FINISH	HINGES	MANUFACTURER #	COMMENTS	HARDWARE GROUP
01	1	FIBERGLASS DOOR WITH TEMP. LITE	ENTRY	36"	80"	-	-	-	-	SQ. STN. STL.	-	-	-
02	1	SOLID WOOD DOOR 1-3/4" FLUSH PANEL	BATH	32"	80"	-	-	-	-	SQ. STN. STL.	-	-	-
03	1	SOLID WOOD DOOR 1-3/4" FLUSH PANEL	BEDROOM	32"	80"	-	-	-	-	SQ. STN. STL.	-	-	-
05	1	SOLID WOOD DOOR FLUSH PANEL BIFOLD	W/D CLOSET	38"	80"	-	-	-	-	-	-	BIFOLD DOOR	-
06	1	SOLID WOOD DOOR 1-3/4" FLUSH PANEL	BEDROOM CLOSET	80"	80"	-	-	-	-	-	-	TWO PANEL SLIDING CLOSET	-
07	1	SOLID WOOD DOOR FLUSH PANEL BIFOLD	LIVING CLOSET	36"	80"	-	-	-	-	-	-	BIFOLD DOOR	-

NOTE:
ALL WINDOWS AND DOOR ARE VIEWED FROM EXTERIOR LOOKING AT THE WINDOWS AND DOORS

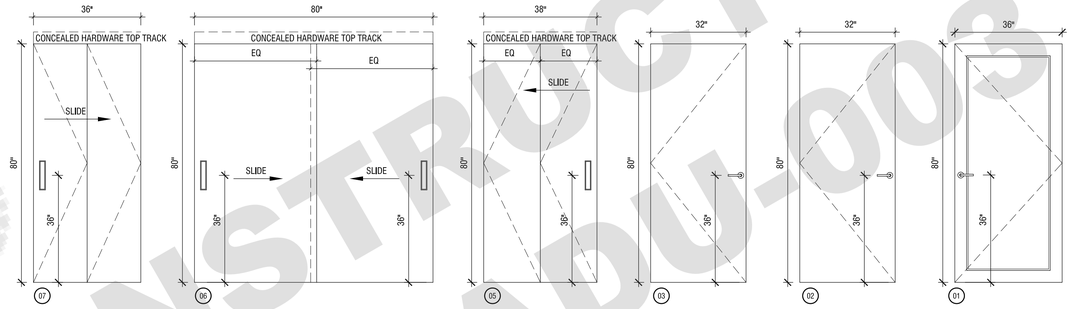

03 DOOR SCHEDULE
SCALE: 1/2" = 1'-0"

WINDOW SCHEDULE

UNIT	QTY.	TYPE	LOCATION	O.D. WIDTH	O.D. HEIGHT	R.O. WIDTH	R.O. HEIGHT	GLASS	U-FACTOR	SHGC	FINISH	SCREEN	MODEL #	COMMENTS
01	1	DBL SLIDER	KITCHEN	42"	38"	42 3/4"	38 3/4"				VINYL/WHITE	-		
02	1	DBL SLIDER	LIVING	72"	48"	72 3/4"	48 3/4"				VINYL/WHITE	-		
03	1	DBL SLIDER	LIVING	72"	48"	72 3/4"	48 3/4"				VINYL/WHITE	-		
103	1	FIXED	LIVING	72"	24"	72 3/4"	24 3/4"				VINYL/WHITE	-		
04	1	DBL SLIDER	LIVING	72"	48"	72 3/4"	48 3/4"				VINYL/WHITE	-		
104	1	FIXED	LIVING	72"	24"	72 3/4"	24 3/4"				VINYL/WHITE	-		
05	1	SNGL HUNG	LIVING	36"	48"	36 3/4"	48 3/4"				VINYL/WHITE	-		
06	1	SNGL HUNG	BEDROOM	36"	48"	36 3/4"	48 3/4"				VINYL/WHITE	-		
07	1	DBL SLIDER	BEDROOM	72"	48"	72 3/4"	48 3/4"				VINYL/WHITE	-		
08	1	DBL SLIDER	BATH	60"	20"	60 3/4"	20 3/4"				VINYL/WHITE	-		

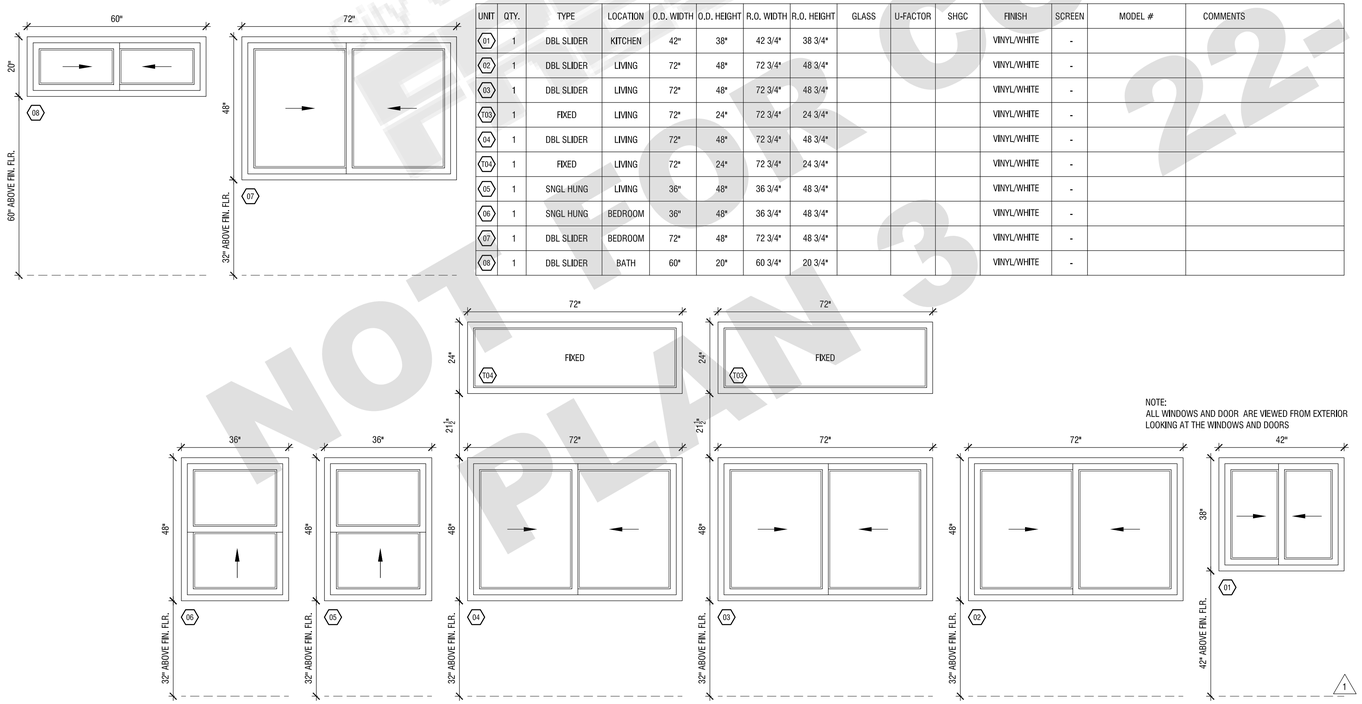

NOTE:
ALL WINDOWS AND DOOR ARE VIEWED FROM EXTERIOR LOOKING AT THE WINDOWS AND DOORS

02 WINDOW SCHEDULE
SCALE: 1/2" = 1'-0"

NOTE:
ALL GLASS TO BE CLEAR TEMPERED

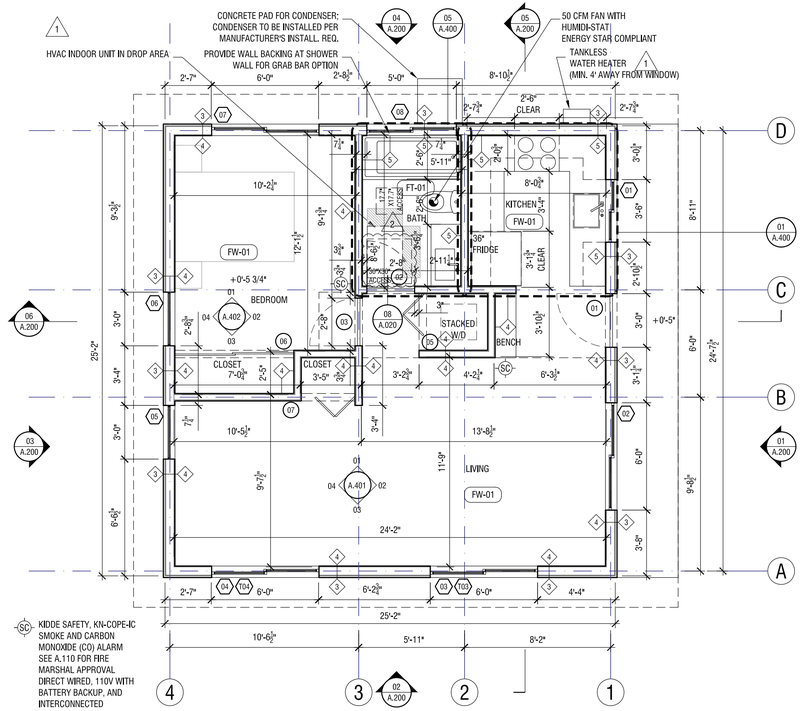

01 FLOOR PLAN
SCALE: 1/4" = 1'-0"

ANX
AARON NEUBERT ARCHITECTS

ADU PROGRAM

OWNER:
CITY OF FRESNO
PLANNING AND DEVELOPMENT DEPARTMENT
2600 FRESNO STREET, 3RD FLOOR
FRESNO, CA 93721

ARCHITECT:
AARON NEUBERT ARCHITECTS, INC.
2814 ROWENA AVENUE, SUITE ONE
LOS ANGELES, CALIFORNIA 90039
P. 323.953.4700 F. 323.953.4900

AARON NEUBERT CA# C-29005

STRUCTURAL ENGINEER:
NOUS ENGINEERING, INC.
600 WILSHIRE BOULEVARD, SUITE 760
LOS ANGELES, CALIFORNIA 90017
P. 213.627.6687

MEP ENGINEER:
INNODEZ DESIGN AND ENGINEERING
726 FOXBROUGH PLACE
PLEASANTON, CALIFORNIA 94566
P. 424.414.0997

REVISION: DATE: COMMENT:

ISSUE:
2 REVISION #2 06.03.22 PLAN CHECK CORRECTIONS
1 REVISION #1 04.04.22 PLAN CHECK CORRECTIONS

SEAL:
LICENSED ARCHITECT — GEORGE W. NEUBERT — C-29005 — 08.31.23 RENEWAL DATE — STATE OF CALIFORNIA

Project No. 2104
ADU PROGRAM
CITY OF FRESNO
CALIFORNIA

DRAWING TITLE:
ADU 03 ALT - CONTEMPORARY
FLOOR PLAN
WINDOW/DOOR SCHEDULE
633 SF

DATE: JUNE 3, 2022
SCALE: AS NOTED
DRAWN BY:

A.100s_alt

© Aaron Neubert Architects, Inc. 2022

NOT FOR CONSTRUCTION
PLAN 3 22-ADU-005
City of FRESNO

City of FRESNO
NOT FOR CONSTRUCTION
PLAN 3
22-TADU-003

ENCLOSED RAFTER SPACE VENT:
1,033 SF ROOF AREA
1,033 SF/ 150 = 6.9 SF REQUIRED
= 994 SQIN

2

AIR VENT INC. EV16624
UNDEREAVE VENT, 56 NFA
(9) IN TOTAL

MASTER FLOW RT65
ROOF LOUVER, 60 NFA
(9) IN TOTAL

MIN. 1" AIR SPACE BETWEEN INSULATION AND ROOF SHEATHING.
WHERE EAVE OR CORNICE VENTS ARE INSTALLED, SPECIFY 4'
LONG BAFFLES MINIMUM. (CRC section R806.3)

2

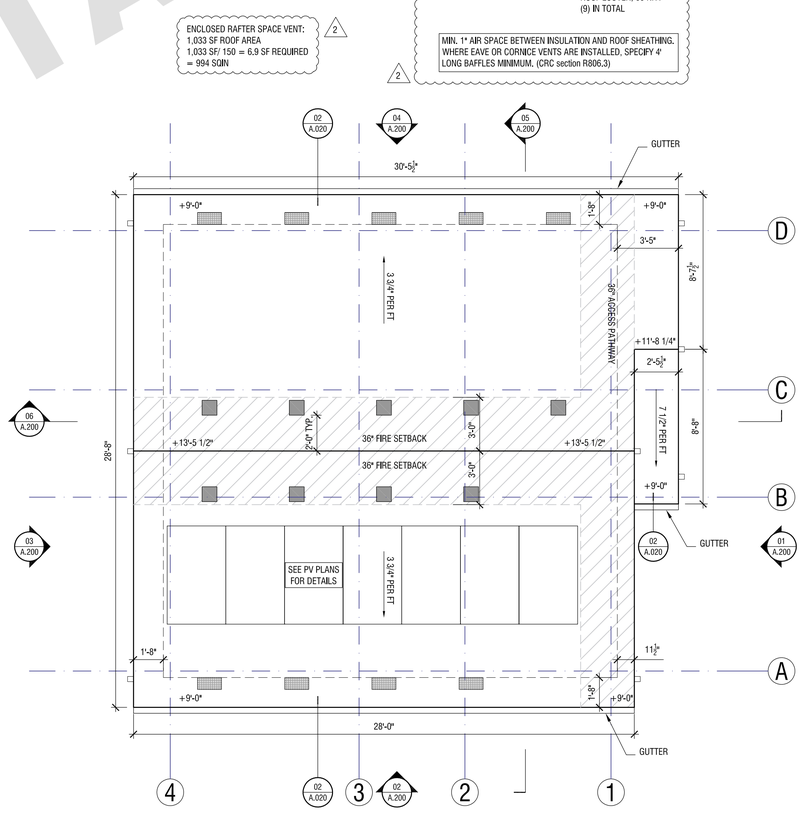

01 ROOF PLAN
SCALE: 1/4"=1'-0"

ANX

AARON NEUBERT ARCHITECTS

ADU PROGRAM

OWNER:

CITY OF FRESNO
PLANNING AND DEVELOPMENT DEPARTMENT
2600 FRESNO STREET, 3RD FLOOR
FRESNO, CA 93721

ARCHITECT:

AARON NEUBERT ARCHITECTS, INC.
2814 ROWENA AVENUE, SUITE ONE
LOS ANGELES, CALIFORNIA 90039
P. 323.953.4700 F. 323.953.4900

AARON NEUBERT CA# C-29005

STRUCTURAL ENGINEER:

NOUS ENGINEERING, INC.
600 WILSHIRE BOULEVARD, SUITE 760
LOS ANGELES, CALIFORNIA 90017
P. 213.627.6687

MEP ENGINEER:

INNODEZ DESIGN AND ENGINEERING
726 FOXBOROUGH PLACE
PLEASANTON, CALIFORNIA 94566
P. 424.414.0997

REVISION:	DATE:	COMMENT:
ISSUE:		
2 REVISION #2	06.03.22	PLAN CHECK CORRECTIONS
1 REVISION #1	04.04.22	PLAN CHECK CORRECTIONS

SEAL:

LICENSED ARCHITECT
AARON NEUBERT
C-29005
RENEWAL DATE 08.31.23
STATE OF CALIFORNIA

Project No. 2104

ADU PROGRAM
CITY OF FRESNO
CALIFORNIA

DRAWING TITLE:

ADU 03 - CRAFTSMAN
ROOF PLAN

DATE: JUNE 3, 2022
SCALE: 1/4=1'-0"
DRAWN BY:

© Aaron Neubert Architects, INC. 2022

A.101c

City of FRESNO
NOT FOR CONSTRUCTION
PLAN 3
22-TADU-003

ENCLOSED RAFTER SPACE VENT:
1,058 SF ROOF AREA
1,058 SF/ 150 = 7.1 SF REQUIRED
= 1,023 SQIN

△2

AIR VENT INC. EV16624
UNDEREAVE VENT, 56 NFA
(9) IN TOTAL

MASTER FLOW RT65
ROOF LOUVER, 60 NFA
(9) IN TOTAL

MIN. 1" AIR SPACE BETWEEN INSULATION AND ROOF SHEATHING.
WHERE EAVE OR CORNICE VENTS ARE INSTALLED, SPECIFY 4'
LONG BAFFLES MINIMUM. (CRC section R806.3)

△2

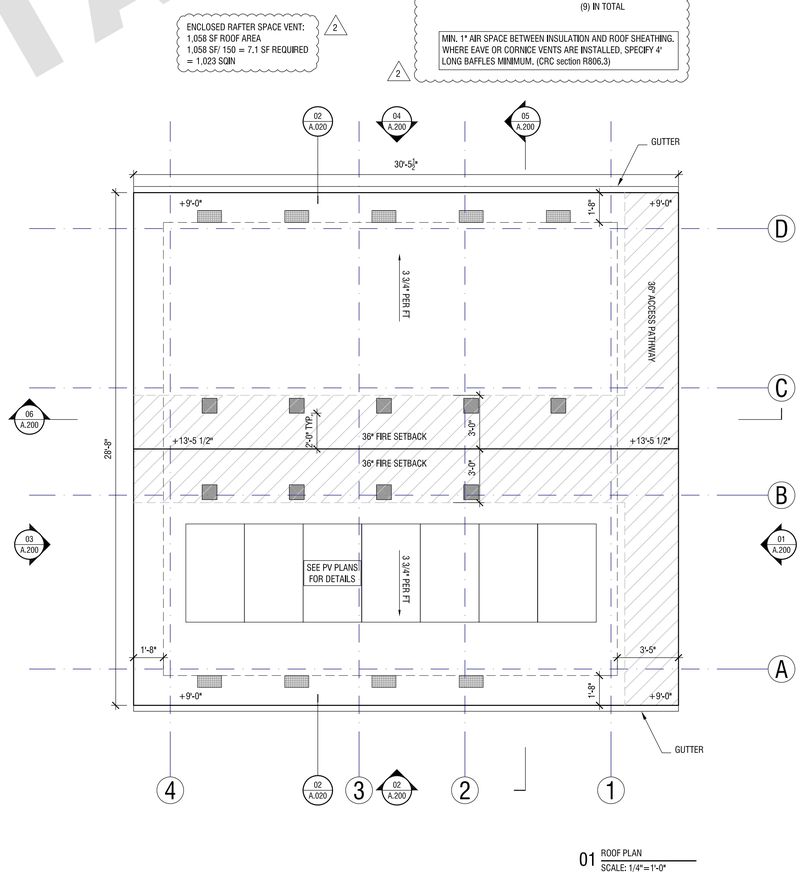

01 ROOF PLAN
SCALE: 1/4"=1'-0"

ANX

AARON NEUBERT ARCHITECTS

ADU PROGRAM

OWNER:

CITY OF FRESNO
PLANNING AND DEVELOPMENT DEPARTMENT
2600 FRESNO STREET, 3RD FLOOR
FRESNO, CA 93721

ARCHITECT:

AARON NEUBERT ARCHITECTS, INC.
2814 ROWENA AVENUE, SUITE ONE
LOS ANGELES, CALIFORNIA 90039
P. 323.953.4700 F. 323.953.4900

AARON NEUBERT CA# C-29005

STRUCTURAL ENGINEER:

NOUS ENGINEERING, INC.
600 WILSHIRE BOULEVARD, SUITE 760
LOS ANGELES, CALIFORNIA 90017
P. 213.627.6687

MEP ENGINEER:

INNODEZ DESIGN AND ENGINEERING
726 FOXBOROUGH PLACE
PLEASANTON, CALIFORNIA 94566
P. 424.414.0997

REVISION:	DATE:	COMMENT:
ISSUE:		
△2 REVISION #2 06.03.22		PLAN CHECK CORRECTIONS
△1 REVISION #1 04.04.22		PLAN CHECK CORRECTIONS

SEAL:



Project No. 2104

ADU PROGRAM
CITY OF FRESNO
CALIFORNIA

DRAWING TITLE:

ADU 03 - GABLE
ROOF PLAN

DATE: JUNE 3, 2022
SCALE: 1/4=1'-0"
DRAWN BY:

© Aaron Neubert Architects, INC. 2022

A.101g

City of FRESNO
NOT FOR CONSTRUCTION
PLAN 3
22-TADU-003

ENCLOSED RAFTER SPACE VENT:
1020 SF ROOF AREA
750 SF/ 150 = 6.8 SF REQUIRED
= 980 SQIN

2

AIR VENT INC. EV16624
UNDEREAVE VENT, 56 NFA
(8) IN TOTAL

MASTER FLOW RT65
ROOF LOUVER, 60 NFA
(9) IN TOTAL

MIN. 1" AIR SPACE BETWEEN INSULATION AND ROOF SHEATHING.
WHERE EAVE OR CORNICE VENTS ARE INSTALLED, SPECIFY 4'
LONG BAFFLES MINIMUM. (CRC section R806.3)

2

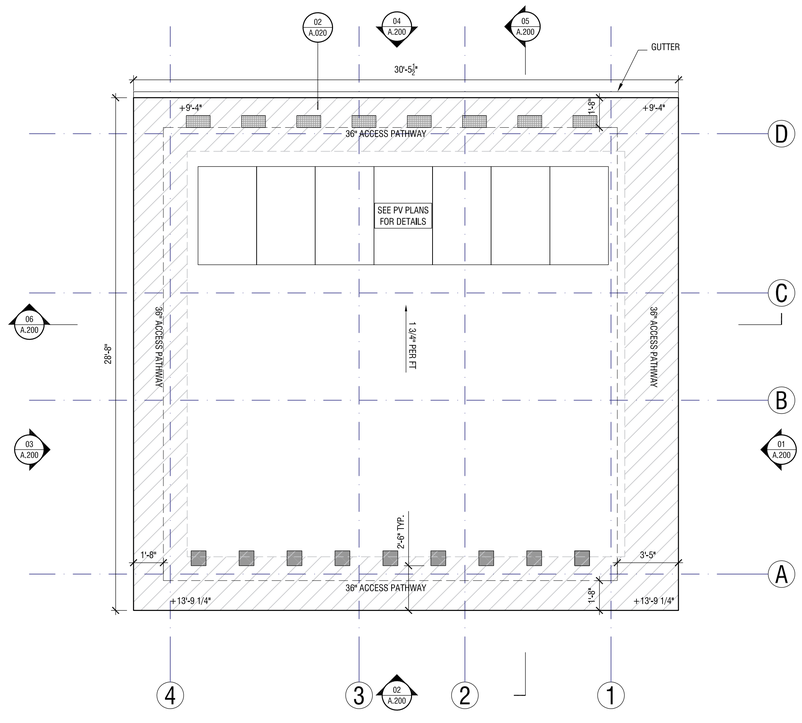

01 ROOF PLAN
SCALE: 1/4"=1'-0"

ANX

AARON NEUBERT ARCHITECTS

ADU PROGRAM

OWNER:

CITY OF FRESNO
PLANNING AND DEVELOPMENT DEPARTMENT
2600 FRESNO STREET, 3RD FLOOR
FRESNO, CA 93721

ARCHITECT:

AARON NEUBERT ARCHITECTS, INC.
2814 ROWENA AVENUE, SUITE ONE
LOS ANGELES, CALIFORNIA 90039
P. 323.953.4700 F. 323.953.4900

AARON NEUBERT C#: C-29005

STRUCTURAL ENGINEER:

NOUS ENGINEERING, INC.
600 WILSHIRE BOULEVARD, SUITE 760
LOS ANGELES, CALIFORNIA 90017
P. 213.627.6687

MEP ENGINEER:

INNODEZ DESIGN AND ENGINEERING
726 FOXBOROUGH PLACE
PLEASANTON, CALIFORNIA 94566
P. 424.414.0997

REVISION: DATE: COMMENT:

ISSUE:

2 REVISION #2 06.03.22 PLAN CHECK CORRECTIONS
1 REVISION #1 04.04.22 PLAN CHECK CORRECTIONS

SEAL:

LICENSED ARCHITECT
AARON NEUBERT
C-29005
05.31.23
RENEWAL DATE
STATE OF CALIFORNIA

Project No. 2104

ADU PROGRAM
CITY OF FRESNO
CALIFORNIA

DRAWING TITLE:

ADU 03 - CONTEMPORARY
ROOF PLAN

DATE: JUNE 3, 2022
SCALE: 1/4=1'-0"
DRAWN BY:

© Aaron Neubert Architects, INC. 2022

A.101s

CALIFORNIA DEPARTMENT OF FORESTRY & FIRE PROTECTION
OFFICE OF THE STATE FIRE MARSHAL
FIRE ENGINEERING - BUILDING MATERIALS LISTING PROGRAM

LISTING SERVICE

LISTING No. 7263-1610:0142 Page 1 of 1

CATEGORY: 7263 -- SMOKE ALARM-COMBINATION SMOKE/CARBON MONOXIDE (PHOTOELECTRIC)

LISTEE: KIDDE SAFETY4820 Centennial Blvd, Suite 145, Colorado Springs, CO 80919
Contact: Larry Ratzlaff (847) 214-1190
Email: larry.ratzlaff@carrier.com

DESIGN: *Model KN-COPE-IC is a 120 VAC powered with a 9 volt backup photoelectric type smoke and electrochemical carbon monoxide (CO) alarm. *Unit is equipped with alarm silence feature and have a 10 year end of life timer. Refer to listee's data sheet for detailed product description and operational considerations.

RATING: Model KN-COPE-IC: 120 VAC with 9 volt backup
Approved batteries: Duracell MN1604 or MX1604, Energizer 522 or Gold Peak 1604A

INSTALLATION: In accordance with listee's printed installation instructions, applicable codes and ordinances and in a manner acceptable to the authority having jurisdiction.

MARKING: Listee's name, model number, electrical rating, and UL label.

APPROVAL: Listed as a single/multiple station photoelectric smoke and electrochemical carbon monoxide (CO) alarm.

NOTE:
1. The photoelectric type alarms are generally more effective at detecting slow, smoldering fires which smolder for hours before bursting into flame. Sources of these fires may include cigarettes burning in couches or bedding. The ionization type alarms are generally more effective at detecting fast, flaming fires which consume combustible materials rapidly and spread quickly. Sources of these fires may include paper burning in a waste container or a grease fire in the kitchen.

2. *Meet the new smoke alarm requirement (SB1394).

3. *Formerly 7257-1610:0142

*Rev. 06-10-15 bh

This listing is based upon technical data submitted by the applicant. CSFM Fire Engineering staff has reviewed the test results and/or other data but does not make an independent verification of any claims. This listing is not an endorsement or recommendation of the item listed. This listing should not be used to verify correct operational requirements or installation criteria. Refer to listee's data sheet, installation instructions and/or other

Date Issued: **July 01, 2021** *Listing Expires* **June 30, 2022**

Authorized By: ***DAVID CASTILLO,*** *M.E., F.P.E.*
Fire Engineering Division

03 SMOKE/ CARBON MONOXIDE ALARM SPECIFICATION
SCALE: N/A

FRESNO ADU

GENERAL NOTES:
1. Luminaires shall have appropriate UL or other label as required by local codes.
2. Luminaires shall include accessories for installation according to local and national codes.
3. Contractor shall verify the following prior to ordering luminaires:
   a. locations and recess depths and any structural and other conflicts.
   b. final voltages and ceiling trim compatibility.
   c. ceilings more than ¾/3/4" thick which limits trim compatibility.
   d. luminaires in insulated ceilings, necessitating the need for insulated ceiling type housings.
4. Contractor shall provide approved fire-rated enclosures for luminaires located in a fire-rated ceiling.
5. Responsibility for emergency lighting, code compliance, and circuiting to meet code conformance remains with the Architect and Electrical Engineer as required by law.
6. Contractor shall submit luminaire substitutions prior to bid for review. Contractor shall supply a sample and/or photometric data if requested. If substitution is rejected, Contractor shall provide specified product.
7. Luminaire voltages to be determined by Project Electrical Engineer.
8. All luminaire sockets shall be labeled permanently, in the factory, with wattages indicated in "Lamp Specification" column, not maximum wattages.

TYPE	DESCRIPTION	LUMINAIRE SPECIFICATION	LAMP SPECIFICATION	INPUT WATTS	LUMINAIRE NOTES	LOCATION	REV. NO.
F1	Downlight Interior	ELCO EL490ICA housing Koto Module with Pex 4" Adjustable Phenolic Baffle	2700K 120V	14 W	White Trim	Typ. Interior	
F2	Surface mounted luminaire for sink/ vanity Damp Location	DWELED Slim Nightstick LED Wall Light WS-35819	1276 lm 3000K 120V	17 W		Bathroom	
F3	Under cabinet mounted led luminaire	Commercial Electric 16 ft. White Indoor LED Tape Light with remote 1004 105 594	180 lm/ft 3000K Dimmable 12V	4.7 W/ft		Under Cabinet	
F4	Ceiling mounted fan w/ light fixture	Home Decorators Collection Mercer 52in. LED Indoor Brushed Nickel Ceiling Fan with Light Kit and Remote	120V	14 W		Bedroom	
F5	Surface mounted luminaire for entryway Exterior	Artika Glacier 1-Light LED Wall Sconce	650 lm 3000K Dimmable 120V	9.3 W		Exterior Entry	

1

02 LIGHTING SCHEDULE
SCALE: 1/2"=1'0"

1 Provide receptacle within 25' and on the same level of mechanical equipment. (CEC section 210.63)

NOTE: Receptacles serving countertops and Work Surfaces:
a) Receptacle outlets shall not be installed in a face up position in the work surfaces.
b) Receptacle outlets shall be located on or above, but not more than 20in. above the countertop or work surface. (CEC section 210.52(C)(5))
c) Receptacle outlets shall be permitted to be mounted not more than 12in. below the countertop or work surface provided the countertop does not extend more than 6 in. beyond its support base. (CEC section 210.52(C)(5) Exception)
d) On island and peninsular countertops, receptacles may be mounted a maximum 12in. below countertop provided there are no back splashes or dividers and no means to mount within 20in. above countertop, such as an overhead cabinet. (CEC section 210.52(C)(5) Exception(2))

NOTE: EXTERIOR ELECTRICAL RECEPTACLE TO BE INSTALLED AT 1'-6" A.F.F. TYPICAL

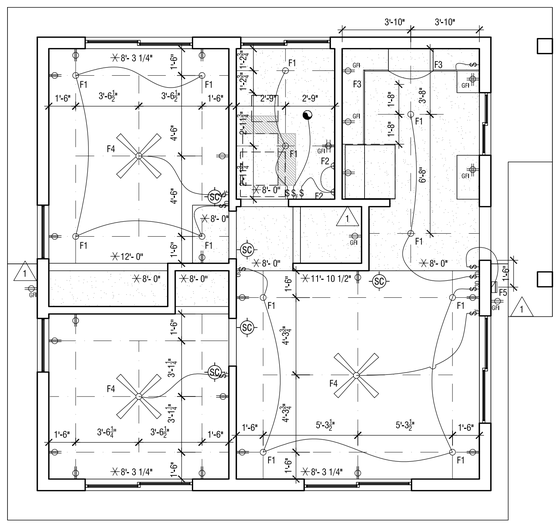

01 REFLECTED CEILING PLAN
SCALE: 1/4"=1'-0"

- CEILING FAN / LIGHT
- KIDDE SAFETY, KN-COPE-IC SMOKE AND CARBON MONOXIDE (CO) ALARM
- TELEVISION CABLE
- DATA LINE
- THERMOSTAT
- VERT. DUCT
- DUCT
- UNDERGROUND DUCT
- AIR SUPPLY
- RETURN
- AIR SUPPLY
- RETURN
- TELEPHONE
- TELEPHONE (2 LINE)
- OUTLET
- QUAD OUTLET
- DEDICATED OUTLET
- FLOOR-MOUNTED OUTLET
- SWITCH
- DIMMER SWITCH
- 3-WAY SWITCH
- 3-WAY DIMMER SWITCH
- EXHAUST FAN SWITCH
- RADIANT FLOOR HEATER CONTROL
- LED DOWN LIGHT
- LED DIRECTIONAL DOWN LIGHT
- WALL SCONCE
- PENDANT LIGHT
- LINEAR CABINET UNDERMOUNT LIGHT
- EXTERIOR LIGHT
- EXTERIOR MOTION SENSITIVE LIGHT
- FLUSH MOUNTED CEILING SPEAKER
- EXHAUST FAN
- DAYLIGHT SENSOR

NOTE: ALL SWITCHES & OUTLETS TO HAVE SCREWLESS FACEPLATES

NOTE: EXTERIOR ELECTRICAL RECEPTACLE TO HAVE WEATHERPROOF COVER

- DROP CEILING
- VAULTED CEILING

CITY OF FRESNO
CONSTRUCTION
FOR PERMIT
ADU-003
PLAN CHECK
2022

ANX

AARON NEUBERT ARCHITECTS

ADU PROGRAM

OWNER:
CITY OF FRESNO
PLANNING AND DEVELOPMENT DEPARTMENT
2600 FRESNO STREET, 3RD FLOOR
FRESNO, CA 93721

ARCHITECT:
AARON NEUBERT ARCHITECTS, INC.
2814 ROWENA AVENUE, SUITE ONE
LOS ANGELES, CALIFORNIA 90039
P. 323.953.4700 F. 323.953.4900
AARON NEUBERT CA# C-29005

STRUCTURAL ENGINEER:
NOUS ENGINEERING, INC.
600 WILSHIRE BOULEVARD, SUITE 760
LOS ANGELES, CALIFORNIA 90017
P. 213.627.6687

MEP ENGINEER:
INNODEZ DESIGN AND ENGINEERING
726 FOXBROUGH PLACE
PLEASANTON, CALIFORNIA 94566
P. 424.414.0997

REVISION: DATE: COMMENT:

ISSUE:
2 REVISION #2 06.03.22 PLAN CHECK CORRECTIONS
1 REVISION #1 04.04.22 PLAN CHECK CORRECTIONS

SEAL:

LICENSED ARCHITECT
CHRISTOPHER A. NEUBERT
C-29005
05.31.23
RENEWAL DATE
STATE OF CALIFORNIA

Project No. 2104
ADU PROGRAM
CITY OF FRESNO
CALIFORNIA

DRAWING TITLE:
ADU 03 - CRAFTSMAN
REFLECTED CEILING PLAN
LIGHTING SCHEDULE

DATE: JUNE 3, 2022
SCALE: AS NOTED
DRAWN BY:

© Aaron Neubert Architects, INC. 2022

A.110c

CALIFORNIA DEPARTMENT OF FORESTRY & FIRE PROTECTION
OFFICE OF THE STATE FIRE MARSHAL
FIRE ENGINEERING - BUILDING MATERIALS LISTING PROGRAM

LISTING SERVICE

LISTING No. 7263-1610:0142 Page 1 of 1

CATEGORY: 7263 -- SMOKE ALARM-COMBINATION SMOKE/CARBON MONOXIDE (PHOTOELECTRIC)

LISTEE: KIDDE SAFETY4820 Centennial Blvd, Suite 145, Colorado Springs, CO 80919
Contact: Larry Ratzlaff (847) 214-1190
Email: larry.ratzlaff@carrier.com

DESIGN: *Model KN-COPE-IC is a 120 VAC powered with a 9 volt backup photoelectric type smoke and electrochemical carbon monoxide (CO) alarm. *Unit is equipped with alarm silence feature and have a 10 year end of life timer. Refer to listee's data sheet for detailed product description and operational considerations.

RATING: Model KN-COPE-IC: 120 VAC with 9 volt backup
Approved batteries: Duracell MN1604 or MX1604, Energizer 522 or Gold Peak 1604A

INSTALLATION: In accordance with listee's printed installation instructions, applicable codes and ordinances and in a manner acceptable to the authority having jurisdiction.

MARKING: Listee's name, model number, electrical rating, and UL label.

APPROVAL: Listed as a single/multiple station photoelectric smoke and electrochemical carbon monoxide (CO) alarm.

NOTE:
1. The photoelectric type alarms are generally more effective at detecting slow, smoldering fires which smolder for hours before bursting into flame. Sources of these fires may include cigarettes burning in couches or bedding. The ionization type alarms are generally more effective at detecting fast, flaming fires which consume combustible materials rapidly and spread quickly. Sources of these fires may include paper burning in a waste container or a grease fire in the kitchen.

2. *Meet the new smoke alarm requirement (SB1394).

3. *Formerly 7257-1610:0142

*Rev. 06-10-15 bh

This listing is based upon technical data submitted by the applicant. CSFM Fire Engineering staff has reviewed the test results and/or other data but does not make an independent verification of any claims. This listing is not an endorsement or recommendation of the item listed. This listing should not be used to verify correct operational requirements or installation criteria. Refer to listee's data sheet, installation instructions and/or other

Date Issued: **July 01, 2021** *Listing Expires* **June 30, 2022**

Authorized By: ***DAVID CASTILLO,*** *M.E., F.P.E.*
Fire Engineering Division

03 SMOKE/ CARBON MONOXIDE ALARM SPECIFICATION
SCALE: N/A

FRESNO ADU

GENERAL NOTES:
1. Luminaires shall have appropriate UL or other label as required by local codes.
2. Luminaires shall include accessories for installation according to local and national codes.
3. Contractor shall verify the following prior to ordering luminaires:
   a. locations and recess depths and any structural and other conflicts.
   b. final voltages and ceiling trim compatibility.
   c. ceilings more than ¾3/4" thick which limits trim compatibility.
   d. luminaires in insulated ceilings, necessitating the need for insulated ceiling type housings.
4. Contractor shall provide approved fire-rated enclosures for luminaires located in a fire-rated ceiling.
5. Responsibility for emergency lighting, code compliance, and circuiting to meet code conformance remains with the Architect and Electrical Engineer as required by law.
6. Contractor shall submit luminaire substitutions prior to bid for review. Contractor shall supply a sample and/or photometric data if requested. If substitution is rejected, Contractor shall provide specified product.
7. Luminaire voltages to be determined by Project Electrical Engineer.
8. All luminaire sockets shall be labeled permanently, in the factory, with wattages indicated in "Lamp Specification" column, not maximum wattages.

TYPE	DESCRIPTION	LUMINAIRE SPECIFICATION	LAMP SPECIFICATION	INPUT WATTS	LUMINAIRE NOTES	LOCATION	REV. NO.
F1	Downlight Interior	ELCO EL490ICA housing Koto Module with Pex 4" Adjustable Phenolic Baffle	2700K 120V	14 W	White Trim	Typ. Interior	
F2	Surface mounted luminaire for sink/ vanity Damp Location	DWELED Slim Nightstick LED Wall Light WS-35819	1276 lm 3000K 120V	17 W		Bathroom	
F3	Under cabinet mounted led luminaire	Commercial Electric 16 ft. White Indoor LED Tape Light with remote 1004 105 594	180 lm/ft 3000K Dimmable 12V	4.7 W/ft		Under Cabinet	
F4	Ceiling mounted fan w/ light fixture	Home Decorators Collection Mercer 52in. LED Indoor Brushed Nickel Ceiling Fan with Light Kit and Remote	120V	14 W		Bedroom	
F5	Surface mounted luminaire for entryway Exterior	Artika Glacier 1-Light LED Wall Sconce	650 lm 3000K Dimmable 120V	9.3 W		Exterior Entry	

1

02 LIGHTING SCHEDULE
SCALE: 1/2"=1'0"

1

Provide receptacle within 25' and on the same level of mechanical equipment, (CEC section 210.63)

NOTE: Receptacles serving countertops and Work Surfaces:
a) Receptacle outlets shall not be installed in a face up position in the work surfaces.
b) Receptacle outlets shall be located on or above, but not more than 20in. above the countertop or work surface. (CEC section 210.52(C)(5))
c) Receptacle outlets shall be permitted to be mounted not more than 12in. below the countertop or work surface provided the countertop does not extend more than 6 in. beyond its support base. (CEC section 210.52(C)(5) Exception)
d) On island and peninsular countertops, receptacles may be mounted a maximum 12in. below countertop provided there are no back splashes or dividers and no means to mount within 20in. above countertop, such as an overhead cabinet. (CEC section 210.52(C)(5) Exception(2))

NOTE: EXTERIOR ELECTRICAL RECEPTACLE TO BE INSTALLED AT 1'-6" A.F.F. TYPICAL

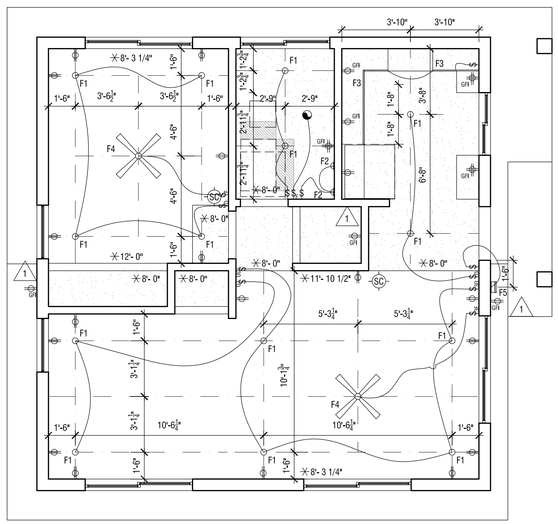

01 REFLECTED CEILING PLAN
SCALE: 1/4"=1'-0"

- CEILING FAN / LIGHT
- SC — KIDDE SAFETY, KN-COPE-IC SMOKE AND CARBON MONOXIDE (CO) ALARM
- 1 — TELEVISION CABLE
- D — DATA LINE
- T — THERMOSTAT
- VERT. DUCT
- DUCT
- UNDERGROUND DUCT
- AIR SUPPLY
- RETURN
- AIR SUPPLY
- RETURN
- TELEPHONE
- TELEPHONE (2 LINE)
- GFI — OUTLET
- GFI — QUAD OUTLET
- DEDICATED OUTLET
- FLOOR-MOUNTED OUTLET
- $ — SWITCH
- $D — DIMMER SWITCH
- $3 — 3-WAY SWITCH
- $3D — 3-WAY DIMMER SWITCH
- $F — EXHAUST FAN SWITCH
- $FT — RADIANT FLOOR HEATER CONTROL
- LED DOWN LIGHT
- LED DIRECTIONAL DOWN LIGHT
- WALL SCONCE
- PENDANT LIGHT
- LINEAR CABINET UNDERMOUNT LIGHT
- EXTERIOR LIGHT
- EXTERIOR MOTION SENSITIVE LIGHT
- S — FLUSH MOUNTED CEILING SPEAKER
- EXHAUST FAN
- DS — DAYLIGHT SENSOR

NOTE: ALL SWITCHES & OUTLETS TO HAVE SCREWLESS FACEPLATES

NOTE: EXTERIOR ELECTRICAL RECEPTACLE TO HAVE WEATHERPROOF COVER

- DROP CEILING
- VAULTED CEILING

CONSTRUCTION
FRESNO ADU-003
NOT FOR CONSTRUCTION
PLAN 3 2022

ANX

AARON NEUBERT ARCHITECTS

ADU PROGRAM

OWNER:
CITY OF FRESNO
PLANNING AND DEVELOPMENT DEPARTMENT
2600 FRESNO STREET, 3RD FLOOR
FRESNO, CA 93721

ARCHITECT:
AARON NEUBERT ARCHITECTS, INC.
2814 ROWENA AVENUE, SUITE ONE
LOS ANGELES, CALIFORNIA 90039
P. 323.953.4700 F. 323.953.4900
AARON NEUBERT CA# C-29005

STRUCTURAL ENGINEER:
NOUS ENGINEERING, INC.
600 WILSHIRE BOULEVARD, SUITE 760
LOS ANGELES, CALIFORNIA 90017
P. 213.627.6687

MEP ENGINEER:
INNODEZ DESIGN AND ENGINEERING
726 FOXBOROUGH PLACE
PLEASANTON, CALIFORNIA 94566
P. 424.414.0997

REVISION: DATE: COMMENT:

ISSUE:
2 REVISION #2 06.03.22 PLAN CHECK CORRECTIONS
1 REVISION #1 04.04.22 PLAN CHECK CORRECTIONS

SEAL:

LICENSED ARCHITECT — JOSEPH A. NEUBERT — C-29005 — 06.30.23 RENEWAL DATE — STATE OF CALIFORNIA

Project No. 2104

ADU PROGRAM
CITY OF FRESNO
CALIFORNIA

DRAWING TITLE:

ADU 03 ALT - CRAFTSMAN
REFLECTED CEILING PLAN
LIGHTING SCHEDULE

DATE: JUNE 3, 2022
SCALE: AS NOTED
DRAWN BY:

A.110c_alt

© Aaron Neubert Architects, Inc. 2022

CALIFORNIA DEPARTMENT OF FORESTRY & FIRE PROTECTION
OFFICE OF THE STATE FIRE MARSHAL
FIRE ENGINEERING - BUILDING MATERIALS LISTING PROGRAM

LISTING SERVICE

LISTING No. 7263-1610:0142 Page 1 of 1

CATEGORY: 7263 -- SMOKE ALARM-COMBINATION SMOKE/CARBON MONOXIDE (PHOTOELECTRIC)

LISTEE: KIDDE SAFETY4820 Centennial Blvd, Suite 145, Colorado Springs, CO 80919
Contact: Larry Ratzlaff (847) 214-1190
Email: larry.ratzlaff@carrier.com

DESIGN: *Model KN-COPE-IC is a 120 VAC powered with a 9 volt backup photoelectric type smoke and electrochemical carbon monoxide (CO) alarm. *Unit is equipped with alarm silence feature and have a 10 year end of life timer. Refer to listee's data sheet for detailed product description and operational considerations.

RATING: Model KN-COPE-IC: 120 VAC with 9 volt backup
Approved batteries: Duracell MN1604 or MX1604, Energizer 522 or Gold Peak 1604A

INSTALLATION: In accordance with listee's printed installation instructions, applicable codes and ordinances and in a manner acceptable to the authority having jurisdiction.

MARKING: Listee's name, model number, electrical rating, and UL label.

APPROVAL: Listed as a single/multiple station photoelectric smoke and electrochemical carbon monoxide (CO) alarm.

NOTE:
1. The photoelectric type alarms are generally more effective at detecting slow, smoldering fires which smolder for hours before bursting into flame. Sources of these fires may include cigarettes burning in couches or bedding. The ionization type alarms are generally more effective at detecting fast, flaming fires which consume combustible materials rapidly and spread quickly. Sources of these fires may include paper burning in a waste container or a grease fire in the kitchen.

2. *Meet the new smoke alarm requirement (SB1394).

3. *Formerly 7257-1610:0142

*Rev. 06-10-15 bh

This listing is based upon technical data submitted by the applicant. CSFM Fire Engineering staff has reviewed the test results and/or other data but does not make an independent verification of any claims. This listing is not an endorsement or recommendation of the item listed. This listing should not be used to verify correct operational requirements or installation criteria. Refer to listee's data sheet, installation instructions and/or other

Date Issued: **July 01, 2021** *Listing Expires* **June 30, 2022**

Authorized By: ***DAVID CASTILLO,*** *M.E., F.P.E.*
Fire Engineering Division

03 SMOKE/ CARBON MONOXIDE ALARM SPECIFICATION
SCALE: N/A

FRESNO ADU

GENERAL NOTES:
1. Luminaires shall have appropriate UL or other label as required by local codes.
2. Luminaires shall include accessories for installation according to local and national codes.
3. Contractor shall verify the following prior to ordering luminaires:
   a. locations and recess depths and any structural and other conflicts.
   b. final voltages and ceiling trim compatibility.
   c. ceilings more than ¾3/4" thick which limits trim compatibility.
   d. luminaires in insulated ceilings, necessitating the need for insulated ceiling type housings.
4. Contractor shall provide approved fire-rated enclosures for luminaires located in a fire-rated ceiling.
5. Responsibility for emergency lighting, code compliance, and circuiting to meet code conformance remains with the Architect and Electrical Engineer as required by law.
6. Contractor shall submit luminaire substitutions prior to bid for review. Contractor shall supply a sample and/or photometric data if requested. If substitution is rejected, Contractor shall provide specified product.
7. Luminaire voltages to be determined by Project Electrical Engineer.
8. All luminaire sockets shall be labeled permanently, in the factory, with wattages indicated in *Lamp Specification* column, not maximum wattages.

TYPE	DESCRIPTION	LUMINAIRE SPECIFICATION	LAMP SPECIFICATION	INPUT WATTS	LUMINAIRE NOTES	LOCATION	REV. NO.
F1	Downlight Interior	ELCO EL490ICA housing Koto Module with Pex 4" Adjustable Phenolic Baffle	2700K 120V	14 W	White Trim	Typ. Interior	
F2	Surface mounted luminaire for sink/ vanity Damp Location	DWELED Slim Nightstick LED Wall Light WS-35819	1276 lm 3000K 120V	17 W		Bathroom	
F3	Under cabinet mounted led luminaire	Commercial Electric 16 ft. White Indoor LED Tape Light with remote 1004 105 594	180 lm/ft 3000K Dimmable 12V	4.7 W/ft		Under Cabinet	
F4	Ceiling mounted fan w/ light fixture	Home Decorators Collection Mercer 52in. LED Indoor Brushed Nickel Ceiling Fan with Light Kit and Remote	120V	14 W		Bedroom	
F5	Surface mounted luminaire for entryway Exterior	Artika Glacier 1-Light LED Wall Sconce	650 lm 3000K Dimmable 120V	9.3 W		Exterior Entry	

1

02 LIGHTING SCHEDULE
SCALE: 1/2"=1'0"

1

Provide receptacle within 25' and on the same level of mechanical equipment. (CEC section 210.63)

NOTE: Receptacles serving countertops and Work Surfaces:
a) Receptacle outlets shall not be installed in a face up position in the work surfaces.
b) Receptacle outlets shall be located on or above, but not more than 20in. above the countertop or work surface. (CEC section 210.52(C)(5))
c) Receptacle outlets shall be permitted to be mounted not more than 12in. below the countertop or work surface provided the countertop does not extend more than 6 in. beyond its support base. (CEC section 210.52(C)(5) Exception)
d) On island and peninsular countertops, receptacles may be mounted a maximum 12in. below countertop provided there are no back splashes or dividers and no means to mount within 20in. above countertop, such as an overhead cabinet. (CEC section 210.52(C)(5) Exception(2))

NOTE: EXTERIOR ELECTRICAL RECEPTACLE TO BE INSTALLED AT 1'-6" A.F.F. TYPICAL

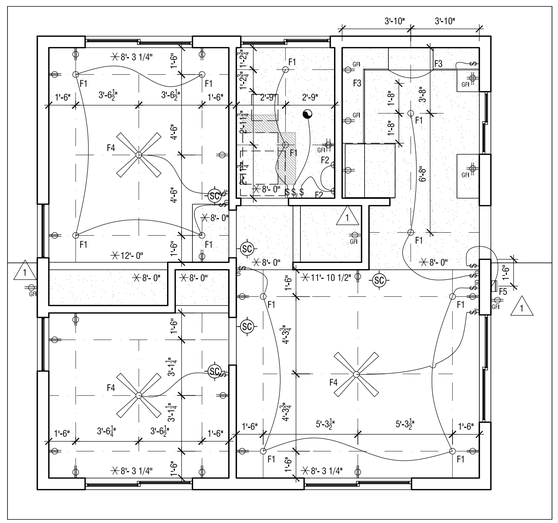

01 REFLECTED CEILING PLAN
SCALE: 1/4"=1'-0"

CEILING FAN / LIGHT
KIDDE SAFETY, KN-COPE-IC SMOKE AND CARBON MONOXIDE (CO) ALARM
TELEVISION CABLE
DATA LINE
THERMOSTAT
VERT. DUCT
DUCT
UNDERGROUND DUCT
AIR SUPPLY
RETURN
AIR SUPPLY
RETURN
TELEPHONE
TELEPHONE (2 LINE)
OUTLET
QUAD OUTLET
DEDICATED OUTLET
FLOOR-MOUNTED OUTLET
SWITCH
DIMMER SWITCH
3-WAY SWITCH
3-WAY DIMMER SWITCH
EXHAUST FAN SWITCH
RADIANT FLOOR HEATER CONTROL
LED DOWN LIGHT
LED DIRECTIONAL DOWN LIGHT
WALL SCONCE
PENDANT LIGHT
LINEAR CABINET UNDERMOUNT LIGHT
EXTERIOR LIGHT
EXTERIOR MOTION SENSITIVE LIGHT
FLUSH MOUNTED CEILING SPEAKER
EXHAUST FAN
DAYLIGHT SENSOR

NOTE: ALL SWITCHES & OUTLETS TO HAVE SCREWLESS FACEPLATES

NOTE: EXTERIOR ELECTRICAL RECEPTACLE TO HAVE WEATHERPROOF COVER

DROP CEILING
VAULTED CEILING

CONSTRUCTION
FRESNO ADU-003
NOT FOR CONSTRUCTION
PLAN 3 22

ANX

AARON NEUBERT ARCHITECTS

ADU PROGRAM

OWNER:
CITY OF FRESNO
PLANNING AND DEVELOPMENT DEPARTMENT
2600 FRESNO STREET, 3RD FLOOR
FRESNO, CA 93721

ARCHITECT:
AARON NEUBERT ARCHITECTS, INC.
2814 ROWENA AVENUE, SUITE ONE
LOS ANGELES, CALIFORNIA 90039
P. 323.953.4700 F. 323.953.4900

AARON NEUBERT CA# C-29005

STRUCTURAL ENGINEER:
NOUS ENGINEERING, INC.
600 WILSHIRE BOULEVARD, SUITE 760
LOS ANGELES, CALIFORNIA 90017
P. 213.627.6687

MEP ENGINEER:
INNODEZ DESIGN AND ENGINEERING
726 FOXBROUGH PLACE
PLEASANTON, CALIFORNIA 94566
P. 424.414.0997

REVISION: DATE: COMMENT:

ISSUE:
2 REVISION #2 06.03.22 PLAN CHECK CORRECTIONS
1 REVISION #1 04.04.22 PLAN CHECK CORRECTIONS

SEAL:

LICENSED ARCHITECT
CHRISTOPHER A. NEUBERT
C-29005
05.31.23
RENEWAL DATE
STATE OF CALIFORNIA

Project No. 2104

ADU PROGRAM

CITY OF FRESNO
CALIFORNIA

DRAWING TITLE:

ADU 03 - GABLE
REFLECTED CEILING PLAN
LIGHTING SCHEDULE

DATE: JUNE 3, 2022
SCALE: AS NOTED
DRAWN BY:

© Aaron Neubert Architects, INC. 2022

A.110g

CALIFORNIA DEPARTMENT OF FORESTRY & FIRE PROTECTION
OFFICE OF THE STATE FIRE MARSHAL
FIRE ENGINEERING - BUILDING MATERIALS LISTING PROGRAM

LISTING SERVICE

LISTING No. 7263-1610:0142 Page 1 of 1

CATEGORY: 7263 -- SMOKE ALARM-COMBINATION SMOKE/CARBON MONOXIDE (PHOTOELECTRIC)

LISTEE: KIDDE SAFETY4820 Centennial Blvd, Suite 145, Colorado Springs, CO 80919
Contact: Larry Ratzlaff (847) 214-1190
Email: larry.ratzlaff@carrier.com

DESIGN: *Model KN-COPE-IC is a 120 VAC powered with a 9 volt backup photoelectric type smoke and electrochemical carbon monoxide (CO) alarm. *Unit is equipped with alarm silence feature and have a 10 year end of life timer. Refer to listee's data sheet for detailed product description and operational considerations.

RATING: Model KN-COPE-IC: 120 VAC with 9 volt backup
Approved batteries: Duracell MN1604 or MX1604, Energizer 522 or Gold Peak 1604A

INSTALLATION: In accordance with listee's printed installation instructions, applicable codes and ordinances and in a manner acceptable to the authority having jurisdiction.

MARKING: Listee's name, model number, electrical rating, and UL label.

APPROVAL: Listed as a single/multiple station photoelectric smoke and electrochemical carbon monoxide (CO) alarm.

NOTE:
1. The photoelectric type alarms are generally more effective at detecting slow, smoldering fires which smolder for hours before bursting into flame. Sources of these fires may include cigarettes burning in couches or bedding. The ionization type alarms are generally more effective at detecting fast, flaming fires which consume combustible materials rapidly and spread quickly. Sources of these fires may include paper burning in a waste container or a grease fire in the kitchen.
2. *Meet the new smoke alarm requirement (SB1394).
3. *Formerly 7257-1610:0142

*Rev. 06-10-15 bh

This listing is based upon technical data submitted by the applicant. CSFM Fire Engineering staff has reviewed the test results and/or other data but does not make an independent verification of any claims. This listing is not an endorsement or recommendation of the item listed. This listing should not be used to verify correct operational requirements or installation criteria. Refer to listee's data sheet, installation instructions and/or other

Date Issued: **July 01, 2021** *Listing Expires* **June 30, 2022**

Authorized By: ***DAVID CASTILLO,*** *M.E., F.P.E.*
Fire Engineering Division

03 SMOKE/ CARBON MONOXIDE ALARM SPECIFICATION
SCALE: N/A

FRESNO ADU

GENERAL NOTES:
1. Luminaires shall have appropriate UL or other label as required by local codes.
2. Luminaires shall include accessories for installation according to local and national codes.
3. Contractor shall verify the following prior to ordering luminaires:
   a. locations and recess depths and any structural and other conflicts.
   b. final voltages and ceiling trim compatibility.
   c. ceilings more than ¾/3/4" thick which limits trim compatibility.
   d. luminaires in insulated ceilings, necessitating the need for insulated ceiling type housings.
4. Contractor shall provide approved fire-rated enclosures for luminaires located in a fire-rated ceiling.
5. Responsibility for emergency lighting, code compliance, and circuiting to meet code conformance remains with the Architect and Electrical Engineer as required by law.
6. Contractor shall submit luminaire substitutions prior to bid for review. Contractor shall supply a sample and/or photometric data if requested. If substitution is rejected, Contractor shall provide specified product.
7. Luminaire voltages to be determined by Project Electrical Engineer.
8. All luminaire sockets shall be labeled permanently, in the factory, with wattages indicated in "Lamp Specification" column, not maximum wattages.

TYPE	DESCRIPTION	LUMINAIRE SPECIFICATION	LAMP SPECIFICATION	INPUT WATTS	LUMINAIRE NOTES	LOCATION	REV. NO.
F1	Downlight Interior	ELCO EL490ICA housing Koto Module with Pex 4" Adjustable Phenolic Baffle	2700K 120V	14 W	White Trim	Typ. Interior	
F2	Surface mounted luminaire for sink/ vanity Damp Location	DWELED Slim Nightstick LED Wall Light WS-35819	1276 lm 3000K 120V	17 W		Bathroom	
F3	Under cabinet mounted led luminaire	Commercial Electric 16 ft. White Indoor LED Tape Light with remote 1004 105 594	180 lm/ft 3000K Dimmable 12V	4.7 W/ft		Under Cabinet	
F4	Ceiling mounted fan w/ light fixture	Home Decorators Collection Mercer 52in. LED Indoor Brushed Nickel Ceiling Fan with Light Kit and Remote	120V	14 W		Bedroom	
F5	Surface mounted luminaire for entryway Exterior	Artika Glacier 1-Light LED Wall Sconce	650 lm 3000K Dimmable 120V	9.3 W		Exterior Entry	

1

02 LIGHTING SCHEDULE
SCALE: 1/2"=1'0"

1

Provide receptacle within 25' and on the same level of mechanical equipment, (CEC section 210.63)

NOTE: Receptacles serving countertops and Work Surfaces:
a) Receptacle outlets shall not be installed in a face up position in the work surfaces,
b) Receptacle outlets shall be located on or above, but not more than 20in. above the countertop or work surface. (CEC section 210.52(C)(5))
c) Receptacle outlets shall be permitted to be mounted not more than 12in. below the countertop or work surface provided the countertop does not extend more than 6 in. beyond its support base. (CEC section 210.52(C)(5) Exception)
d) On island and peninsular countertops, receptacles may be mounted a maximum 12in. below countertop provided there are no back splashes or dividers and no means to mount within 20in. above countertop, such as an overhead cabinet. (CEC section 210.52(C)(5) Exception(2))

NOTE: EXTERIOR ELECTRICAL RECEPTACLE TO BE INSTALLED AT 1'-6" A.F.F. TYPICAL

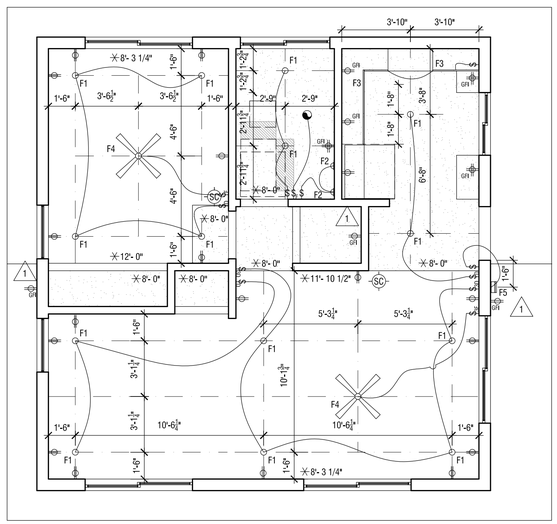

01 REFLECTED CEILING PLAN
SCALE: 1/4"=1'-0"

- CEILING FAN / LIGHT
- SC — KIDDE SAFETY, KN-COPE-IC SMOKE AND CARBON MONOXIDE (CO) ALARM
- 1 — TELEVISION CABLE
- DATA LINE
- THERMOSTAT
- VERT. DUCT
- DUCT
- UNDERGROUND DUCT
- AIR SUPPLY
- RETURN
- AIR SUPPLY
- RETURN
- TELEPHONE
- TELEPHONE (2 LINE)
- OUTLET
- QUAD OUTLET
- DEDICATED OUTLET
- FLOOR-MOUNTED OUTLET
- SWITCH
- DIMMER SWITCH
- 3-WAY SWITCH
- 3-WAY DIMMER SWITCH
- EXHAUST FAN SWITCH
- RADIANT FLOOR HEATER CONTROL
- LED DOWN LIGHT
- LED DIRECTIONAL DOWN LIGHT
- WALL SCONCE
- PENDANT LIGHT
- LINEAR CABINET UNDERMOUNT LIGHT
- EXTERIOR LIGHT
- EXTERIOR MOTION SENSITIVE LIGHT
- FLUSH MOUNTED CEILING SPEAKER
- EXHAUST FAN
- DAYLIGHT SENSOR

NOTE: ALL SWITCHES & OUTLETS TO HAVE SCREWLESS FACEPLATES

NOTE: EXTERIOR ELECTRICAL RECEPTACLE TO HAVE WEATHERPROOF COVER

- DROP CEILING
- VAULTED CEILING

CONSTRUCTION
FRESNO ADU-003
NOT FOR CONSTRUCTION
PLAN 3 22

ANX

AARON NEUBERT ARCHITECTS

ADU PROGRAM

OWNER:
CITY OF FRESNO
PLANNING AND DEVELOPMENT DEPARTMENT
2600 FRESNO STREET, 3RD FLOOR
FRESNO, CA 93721

ARCHITECT:
AARON NEUBERT ARCHITECTS, INC.
2814 ROWENA AVENUE, SUITE ONE
LOS ANGELES, CALIFORNIA 90039
P. 323.953.4700 F. 323.953.4900
AARON NEUBERT CA# C-29005

STRUCTURAL ENGINEER:
NOUS ENGINEERING, INC.
600 WILSHIRE BOULEVARD, SUITE 760
LOS ANGELES, CALIFORNIA 90017
P. 213.627.6687

MEP ENGINEER:
INNODEZ DESIGN AND ENGINEERING
726 FOXBROUGH PLACE
PLEASANTON, CALIFORNIA 94566
P. 424.414.0997

REVISION: DATE: COMMENT:

ISSUE:
2 REVISION #2 06.03.22 PLAN CHECK CORRECTIONS
1 REVISION #1 04.04.22 PLAN CHECK CORRECTIONS

SEAL:

LICENSED ARCHITECT — AARON NEUBERT — C-29005 — 06.30.23 RENEWAL DATE — STATE OF CALIFORNIA

Project No. 2104

ADU PROGRAM
CITY OF FRESNO
CALIFORNIA

DRAWING TITLE:

ADU 03 ALT - GABLE
REFLECTED CEILING PLAN
LIGHTING SCHEDULE

DATE: JUNE 3, 2022
SCALE: AS NOTED
DRAWN BY:

A.110g_alt

© Aaron Neubert Architects, Inc. 2022

CALIFORNIA DEPARTMENT OF FORESTRY & FIRE PROTECTION
OFFICE OF THE STATE FIRE MARSHAL
FIRE ENGINEERING - BUILDING MATERIALS LISTING PROGRAM

LISTING SERVICE

LISTING No. 7263-1610:0142 Page 1 of 1

CATEGORY: 7263 -- SMOKE ALARM-COMBINATION SMOKE/CARBON MONOXIDE (PHOTOELECTRIC)

LISTEE: KIDDE SAFETY4820 Centennial Blvd, Suite 145, Colorado Springs, CO 80919
Contact: Larry Ratzlaff (847) 214-1190
Email: larry.ratzlaff@carrier.com

DESIGN: *Model KN-COPE-IC is a 120 VAC powered with a 9 volt backup photoelectric type smoke and electrochemical carbon monoxide (CO) alarm. *Unit is equipped with alarm silence feature and have a 10 year end of life timer. Refer to listee's data sheet for detailed product description and operational considerations.

RATING: Model KN-COPE-IC: 120 VAC with 9 volt backup
Approved batteries: Duracell MN1604 or MX1604, Energizer 522 or Gold Peak 1604A

INSTALLATION: In accordance with listee's printed installation instructions, applicable codes and ordinances and in a manner acceptable to the authority having jurisdiction.

MARKING: Listee's name, model number, electrical rating, and UL label.

APPROVAL: Listed as a single/multiple station photoelectric smoke and electrochemical carbon monoxide (CO) alarm.

NOTE:
1. The photoelectric type alarms are generally more effective at detecting slow, smoldering fires which smolder for hours before bursting into flame. Sources of these fires may include cigarettes burning in couches or bedding. The ionization type alarms are generally more effective at detecting fast, flaming fires which consume combustible materials rapidly and spread quickly. Sources of these fires may include paper burning in a waste container or a grease fire in the kitchen.
2. *Meet the new smoke alarm requirement (SB1394).
3. *Formerly 7257-1610:0142

*Rev. 06-10-15 bh

This listing is based upon technical data submitted by the applicant. CSFM Fire Engineering staff has reviewed the test results and/or other data but does not make an independent verification of any claims. This listing is not an endorsement or recommendation of the item listed. This listing should not be used to verify correct operational requirements or installation criteria. Refer to listee's data sheet, installation instructions and/or other

Date Issued: **July 01, 2021** *Listing Expires* **June 30, 2022**

Authorized By: ***DAVID CASTILLO,*** *M.E., F.P.E.*
Fire Engineering Division

03 SMOKE/ CARBON MONOXIDE ALARM SPECIFICATION
SCALE: N/A

FRESNO ADU

GENERAL NOTES:
1. Luminaires shall have appropriate UL or other label as required by local codes.
2. Luminaires shall include accessories for installation according to local and national codes.
3. Contractor shall verify the following prior to ordering luminaires:
   a. locations and recess depths and any structural and other conflicts.
   b. final voltages and ceiling trim compatibility.
   c. ceilings more than ¾3/4" thick which limits trim compatibility.
   d. luminaires in insulated ceilings, necessitating the need for insulated ceiling type housings.
4. Contractor shall provide approved fire-rated enclosures for luminaires located in a fire-rated ceiling.
5. Responsibility for emergency lighting, code compliance, and circuiting to meet code conformance remains with the Architect and Electrical Engineer as required by law.
6. Contractor shall submit luminaire substitutions prior to bid for review. Contractor shall supply a sample and/or photometric data if requested. If substitution is rejected, Contractor shall provide specified product.
7. Luminaire voltages to be determined by Project Electrical Engineer.
8. All luminaire sockets shall be labeled permanently, in the factory, with wattages indicated in "Lamp Specification" column, not maximum wattages.

TYPE	DESCRIPTION	LUMINAIRE SPECIFICATION	LAMP SPECIFICATION	INPUT WATTS	LUMINAIRE NOTES	LOCATION	REV. NO.
F1	Downlight Interior	ELCO EL490ICA housing Koto Module with Pex 4" Adjustable Phenolic Baffle	2700K 120V	14 W	White Trim	Typ. Interior	
F2	Surface mounted luminaire for sink/ vanity Damp Location	DWELED Slim Nightstick LED Wall Light WS-35819	1276 lm 3000K 120V	17 W		Bathroom	
F3	Under cabinet mounted led luminaire	Commercial Electric 16 ft. White Indoor LED Tape Light with remote 1004 105 594	180 lm/ft 3000K Dimmable 12V	4.7 W/ft		Under Cabinet	
F4	Ceiling mounted fan w/ light fixture	Home Decorators Collection Mercer 52in. LED Indoor Brushed Nickel Ceiling Fan with Light Kit and Remote	120V	14 W		Bedroom	
F5	Surface mounted luminaire for entryway Exterior	Artika Glacier 1-Light LED Wall Sconce	650 lm 3000K Dimmable 120V	9.3 W		Exterior Entry	

1

02 LIGHTING SCHEDULE
SCALE: 1/2"=1'0"

1

Provide receptacle within 25' and on the same level of mechanical equipment. (CEC section 210.63)

NOTE: Receptacles serving countertops and Work Surfaces:
a) Receptacle outlets shall not be installed in a face up position in the work surfaces.
b) Receptacle outlets shall be located on or above, but not more than 20in. above the countertop or work surface. (CEC section 210.52(C)(5))
c) Receptacle outlets shall be permitted to be mounted not more than 12in. below the countertop or work surface provided the countertop does not extend more than 6 in. beyond its support base. (CEC section 210.52(C)(5) Exception)
d) On island and peninsular countertops, receptacles may be mounted a maximum 12in. below countertop provided there are no back splashes or dividers and no means to mount within 20in. above countertop, such as an overhead cabinet. (CEC section 210.52(C)(5) Exception(2))

NOTE: EXTERIOR ELECTRICAL RECEPTACLE TO BE INSTALLED AT 1'-6" A.F.F. TYPICAL

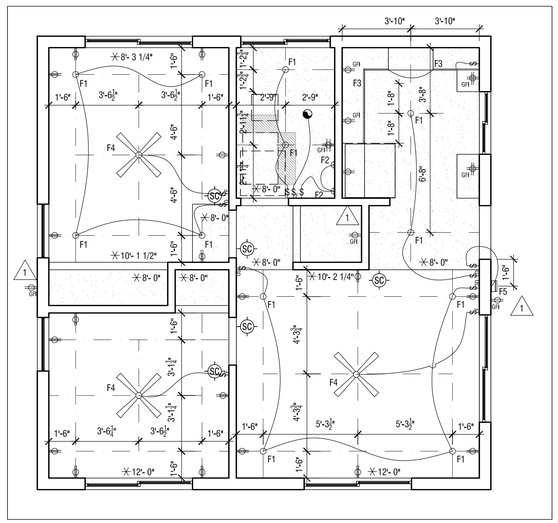

01 REFLECTED CEILING PLAN
SCALE: 1/4"=1'-0"

- CEILING FAN / LIGHT
- KIDDE SAFETY, KN-COPE-IC SMOKE AND CARBON MONOXIDE (CO) ALARM
- TELEVISION CABLE
- DATA LINE
- THERMOSTAT
- VERT. DUCT
- DUCT
- UNDERGROUND DUCT
- AIR SUPPLY
- RETURN
- AIR SUPPLY
- RETURN
- TELEPHONE
- TELEPHONE (2 LINE)
- OUTLET
- QUAD OUTLET
- DEDICATED OUTLET
- FLOOR-MOUNTED OUTLET
- SWITCH
- DIMMER SWITCH
- 3-WAY SWITCH
- 3-WAY DIMMER SWITCH
- EXHAUST FAN SWITCH
- RADIANT FLOOR HEATER CONTROL
- LED DOWN LIGHT
- LED DIRECTIONAL DOWN LIGHT
- WALL SCONCE
- PENDANT LIGHT
- LINEAR CABINET UNDERMOUNT LIGHT
- EXTERIOR LIGHT
- EXTERIOR MOTION SENSITIVE LIGHT
- FLUSH MOUNTED CEILING SPEAKER
- EXHAUST FAN
- DAYLIGHT SENSOR

NOTE: ALL SWITCHES & OUTLETS TO HAVE SCREWLESS FACEPLATES

NOTE: EXTERIOR ELECTRICAL RECEPTACLE TO HAVE WEATHERPROOF COVER

- DROP CEILING
- VAULTED CEILING

CITY OF FRESNO
DEVELOPMENT & RESOURCE MANAGEMENT
APPROVED FOR CONSTRUCTION
PLAN CHECK NO. ADU-003
DATE 2/2/23
FRESNO ADU
PLAN 3

ANX

AARON NEUBERT ARCHITECTS

ADU PROGRAM

OWNER:
CITY OF FRESNO
PLANNING AND DEVELOPMENT DEPARTMENT
2600 FRESNO STREET, 3RD FLOOR
FRESNO, CA 93721

ARCHITECT:
AARON NEUBERT ARCHITECTS, INC.
2814 ROWENA AVENUE, SUITE ONE
LOS ANGELES, CALIFORNIA 90039
P. 323.953.4700 F. 323.953.4900

AARON NEUBERT CA# C-29005

STRUCTURAL ENGINEER:
NOUS ENGINEERING, INC.
600 WILSHIRE BOULEVARD, SUITE 760
LOS ANGELES, CALIFORNIA 90017
P. 213.627.6687

MEP ENGINEER:
INNODEZ DESIGN AND ENGINEERING
726 FOXBOROUGH PLACE
PLEASANTON, CALIFORNIA 94566
P. 424.414.0997

REVISION: DATE: COMMENT:

ISSUE:
2 REVISION #2 06.03.22 PLAN CHECK CORRECTIONS
1 REVISION #1 04.04.22 PLAN CHECK CORRECTIONS

SEAL:
LICENSED ARCHITECT
CHRISTOPHER A. NEUBERT
C-29005
05.31.23
RENEWAL DATE
STATE OF CALIFORNIA

Project No. 2104
ADU PROGRAM
CITY OF FRESNO
CALIFORNIA

DRAWING TITLE:
ADU 03 - CONTEMPORARY
REFLECTED CEILING PLAN
LIGHTING SCHEDULE

DATE: JUNE 3, 2022
SCALE: AS NOTED
DRAWN BY:

© Aaron Neubert Architects, INC. 2022

A.110s

CALIFORNIA DEPARTMENT OF FORESTRY & FIRE PROTECTION
OFFICE OF THE STATE FIRE MARSHAL
FIRE ENGINEERING - BUILDING MATERIALS LISTING PROGRAM

LISTING SERVICE

LISTING No. 7263-1610:0142 Page 1 of 1

CATEGORY: 7263 -- SMOKE ALARM-COMBINATION SMOKE/CARBON MONOXIDE (PHOTOELECTRIC)

LISTEE: KIDDE SAFETY4820 Centennial Blvd, Suite 145, Colorado Springs, CO 80919
Contact: Larry Ratzlaff (847) 214-1190
Email: larry.ratzlaff@carrier.com

DESIGN: *Model KN-COPE-IC is a 120 VAC powered with a 9 volt backup photoelectric type smoke and electrochemical carbon monoxide (CO) alarm. *Unit is equipped with alarm silence feature and have a 10 year end of life timer. Refer to listee's data sheet for detailed product description and operational considerations.

RATING: Model KN-COPE-IC: 120 VAC with 9 volt backup
Approved batteries: Duracell MN1604 or MX1604, Energizer 522 or Gold Peak 1604A

INSTALLATION: In accordance with listee's printed installation instructions, applicable codes and ordinances and in a manner acceptable to the authority having jurisdiction.

MARKING: Listee's name, model number, electrical rating, and UL label.

APPROVAL: Listed as a single/multiple station photoelectric smoke and electrochemical carbon monoxide (CO) alarm.

NOTE:
1. The photoelectric type alarms are generally more effective at detecting slow, smoldering fires which smolder for hours before bursting into flame. Sources of these fires may include cigarettes burning in couches or bedding. The ionization type alarms are generally more effective at detecting fast, flaming fires which consume combustible materials rapidly and spread quickly. Sources of these fires may include paper burning in a waste container or a grease fire in the kitchen.

2. *Meet the new smoke alarm requirement (SB1394).

3. *Formerly 7257-1610:0142

*Rev. 06-10-15 bh

This listing is based upon technical data submitted by the applicant. CSFM Fire Engineering staff has reviewed the test results and/or other data but does not make an independent verification of any claims. This listing is not an endorsement or recommendation of the item listed. This listing should not be used to verify correct operational requirements or installation criteria. Refer to listee's data sheet, installation instructions and/or other

Date Issued: **July 01, 2021** *Listing Expires* **June 30, 2022**

Authorized By: ***DAVID CASTILLO,*** *M.E., F.P.E.*
Fire Engineering Division

03 SMOKE/ CARBON MONOXIDE ALARM SPECIFICATION
SCALE: N/A

FRESNO ADU

GENERAL NOTES:
1. Luminaires shall have appropriate UL or other label as required by local codes.
2. Luminaires shall include accessories for installation according to local and national codes.
3. Contractor shall verify the following prior to ordering luminaires:
   a. locations and recess depths and any structural and other conflicts.
   b. final voltages and ceiling trim compatibility.
   c. ceilings more than ¾3/4" thick which limits trim compatibility.
   d. luminaires in insulated ceilings, necessitating the need for insulated ceiling type housings.
4. Contractor shall provide approved fire-rated enclosures for luminaires located in a fire-rated ceiling.
5. Responsibility for emergency lighting, code compliance, and circuiting to meet code conformance remains with the Architect and Electrical Engineer as required by law.
6. Contractor shall submit luminaire substitutions prior to bid for review. Contractor shall supply a sample and/or photometric data if requested. If substitution is rejected, Contractor shall provide specified product.
7. Luminaire voltages to be determined by Project Electrical Engineer.
8. All luminaire sockets shall be labeled permanently, in the factory, with wattages indicated in "Lamp Specification" column, not maximum wattages.

TYPE	DESCRIPTION	LUMINAIRE SPECIFICATION	LAMP SPECIFICATION	INPUT WATTS	LUMINAIRE NOTES	LOCATION	REV. NO.
F1	Downlight Interior	ELCO EL490ICA housing Koto Module with Pex 4" Adjustable Phenolic Baffle	2700K 120V	14 W	White Trim	Typ. Interior	
F2	Surface mounted luminaire for sink/ vanity Damp Location	DWELED Slim Nightstick LED Wall Light WS-35819	1276 lm 3000K 120V	17 W		Bathroom	
F3	Under cabinet mounted led luminaire	Commercial Electric 16 ft. White Indoor LED Tape Light with remote 1004 105 594	180 lm/ft 3000K Dimmable 12V	4.7 W/ft		Under Cabinet	
F4	Ceiling mounted fan w/ light fixture	Home Decorators Collection Mercer 52in. LED Indoor Brushed Nickel Ceiling Fan with Light Kit and Remote	120V	14 W		Bedroom	
F5	Surface mounted luminaire for entryway Exterior	Artika Glacier 1-Light LED Wall Sconce	650 lm 3000K Dimmable 120V	9.3 W		Exterior Entry	

1

02 LIGHTING SCHEDULE
SCALE: 1/2"=1'0"

1

Provide receptacle within 25' and on the same level of mechanical equipment, (CEC section 210.63)

NOTE: Receptacles serving countertops and Work Surfaces:
a) Receptacle outlets shall not be installed in a face up position in the work surfaces.
b) Receptacle outlets shall be located on or above, but not more than 20in. above the countertop or work surface. (CEC section 210.52(C)(5))
c) Receptacle outlets shall be permitted to be mounted not more than 12in. below the countertop or work surface provided the countertop does not extend more than 6 in. beyond its support base. (CEC section 210.52(C)(5) Exception)
d) On island and peninsular countertops, receptacles may be mounted a maximum 12in. below countertop provided there are no back splashes or dividers and no means to mount within 20in. above countertop, such as an overhead cabinet. (CEC section 210.52(C)(5) Exception(2))

NOTE: EXTERIOR ELECTRICAL RECEPTACLE TO BE INSTALLED AT 1'-6" A.F.F. TYPICAL

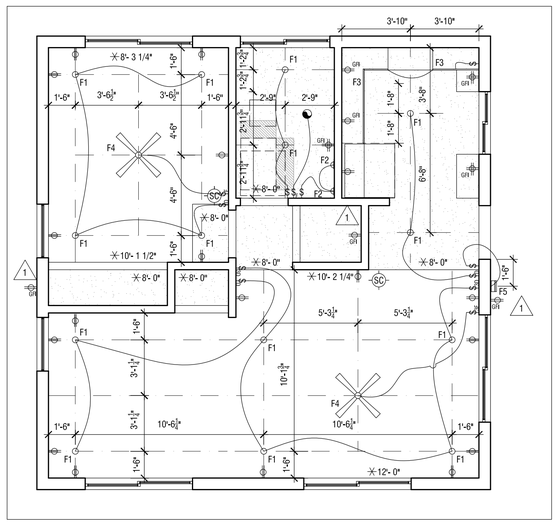

01 REFLECTED CEILING PLAN
SCALE: 1/4"=1'-0"

- CEILING FAN / LIGHT
- KIDDE SAFETY, KN-COPE-IC SMOKE AND CARBON MONOXIDE (CO) ALARM
- TELEVISION CABLE
- DATA LINE
- THERMOSTAT
- VERT. DUCT
- DUCT
- UNDERGROUND DUCT
- AIR SUPPLY
- RETURN
- AIR SUPPLY
- RETURN
- TELEPHONE
- TELEPHONE (2 LINE)
- OUTLET
- QUAD OUTLET
- DEDICATED OUTLET
- FLOOR-MOUNTED OUTLET
- SWITCH
- DIMMER SWITCH
- 3-WAY SWITCH
- 3-WAY DIMMER SWITCH
- EXHAUST FAN SWITCH
- RADIANT FLOOR HEATER CONTROL
- LED DOWN LIGHT
- LED DIRECTIONAL DOWN LIGHT
- WALL SCONCE
- PENDANT LIGHT
- LINEAR CABINET UNDERMOUNT LIGHT
- EXTERIOR LIGHT
- EXTERIOR MOTION SENSITIVE LIGHT
- FLUSH MOUNTED CEILING SPEAKER
- EXHAUST FAN
- DAYLIGHT SENSOR

NOTE: ALL SWITCHES & OUTLETS TO HAVE SCREWLESS FACEPLATES

NOTE: EXTERIOR ELECTRICAL RECEPTACLE TO HAVE WEATHERPROOF COVER

- DROP CEILING
- VAULTED CEILING

CONSTRUCTION
FRESNO ADU-003
NOT FOR CONSTRUCTION
PLAN 3 22

ANX

AARON NEUBERT ARCHITECTS

ADU PROGRAM

OWNER:
CITY OF FRESNO
PLANNING AND DEVELOPMENT DEPARTMENT
2600 FRESNO STREET, 3RD FLOOR
FRESNO, CA 93721

ARCHITECT:
AARON NEUBERT ARCHITECTS, INC.
2814 ROWENA AVENUE, SUITE ONE
LOS ANGELES, CALIFORNIA 90039
P. 323.953.4700 F. 323.953.4900
AARON NEUBERT CA# C-29005

STRUCTURAL ENGINEER:
NOUS ENGINEERING, INC.
600 WILSHIRE BOULEVARD, SUITE 760
LOS ANGELES, CALIFORNIA 90017
P. 213.627.6687

MEP ENGINEER:
INNODEZ DESIGN AND ENGINEERING
726 FOXBROUGH PLACE
PLEASANTON, CALIFORNIA 94566
P. 424.414.0997

REVISION: DATE: COMMENT:

ISSUE:
2 REVISION #2 06.03.22 PLAN CHECK CORRECTIONS
1 REVISION #1 04.04.22 PLAN CHECK CORRECTIONS

SEAL:

LICENSED ARCHITECT
JOSEPH A. NEUBERT
C-29005
05.31.23
RENEWAL DATE
STATE OF CALIFORNIA

Project No. 2104

ADU PROGRAM
CITY OF FRESNO
CALIFORNIA

DRAWING TITLE:

ADU 03 ALT - CONTEMPORARY
REFLECTED CEILING PLAN
LIGHTING SCHEDULE

DATE: JUNE 3, 2022
SCALE: AS NOTED
DRAWN BY:

A.110s_alt

© Aaron Neubert Architects, Inc. 2022

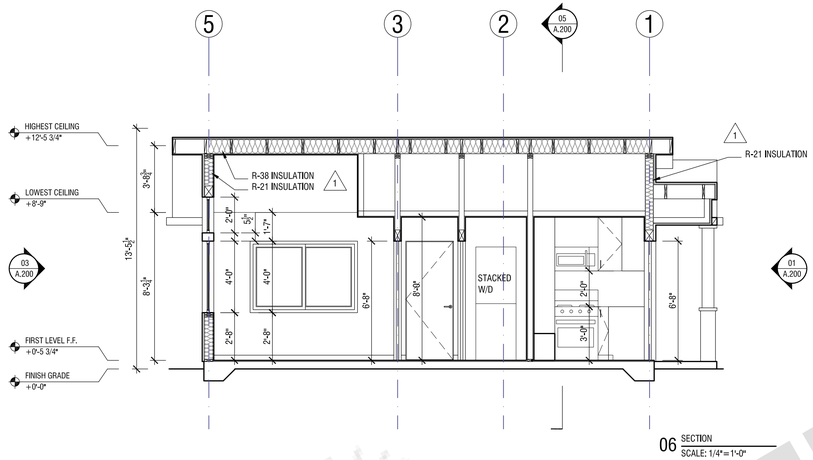

06 SECTION
SCALE: 1/4"=1'-0"

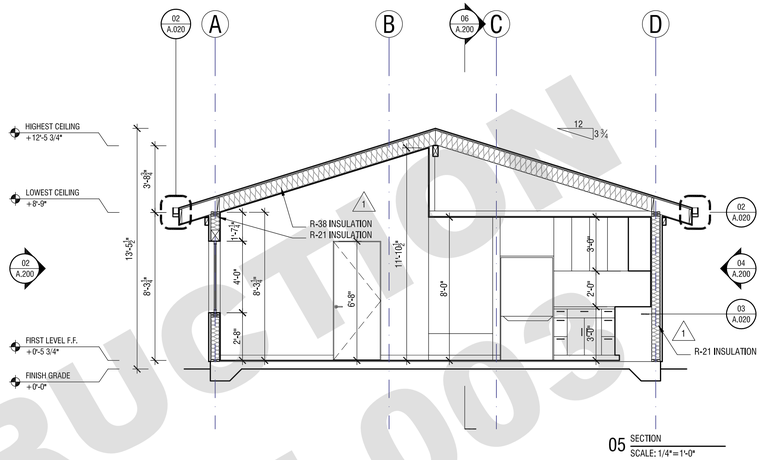

05 SECTION
SCALE: 1/4"=1'-0"

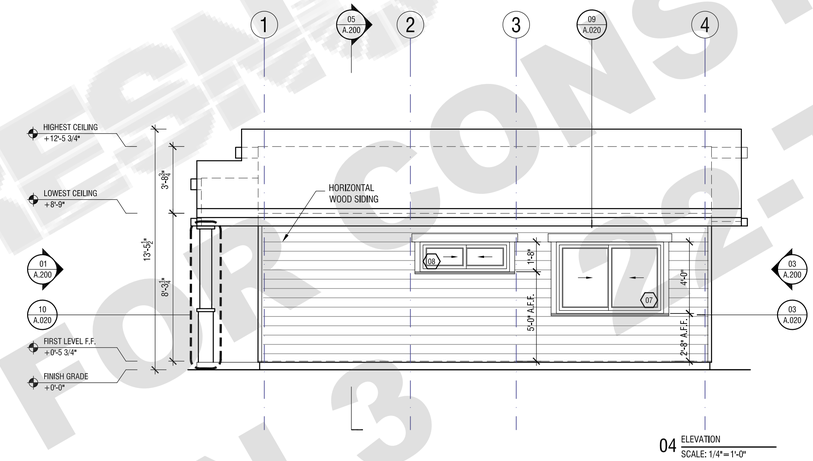

04 ELEVATION
SCALE: 1/4"=1'-0"

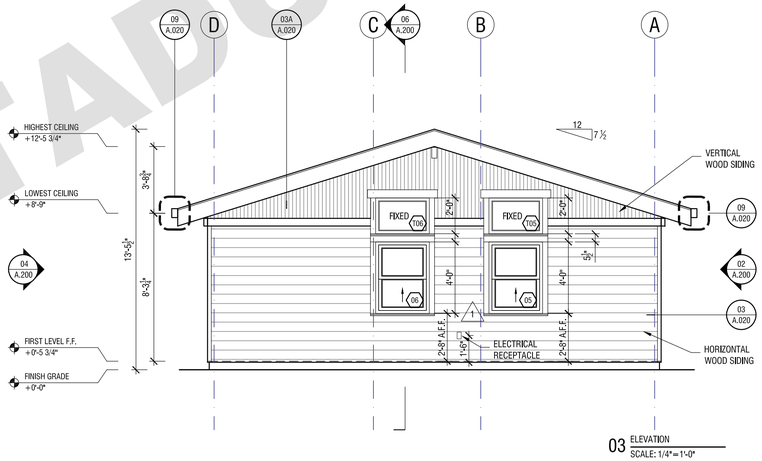

03 ELEVATION
SCALE: 1/4"=1'-0"

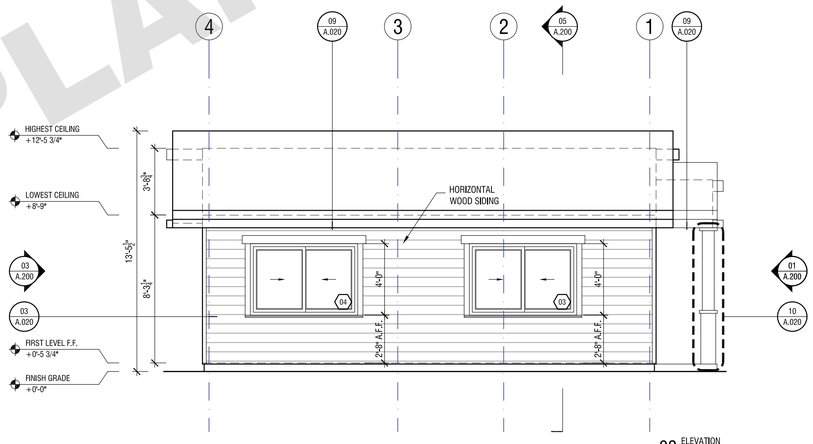

02 ELEVATION
SCALE: 1/4"=1'-0"

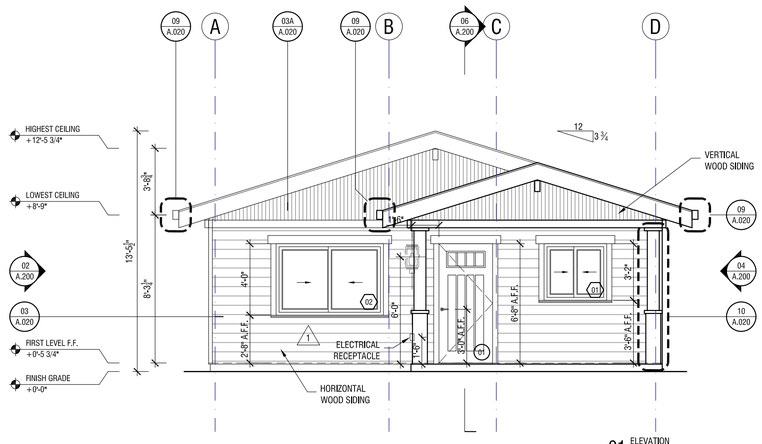

01 ELEVATION
SCALE: 1/4"=1'-0"

City of FRESNO CONSTRUCTION NOT FOR CONSTRUCTION PLAN 3 ADU-003-22

ANX
AARON NEUBERT ARCHITECTS

ADU PROGRAM

OWNER:
CITY OF FRESNO
PLANNING AND DEVELOPMENT DEPARTMENT
2600 FRESNO STREET, 3RD FLOOR
FRESNO, CA 93721

ARCHITECT:
AARON NEUBERT ARCHITECTS, INC.
2814 ROWENA AVENUE, SUITE ONE
LOS ANGELES, CALIFORNIA 90039
P. 323.953.4700 F. 323.953.4900

AARON NEUBERT CA# C-29005

STRUCTURAL ENGINEER:
NOUS ENGINEERING, INC.
600 WILSHIRE BOULEVARD, SUITE 760
LOS ANGELES, CALIFORNIA 90017
P. 213.627.6687

MEP ENGINEER:
INNODEZ DESIGN AND ENGINEERING
726 FOXBROUGH PLACE
PLEASANTON, CALIFORNIA 94566
P. 424.414.0997

REVISION: DATE: COMMENT:

ISSUE:

2 REVISION #2 06.03.22 PLAN CHECK CORRECTIONS

1 REVISION #1 04.04.22 PLAN CHECK CORRECTIONS

SEAL:

LICENSED ARCHITECT
AARON NEUBERT
C-29005
06.30.23
RENEWAL DATE
STATE OF CALIFORNIA

Project No. 2104

ADU PROGRAM

CITY OF FRESNO
CALIFORNIA

DRAWING TITLE:

ADU 03 - CRAFTSMAN
ELEVATIONS
SECTIONS

DATE: JUNE 3, 2022

SCALE: 1/4"=1'-0"

DRAWN BY:

© Aaron Neubert Architects, INC. 2022

A.200c

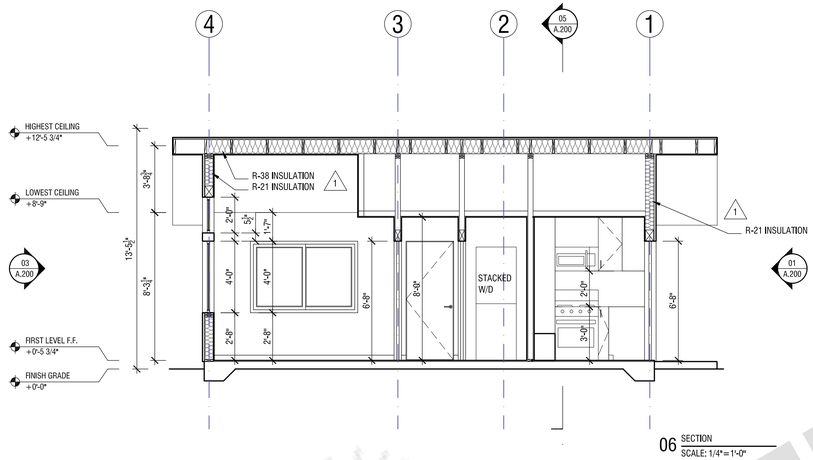

06 SECTION
SCALE: 1/4"=1'-0"

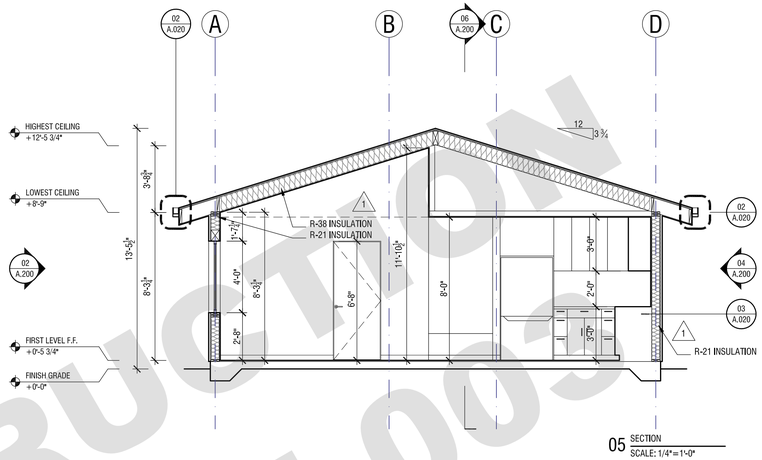

05 SECTION
SCALE: 1/4"=1'-0"

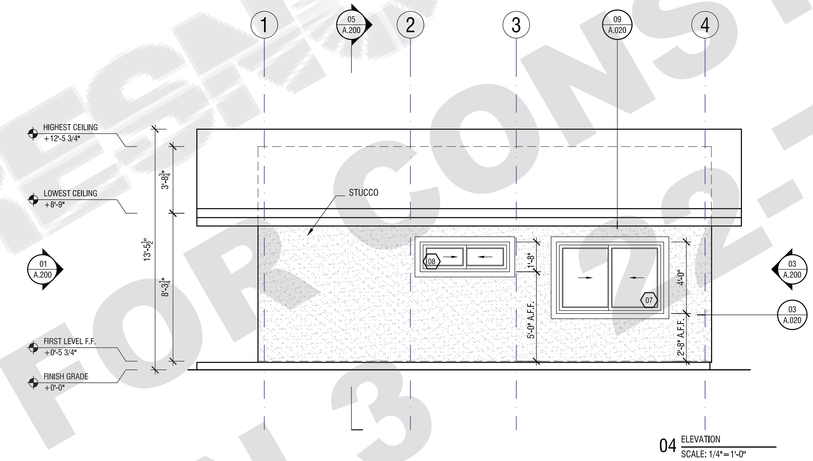

04 ELEVATION
SCALE: 1/4"=1'-0"

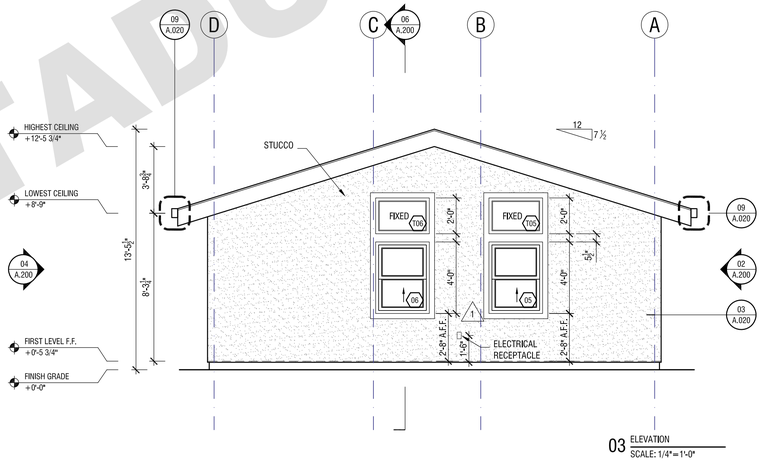

03 ELEVATION
SCALE: 1/4"=1'-0"

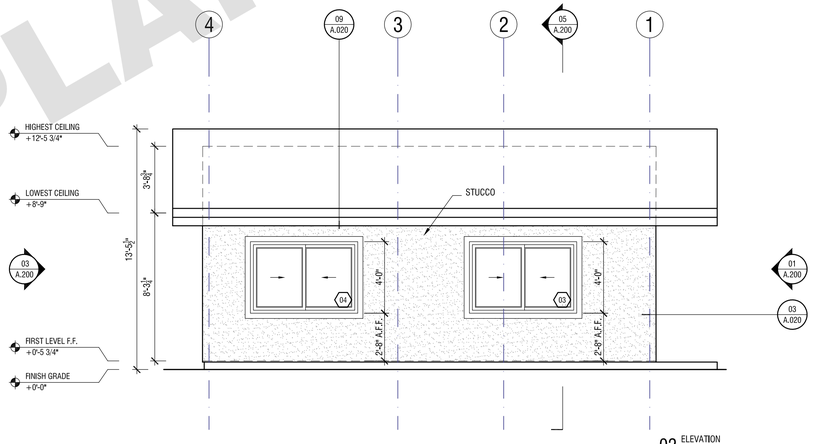

02 ELEVATION
SCALE: 1/4"=1'-0"

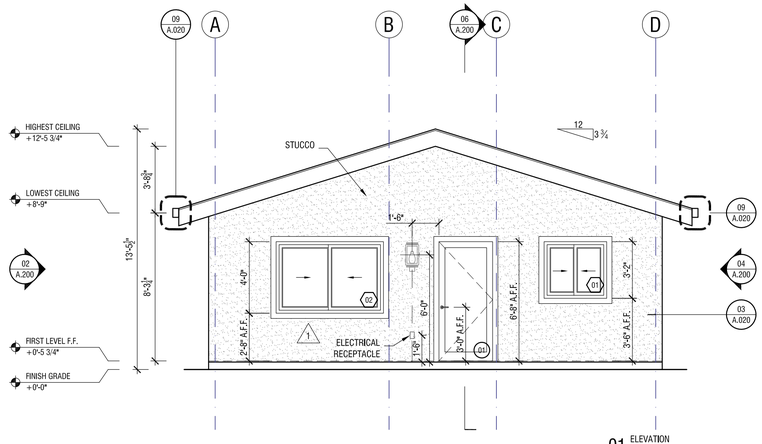

01 ELEVATION
SCALE: 1/4"=1'-0"

City of FRESNO
NOT FOR CONSTRUCTION
PLAN 3 22-TADU-0095

ANX
AARON NEUBERT ARCHITECTS

ADU PROGRAM

OWNER:

CITY OF FRESNO
PLANNING AND DEVELOPMENT DEPARTMENT
2600 FRESNO STREET, 3RD FLOOR
FRESNO, CA 93721

ARCHITECT:

AARON NEUBERT ARCHITECTS, INC.
2814 ROWENA AVENUE, SUITE ONE
LOS ANGELES, CALIFORNIA 90039
P. 323.953.4700 F. 323.953.4900

AARON NEUBERT CA# C-29005

STRUCTURAL ENGINEER:

NOUS ENGINEERING, INC.
600 WILSHIRE BOULEVARD, SUITE 760
LOS ANGELES, CALIFORNIA 90017
P. 213.627.6687

MEP ENGINEER:

INNODEZ DESIGN AND ENGINEERING
726 FOXBROUGH PLACE
PLEASANTON, CALIFORNIA 94566
P. 424.414.0997

REVISION: DATE: COMMENT:

ISSUE:

2 REVISION #2 06.03.22 PLAN CHECK CORRECTIONS

1 REVISION #1 04.04.22 PLAN CHECK CORRECTIONS

SEAL:

LICENSED ARCHITECT
JOSEPH A. NEUBERT
C-29005
05.31.23
RENEWAL DATE
STATE OF CALIFORNIA

Project No. 2104

ADU PROGRAM

CITY OF FRESNO
CALIFORNIA

DRAWING TITLE:

ADU 03 - GABLE
ELEVATIONS
SECTIONS

DATE: JUNE 3, 2022

SCALE: 1/4"=1'-0"

DRAWN BY:

© Aaron Neubert Architects, INC. 2022

A.200g

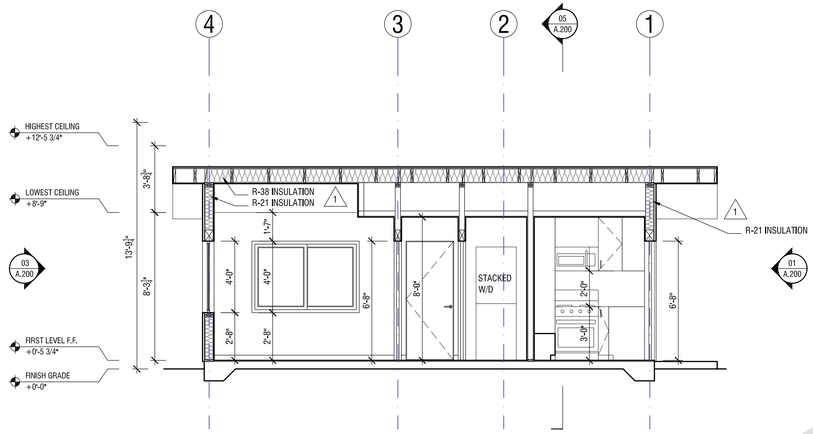

06 SECTION
SCALE: 1/4"=1'-0"

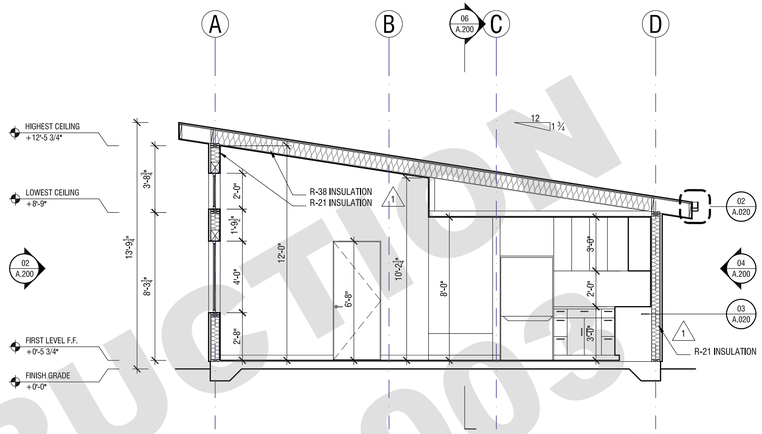

05 SECTION
SCALE: 1/4"=1'-0"

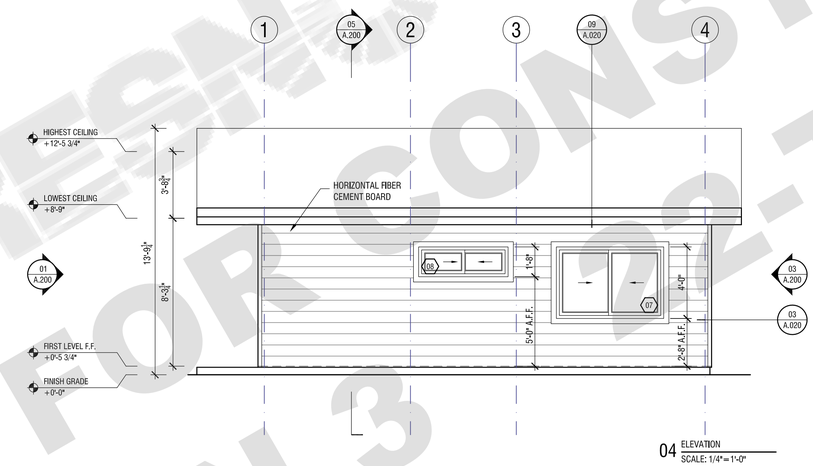

04 ELEVATION
SCALE: 1/4"=1'-0"

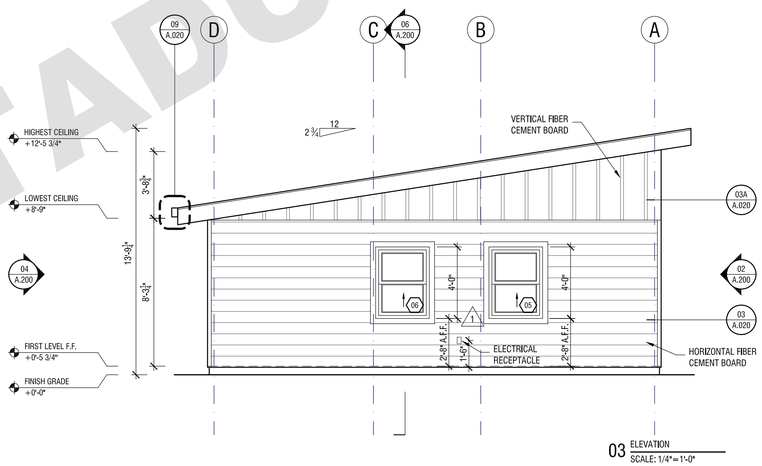

03 ELEVATION
SCALE: 1/4"=1'-0"

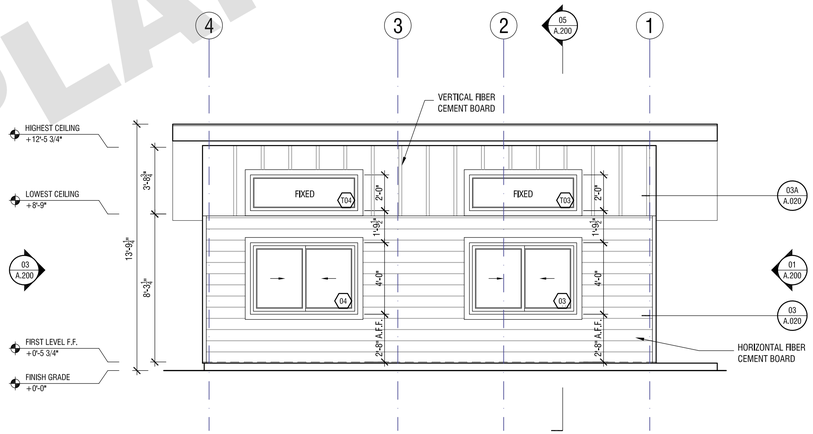

02 ELEVATION
SCALE: 1/4"=1'-0"

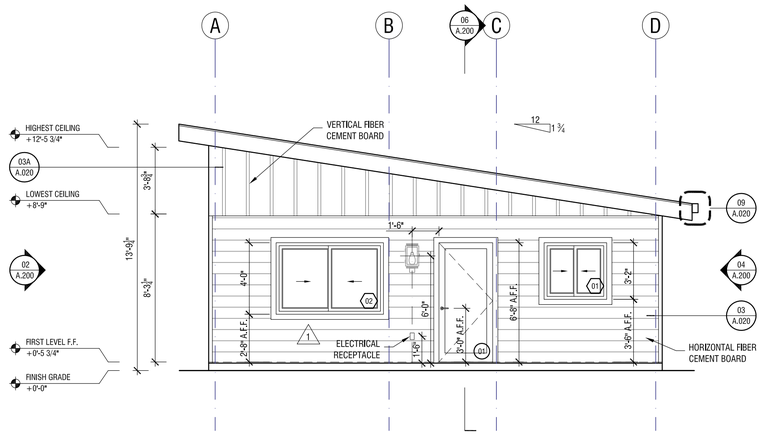

01 ELEVATION
SCALE: 1/4"=1'-0"

City of FRESNO
NOT FOR CONSTRUCTION
PLAN 3 22-TADU-0095

ANX
AARON NEUBERT ARCHITECTS

ADU PROGRAM

OWNER:
CITY OF FRESNO
PLANNING AND DEVELOPMENT DEPARTMENT
2600 FRESNO STREET, 3RD FLOOR
FRESNO, CA 93721

ARCHITECT:
AARON NEUBERT ARCHITECTS, INC.
2814 ROWENA AVENUE, SUITE ONE
LOS ANGELES, CALIFORNIA 90039
P. 323.953.4700 F. 323.953.4900

AARON NEUBERT CA# C-29005

STRUCTURAL ENGINEER:
NOUS ENGINEERING, INC.
600 WILSHIRE BOULEVARD, SUITE 760
LOS ANGELES, CALIFORNIA 90017
P. 213.627.6687

MEP ENGINEER:
INNODEZ DESIGN AND ENGINEERING
726 FOXBROUGH PLACE
PLEASANTON, CALIFORNIA 94566
P. 424.414.0997

REVISION: DATE: COMMENT:

ISSUE:

2 REVISION #2 06.03.22 PLAN CHECK CORRECTIONS

1 REVISION #1 04.04.22 PLAN CHECK CORRECTIONS

SEAL:



Project No. 2104

ADU PROGRAM
CITY OF FRESNO
CALIFORNIA

DRAWING TITLE:

ADU 03 - CONTEMPORARY
ELEVATIONS
SECTIONS

DATE: JUNE 3, 2022

SCALE: 1/4"=1'-0"

DRAWN BY:

© Aaron Neubert Architects, INC. 2022

A.200s

MATERIALS AND PAINT SCHEDULE

ID TAG	TYPE	DESCRIPTION	LOCATION	MANUFACTURER	MODEL #	SPECIES / STAIN	COLOR / FINISH	SIZE	SOURCE	COMMENTS / NOTES
PT-01	PAINT EXTERIOR		INTERIOR							
PT-02	PAINT INTERIOR		INTERIOR							
PT-03	PAINT INTERIOR		INTERIOR							
FW-01	FLOOR		LIVING ROOM, KITCHEN, BEDROOMS, HALLWAY, CLOSETS							
FT-01	FLOOR TILE		BATHROOM							
FT-02	FLOOR TILE		BATHROOM							
BW-01	BASEBOARD		LIVING ROOM, KITCHEN, BEDROOMS, HALLWAY, CLOSETS							
CT-01	COUNTERTOP		KITCHEN							
CT-02	COUNTERTOP		BATH							

PLUMBING FIXTURE SCHEDULE

UNIT	QTY	TYPE	LOCATION	MANUFACTURER	MODEL #	COLOR/FINISH	COMMENTS
P1	1	KITCHEN SINK	KITCHEN				
P2	1	KITCHEN FAUCET	KITCHEN				
P3	1	GARBAGE DISPOSAL W/CORD	KITCHEN				
P4	1	LAVATORY SINK	BATH				
P5	1	SINK FAUCET	BATH				
P6	1	TOILET	BATH				
P7	1	TOILET PAPER HOLDER	BATH				
P8	1	24" TOWEL BAR	BATH				
P9	1	SINGLE ROBE HOOK	BATH				
P10	1	SHOWERHEAD	BATH				
P11	2	THERMO. VALVE TRIM	BATH				
P12	1	BATHTUB	BATH				
P13	1	BATHTUB SPOUT	BATH				
P14	1	BATHTUB DOOR TOWEL RACK	BATH				

APPLIANCE SCHEDULE

UNIT	QTY	TYPE	LOCATION	MANUFACTURER	MODEL #	COLOR/FINISH	COMMENTS
A1	1	36" REFRIDGERATOR	KITCHEN				
A2	1	30" STOVE	KITCHEN				
A3	1	30" MICROWAVE - HOOD	KITCHEN				

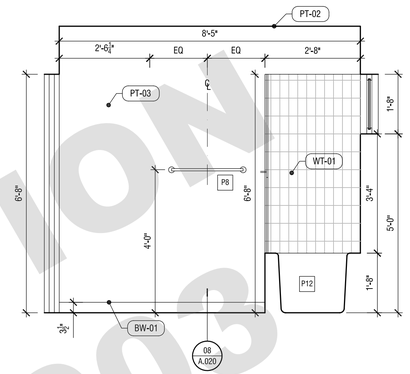

09 BATHROOM ELEVATION
SCALE: 1/2"=1'-0"

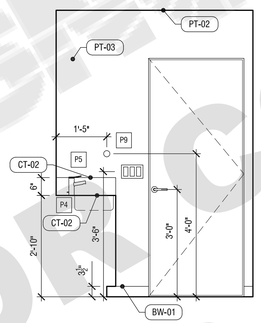

08 BATHROOM ELEVATION
SCALE: 1/2"=1'-0"

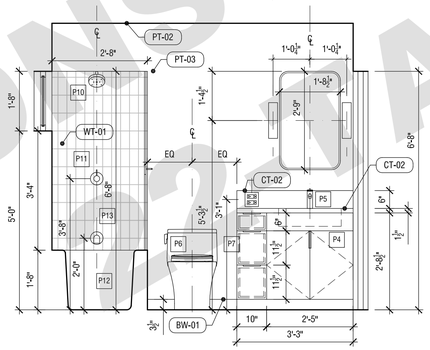

07 BATHROOM ELEVATION
SCALE: 1/2"=1'-0"

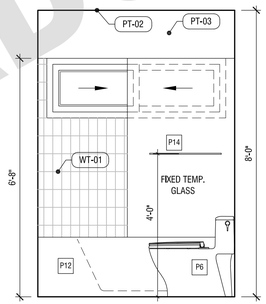

06 BATHROOM ELEVATION
SCALE: 1/2"=1'-0"

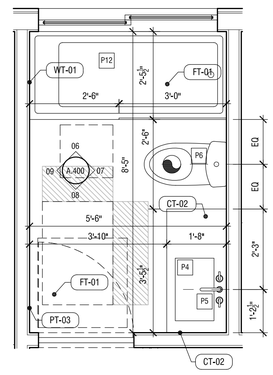

05 BATHROOM PLAN
SCALE: 1/2"=1'-0"

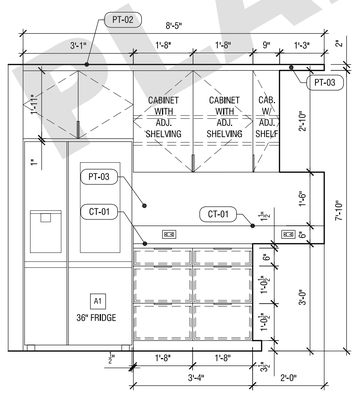

04 KITCHEN ELEVATION
SCALE: 1/2"=1'-0"

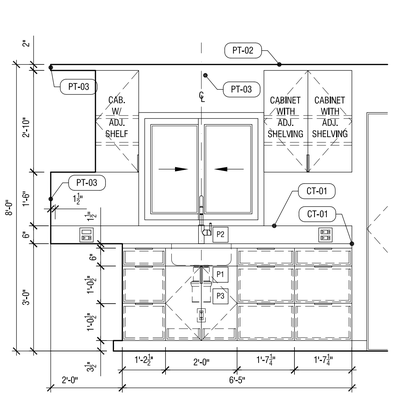

03 KITCHEN ELEVATION
SCALE: 1/2"=1'-0"

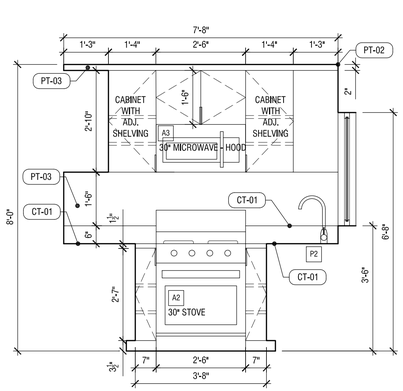

02 KITCHEN ELEVATION
SCALE: 1/2"=1'-0"

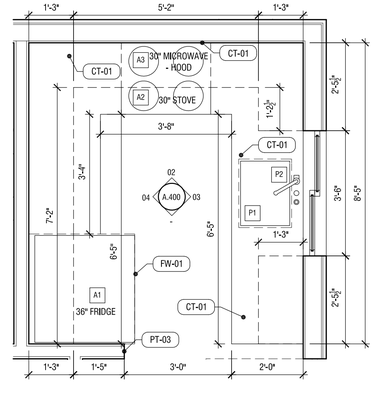

01 KITCHEN PLAN
SCALE: 1/2"=1'-0"

CITY OF FRESNO
NOT FOR CONSTRUCTION
PLAN CHECK
ADU-003

ANX

AARON NEUBERT ARCHITECTS

ADU PROGRAM

OWNER:

CITY OF FRESNO
PLANNING AND DEVELOPMENT DEPARTMENT
2600 FRESNO STREET, 3RD FLOOR
FRESNO, CA 93721

ARCHITECT:

AARON NEUBERT ARCHITECTS, INC.
2814 ROWENA AVENUE, SUITE ONE
LOS ANGELES, CALIFORNIA 90039
P. 323.953.4700 F. 323.953.4900

AARON NEUBERT CA# C-29005

STRUCTURAL ENGINEER:

NOUS ENGINEERING, INC.
600 WILSHIRE BOULEVARD, SUITE 760
LOS ANGELES, CALIFORNIA 90017
P. 213.627.6687

MEP ENGINEER:

INNODEZ DESIGN AND ENGINEERING
726 FOXBROUGH PLACE
PLEASANTON, CALIFORNIA 94566
P. 424.414.0997

REVISION: DATE: COMMENT:

ISSUE:

2 REVISION #2 06.03.22 PLAN CHECK CORRECTIONS

1 REVISION #1 04.04.22 PLAN CHECK CORRECTIONS

SEAL:

LICENSED ARCHITECT
AARON NEUBERT
C-29005
RENEWAL DATE 08.31.23
STATE OF CALIFORNIA

Project No. 2104

ADU PROGRAM
CITY OF FRESNO
CALIFORNIA

DRAWING TITLE:

ADU 03
INTERIOR ELEVATIONS

DATE: JUNE 3, 2022
SCALE: 1/2"=1'-0"
DRAWN BY:

© Aaron Neubert Architects, INC. 2022

A.400

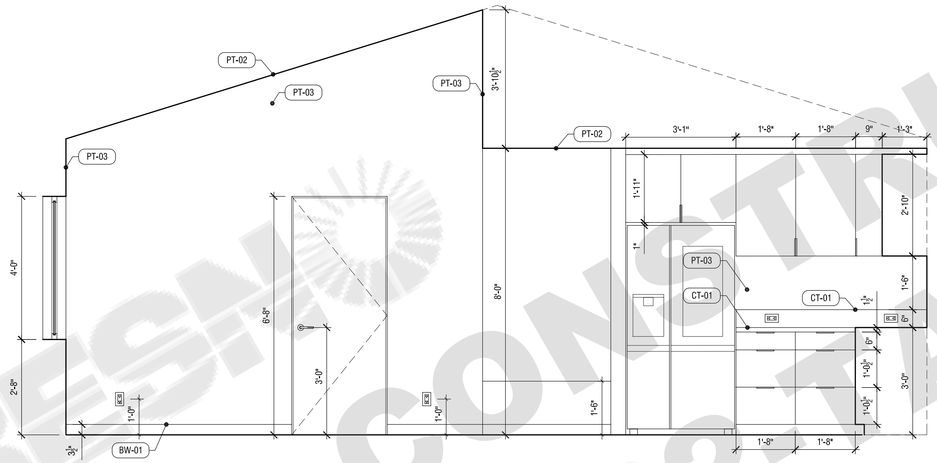

04 LIVING ROOM ELEVATION
SCALE: 1/2"=1'-0"

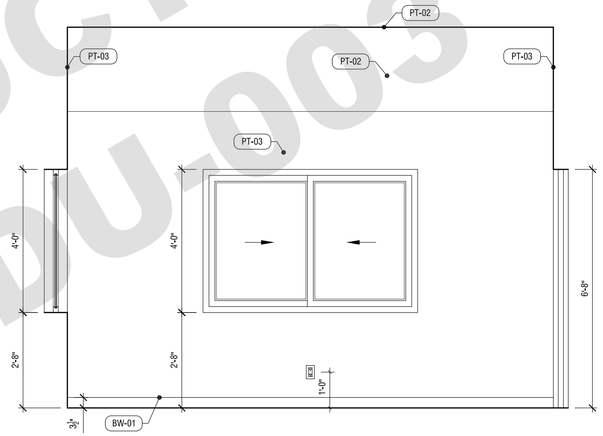

03 LIVING ROOM ELEVATION
SCALE: 1/2"=1'-0"

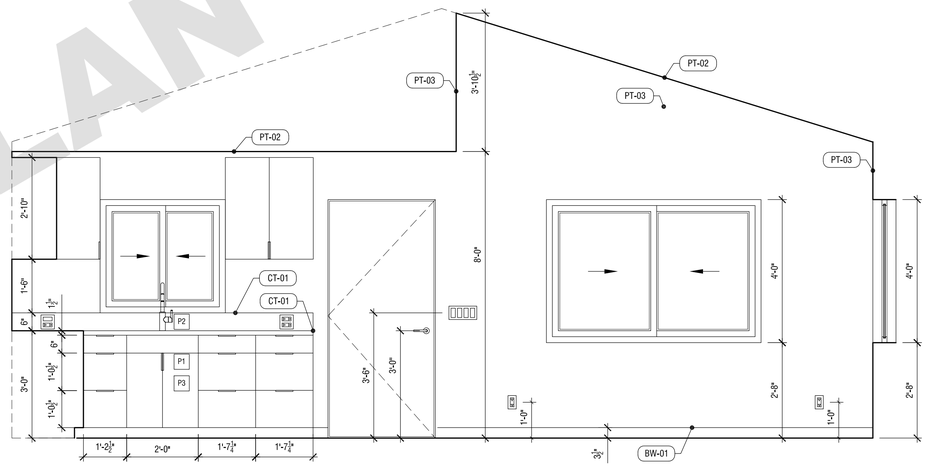

02 LIVING ROOM ELEVATION
SCALE: 1/2"=1'-0"

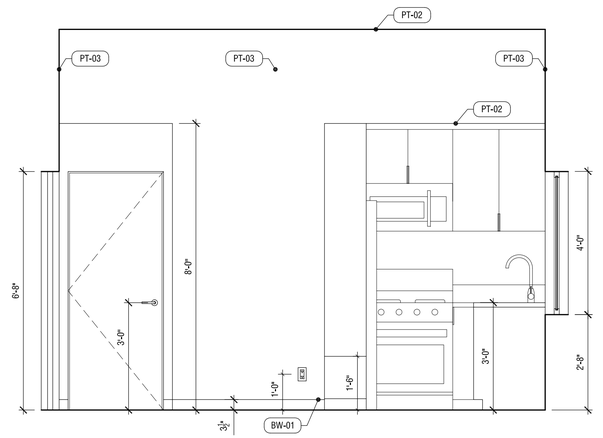

01 LIVING ROOM ELEVATION
SCALE: 1/2"=1'-0"

CITY OF FRESNO
NOT FOR CONSTRUCTION
PLAN 3 22 ADU-003

ANX

AARON NEUBERT ARCHITECTS

ADU PROGRAM

OWNER:

CITY OF FRESNO
PLANNING AND DEVELOPMENT DEPARTMENT
2600 FRESNO STREET, 3RD FLOOR
FRESNO, CA 93721

ARCHITECT:

AARON NEUBERT ARCHITECTS, INC.
2814 ROWENA AVENUE, SUITE ONE
LOS ANGELES, CALIFORNIA 90039
P. 323.953.4700 F. 323.953.4900

AARON NEUBERT CA# C-29005

STRUCTURAL ENGINEER:

NOUS ENGINEERING, INC.
600 WILSHIRE BOULEVARD, SUITE 760
LOS ANGELES, CALIFORNIA 90017
P. 213.627.6687

MEP ENGINEER:

INNODEZ DESIGN AND ENGINEERING
726 FOXBOROUGH PLACE
PLEASANTON, CALIFORNIA 94566
P. 424.414.0997

REVISION: DATE: COMMENT:

ISSUE:

2 REVISION #2 06.03.22 PLAN CHECK CORRECTIONS

1 REVISION #1 04.04.22 PLAN CHECK CORRECTIONS

SEAL:

LICENSED ARCHITECT
ANTHONY C. LAU
C-29005
05.31.23
RENEWAL DATE
STATE OF CALIFORNIA

Project No. 2104

ADU PROGRAM

CITY OF FRESNO
CALIFORNIA

DRAWING TITLE:

ADU 03 - CRAFTSMAN
INTERIOR ELEVATIONS

DATE: JUNE 3, 2022

SCALE: 1/2=1'-0"

DRAWN BY:

© Aaron Neubert Architects, INC. 2022

A.401c

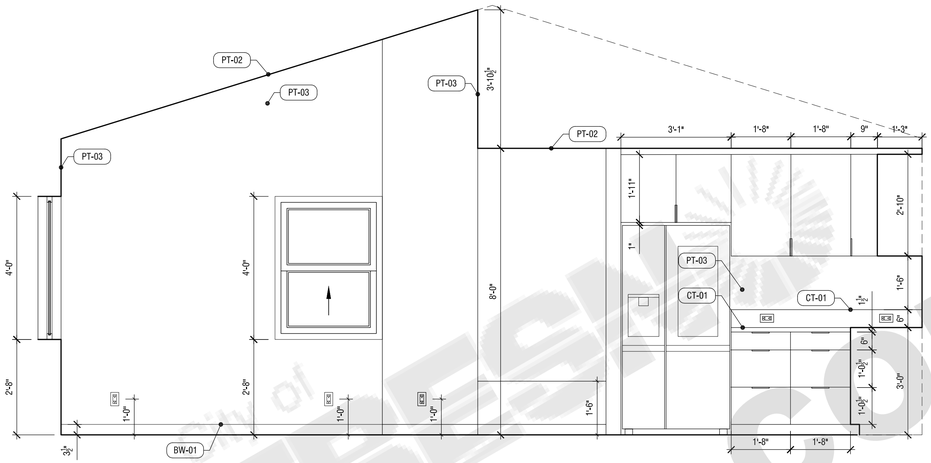

04 LIVING ROOM ELEVATION
SCALE: 1/2"=1'-0"

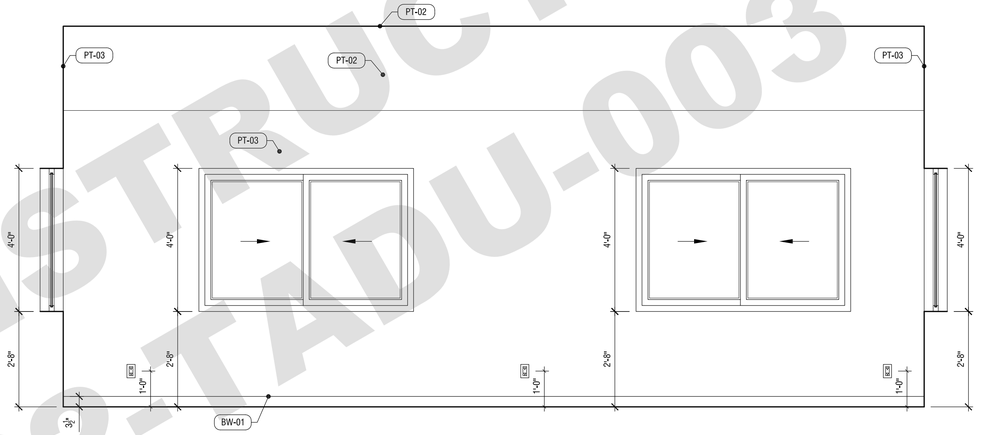

03 LIVING ROOM ELEVATION
SCALE: 1/2"=1'-0"

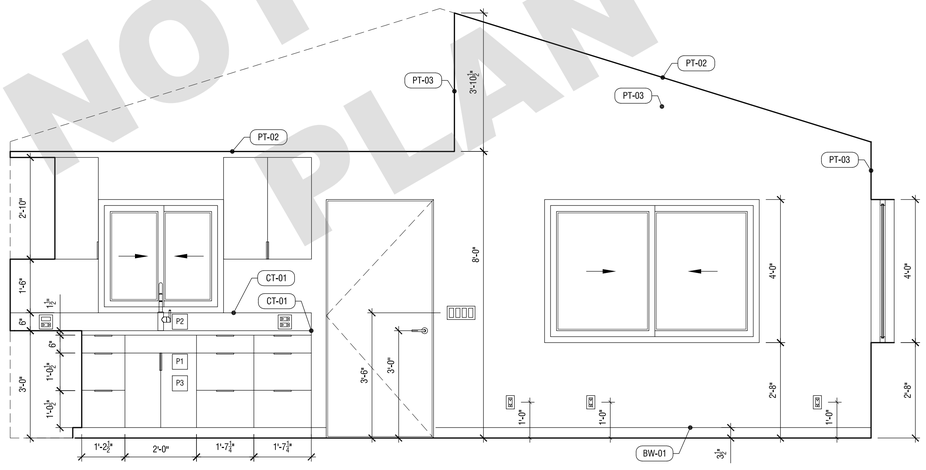

02 LIVING ROOM ELEVATION
SCALE: 1/2"=1'-0"

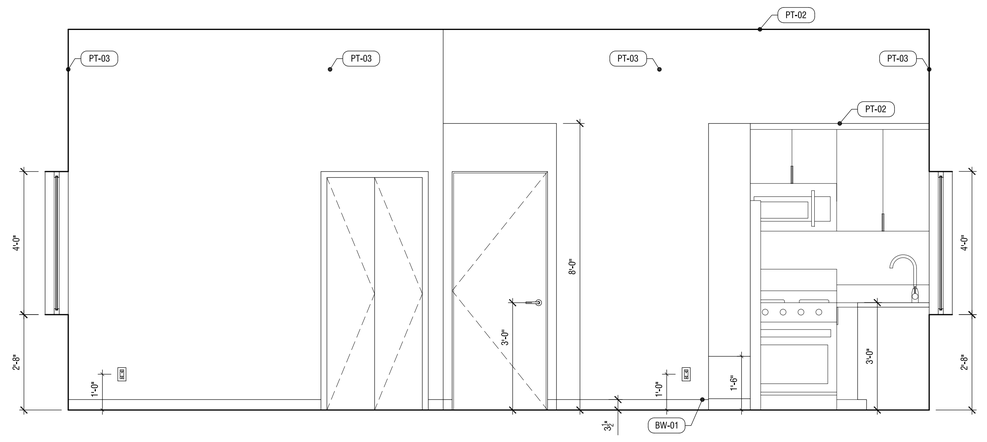

01 LIVING ROOM ELEVATION
SCALE: 1/2"=1'-0"

FRESNO
NOT FOR CONSTRUCTION
PLAN 3
22-TADU-003

ANX

AARON NEUBERT ARCHITECTS

ADU PROGRAM

OWNER:

CITY OF FRESNO
PLANNING AND DEVELOPMENT DEPARTMENT
2600 FRESNO STREET, 3RD FLOOR
FRESNO, CA 93721

ARCHITECT:

AARON NEUBERT ARCHITECTS, INC.
2814 ROWENA AVENUE, SUITE ONE
LOS ANGELES, CALIFORNIA 90039
P. 323.953.4700 F. 323.953.4900

AARON NEUBERT CA# C-29005

STRUCTURAL ENGINEER:

NOUS ENGINEERING, INC.
600 WILSHIRE BOULEVARD, SUITE 760
LOS ANGELES, CALIFORNIA 90017
P. 213.627.6687

MEP ENGINEER:

INNODEZ DESIGN AND ENGINEERING
726 FOXBROUGH PLACE
PLEASANTON, CALIFORNIA 94566
P. 424.414.0997

REVISION: DATE: COMMENT:

ISSUE:

2 REVISION #2 06.03.22 PLAN CHECK CORRECTIONS

1 REVISION #1 04.04.22 PLAN CHECK CORRECTIONS

SEAL:

LICENSED ARCHITECT
AARON NEUBERT
C-29005
05.31.23
RENEWAL DATE
STATE OF CALIFORNIA

Project No. 2104

ADU PROGRAM

CITY OF FRESNO
CALIFORNIA

DRAWING TITLE:

ADU 03 ALT - CRAFTSMAN INTERIOR ELEVATIONS

DATE: JUNE 3, 2022

SCALE: 1/2=1'-0"

DRAWN BY:

A.401c_alt

© Aaron Neubert Architects, INC. 2022

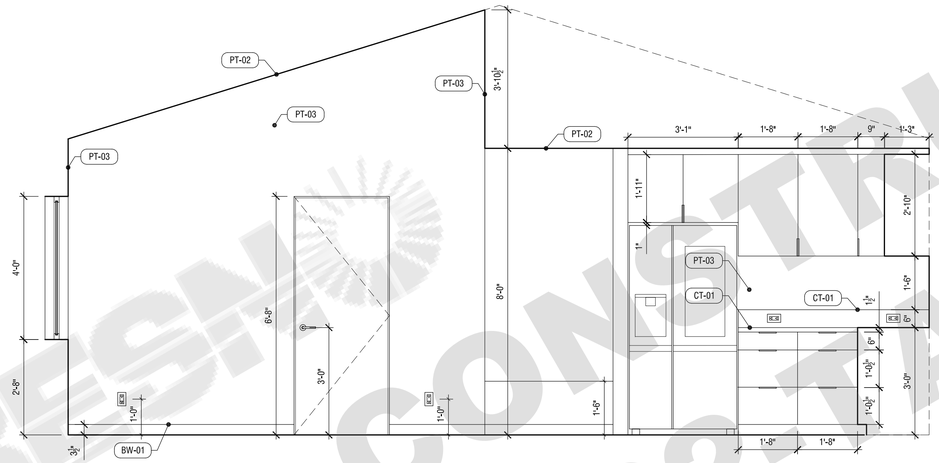

04 LIVING ROOM ELEVATION
SCALE: 1/2"=1'-0"

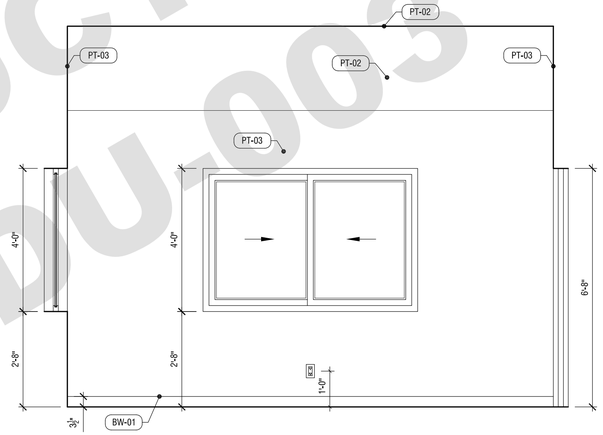

03 LIVING ROOM ELEVATION
SCALE: 1/2"=1'-0"

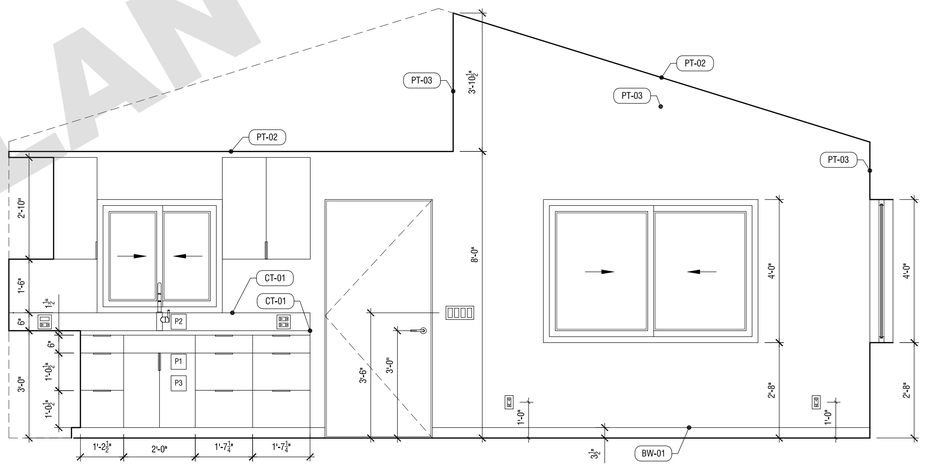

02 LIVING ROOM ELEVATION
SCALE: 1/2"=1'-0"

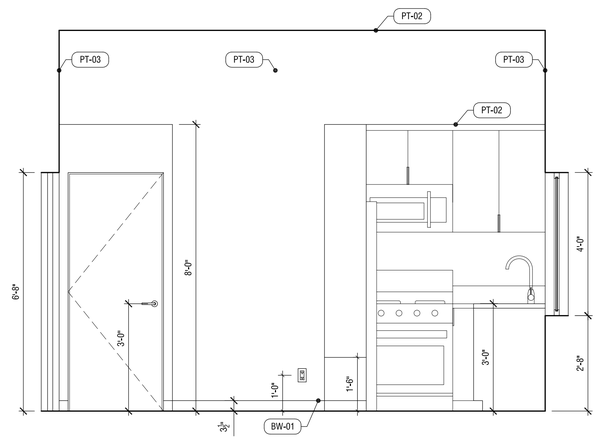

01 LIVING ROOM ELEVATION
SCALE: 1/2"=1'-0"

City of FRESNO
NOT FOR CONSTRUCTION
PLAN 3 22 ADU-003

ANX

AARON NEUBERT ARCHITECTS

ADU PROGRAM

OWNER:

CITY OF FRESNO
PLANNING AND DEVELOPMENT DEPARTMENT
2600 FRESNO STREET, 3RD FLOOR
FRESNO, CA 93721

ARCHITECT:

AARON NEUBERT ARCHITECTS, INC.
2814 ROWENA AVENUE, SUITE ONE
LOS ANGELES, CALIFORNIA 90039
P. 323.953.4700 F. 323.953.4900

AARON NEUBERT CA# C-29005

STRUCTURAL ENGINEER:

NOUS ENGINEERING, INC.
600 WILSHIRE BOULEVARD, SUITE 760
LOS ANGELES, CALIFORNIA 90017
P. 213.627.6687

MEP ENGINEER:

INNODEZ DESIGN AND ENGINEERING
726 FOXBOROUGH PLACE
PLEASANTON, CALIFORNIA 94566
P. 424.414.0997

REVISION: DATE: COMMENT:

ISSUE:

2 REVISION #2 06.03.22 PLAN CHECK CORRECTIONS
1 REVISION #1 04.04.22 PLAN CHECK CORRECTIONS

SEAL:

LICENSED ARCHITECT
REGISTERED PROFESSIONAL ENGINEER
C-29005
05.31.23
RENEWAL DATE
STATE OF CALIFORNIA

Project No. 2104

ADU PROGRAM
CITY OF FRESNO
CALIFORNIA

DRAWING TITLE:

ADU 03 - GABLE
INTERIOR ELEVATIONS

DATE: JUNE 3, 2022
SCALE: 1/2=1'-0"
DRAWN BY:

© Aaron Neubert Architects, INC. 2022

A.401g

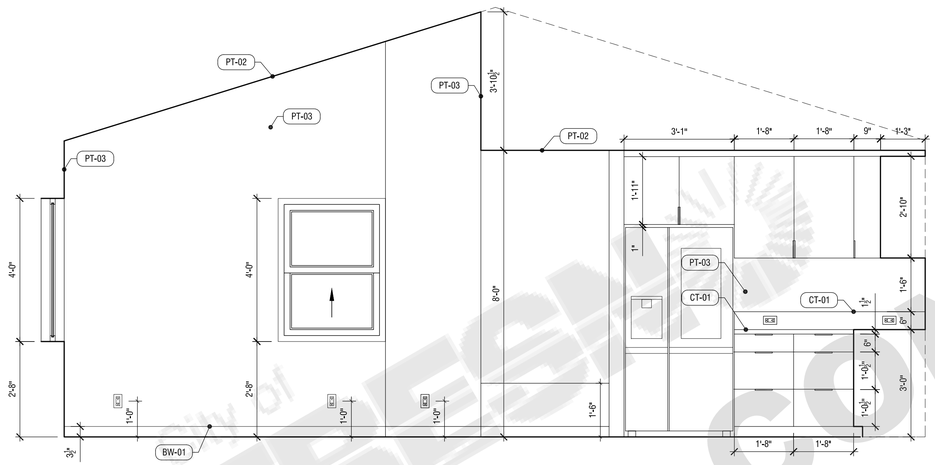

04 LIVING ROOM ELEVATION
SCALE: 1/2"=1'-0"

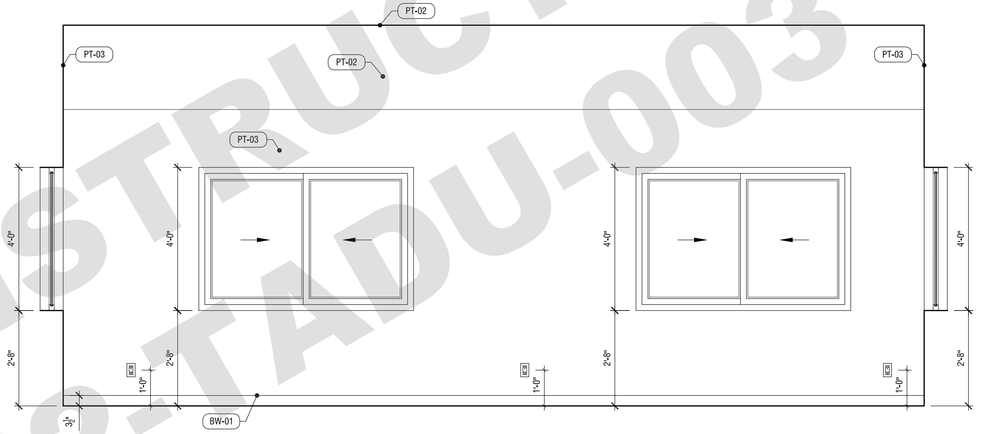

03 LIVING ROOM ELEVATION
SCALE: 1/2"=1'-0"

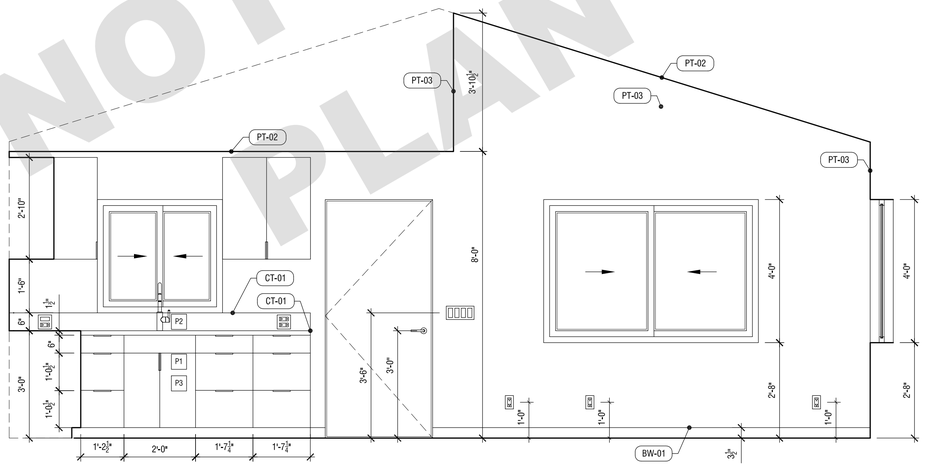

02 LIVING ROOM ELEVATION
SCALE: 1/2"=1'-0"

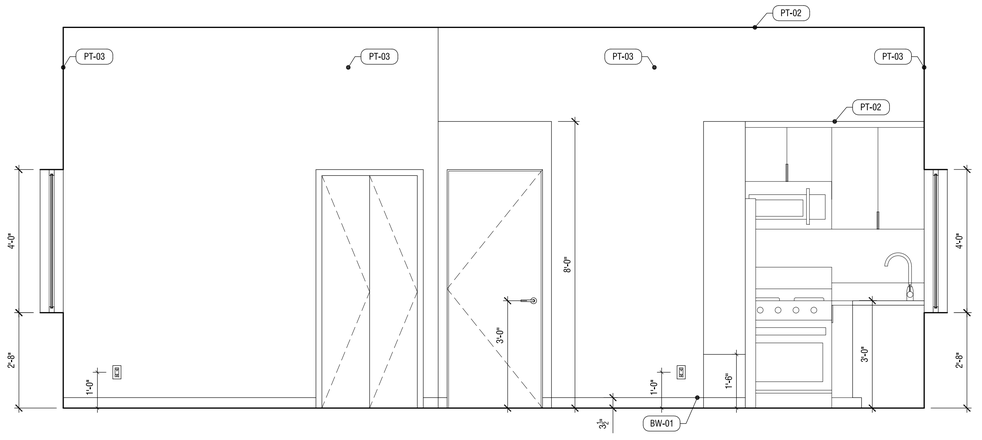

01 LIVING ROOM ELEVATION
SCALE: 1/2"=1'-0"

FRESNO
NOT FOR CONSTRUCTION
PLAN 3 22-TADU-003

ANX

AARON NEUBERT ARCHITECTS

ADU PROGRAM

OWNER:

CITY OF FRESNO
PLANNING AND DEVELOPMENT DEPARTMENT
2600 FRESNO STREET, 3RD FLOOR
FRESNO, CA 93721

ARCHITECT:

AARON NEUBERT ARCHITECTS, INC.
2814 ROWENA AVENUE, SUITE ONE
LOS ANGELES, CALIFORNIA 90039
P. 323.953.4700 F. 323.953.4900

AARON NEUBERT CA# C-29005

STRUCTURAL ENGINEER:

NOUS ENGINEERING, INC.
600 WILSHIRE BOULEVARD, SUITE 760
LOS ANGELES, CALIFORNIA 90017
P. 213.627.6687

MEP ENGINEER:

INNODEZ DESIGN AND ENGINEERING
726 FOXBOROUGH PLACE
PLEASANTON, CALIFORNIA 94566
P. 424.414.0997

REVISION:	DATE:	COMMENT:
ISSUE:		
2	REVISION #2 06.03.22	PLAN CHECK CORRECTIONS
1	REVISION #1 04.04.22	PLAN CHECK CORRECTIONS

SEAL:

LICENSED ARCHITECT
AARON NEUBERT
C-29005
05.31.23
RENEWAL DATE
STATE OF CALIFORNIA

Project No. 2104

ADU PROGRAM

CITY OF FRESNO
CALIFORNIA

DRAWING TITLE:

ADU 03 ALT - GABLE INTERIOR ELEVATIONS

DATE: JUNE 3, 2022
SCALE: 1/2=1'-0"
DRAWN BY:

A.401g_alt

© Aaron Neubert Architects, INC. 2022

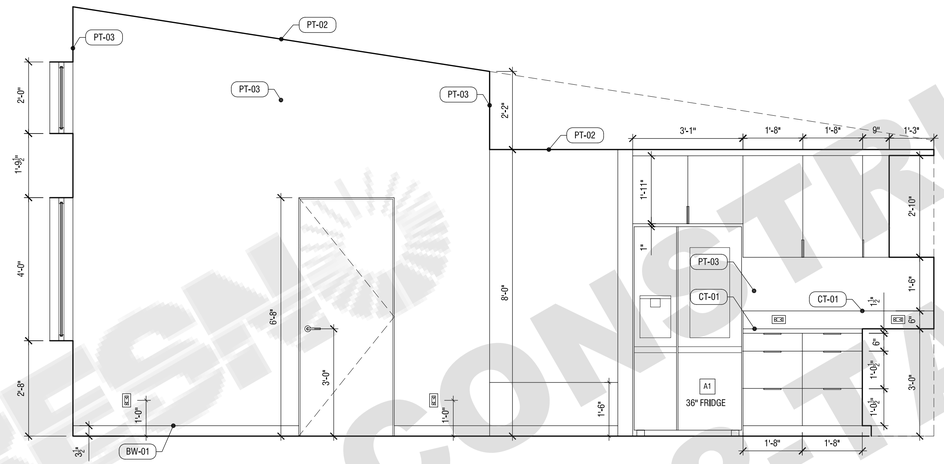

04 LIVING ROOM ELEVATION
SCALE: 1/2"=1'-0"

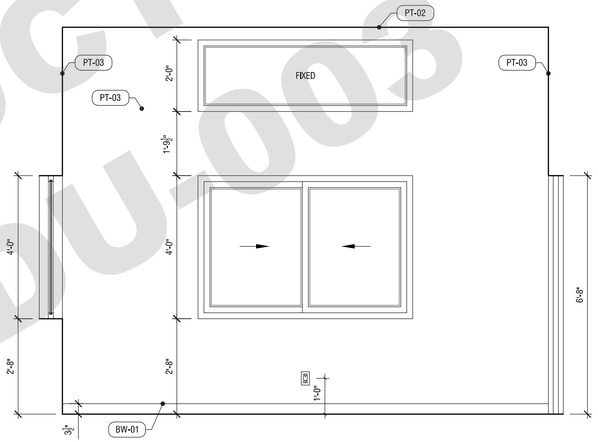

03 LIVING ROOM ELEVATION
SCALE: 1/2"=1'-0"

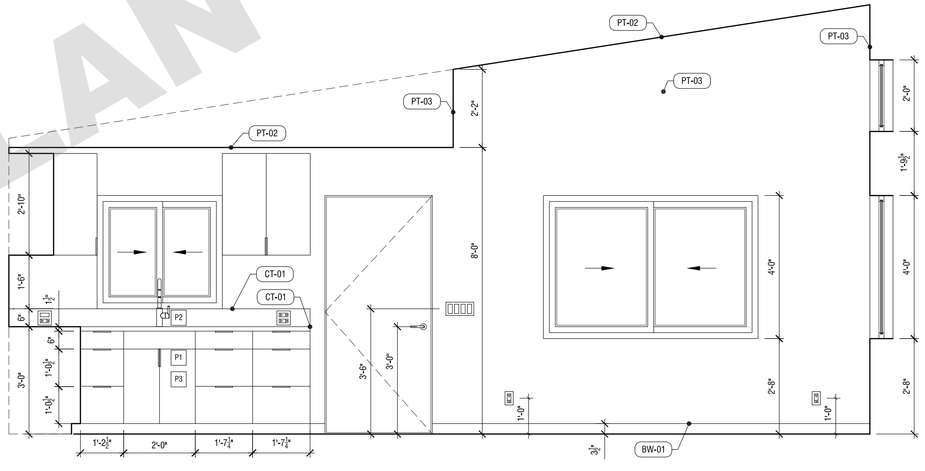

02 LIVING ROOM ELEVATION
SCALE: 1/2"=1'-0"

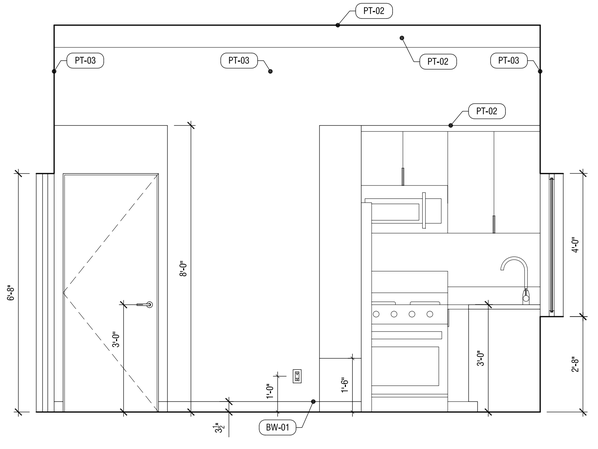

01 LIVING ROOM ELEVATION
SCALE: 1/2"=1'-0"

CITY OF FRESNO
NOT FOR CONSTRUCTION
PLAN 3
22-ADU-003

ANX

AARON NEUBERT ARCHITECTS

ADU PROGRAM

OWNER:

CITY OF FRESNO
PLANNING AND DEVELOPMENT DEPARTMENT
2600 FRESNO STREET, 3RD FLOOR
FRESNO, CA 93721

ARCHITECT:

AARON NEUBERT ARCHITECTS, INC.
2814 ROWENA AVENUE, SUITE ONE
LOS ANGELES, CALIFORNIA 90039
P. 323.953.4700 F. 323.953.4900

AARON NEUBERT CA# C-29005

STRUCTURAL ENGINEER:

NOUS ENGINEERING, INC.
600 WILSHIRE BOULEVARD, SUITE 760
LOS ANGELES, CALIFORNIA 90017
P. 213.627.6687

MEP ENGINEER:

INNODEZ DESIGN AND ENGINEERING
726 FOXBOROUGH PLACE
PLEASANTON, CALIFORNIA 94566
P. 424.414.0997

REVISION: DATE: COMMENT:

ISSUE:

2 REVISION #2 06.03.22 PLAN CHECK CORRECTIONS
1 REVISION #1 04.04.22 PLAN CHECK CORRECTIONS

SEAL:

LICENSED ARCHITECT
AARON NEUBERT
C-29005
06.30.23
RENEWAL DATE
STATE OF CALIFORNIA

Project No. 2104

ADU PROGRAM
CITY OF FRESNO
CALIFORNIA

DRAWING TITLE:

ADU 03 - CONTEMPOARARY
INTERIOR ELEVATIONS

DATE: JUNE 3, 2022
SCALE: 1/2=1'-0"
DRAWN BY:

© Aaron Neubert Architects, INC. 2022

A.401s

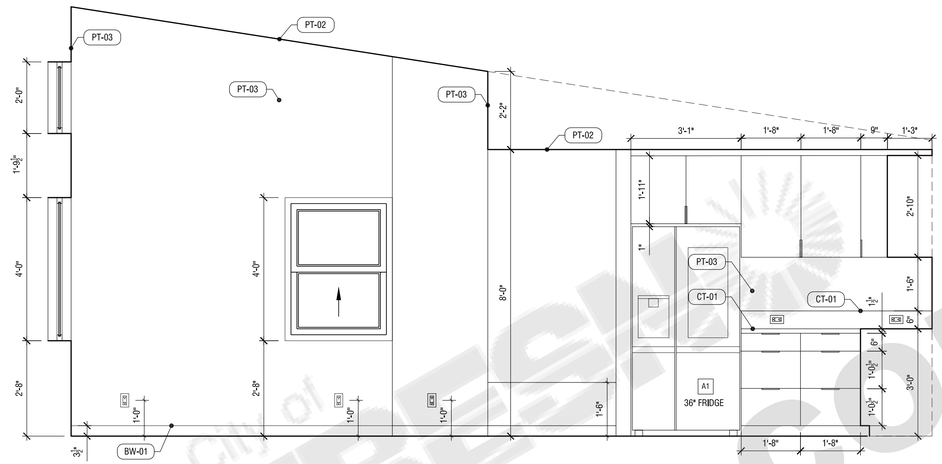

04 LIVING ROOM ELEVATION
SCALE: 1/2"=1'-0"

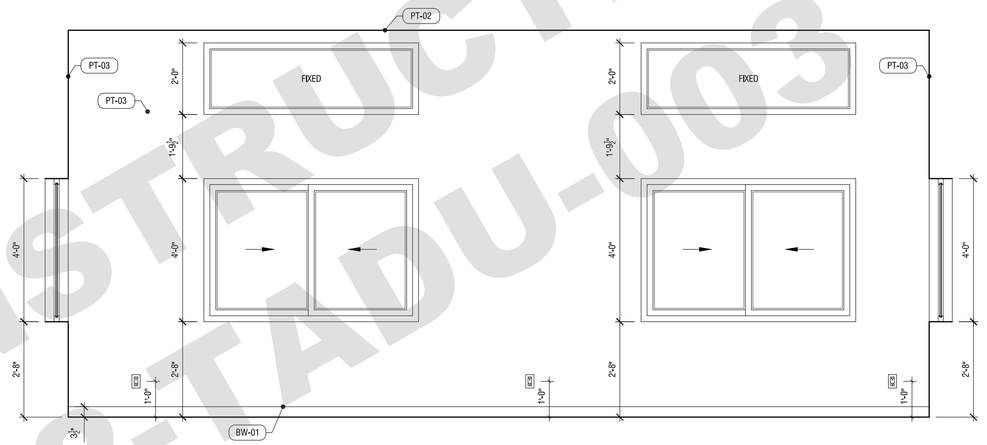

03 LIVING ROOM ELEVATION
SCALE: 1/2"=1'-0"

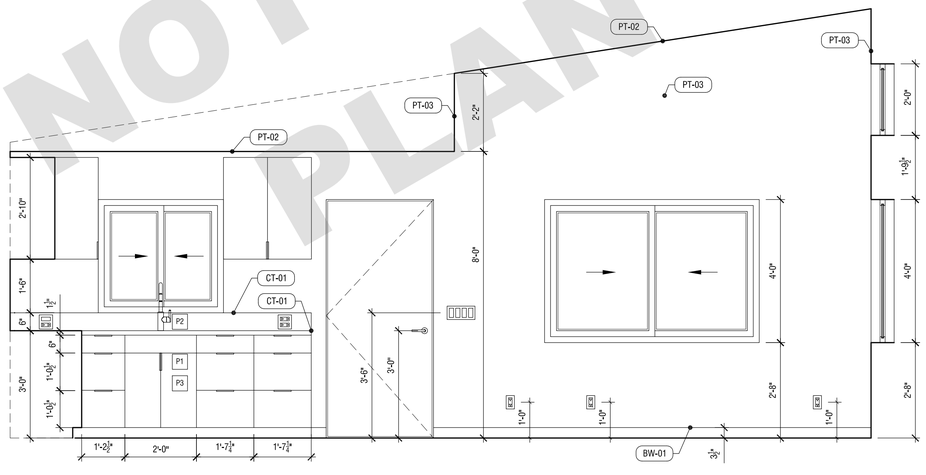

02 LIVING ROOM ELEVATION
SCALE: 1/2"=1'-0"

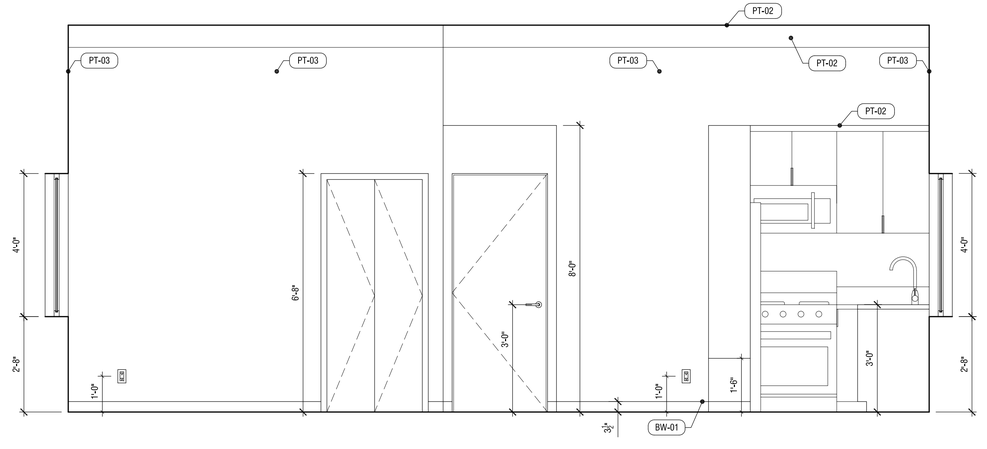

01 LIVING ROOM ELEVATION
SCALE: 1/2"=1'-0"

City of FRESNO
NOT FOR CONSTRUCTION
PLAN 3
22-TADU-003

ANX

AARON NEUBERT ARCHITECTS

ADU PROGRAM

OWNER:

CITY OF FRESNO
PLANNING AND DEVELOPMENT DEPARTMENT
2600 FRESNO STREET, 3RD FLOOR
FRESNO, CA 93721

ARCHITECT:

AARON NEUBERT ARCHITECTS, INC.
2814 ROWENA AVENUE, SUITE ONE
LOS ANGELES, CALIFORNIA 90039
P. 323.953.4700 F. 323.953.4900

AARON NEUBERT CA# C-29005

STRUCTURAL ENGINEER:

NOUS ENGINEERING, INC.
600 WILSHIRE BOULEVARD, SUITE 760
LOS ANGELES, CALIFORNIA 90017
P. 213.627.6687

MEP ENGINEER:

INNODEZ DESIGN AND ENGINEERING
726 FOXBROUGH PLACE
PLEASANTON, CALIFORNIA 94566
P. 424.414.0997

REVISION: DATE: COMMENT:

ISSUE:

2 REVISION #2 06.03.22 PLAN CHECK CORRECTIONS

1 REVISION #1 04.04.22 PLAN CHECK CORRECTIONS

SEAL:

LICENSED ARCHITECT
AARON NEUBERT
C-29005
06.30.23
RENEWAL DATE
STATE OF CALIFORNIA

Project No. 2104

ADU PROGRAM
CITY OF FRESNO
CALIFORNIA

DRAWING TITLE:

ADU 03 ALT - CONTEMPORARY
INTERIOR ELEVATIONS

DATE: JUNE 3, 2022

SCALE: 1/2"=1'-0"

DRAWN BY:

A.401s_alt

© Aaron Neubert Architects, INC. 2022

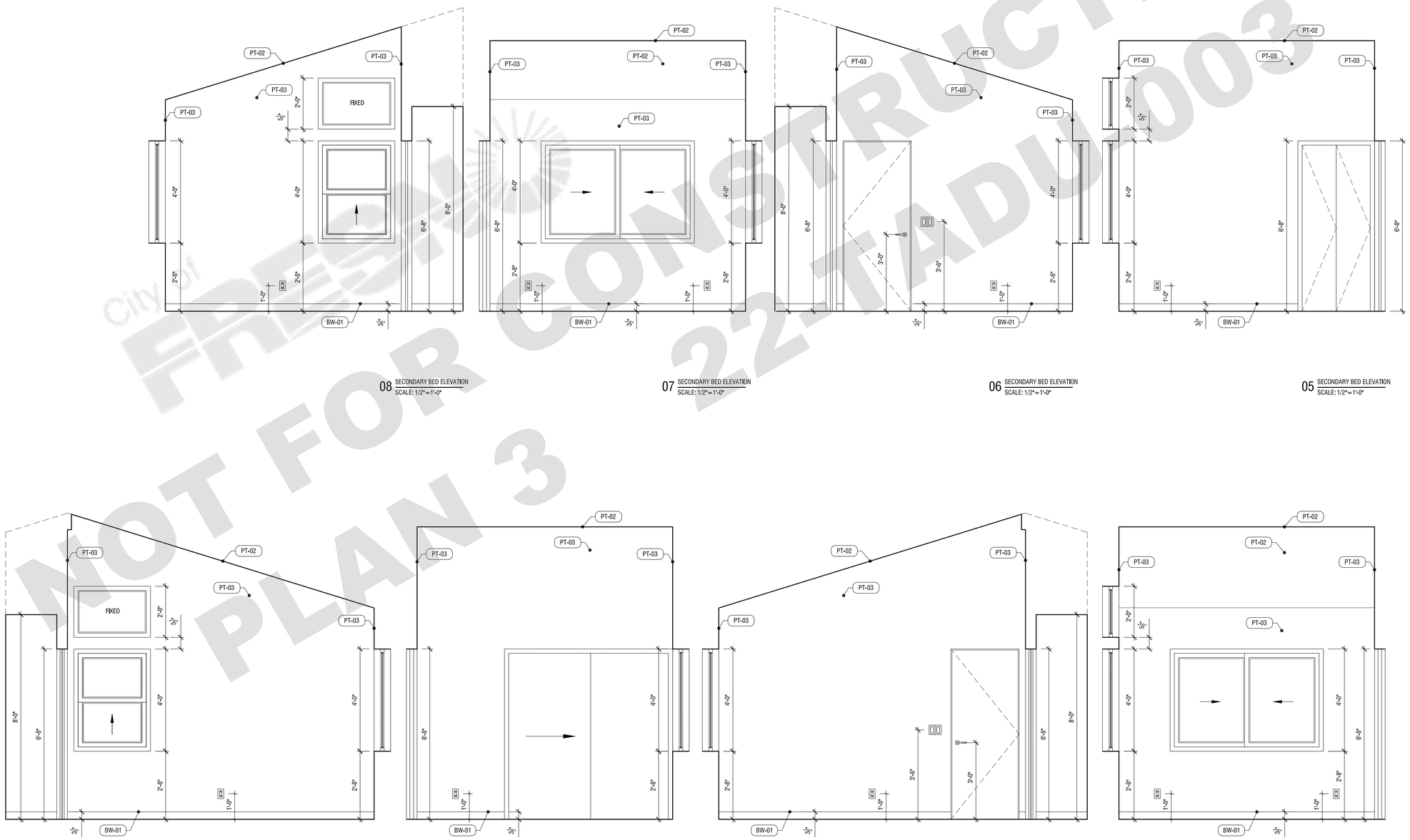

08 SECONDARY BED ELEVATION
SCALE: 1/2"=1'-0"

07 SECONDARY BED ELEVATION
SCALE: 1/2"=1'-0"

06 SECONDARY BED ELEVATION
SCALE: 1/2"=1'-0"

05 SECONDARY BED ELEVATION
SCALE: 1/2"=1'-0"

04 PRIMARY BED ELEVATION
SCALE: 1/2"=1'-0"

03 PRIMARY BED ELEVATION
SCALE: 1/2"=1'-0"

02 PRIMARY BED ELEVATION
SCALE: 1/2"=1'-0"

01 PRIMARY BED ELEVATION
SCALE: 1/2"=1'-0"

City of FRESNO
NOT FOR CONSTRUCTION
PLAN 3
22-TADU-003

ANX

AARON NEUBERT ARCHITECTS

ADU PROGRAM

OWNER:

CITY OF FRESNO
PLANNING AND DEVELOPMENT DEPARTMENT
2600 FRESNO STREET, 3RD FLOOR
FRESNO, CA 93721

ARCHITECT:

AARON NEUBERT ARCHITECTS, INC.
2814 ROWENA AVENUE, SUITE ONE
LOS ANGELES, CALIFORNIA 90039
P. 323.953.4700 F. 323.953.4900

AARON NEUBERT CA# C-29005

STRUCTURAL ENGINEER:

NOUS ENGINEERING, INC.
600 WILSHIRE BOULEVARD, SUITE 760
LOS ANGELES, CALIFORNIA 90017
P. 213.627.6687

MEP ENGINEER:

INNODEZ DESIGN AND ENGINEERING
726 FOXBROUGH PLACE
PLEASANTON, CALIFORNIA 94566
P. 424.414.0997

REVISION: DATE: COMMENT:

ISSUE:

2 REVISION #2 06.03.22 PLAN CHECK CORRECTIONS

1 REVISION #1 04.04.22 PLAN CHECK CORRECTIONS

SEAL:

LICENSED ARCHITECT
AARON NEUBERT
C-29005
05.31.23
RENEWAL DATE
STATE OF CALIFORNIA

Project No. 2104

ADU PROGRAM

CITY OF FRESNO
CALIFORNIA

DRAWING TITLE:

ADU 03 - CRAFTSMAN
INTERIOR ELEVATIONS

DATE: JUNE 3, 2022

SCALE: 1/2=1'-0"

DRAWN BY:

© Aaron Neubert Architects, INC. 2022

A.402c

City of FRESNO
NOT FOR CONSTRUCTION
PLAN 3
22-TADU-003

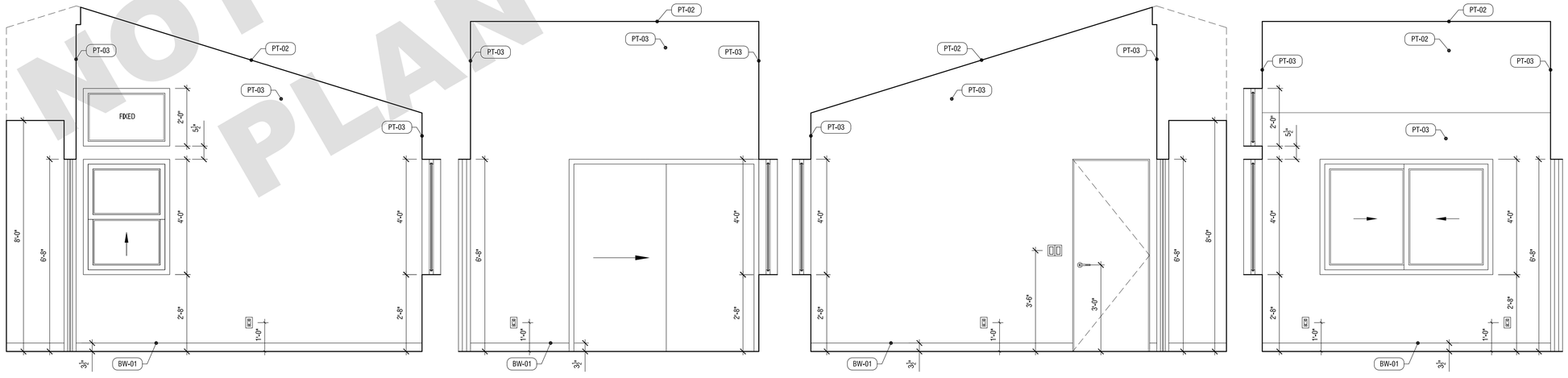

04 BEDROOM ELEVATION
SCALE: 1/2"=1'-0"

03 BEDROOM ELEVATION
SCALE: 1/2"=1'-0"

02 BEDROOM ELEVATION
SCALE: 1/2"=1'-0"

01 BEDROOM ELEVATION
SCALE: 1/2"=1'-0"

ANX

AARON NEUBERT ARCHITECTS

ADU PROGRAM

OWNER:

CITY OF FRESNO
PLANNING AND DEVELOPMENT DEPARTMENT
2600 FRESNO STREET, 3RD FLOOR
FRESNO, CA 93721

ARCHITECT:

AARON NEUBERT ARCHITECTS, INC.
2814 ROWENA AVENUE, SUITE ONE
LOS ANGELES, CALIFORNIA 90039
P. 323.953.4700 F. 323.953.4900

AARON NEUBERT CA# C-29005

STRUCTURAL ENGINEER:

NOUS ENGINEERING, INC.
600 WILSHIRE BOULEVARD, SUITE 760
LOS ANGELES, CALIFORNIA 90017
P. 213.627.6687

MEP ENGINEER:

INNODEZ DESIGN AND ENGINEERING
726 FOXBROUGH PLACE
PLEASANTON, CALIFORNIA 94566
P. 424.414.0997

REVISION: DATE: COMMENT:

ISSUE:

2 REVISION #2 06.03.22 PLAN CHECK CORRECTIONS

1 REVISION #1 04.04.22 PLAN CHECK CORRECTIONS

SEAL:

LICENSED ARCHITECT
AARON NEUBERT
C-29005
06.30.23
RENEWAL DATE
STATE OF CALIFORNIA

Project No. 2104

ADU PROGRAM

CITY OF FRESNO
CALIFORNIA

DRAWING TITLE:

ADU 03 ALT - CRAFTSMAN
INTERIOR ELEVATIONS

DATE: JUNE 3, 2022

SCALE: 1/2"=1'-0"

DRAWN BY:

© Aaron Neubert Architects, INC. 2022

A.402c_alt

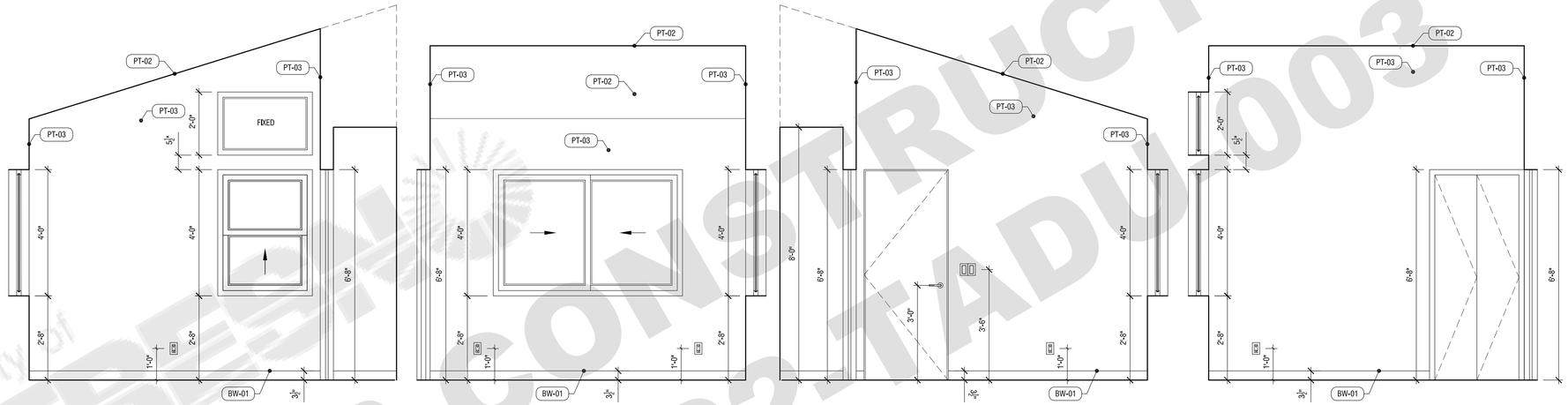

08 SECONDARY BED ELEVATION
SCALE: 1/2"=1'-0"

07 SECONDARY BED ELEVATION
SCALE: 1/2"=1'-0"

06 SECONDARY BED ELEVATION
SCALE: 1/2"=1'-0"

05 SECONDARY BED ELEVATION
SCALE: 1/2"=1'-0"

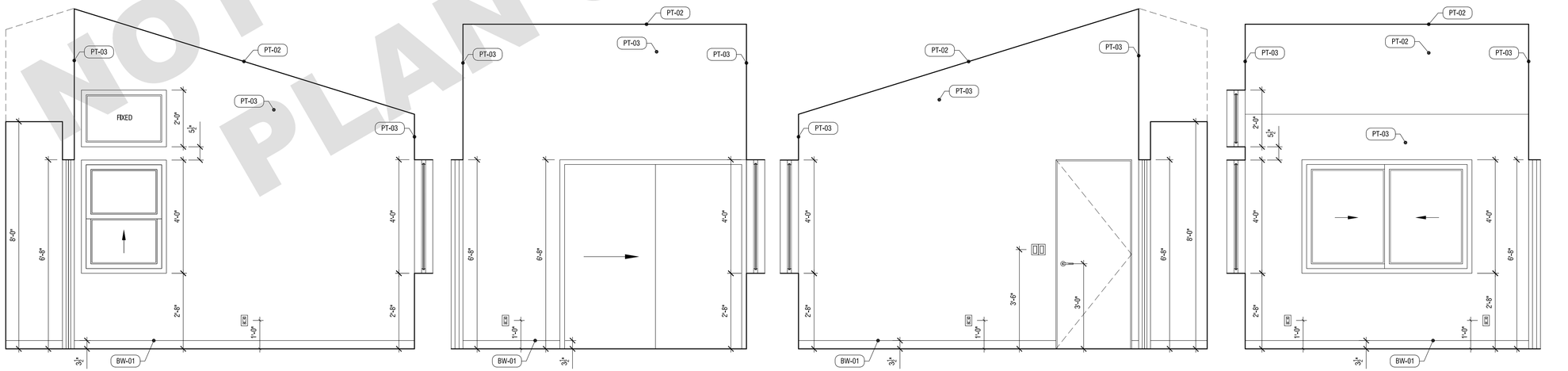

04 PRIMARY BED ELEVATION
SCALE: 1/2"=1'-0"

03 PRIMARY BED ELEVATION
SCALE: 1/2"=1'-0"

02 PRIMARY BED ELEVATION
SCALE: 1/2"=1'-0"

01 PRIMARY BED ELEVATION
SCALE: 1/2"=1'-0"

CITY OF FRESNO
NOT FOR CONSTRUCTION
PLAN 3 22-1ADU-003

ANX

AARON NEUBERT ARCHITECTS

ADU PROGRAM

OWNER:

CITY OF FRESNO
PLANNING AND DEVELOPMENT DEPARTMENT
2600 FRESNO STREET, 3RD FLOOR
FRESNO, CA 93721

ARCHITECT:

AARON NEUBERT ARCHITECTS, INC.
2814 ROWENA AVENUE, SUITE ONE
LOS ANGELES, CALIFORNIA 90039
P. 323.953.4700 F. 323.953.4900

AARON NEUBERT CA# C-29005

STRUCTURAL ENGINEER:

NOUS ENGINEERING, INC.
600 WILSHIRE BOULEVARD, SUITE 760
LOS ANGELES, CALIFORNIA 90017
P. 213.627.6687

MEP ENGINEER:

INNODEZ DESIGN AND ENGINEERING
726 FOXBROUGH PLACE
PLEASANTON, CALIFORNIA 94566
P. 424.414.0997

REVISION:	DATE:	COMMENT:
ISSUE:		
2	REVISION #2 06.03.22	PLAN CHECK CORRECTIONS
1	REVISION #1 04.04.22	PLAN CHECK CORRECTIONS

SEAL:

LICENSED ARCHITECT
AARON NEUBERT
C-29005
05.31.23
RENEWAL DATE
STATE OF CALIFORNIA

Project No. 2104

ADU PROGRAM
CITY OF FRESNO
CALIFORNIA

DRAWING TITLE:

ADU 03 - GABLE
INTERIOR ELEVATIONS

DATE: JUNE 3, 2022
SCALE: 1/2=1'-0"
DRAWN BY:

© Aaron Neubert Architects, INC. 2022

A.402g

City of FRESNO
NOT FOR CONSTRUCTION
PLAN 3 22-TADU-003

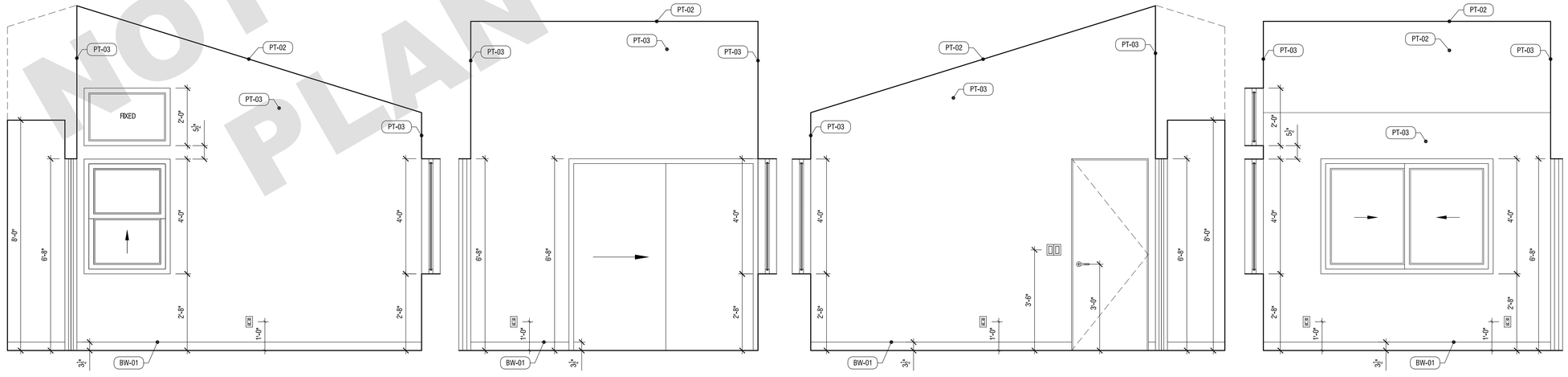

04 BEDROOM ELEVATION
SCALE: 1/2"=1'-0"

03 BEDROOM ELEVATION
SCALE: 1/2"=1'-0"

02 BEDROOM ELEVATION
SCALE: 1/2"=1'-0"

01 BEDROOM ELEVATION
SCALE: 1/2"=1'-0"

ANX

AARON NEUBERT ARCHITECTS

ADU PROGRAM

OWNER:

CITY OF FRESNO
PLANNING AND DEVELOPMENT DEPARTMENT
2600 FRESNO STREET, 3RD FLOOR
FRESNO, CA 93721

ARCHITECT:

AARON NEUBERT ARCHITECTS, INC.
2814 ROWENA AVENUE, SUITE ONE
LOS ANGELES, CALIFORNIA 90039
P. 323.953.4700 F. 323.953.4900

AARON NEUBERT CA# C-29005

STRUCTURAL ENGINEER:

NOUS ENGINEERING, INC.
600 WILSHIRE BOULEVARD, SUITE 760
LOS ANGELES, CALIFORNIA 90017
P. 213.627.6687

MEP ENGINEER:

INNODEZ DESIGN AND ENGINEERING
726 FOXBROUGH PLACE
PLEASANTON, CALIFORNIA 94566
P. 424.414.0997

REVISION: DATE: COMMENT:

ISSUE:

2 REVISION #2 06.03.22 PLAN CHECK CORRECTIONS

1 REVISION #1 04.04.22 PLAN CHECK CORRECTIONS

SEAL:

LICENSED ARCHITECT
AARON NEUBERT
C-29005
05.31.23
RENEWAL DATE
STATE OF CALIFORNIA

Project No. 2104

ADU PROGRAM

CITY OF FRESNO
CALIFORNIA

DRAWING TITLE:

ADU 03 ALT - GABLE
INTERIOR ELEVATIONS

DATE: JUNE 3, 2022

SCALE: 1/2=1'-0"

DRAWN BY:

© Aaron Neubert Architects, INC. 2022

A.402g_alt

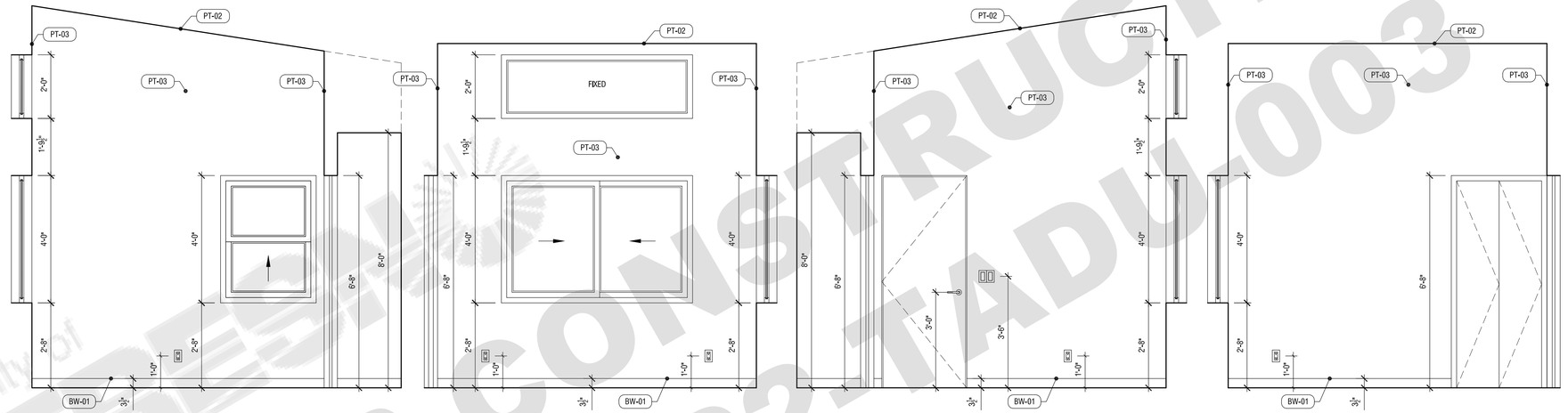

08 SECONDARY BED ELEVATION
SCALE: 1/2"=1'-0"

07 SECONDARY BED ELEVATION
SCALE: 1/2"=1'-0"

06 SECONDARY BED ELEVATION
SCALE: 1/2"=1'-0"

05 SECONDARY BED ELEVATION
SCALE: 1/2"=1'-0"

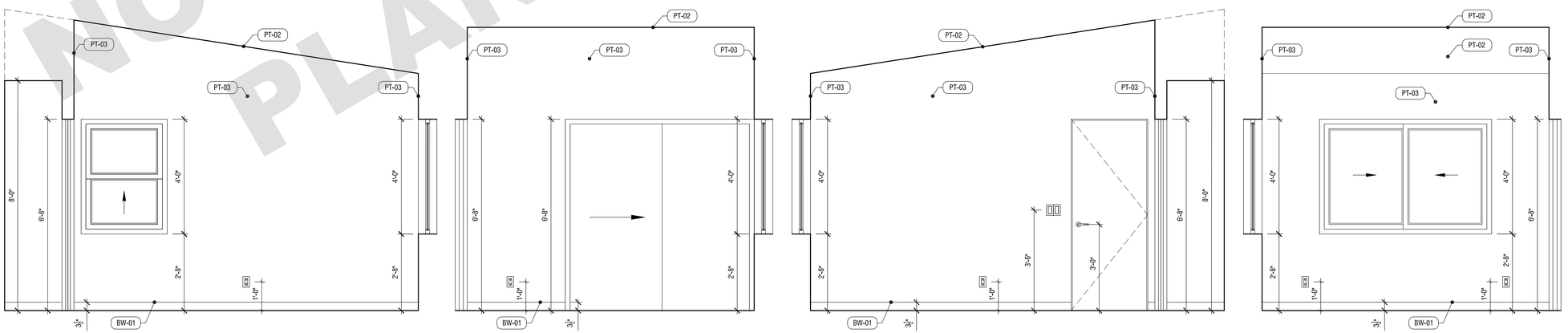

04 PRIMARY BED ELEVATION
SCALE: 1/2"=1'-0"

03 PRIMARY BED ELEVATION
SCALE: 1/2"=1'-0"

02 PRIMARY BED ELEVATION
SCALE: 1/2"=1'-0"

01 PRIMARY BED ELEVATION
SCALE: 1/2"=1'-0"

CITY OF FRESNO
NOT FOR CONSTRUCTION
PLAN 3 22TADU-003

ANX

AARON NEUBERT ARCHITECTS

ADU PROGRAM

OWNER:

CITY OF FRESNO
PLANNING AND DEVELOPMENT DEPARTMENT
2600 FRESNO STREET, 3RD FLOOR
FRESNO, CA 93721

ARCHITECT:

AARON NEUBERT ARCHITECTS, INC.
2814 ROWENA AVENUE, SUITE ONE
LOS ANGELES, CALIFORNIA 90039
P. 323.953.4700 F. 323.953.4900

AARON NEUBERT CA# C-29005

STRUCTURAL ENGINEER:

NOUS ENGINEERING, INC.
600 WILSHIRE BOULEVARD, SUITE 760
LOS ANGELES, CALIFORNIA 90017
P. 213.627.6687

MEP ENGINEER:

INNODEZ DESIGN AND ENGINEERING
726 FOXBOROUGH PLACE
PLEASANTON, CALIFORNIA 94566
P. 424.414.0997

REVISION: DATE: COMMENT:

ISSUE:

2 REVISION #2 06.03.22 PLAN CHECK CORRECTIONS

1 REVISION #1 04.04.22 PLAN CHECK CORRECTIONS

SEAL:

LICENSED ARCHITECT — AARON NEUBERT — C-29005 — RENEWAL DATE 08.31.23 — STATE OF CALIFORNIA

Project No. 2104

ADU PROGRAM

CITY OF FRESNO
CALIFORNIA

DRAWING TITLE:

ADU 03 - CONTEMPORARY
INTERIOR ELEVATIONS

DATE: JUNE 3, 2022

SCALE: 1/2=1'-0"

DRAWN BY:

© Aaron Neubert Architects, INC. 2022

A.402s

City of FRESNO
NOT FOR CONSTRUCTION
PLAN 3 22-TADU-003

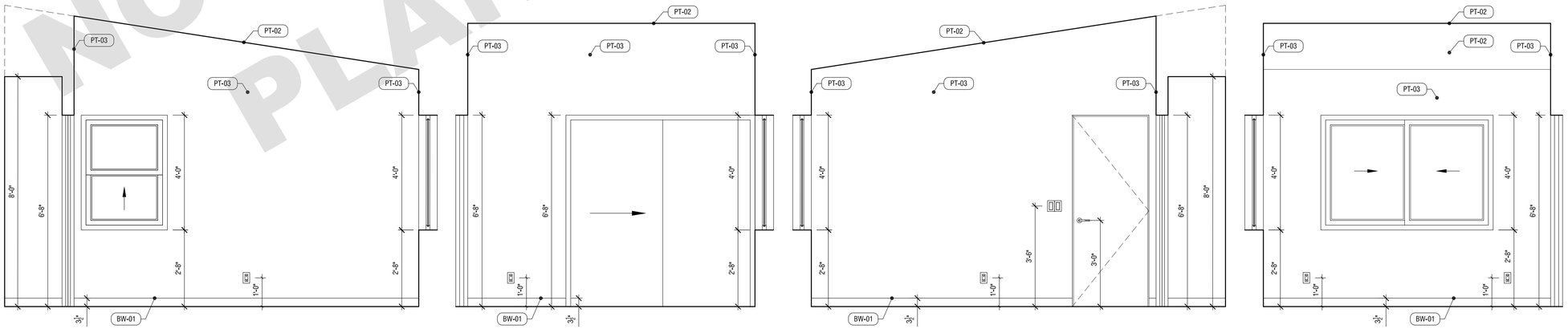

04 BEDROOM ELEVATION
SCALE: 1/2"=1'-0"

03 BEDROOM ELEVATION
SCALE: 1/2"=1'-0"

02 BEDROOM ELEVATION
SCALE: 1/2"=1'-0"

01 BEDROOM ELEVATION
SCALE: 1/2"=1'-0"

ANX

AARON NEUBERT ARCHITECTS

ADU PROGRAM

OWNER:

CITY OF FRESNO
PLANNING AND DEVELOPMENT DEPARTMENT
2600 FRESNO STREET, 3RD FLOOR
FRESNO, CA 93721

ARCHITECT:

AARON NEUBERT ARCHITECTS, INC.
2814 ROWENA AVENUE, SUITE ONE
LOS ANGELES, CALIFORNIA 90039
P. 323.953.4700 F. 323.953.4900

AARON NEUBERT CA# C-29005

STRUCTURAL ENGINEER:

NOUS ENGINEERING, INC.
600 WILSHIRE BOULEVARD, SUITE 760
LOS ANGELES, CALIFORNIA 90017
P. 213.627.6687

MEP ENGINEER:

INNODEZ DESIGN AND ENGINEERING
726 FOXBROUGH PLACE
PLEASANTON, CALIFORNIA 94566
P. 424.414.0997

REVISION: DATE: COMMENT:

ISSUE:

2 REVISION #2 06.03.22 PLAN CHECK CORRECTIONS

1 REVISION #1 04.04.22 PLAN CHECK CORRECTIONS

SEAL:

LICENSED ARCHITECT
AARON NEUBERT
C-29005
05.31.23
RENEWAL DATE
STATE OF CALIFORNIA

Project No. 2104

ADU PROGRAM

CITY OF FRESNO
CALIFORNIA

DRAWING TITLE:

ADU 03 ALT - CONTEMPORARY INTERIOR ELEVATIONS

DATE: JUNE 3, 2022

SCALE: 1/2=1'-0"

DRAWN BY:

A.402s_alt

© Aaron Neubert Architects, INC. 2022

CC CAST IN PLACE CONCRETE

CC-1 PROPORTION, MIX, TRANSPORT, AND PLACE CAST-IN-PLACE CONCRETE IN ACCORDANCE WITH ACI 301 "SPECIFICATIONS FOR STRUCTURAL CONCRETE," UON.

CC-2 CONCRETE IS REINFORCED AND CAST-IN-PLACE UNLESS OTHERWISE NOTED. WHERE REINFORCING IS NOT SPECIFICALLY SHOWN OR WHERE DETAILS ARE NOT GIVEN, PROVIDE REINFORCING SIMILAR TO THAT SHOWN FOR SIMILAR CONDITIONS, SUBJECT TO REVIEW BY THE OWNER'S REPRESENTATIVE.

CC-3 ROUGHEN CONCRETE SURFACES OF CONSTRUCTION JOINTS TO 1/4 INCH AMPLITUDE AND CLEAN OF LAITANCE, FOREIGN MATTER, AND LOOSE PARTICLES. LOCATE CONSTRUCTION JOINTS AS SHOWN ON THE DRAWINGS. SUBMIT ALTERNATE JOINT LOCATIONS OR JOINTS NOT SHOWN TO THE OWNER'S REPRESENTATIVE FOR REVIEW AND APPROVAL PRIOR TO PROCEEDING WITH THE WORK.

CC-4 AT LOCATIONS WHERE CONCRETE IS CAST AGAINST EXISTING CONCRETE, ROUGHEN CONTACT SURFACES TO 1/4 INCH AMPLITUDE AND CLEAN OF LAITANCE, FOREIGN MATTER, AND LOOSE PARTICLES.

CC-5 AT LOCATIONS WHERE CONCRETE IS CAST AGAINST EXISTING MASONRY, THOROUGHLY ROUGHEN CONTACT SURFACES BY LIGHT SANDBLASTING OR OTHER SUITABLE MEANS AND CLEAN OF LAITANCE, FOREIGN MATTER, AND LOOSE PARTICLES.

CC-6 REFER TO ARCHITECTURAL AND MECHANICAL DRAWINGS FOR LOCATIONS OF ADDITIONAL CONCRETE CURBS AND HOUSEKEEPING PADS NOT SHOWN.

CC-7 CONTINUOUSLY MOIST CURE CONCRETE SLABS-ON-GRADE FOR 7 DAYS MINIMUM. WATER FOG SPRAYS, PONDING, SATURATED ABSORPTIVE COVERS, OR MOISTURE RETAINING COVERS MAY BE USED. CURING COMPOUNDS CAN BE USED BASED ON SATISFACTORY PERFORMANCE ON PREVIOUS APPLICATIONS. CONTRACTOR TO SUBMIT SPECIFICATIONS FOR REVIEW AND APPROVAL.

CC-8 NON-SHRINK GROUT: NON-METALLIC AGGREGATE TYPE, COMPLYING WITH ASTM C1107 AND CAPABLE OF DEVELOPING A MINIMUM COMPRESSIVE STRENGTH OF 7,000 PSI AT 28 DAYS.

CC-9 CONCRETE TYPES:

LOCATION	28 DAY f'c	TYPE	W/C RATIO	MAX AGGREGATE SIZE
ALL	2500 PSI	NORMAL WEIGHT	0.45	3/4"

CC-10 CONCRETE CLEAR COVER TO REINFORCING BARS IS AS FOLLOWS:

LOCATION	CLEAR COVER
CONCRETE CAST AGAINST AND PERMANENTLY EXPOSED TO EARTH	
- ALL BARS	3"
CONCRETE EXPOSED TO EARTH OR WEATHER:	
- #6 THROUGH #18 BARS	2"
- #5 BAR, W31 OR D31 WIRE, AND SMALLER	1 1/2"
CONCRETE NOT EXPOSED TO EARTH OR WEATHER:	
- SLABS, WALLS, JOISTS: #14 AND #18 BARS	1 1/2"
- SLABS, WALLS, JOISTS: #11 AND SMALLER	3/4"
- BEAMS, COLUMNS: PRIMARY REINFORCEMENT, TIES, STIRRUPS, SPIRALS AND HOOPS	1 1/2"

RC ROUGH CARPENTRY

RC-1 FRAMING LUMBER: DOUGLAS FIR (COAST REGION) GRADED AND MARKED IN ACCORDANCE WITH THE STD GRADING RULES NO. 17 OF THE WEST COAST LUMBER INSPECTION BUREAU (WCLIB) OR WESTERN LUMBER GRADING RULES, OF THE WESTERN WOOD PRODUCTS ASSOCIATION (WWPA). USE LUMBER OF THE FOLLOWING GRADES:

- A. SILLS: STUD GRADE PRESSURE OR PRESERVATIVE TREATED, NATURALLY DURABLE, OR FOUNDATION GRADE REDWOOD; 19% MOISTURE CONTENT, UON.
- B. STUDS: STUD GRADE; 19% MOISTURE CONTENT, UON.
- C. JOISTS, PLANKS AND PLATES: DF #2; 15% MOISTURE CONTENT, UON.
- D. BEAMS, DF #1; 19% MOISTURE CONTENT, UON.
- E. POSTS, DF #1; 19% MOISTURE CONTENT, UON.
- F. FRAMING, BLOCKING AND BRIDGING: STUD GRADE; 15% MOISTURE CONTENT, UON.
- G. PLYWOOD BLOCKING: DF #2; 19% MOISTURE CONTENT.
- H. BACKING: PER CONSTRUCTION; 19% MOISTURE CONTENT

RC-2 MANUFACTURED LUMBER:

- A. LVL: MICROLAM LVL 1.9E, ICC ESR-1387 & LARR 25202.
- B. PSL: PARALLAM PSL 2.0E, ICC ESR-1387 & LARR 25202.

RC-3 PANEL SHEATHING: IDENTIFY WOOD STRUCTURAL PANELS WITH THE APPROPRIATE TRADEMARK OF APA-THE ENGINEERED WOOD ASSOCIATION AND MEET THE REQUIREMENTS OF THE VOLUNTARY PRODUCT STD PS-1 OR PS-2 AND APA PRP-108 PERFORMANCE STD.

- A. PANEL SHEATHING TO BE EXPOSURE 1.
- B. PLYWOOD PANELS TO BE 5-PLY MINIMUM, EXCEPT 3/8" PANELS TO BE 3-PLY MINIMUM.
- C. OSB PANELS MAY BE USED WITH APPROVAL OF SEOR.
- D. PLYWOOD TO BE C-C GRADE AT LOCATIONS EXPOSED TO WEATHER; CD GRADE ELSEWHERE.
- E. SHEATH ALL EXTERIOR WALLS WITH 15/32" PLYWOOD WITH 10d NAILS WITH (6",6",12") OC, (BN, EN, FN).
- F. PROVIDE THE FOLLOWING GRADE AND SPAN RATINGS:

PANEL THICKNESS	MINIMUM GRADE	ROOF/FLOOR RATING
3/8	STRUCTURAL 1	24/0
7/16	STRUCTURAL 1	24/16
15/32	STRUCTURAL 1	32/16
19/32 AND 5/8	CD/CC	40/20
3/4	CD/CC	48/24
7/8 AND 1	CD/CC	54/32
1 1/8	CD/CC	60/48

RC-4 ROUGH HARDWARE:

- A. NAILS: COMMON WIRE NAILS, FEDERAL SPECIFICATION FF-N-105B, STANDARD LENGTHS UON USE HOT-DIPPED ZINC-COATED GALVANIZED NAILS FOR EXTERIOR INSTALLATIONS AND WHEN PENETRATING PRESSURE TREATED OR FIRE-RETARDANT LUMBER.
- B. BOLTS AND THREADED RODS: ASTM A307, SQ OR HEXAGONAL HEAD MACHINE BOLTS WITH ASTM A563 NUTS. USE MALLEABLE IRON WASHERS UNDER HEAD AND NUT WHEN IN CONTACT WITH WOOD. AT SILL PLATES USE 2"x2"x3/16" MINIMUM PLATE WASHERS. AT ALL SHEARWALL SILL PLATE ANCHORS, USE THE FOLLOWING PLATE WASHERS:

5/8" DIA ANCHOR BOLTS = 3"X3"X1/4" SQ. WASHER
3/4" DIA ANCHOR BOLTS = 3"X3"X5/16" SQ. WASHER
7/8" DIA ANCHOR BOLTS = 3"X3"X5/16" SQ. WASHER
1" DIA ANCHOR BOLTS = 3 1/2"X3 1/2"X3/8" SQ. WASHER

- C. LAG SCREWS: ASTM A307, ANSI/ASME STANDARD B18.2.1. USE ANSI B18.22.1 WASHERS UNDER HEAD WHEN IN CONTACT WITH WOOD.
- D. SCREWS: ASTM A307, ANSI/ASME STANDARD B18.6.1. USE CADMIUM-PLATED PAN OR ROUND HEADED SCREWS AT STEEL TO WOOD AND WOOD TO WOOD CONNECTIONS.
- E. BOLTS, NUTS, WASHERS, STRAPS AND OTHER HARDWARE EXPOSED TO THE WEATHER TO BE HOT-DIPPED GALVANIZED OR STAINLESS STEEL.
- F. FRAMING CLIPS, SHEET METAL STRAPS, ETC.: SIMPSON, UNIVERSAL, OR EQUIVALENT, WITH LARR REPORTS. DESIGNATIONS ON DRAWINGS ARE BASED ON SIMPSON CATALOGUE NUMBERS (IAPMO UES ER 112 & LARR 25814). PROVIDE THE TYPE OF NAILS SPECIFIED BY THE MANUFACTURER AND FULLY DRIVE NAILS INTO ALL HOLES OF THE CONNECTOR UNLESS NOTED OTHERWISE ON THE PLANS. ALL CONNECTORS SHALL BE GALVANIZED OR HAVE ANOTHER FACTORY APPLIED FINISH. ALL STEEL FRAMING HANGERS TO BE TORSIONAL RESTRAINT. SOLID BLOCKING REQUIRED BETWEEN JOISTS WHERE TORSIONAL RESTRAINT HANGERS DO NOT OCCUR.

RC-5 BOLT AND SCREW INSTALLATION

- A. DRILL BOLT HOLES 1/32 TO 1/16 (MAX) INCH LARGER IN DIA THAN THE BOLT NOMINAL DIA.
- B. DRILL PRE-BORED LEAD HOLES FOR WOOD SCREWS AS FOLLOWS.
  1. PROVIDE LEAD HOLE 40% - 70% OF THREADED SHANK DIA AND FULL DIA FOR SMOOTH SHANK PORTION.
  2. DRILL LEAD HOLE FOR THE SHANK TO A DEPTH EQUAL TO THE LENGTH OF THE UNTHREADED PORTION IN THE MAIN MEMBER. USE A DRILL BIT 7/8 THE DIA OF THE WOOD SCREW.
  3. EXTEND THE LEAD HOLE FOR THE THREADED PORTION OF THE SCREW WITH A DRILL BIT WHOSE DIA IS 40%-70% THE DIA OF THE SCREW AT THE ROOT OF THE THREAD.
  4. INSERT THE SCREW INTO LEAD HOLE BY TURNING. DO NOT DRIVE WITH A HAMMER.
  5. LUBRICATE WITH SOAP OR BEESWAX TO FACILITATE INSTALLATION.
- C. DRILL PRE-BORED LEAD HOLES FOR LAG SCREWS AS FOLLOWS.
  1. PROVIDE LEAD HOLE 40% - 70% OF THREADED SHANK DIA AND FULL DIA FOR SMOOTH SHANK PORTION.
  2. DRILL LEAD HOLE FOR THE SHANK TO A DEPTH EQUAL TO THE LENGTH OF THE UNTHREADED PORTION IN THE MAIN MEMBER. USE A DRILL BIT OF THE SAME DIA AS THE LAG SCREW.
  3. EXTEND THE LEAD HOLE FOR THE THREADED PORTION OF THE LAG SCREW WITH A DRILL BIT WHOSE DIA IS 60 PERCENT OF THE NOMINAL LAG SCREW DIA.
  4. INSERT LAG SCREW INTO LEAD HOLE BY TURNING. DO NOT DRIVE WITH A HAMMER.
  5. LUBRICATE WITH SOAP OR BEESWAX TO FACILITATE INSTALLATION.

RC ROUGH CARPENTRY

RC-6 HOLD DOWN CONNECTOR BOLTS INTO WOOD FRAMING REQUIRE APPROVED PLATE WASHERS; AND HOLD DOWNS SHALL BE FINGER TIGHT AND 1/2 WRENCH TURNED JUST PRIOR TO COVERING WALL FRAMING. CONNECTOR BOLTS INTO WOOD FRAMING REQUIRE STEEL PLATE WASHERS ON THE POST ON THE OPPOSITE SIDE OF ANCHORAGE DEVICE. PLATE SHALL BE 0.299x3x3 IN MIN.

RC-7 HOLD-DOWN HARDWARE MUST BE SECURED IN PLACE PRIOR TO FOUNDATION INSPECTION.

RC-8 INSTALL SOLID BLOCKING BETWEEN JOISTS AT ENDS AND OVER SUPPORTS. PROVIDE 2 INCH BY 3 INCH CROSS BRIDGING, METAL BRIDGING, OR SOLID BLOCKING BETWEEN JOISTS IN SPANS EQUALLY SPACED 8 FEET OC MAXIMUM AND WHERE INDICATED.

RC-9 DO NOT USE WOOD SHINGLE SHIMS UNDER STUDS, JOISTS, BEAMS, OR POSTS.

RC-10 NAILING:

- A. DRIVE NAILS PERPENDICULAR TO THE GRAIN, UON
- B. PREDRILLED HOLES TO 3/4 OF NAIL DIA WHERE SPECIFIED AND WHEN WOOD TENDS TO SPLIT.
- C. AIR-DRIVEN NAILS TO BE FULL-HEADED NAILS. DO NOT OVERDRIVE NAILS.
- D. PANEL SHEATHING
  1. AT DIAPHRAGM SHEATHING, USE RING SHANK NAILS. USE SMOOTH SHANK NAILS AT WALLS.
  2. USE OF MACHINE NAILING IS SUBJECT TO A SATISFACTORY JOB SITE DEMONSTRATION FOR EACH PROJECT AND APPROVAL BY THE OWNER'S REPRESENTATIVE. NAIL HEADS THAT PENETRATE THE OUTER PLY MORE THAN WOULD BE NORMAL FOR A HAND HAMMER OR IF THE MINIMUM ALLOWABLE EDGE DISTANCES ARE NOT MAINTAINED THE INSTALLATION IS UNSATISFACTORY. MACHINE NAILING IS NOT APPROVED IN 5/16" OR LESS SHEATHING.
  3. DIAPHRAGM NAILING TO BE INSPECTED BEFORE COVERING. FACE GRAIN OF PLYWOOD TO BE PERPENDICULAR TO SUPPORTS. DIAPHRAGM SHEATHING MUST BE BLOCKED AT EDGES. PLYWOOD SPANS SHALL CONFORM WITH TABLE 2304.8(1).
  4. GLUE FLOOR SHEATHING AT ALL POINTS OF CONTACT.
- E. PROVIDE MINIMUM NAILING PER TABLE 2304.9.1 OF THE IBC/CBC, UON

FASTENING SCHEDULE

	CONNECTION	NAILING	STAPLES	LOCATION
1	JOIST TO SILL OR GIRDER	3-8d COMMON	3-3" 14 GA STAPLES	TOE NAIL
2	BRIDGING TO JOISTS	2-8d COMMON	2-3" 14 GA STAPLES	TOE NAIL, EA END
3	SOLE PLATE TO JOISTS OR BLOCKING	16d COMMON @ 16" OC	3" 14 GA STAPLES @ 12" OC	TYP FACE
4	TOP PLATE TO STUD	2-16d COMMON	3-3" 14 GA STAPLES	END NAIL
5A	STUD TO SOLE PLATE	4-8d COMMON	3-3" 14 GA STAPLES	TOE NAIL
5B	STUD TO SOLE PLATE	2-16d COMMON	3-3" 14 GA STAPLES	END NAIL
6	DOUBLE STUDS	16d COMMON @ 24" OC	3" 14 GA STAPLES @ 8" OC	FACE
7A	DOUBLE TOP PLATE	16d COMMON @ 16" OC	3" 14 GA STAPLES @ 12" OC	TYP FACE
7B	DOUBLE TOP PLATE	8-16d COMMON	12-3" 14 GA STAPLES	LAP
8	BLOCKING BETWEEN JOISTS OR RAFTERS TO TOP PLATE	3-8d COMMON	3-3" 14 GA STAPLES	TOE NAIL
9	RIM JOISTS TO TOP PLATE	8d COMMON @ 6" OC	3" 14 GA STAPLES @ 6" OC	TOE NAIL
10	TOP PLATES, LAPS AND INTERSECTIONS	2-16d COMMON	3-3" 14 GA STAPLES	FACE
11	CONT HEADER, TWO PIECES	16d COMMON	-	16" OC ALONG EDGE
12	CEILING JOISTS TO PLATE	3-8d COMMON	5-3" 14 GA STAPLES	TOE NAIL
13	CONT HEADER TO STUD	4-8d COMMON	-	TOE NAIL
14	CEILING JOISTS, LAPS OVER PARTITIONS	3-16d COMMON	3-3" 14 GA STAPLES	FACE
15	CEILING JOISTS PARALLEL TO RAFTERS	3-16d COMMON	4-3" 14 GA STAPLES	FACE
16	RAFTER TO PLATE	3-8d COMMON	3-3" 14 GA STAPLES	TOE NAIL
17A	BUILT-UP GIRDER BEAMS	20d COMMON @ 32" OC	3" 14 GA STAPLES @ 24" OC	FACE NAIL @ T&B STAGGERED
17B	BUILT-UP GIRDER BEAMS	2-20d COMMON	3-3" 14 GA STAPLES	FACE NAIL @ ENDS & EACH SPLICE
18	JOIST TO BAND JOIST	3-16d COMMON	4-3" 14 GA STAPLES	TOE NAIL

RE REINFORCING STEEL

RE-1 FABRICATE AND PLACE REINFORCING STEEL IN ACCORDANCE WITH ACI 315 "DETAILS AND DETAILING CONCRETE REINFORCING" AND ACI 301 "SPECIFICATIONS FOR STRUCTURAL CONCRETE," UON.

RE-2 ACCURATELY POSITION, SUPPORT, AND SECURE REINFORCEMENT FROM DISPLACING DUE TO FORMWORK, CONSTRUCTION, OR CONCRETE PLACEMENT OPERATIONS. LOCATE AND SUPPORT REINFORCING BY METAL CHAIRS, RUNNERS, BOLSTERS, SPACERS, AND HANGERS AT A MAXIMUM 3-FOOT SPACING.

RE-3 TERMINATE REINFORCING STEEL IN STD HOOKS, UNLESS OTHERWISE SHOWN.

RE-4 PROVIDE REINFORCING SHOWN OR NOTED CONTINUOUS IN LENGTHS AS LONG AS PRACTICABLE.

RE-5 REINFORCING STEEL #8 AND LARGER AND ALL REINFORCING STEEL TO BE WELDED TO BE ASTM A706, 60KSI. ALL OTHER REINFORCING STEEL TO BE ASTM A615, 60KSI.

RE-6 SMOOTH DOWELS IN SLAB ON GRADE TO BE ASTM A36, 36KSI.

FN FOUNDATION AND SITE WORK

FN-1 GROUNDWATER IS NOT EXPECTED TO BE A FACTOR IN DEVELOPMENT OF SITE.

FN-2 LOCATE AND PROTECT EXISTING UTILITIES TO REMAIN DURING AND/OR AFTER CONSTRUCTION.

FN-3 REMOVE ABANDONED FOOTINGS, UTILITIES, ETC. WHICH INTERFERE WITH NEW CONSTRUCTION, UNLESS OTHERWISE INDICATED.

FN-4 NOTIFY THE OWNER'S REPRESENTATIVE IF ANY BURIED STRUCTURES NOT INDICATED, SUCH AS CESSPOOLS, CISTERNS, FOUNDATIONS, ETC., ARE FOUND.

FN-5 THE CONTRACTOR IS SOLELY RESPONSIBLE FOR EXCAVATION PROCEDURES INCLUDING LAGGING, SHORING, UNDERPINNING AND PROTECTION OF EXISTING CONSTRUCTION.

FN-6 REMOVE LOOSE SOIL AND STANDING WATER FROM FOUNDATION EXCAVATIONS PRIOR TO PLACING CONCRETE.

FN-7 IF ADVERSE SOIL CONDITIONS ARE ENCOUNTERED, NOTIFY INSPECTOR AND SOILS REPORT MAY BE REQUIRED.

IO STRUCTURAL TEST AND INSPECTIONS

IO-1 AN INDEPENDENT TESTING AGENCY AND SPECIAL INSPECTORS WILL BE RETAINED BY THE OWNER TO PERFORM THE FOLLOWING TESTS AND INSPECTION. PROVIDE ACCESS AND FURNISH SAMPLES TO THE AGENCY AS REQUIRED BY THE CONTRACT DOCUMENTS.

IO-2 CONTRACTORS RESPONSIBLE FOR THE CONSTRUCTION OF A WIND OR SEISMIC FORCE RESISTING SYSTEM/ COMPONENT AS LISTED IN THE "STATEMENT OF SPECIAL INSPECTION" SHALL SUBMIT A WRITTEN STATEMENT OF RESPONSIBILITY TO THE LADBS INSPECTORS AND THE OWNER PRIOR TO THE COMMENCEMENT OF WORK ON SUCH A SYSTEM OR COMPONENT PER 1704.4.

IO-3 IF INITIAL TESTS OR INSPECTIONS MADE BY THE OWNER'S TESTING AGENCY REVEAL THAT ANY PORTION OF THE WORK DOES NOT COMPLY WITH THE CONTRACT DOCUMENTS, ADDITIONAL TESTS, INSPECTIONS, AND NECESSARY REPAIRS WILL BE MADE AT THE CONTRACTOR'S EXPENSE.

IO-4 THE FOLLOWING ITEMS REQUIRE TESTS AND INSPECTIONS IN ACCORDANCE WITH THE REQUIREMENTS OF THE CHAPTER "STRUCTURAL TEST AND INSPECTIONS" OF THE CODE OF THE GOVERNING JURISDICTION AS NOTED IN THE GENERAL SECTION OF THESE GENERAL NOTES. AN "X" PRESENT IN COLUMN "C" INDICATES CONTINUOUS INSPECTION & "X" PRESENT IN COLUMN "P" INDICATES PERIODIC INSPECTION.

CONCRETE

	VERIFICATION AND INSPECTIONS	C	P
1.	INSPECTION OF REINFORCING STEEL, PRESTRESSING TENDONS, AND VERIFY PLACEMENTS.	-	X
2.	INSPECT ANCHORS CAST IN CONCRETE.	-	X
3.	INSPECT ANCHORS POST-INSTALLED IN HARDENED CONCRETE MEMBERS.		
	A. ADHESIVE ANCHORS INSTALLED IN HORIZONTALLY OR UPWARDLY INCLINED ORIENTATIONS TO RESIST SUSTAINED TENSION LOADS.	X	-
	B. MECHANICAL ANCHORS AND ADHESIVE ANCHORS NOT DEFINED IN 4A.	-	X
4.	VERIFYING USE OF REQUIRED DESIGN MIX.	-	X
5.	PRIOR TO CONCRETE PLACEMENT, FABRICATE SPECIMENS FOR STRENGTH TESTS, PERFORM SLUMP AND AIR CONTENT TESTS, AND DETERMINE THE TEMPERATURE OF THE CONCRETE.	X	-
6.	INSPECT CONCRETE AND SHOTCRETE PLACEMENT FOR PROPER APPLICATION TECHNIQUES.	X	-
7.	VERIFY MAINTENANCE OF SPECIFIED CURING TEMPERATURE AND TECHNIQUES.	-	X
8.	INSPECT FORMWORK FOR SHAPE, LOCATION AND DIMENSIONS OF CONCRETE MEMBER BEING FORMED.	-	X

GR GENERAL REQUIREMENTS

GR-1 MATERIALS AND WORKMANSHIP TO CONFORM WITH THE 2019 EDITION OF THE CALIFORNIA BUILDING CODE AND THE REQUIREMENTS OF THE CONTRACT DOCUMENTS.

GR-2 REFERENCE TO CODES, RULES, REGULATIONS, STANDARDS, MANUFACTURER'S INSTRUCTIONS OR REQUIREMENTS OF REGULATORY AGENCIES IS TO THE LATEST PRINTED EDITION OF EACH IN EFFECT AT THE DATE OF SUBMISSION OF BID UNLESS THE DOCUMENT DATE IS SHOWN.

GR-3 VERIFY ALL DIMENSIONS, ELEVATIONS, & SITE CONDITIONS BEFORE STARTING WORK.

GR-4 REFER TO ARCHITECTURAL DRAWINGS FOR EXTERIOR SLABS.

GR-5 DRAWINGS INDICATE GENERAL AND TYPICAL DETAILS OF CONSTRUCTION. WHERE CONDITIONS ARE NOT SPECIFICALLY INDICATED BUT ARE OF SIMILAR CHARACTER TO DETAILS SHOWN, USE SIMILAR DETAILS OF CONSTRUCTION, SUBJECT TO REVIEW BY THE OWNER'S REPRESENTATIVE.

GR-6 THE CONTRACTOR IS RESPONSIBLE FOR COORDINATING THE WORK OF ALL TRADES AND FOR CHECKING DIMENSIONS. NOTIFY THE OWNER'S REPRESENTATIVE OF ANY DISCREPANCIES AND RESOLVE BEFORE PROCEEDING WITH THE WORK.

GR-7 DO NOT SCALE THE DRAWINGS.

GR-8 PROVIDE MEASURES NECESSARY TO PROTECT THE STRUCTURE DURING CONSTRUCTION. SUCH MEASURES INCLUDE, BUT MAY NOT BE LIMITED TO, BRACING AND SHORING FOR LOADS DURING CONSTRUCTION. RETAIN A REGISTERED CIVIL ENGINEER WHOM IS PROPERLY QUALIFIED TO DESIGN BRACING, SHORING, ETC. VISITS TO THE SITE BY THE OWNER'S REPRESENTATIVE WILL NOT INCLUDE OBSERVATION OF THE ABOVE NOTED ITEMS.

GR-9 INFORMATION SHOWN ON THE DRAWINGS RELATED TO EXISTING CONDITIONS REPRESENTS THE PRESENT KNOWLEDGE, BUT WITHOUT GUARANTEE OF ACCURACY. REPORT CONDITIONS THAT CONFLICT WITH THE CONTRACT DOCUMENTS TO THE OWNER'S REPRESENTATIVE. DO NOT DEVIATE FROM THE CONTRACT DOCUMENTS WITHOUT WRITTEN DIRECTION FROM THE OWNER'S REPRESENTATIVE.

GR-10 REFER TO ARCHITECTURAL DRAWINGS FOR SIZE AND LOCATION OF FLOOR, ROOF AND WALL OPENINGS NOT SHOWN ON THE STRUCTURAL DRAWINGS. COORDINATE THE SIZE AND LOCATION OF OPENINGS ASSOCIATED WITH, BUT NOT LIMITED TO, ELECTRICAL, MECHANICAL AND PLUMBING TRADES. SUBMIT FINAL SIZING AND LOCATION REQUIREMENTS OF OPENINGS TO THE OWNER'S REPRESENTATIVE FOR REVIEW.

GR-11 THE CONTRACTOR IS SOLELY RESPONSIBLE FOR PROVIDING A SAFE PLACE TO WORK AND MEETING THE REQUIREMENTS OF ALL APPLICABLE JURISDICTIONS. EXECUTE WORK TO ENSURE THE SAFETY OF PERSONS AND ADJACENT PROPERTY AGAINST DAMAGE BY FALLING DEBRIS AND OTHER HAZARDS IN CONNECTION WITH THIS WORK.

DC DESIGN CRITERIA

DC-1 APPLICABLE CODE: 2019 CALIFORNIA BUILDING CODE WITH CITY OF LOS ANGELES AMENDMENTS

DC-2 PROJECT TYPE: NEW ADU

DC-3 TYPE OF CONSTRUCTION: LIGHT-FRAMED WOOD CONSTRUCTION ON SHALLOW FOUNDATIONS

DC-4 FOUNDATION DESIGNS ARE IN ACCORDANCE WITH THE MINIMUM DESIGN RECOMMENDATIONS FOUND IN CHAPTER 18 OF THE CALIFORNIA BUILDING CODE.

ALLOWABLE NET SOIL PRESSURE = 1500 PSF

ADU DESIGNED FOR LEVEL GRADE. CITY OF FRESNO TO APPROVE ADU LOCATION. CONTRACTOR TO VERIFY CONSTRUCTION WILL NOT UNDERMINE OR SURCHARGE ADJACENT PROPERTIES.

DC-5 THE STRUCTURAL SCOPE INVOLVES THE CONSTRUCTION OF A NEW 1-STORY ADU.

DC-6 GRAVITY LOADS:

DEAD LOADS

ROOF = 21 PSF
SOLAR PANELS = 6 PSF

LIVE LOADS

ROOF = 20 PSF (REDUCIBLE)
FLOORS = 40 PSF

DC-7 SEISMIC DESIGN:
THE STRUCTURE HAS BEEN EVALUATED IN ACCORDANCE WITH THE CALIFORNIA BUILDING CODE. THE FOLLOWING VALUES HAVE BEEN USED FOR THE DESIGN OF THE LATERAL FORCE RESISTING SYSTEM. SEISMIC DESIGN CATEGORY, SITE CLASS AND ALL SPECTRAL ACCELERATIONS SHOULD BE REVIEWED FOR SITE SPECIFIC VALUES.

SITE CLASS = D (DEFAULT)
ANALYSIS PROCEDURE = EQUIVALENT LATERAL FORCE
RHO = 1.3

S_S = 0.737
S_1 = 0.266
S_{DS} = 0.595
I = 1.0 FOR OCCUPANCY CATEGORY (II)

STRUCTURE: ADU
LFRS = LIGHT-FRAMED WOOD SHEAR WALLS
R = 6.5
OVERSTRENGTH = 3.0
Cs = 0.091

DC-8 WIND DESIGN:

BASIC WIND SPEED, V = 94MPH (3 SECOND GUST)
EXPOSURE CATEGORY = B
GUST EFFECT FACTOR = 0.85
Kd = 0.85
Kz = 0.66
Kzt = 1.0
Ke = 1.0
ENCLOSURE CLASSIFICATION = ENCLOSED
INTERNAL PRESSURE COEFFICIENT GCpi = ±0.18

STRUCTURAL DRAWING LIST

Sheet Number	Sheet Name
S0 SERIES: SHEET LIST, GENERAL NOTES, TYPICAL DETAILS	
S.000	GENERAL NOTES & SHEET LIST
S.010	TYPICAL CONCRETE DETAILS
S.020	TYPICAL WOOD DETAILS - GENERAL AND STUD WALLS
S.021	TYPICAL WOOD DETAILS - SHEAR WALLS
S.022	TYPICAL WOOD DETAILS - SHEAR WALL AND ROOF CONNECTIONS
S.023	TYPICAL WOOD DETAILS - DIAPHRAGMS
S1 SERIES: FOUNDATION AND FRAMING PLANS	
S.100c	CRAFTSMAN FOUNDATION AND FRAMING PLANS
S.100g	GABLE (GABLE-STUCCO) FOUNDATION AND FRAMING PLANS
S.100s	SHED FOUNDATION AND FRAMING PLANS
S.110c	CRAFTSMAN CEILING FRAMING PLAN
S.110g	GABLE (GABLE-STUCCO) CEILING FRAMING PLAN
S.110s	SHED CEILING FRAMING PLAN
S2 SERIES: BUILDING SECTIONS AND ELEVATIONS	
S.200c	CRAFTSMAN ELEVATIONS SECTIONS
S.200g	GABLE (GABLE-STUCCO) ELEVATIONS SECTIONS
S.200s	SHED ELEVATIONS SECTIONS

NOT FOR CONSTRUCTION
PLAN 3
22-1-ADU 003

ANX
AARON NEUBERT ARCHITECTS

ADU PROGRAM

OWNER:
CITY OF FRESNO
PLANNING AND DEVELOPMENT DEPARTMENT
2600 FRESNO STREET, 3RD FLOOR
FRESNO, CA 93721

ARCHITECT:
AARON NEUBERT ARCHITECTS, INC.
2814 ROWENA AVENUE, SUITE ONE
LOS ANGELES, CALIFORNIA 90039
P. 323.953.4700 F. 323.953.4900
AARON NEUBERT CA# C-29005

STRUCTURAL ENGINEER:
NOUS ENGINEERING, INC.
600 WILSHIRE BOULEVARD, SUITE 760
LOS ANGELES, CALIFORNIA 90017
P. 213.627.6687

MEP ENGINEER:
INNODEZ DESIGN AND ENGINEERING
726 FOXBROUGH PLACE
PLEASANTON, CALIFORNIA 94566
P. 424.414.0997

REVISION:	DATE:	COMMENT:
2 REVISION #2	06.03.22	PLAN CHECK CORRECTIONS
1 REVISION #1	04.01.22	PLAN CHECK CORRECTIONS

SEAL:
REGISTERED PROFESSIONAL ENGINEER
ELIZABETH MAHLOW
C80463
EXP 03/31/2023
CIVIL
STATE OF CALIFORNIA

Project No. 2104
ADU PROGRAM
CITY OF FRESNO
CALIFORNIA

DRAWING TITLE:
ADU 03
GENERAL NOTES & SHEET LIST

DATE: APRIL 1, 2022
SCALE: AS NOTED
DRAWN BY:

© Aaron Neubert Architects, INC. 2021

S.000

PLOTTED ON: 6/2/2022 1:58:28 PM
Autodesk Docs://21388 Fresno ADUs_R22/NE_21388 Fresno ADU 03_R22.rvt

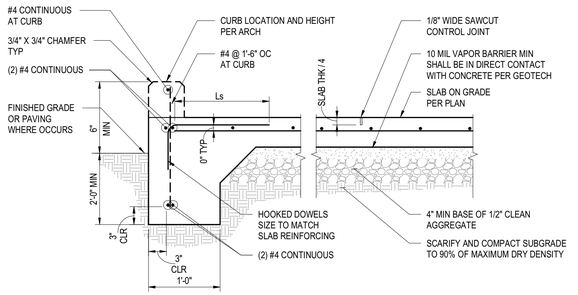

A EDGE OF SLAB ON GRADE

B SLAB-ON-GRADE

13 SLAB ON GRADE
NOT TO SCALE

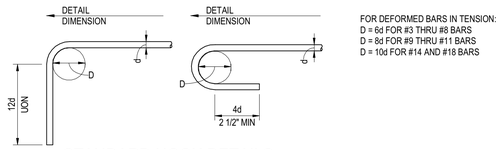

A STANDARD HOOK DETAILS

FOR DEFORMED BARS IN TENSION:
D = 6d FOR #3 THRU #8 BARS
D = 8d FOR #9 THRU #11 BARS
D = 10d FOR #14 AND #18 BARS

FOR STIRRUPS, TIES, AND HOOPS:
FOR #3 THRU #5 BARS: D = 4d, Lext = 6d, 3" MIN
FOR #6 THRU #8 BARS: D = 6d, Lext = 12d

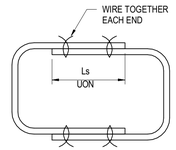

B TWO PIECE STRAIGHT BAR CLOSED STIRRUPS

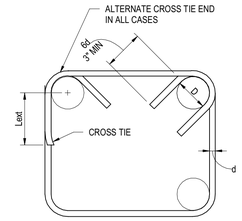

C TWO-PIECE BEAM TIE

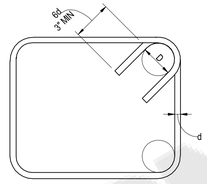

D BEAM AND COLUMN CLOSED TIE

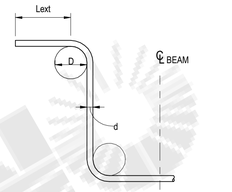

E BEAM & JOIST STIRRUP

10 BAR BENDING DETAIL
NOT TO SCALE

EMBED SCHEDULE	
HOLDOWN TYPE	FOUNDATION EMBED e
HDU4	12"
HDU5	12"
HDU8	15"

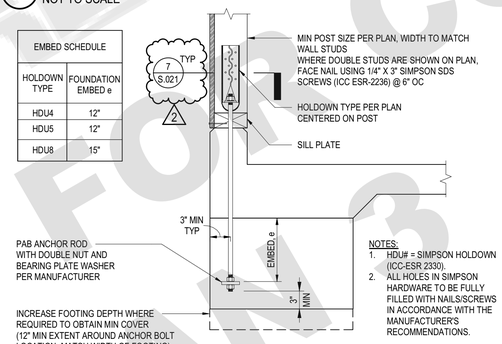

NOTES:
1. HDU# = SIMPSON HOLDOWN (ICC-ESR 2330).
2. ALL HOLES IN SIMPSON HARDWARE TO BE FULLY FILLED WITH NAILS/SCREWS IN ACCORDANCE WITH THE MANUFACTURER'S RECOMMENDATIONS.

11 SHEAR WALL HOLDOWN DETAIL
NOT TO SCALE

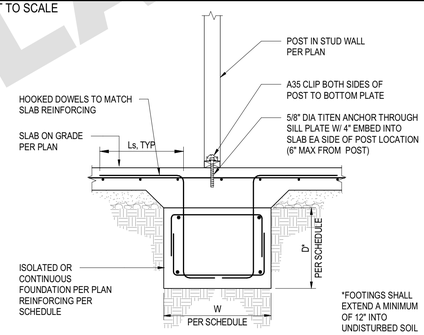

12 INTERIOR POST FOUNDATION
NOT TO SCALE

CONCRETE REINFORCING DEVELOPMENT & SPLICING LENGTHS (IN) FOR f'c = 2.5 KSI																													
CONDITION	CONCRETE TYPE	REINFORCING BAR SIZE																											
		#3			#4			#5			#6			#7			#8			#9			#10			#11		
		Ld	Ls	Ldh	Ld	Ls	Ldh	Ld	Ls	Ldh	Ld	Ls	Ldh	Ld	Ls	Ldh	Ld	Ls	Ldh	Ld	Ls	Ldh	Ld	Ls	Ldh	Ld	Ls	Ldh
THICKNESS OF FRESH CONCRETE PLACED BELOW HORIZONTAL REINFORCEMENT > 12"																													
A	NWC	15	19	7	19	25	10	24	31	12	29	37	14	41	54	17	47	61	19	53	69	21	60	78	24	66	86	27
B	NWC	24	31	7	32	41	10	39	51	12	47	61	14	69	89	17	78	102	19	88	115	21	100	129	24	110	143	27
C	NWC	36	46	7	47	61	10	59	77	12	71	92	14	103	134	17	117	153	19	132	172	21	149	194	24	165	215	27
THICKNESS OF FRESH CONCRETE PLACED BELOW HORIZONTAL REINFORCEMENT ≤ 12"																													
A	NWC	12	15	7	15	19	10	18	24	12	22	29	14	32	41	17	36	47	19	41	53	21	46	60	24	51	66	27
B	NWC	18	24	7	24	32	10	30	39	12	36	47	14	53	69	17	60	78	19	68	88	21	77	100	24	85	110	27
C	NWC	27	36	7	36	47	10	45	59	12	54	71	14	79	103	17	90	117	19	102	132	21	115	149	24	127	165	27

NOTES:
1. YIELD STRENGTH OF REINFORCEMENT = 60 KSI (TYPICAL)
2. UNCOATED OR ZINC-COATED (GALVANIZED) REINFORCEMENT
3. VALUES SHOWN FOR NORMAL WEIGHT CONCRETE ONLY, MULTIPLY BY 1.3 FOR LIGHTWEIGHT.
4. FOR GRADE 75 REINFORCEMENT MULPTIPL BY 1.25; FOR GRADE 80 REINFORCEMENT MULTIPLY BY 1.33.
5. MORE THAN 12" OF CONCRETE CAST BELOW THE BARS ARE MOST TOP BARS, LESS THAN 12" OF CONCRETE CAST BELOW HORIZONTAL BARS ARE ALL VERTICAL BARS AND MOST BOTTOM BARS.
6. Ld = DEVELOPMENT LENGTH (ACI 318-14 TABLE 25.4.2.2)
7. Ls = LAP SPLICE LENGTH (ACI 318-14 TABLE 25.5.2.1)
8. Ldh = HOOK DEVELOPMENT LENGTH (ACI 318-14 25.4.3)
9. WHEN SPLICING BARS OF DIFFERENT SIZE, USE THE GREATER OF Ld OF THE LARGER BAR AND Ls OF THE SMALLER BAR.
10. STAGGER SPLICES AS INDICATED ON DRAWINGS.

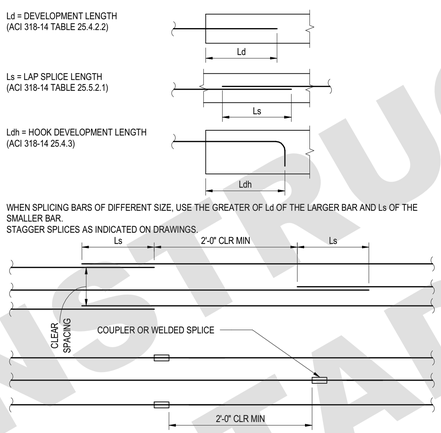

6 REINFORCING DEVELOPMENT & SPLICE LENGTHS
NOT TO SCALE

CONDITION A

CLEAR SPACING OF BARS OR WIRES BEING DEVELOPED OR LAP SPLICED ≥ 4d, CLEAR COVER ≥ 2d

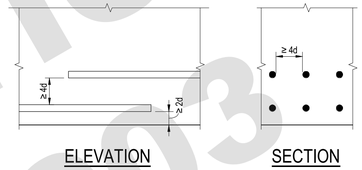

ELEVATION SECTION

CONDITION B

CLEAR SPACING OF BARS OR WIRES BEING DEVELOPED OR LAP SPLICED ≥ 2d, CLEAR COVER ≥ d

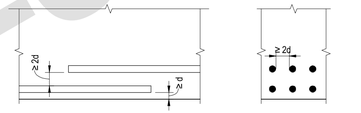

ELEVATION SECTION

CONDITION C

OTHER CASES - WHERE CLEAR SPACING OF BARS OR WIRES < 2d OR CLEAR COVER <d.

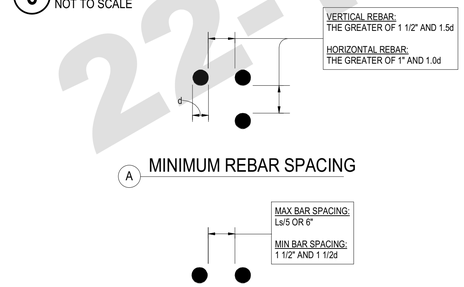

A MINIMUM REBAR SPACING

B BAR SPACING FOR BARS SPLICED WITH A NON-CONTACT LAP

7 BAR SPACING IN CONCRETE
NOT TO SCALE

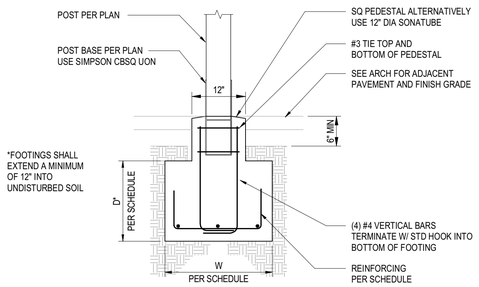

8 ISOLATED POST FOOTING
NOT TO SCALE

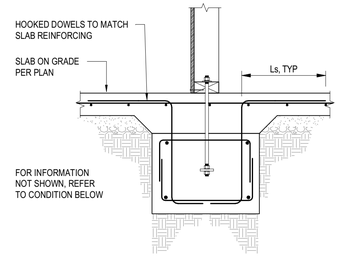

INTERIOR CONTINUOUS FOOTING

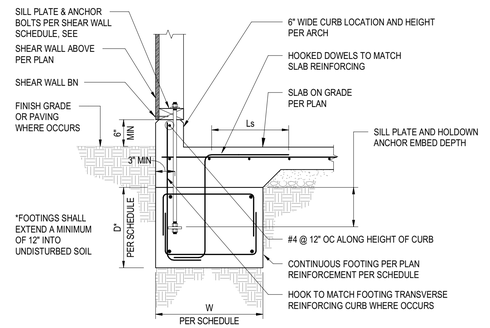

EXTERIOR CONTINUOUS FOOTING

4 CONTINUOUS FOOTING
NOT TO SCALE

NOT FOR CONSTRUCTION
FRESNO
City of
PLAN 3
22-803
ADU

AARON NEUBERT ARCHITECTS

ADU PROGRAM

OWNER:
CITY OF FRESNO
PLANNING AND DEVELOPMENT DEPARTMENT
2600 FRESNO STREET, 3RD FLOOR
FRESNO, CA 93721

ARCHITECT:
AARON NEUBERT ARCHITECTS, INC.
2814 ROWENA AVENUE, SUITE ONE
LOS ANGELES, CALIFORNIA 90039
P. 323.953.4700 F. 323.953.4900
AARON NEUBERT CA# C-29005

STRUCTURAL ENGINEER:
NOUS ENGINEERING, INC.
600 WILSHIRE BOULEVARD, SUITE 760
LOS ANGELES, CALIFORNIA 90017
P. 213.627.6687

MEP ENGINEER:
INNODEZ DESIGN AND ENGINEERING
726 FOXBROUGH PLACE
PLEASANTON, CALIFORNIA 94566
P. 424.414.0997

REVISION:	DATE:	COMMENT:
2	REVISION #2 06.03.22	PLAN CHECK CORRECTIONS
1	REVISION #1 04.01.22	PLAN CHECK CORRECTIONS

SEAL:

REGISTERED PROFESSIONAL ENGINEER
ELIZABETH MAHLOW
C80463
EXP 03/31/2023
CIVIL
STATE OF CALIFORNIA

Project No. 2104

ADU PROGRAM
CITY OF FRESNO
CALIFORNIA

DRAWING TITLE:

ADU 03
TYPICAL CONCRETE DETAILS

DATE: APRIL 1, 2022
SCALE: AS NOTED
DRAWN BY:

© Aaron Neubert Architects, INC. 2021

S.010

PLOTTED ON: 6/3/2022 1:58:32 PM
Autodesk Docs://21366 Fresno ADUs_R22/NE_21366 Fresno ADU3_R22.rvt

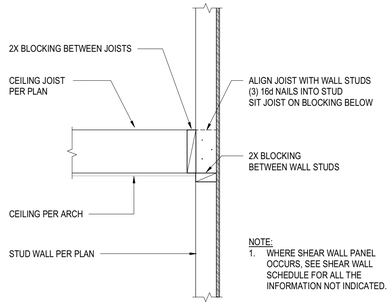

13 CEILING JOIST PERPENDICULAR TO WALL
NOT TO SCALE

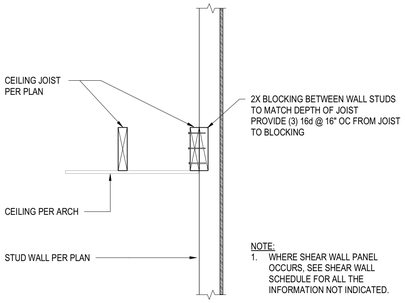

14 CEILING JOIST PARALLEL TO WALL
NOT TO SCALE

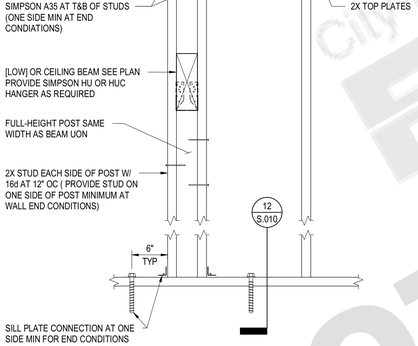

15 LOW BEAM PERPENDICULAR TO WALL
NOT TO SCALE

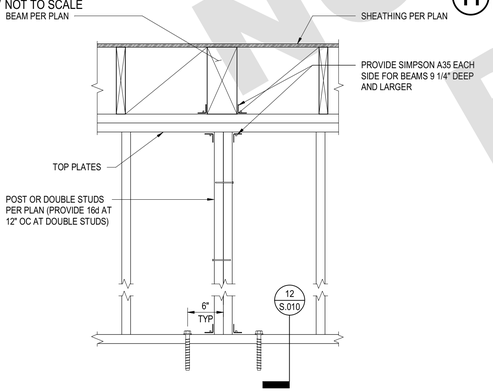

16 FLUSH BEAM PERPENDICULAR TO WALL
NOT TO SCALE

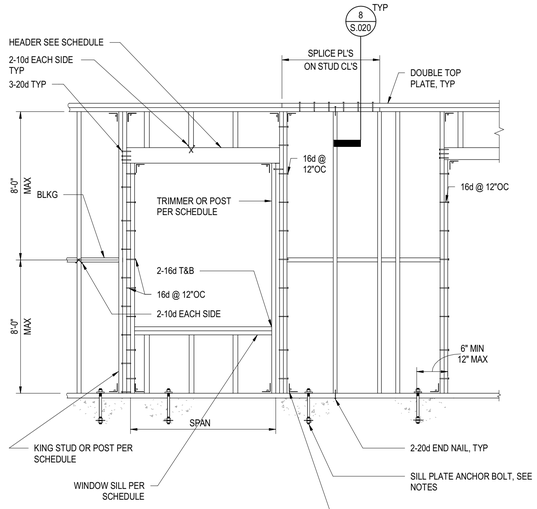

ELEVATION

NOTES:
1. SILL PLATE ANCHOR BOLT TO BE 5/8" DIA. WITH 3"X3"X0.229" STEEL PLATE WASHER AND 0'-8" MIN EMBED AT 4'-0" OC UON.
2. SILL PLATE ANCHOR BOLTS TO BE 6" MIN./12" MAX. FROM END OF SILL PLATE. MINIMUM (2) BOLTS PER PLATE.
3. NOTCHES TO SILL PER DETAIL
4. AT NON BEARING WALLS, ACCEPTABLE TO REPLACE ANCHOR BOLTS WITH SIMPSON PDPW-300 @ 24"OC (ICC-ESR 2138). POWDER DRIVEN FASTENERS SHALL NOT BE USED IN STEM WALLS LESS THAN 5 1/2" WIDE OR GREATER THAN 5 /2" HIGH.
5. STUD SIZE AND SPACING PER STUD WALL SCHEDULE (2X4 @ 16"OC OR 2X6 @ 16"OC MINIMUM)
6. SILL PLATE ANCHOR BOLTS SHALL BE LOCATED IN THE MIDDLE THIRD WIDTH OF THE SILL PLATE.
7. IF FINGER JOINTED STUDS ARE USED, STUDS MUST BE GRADE STAMPED BY AN APPROVED ICC INSPECTION AGENCY AND CLEARLY SPECIFIED ON PLANS.
8. SILL PLATES ON MASONRY OR CONCRETE SHALL BE PRESSURE TREATED AND 3X MIN.

WALL STUD SCHEDULE		
LEVEL	STUD DEPTH	STUD REQUIREMENT
ALL FLOORS	5 1/2"	2X6 @ 16"OC

KING/TRIMMER SCHEDULE UON		
KING	TRIMMER	SPAN
2X OR POST	2X	<= 4'-0"
(2)-2X OR POST	(2)-2X	<= 8'-0"
(3)-2X	(3)-2X OR POST	> 8'-0"

WINDOW SILL SCHEDULE	
SILL MEMBER	SILL SPAN
2X	<=4'-0"
(2)-2X	<=8'-0"
4X	<=12'-0"
6X	<=15'-0"

HEADER SCHEDULE (UON ON DRAWINGS)						
MAX OPENING SIZE	LOAD BEARING HEADER				NON-LOAD BEARING HEADER	
	HEADER SIZE AT FLOOR		HEADER SIZE AT ROOF		HEADER SZ. AT FLR. AND RF.	
	4" WALL	6" WALL	4" WALL	6" WALL	4" WALL	6" WALL
4'-0"	4X8	6X6	4X6	6X6	4X4	4X6 FLAT
6'-0"	4X10	6X8	4X8	6X6	4X4	6X6
8'-0"	3 1/2 X 11 7/8 LVL	6X10	4X10	6X8	4X6	6X6

11 STUD WALL FRAMING
NOT TO SCALE

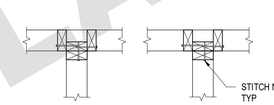

B PLAN AT INTERSECTIONS

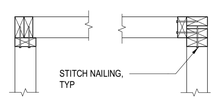

A PLAN AT CORNERS

12 STUD WALL CORNERS AND INTERSECTIONS
NOT TO SCALE

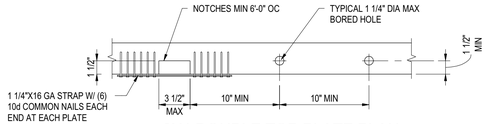

C 2X4 DOUBLE TOP PLATE PLAN
2X4 OR 3X4 SILL PLATE SIMILAR

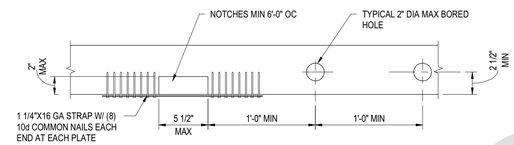

B 2X6 DOUBLE TOP PLATE PLAN
2X6 OR 3X6 SILL PLATE SIMILAR

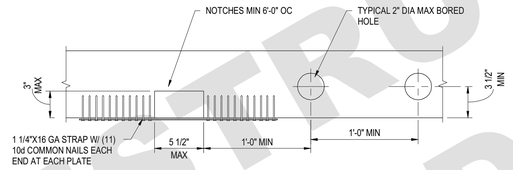

A 2X8 DOUBLE TOP PLATE PLAN
2X8 OR 3X8 SILL PLATE SIMILAR

6 PENETRATIONS IN TOP OR BOTTOM PLATE
NOT TO SCALE

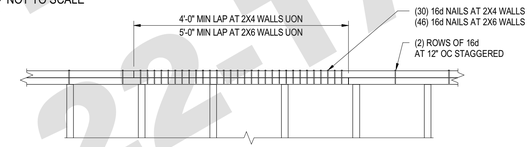

OR

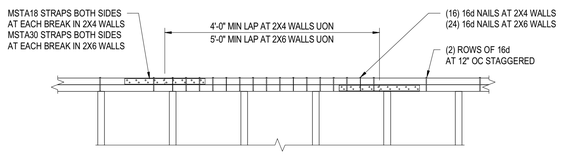

7 TOP PLATE SPLICE
NOT TO SCALE

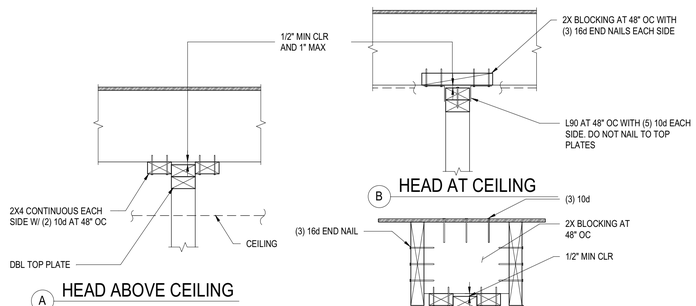

A HEAD ABOVE CEILING

B HEAD AT CEILING

C HEAD

8 JOIST AT STUD WALL (NON-BEARING)
NOT TO SCALE

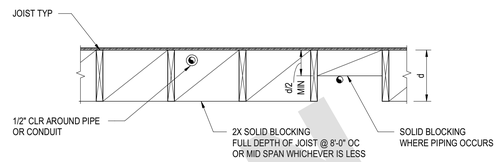

1 WOOD JOIST BLOCKING
NOT TO SCALE

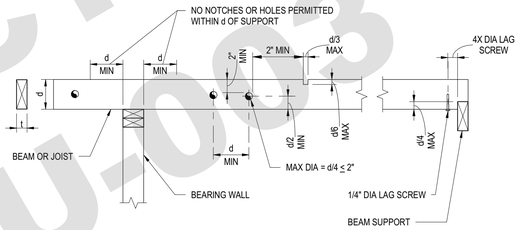

NOTES:
1. HOLES & NOTCHES NOT PERMITTED FOR d=5 1/2" OR LESS.
2. NOTCHES NOT PERMITTED WITHIN MIDDLE THIRD OF SPAN.
3. NOTCHES NOT PERMITTED IN BOTTOM OF MEMBER UNLESS SPECIFICALLY SHOWN ON THE STRUCTURAL DRAWINGS OR WRITTEN APPROVAL IS OBTAINED FROM THE OWNER'S REPRESENTATIVE.

2 HOLES AND NOTCHES IN BEAMS AND JOISTS
NOT TO SCALE

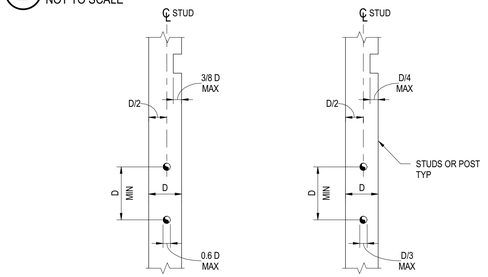

A NON-LOAD BEARING

B LOAD BEARING

NOTES:
1. NOTCHING OF MEMBER IS NOT PERMITTED WITHOUT WRITTEN APPROVAL FROM THE OWNER'S REPRESENTATIVE.
2. DO NOT PLACE HOLES IN MEMBERS WITH HOLDOWN ANCHORS.
3. BORED HOLES SHALL NOT BE LOCATED AT THE SAME SECTION OF STUD AS A NOTCH.

3 HOLES AND NOTCHES IN STUDS OR POSTS
NOT TO SCALE

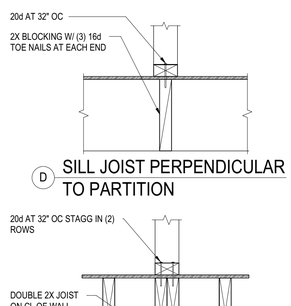

D SILL JOIST PERPENDICULAR TO PARTITION

E SILL JOIST PARALLEL TO PARTITION

FREE CONSTRUCTION PLANS
NOT FOR CONSTRUCTION
2215 ADU-03
City of Fresno

PLOTTED ON: 6/2/2022 1:56:35 PM
Autodesk Docs://21306 Fresno ADUs_R23/NE_21306 Fresno ADU 03_R22.rvt

ANX
AARON NEUBERT ARCHITECTS

ADU PROGRAM

OWNER:
CITY OF FRESNO
PLANNING AND DEVELOPMENT DEPARTMENT
2600 FRESNO STREET, 3RD FLOOR
FRESNO, CA 93721

ARCHITECT:
AARON NEUBERT ARCHITECTS, INC.
2814 ROWENA AVENUE, SUITE ONE
LOS ANGELES, CALIFORNIA 90039
P. 323.953.4700 F. 323.953.4900
AARON NEUBERT CA# C-29005

STRUCTURAL ENGINEER:
NOUS ENGINEERING, INC.
600 WILSHIRE BOULEVARD, SUITE 760
LOS ANGELES, CALIFORNIA 90017
P. 213.627.6687

MEP ENGINEER:
INNODEZ DESIGN AND ENGINEERING
726 FOXBROUGH PLACE
PLEASANTON, CALIFORNIA 94566
P. 424.414.0997

REVISION:	DATE:	COMMENT:
2	REVISION #2 06.03.22	PLAN CHECK CORRECTIONS
1	REVISION #1 04.01.22	PLAN CHECK CORRECTIONS

SEAL:
REGISTERED PROFESSIONAL ENGINEER ELIZABETH MAHLOW C80463 EXP 03/31/2023 CIVIL STATE OF CALIFORNIA

Project No. 2104
ADU PROGRAM
CITY OF FRESNO
CALIFORNIA

DRAWING TITLE:
ADU 03
TYPICAL WOOD DETAILS - GENERAL AND STUD WALLS

DATE: APRIL 1, 2022
SCALE: AS NOTED
DRAWN BY:

© Aaron Neubert Architects, INC. 2021

S.020

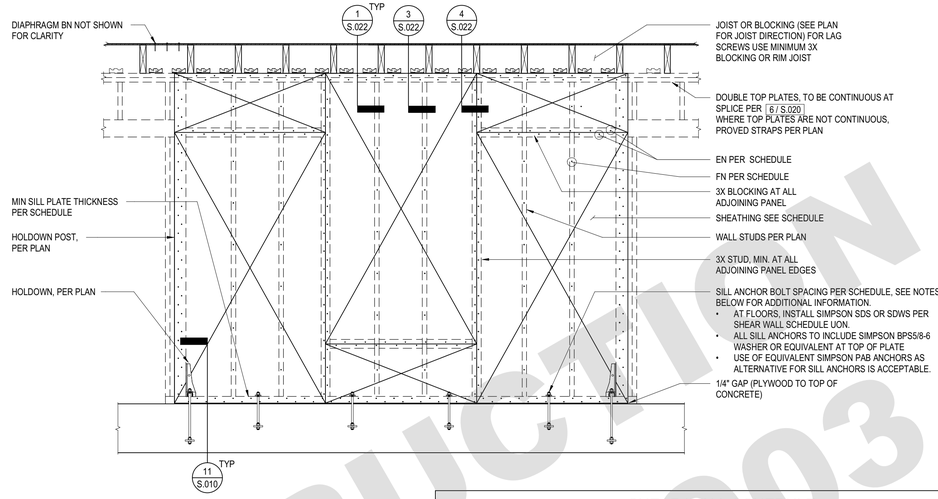

NOTES:
1. REFER TO ROUGH CARPENTRY NOTES FOR ADDITIONAL FRAMING REQUIREMENTS.
2. REFER TO PLAN & SHEAR WALL LEGEND FOR SHEAR WALL TYPE.
3. PLYWOOD FACE GRAIN TO BE VERTICAL.
4. SHEATHING FOR SINGLE-SIDED SHEAR WALLS MAY BE PLACED ON EITHER FACE OF WALL UON. PROVIDE MINIMUM LENGTH SPECIFIED ON PLAN AND COORDINATE WITH ARCHITECTURAL FINISHES.
5. NAILING SHALL BE 10d COMMON WITH 1 1/2" MINIMUM PENETRATION. NAILING SHALL BE 1/2" DISTANCE FROM PANEL EDGE AND 3/8" DISTANCE FROM EDGE OF CONNECTING MEMBERS.
6. PLYWOOD JOINT AND SILL NAILING SHALL BE STAGGERED IN ALL CASES.
7. WHEN SHEATHING IS APPLIED ON BOTH SIDES OF STUDS, NAILS ON EACH SIDE OF SHEATHING JOINT, SILL PLATES, HOLDOWN POSTS AND TOP PLATES SHALL BE STAGGERED.
8. PLYWOOD PANELS SHALL ABUT ALONG CENTERLINES OF FRAMING MEMBERS. THE MINIMUM PLYWOOD DIMENSION FOR USE SHALL BE 12".
9. A35 OR LTP4 SHEAR TRANSFER SHALL BE CONNECTING TO PLATE AND BLOCKING, JOIST OR RAFTER.
10. SILL PLATES ON MASONRY OR CONCRETE SHALL BE PRESSURE TREATED AND 3X MIN.
11. SEE PLAN AND TYPICAL DETAILS FOR SPECIFIC SHEAR CONNECTION DETAILS.
12. AT ALL EXTERIOR AND INTERIOR BEARING WALLS NOT NOTED AS SHEAR WALLS, BLOCKING SHALL BE PROVIDED BETWEEN JOISTS AND/OR RAFTERS WITH A35, LTP4, OR LTP5 TO TOP PLATES AT 16"OC AT FLOOR AND 24"OC AT ROOF CONDITIONS UON.
13. SILL PLATE ANCHOR BOLTS SHALL BE LOCATED IN THE MIDDLE THIRD WIDTH OF THE SILL PLATE.
14. WOOD STRUCTURAL PANELS SHALL NOT BE LESS THAN 4'-0" X 8'-0" EXCEPT AT BOUNDARIES AND CHANGES IN FRAMING WHERE MINIMUM PANEL DIMENSION SHALL BE 24" UNLESS ALL EDGES OF THE UNDERSIZED PANELS ARE SUPPORTED BY AND FASTENED TO FRAMING MEMBERS OR BLOCKING.

SHEAR WALL SCHEDULE

SHEAR WALL TYPE	PLYWOOD PANEL			NAILING SIZE (BN, EN, FN)	MIN SILL THK	SILL PLATE ANCHOR TO CONCRETE FTG	1/4"X6" SIMPSON SDS (ICC ESR-2236) OR 5" SIMPSON SDWS (UES ER-192)	A35 OR LTP4 FRAMING CLIPS	SHEAR CAPACITY (PLF)
	APA RATED PLYWOOD								
	THK	TYPE				SIZE & SPACING			
A	15/32"	STRUCT I	ONE SIDE	10d@ 6",6",12"	3X	5/8" DIA X 8" EMBED @ 32"OC	AT 12" OC	AT 12" OC ONE SIDE	340
B	15/32"	STRUCT I	ONE SIDE	10d@ 4",4",12"	3X	5/8" DIA X 8" EMBED @ 32"OC	AT 8" OC	AT 10" OC ONE SIDE	510
C	15/32"	STRUCT I	ONE SIDE	10d@ 3",3",12"	3X	5/8" DIA X 8" EMBED @ 24"OC	AT 6" OC	AT 8" OC ONE SIDE	665
D	15/32"	STRUCT I	ONE SIDE	10d@ 2",2",12"	3X	5/8" DIA X 8" EMBED @ 24"OC	AT 4" OC	AT 6" OC ONE SIDE	870
E	15/32"	STRUCT I	TWO SIDES	10d@ 3",3",12"	3X	5/8" DIA X 8" EMBED @ 12"OC	AT 3" OC	AT 8" OC TWO SIDES	1330

6 SHEAR WALL ELEVATION
NOT TO SCALE

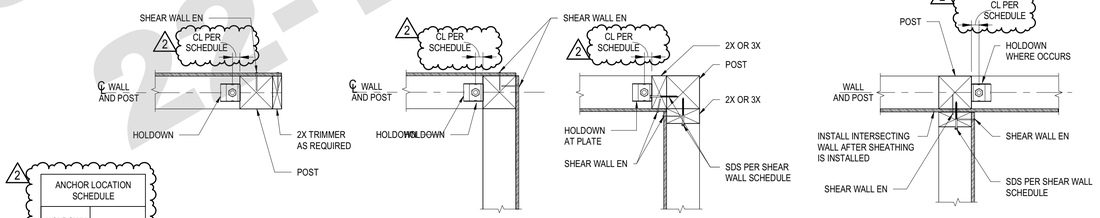

2

ANCHOR LOCATION SCHEDULE	
HOLDOWN TYPE	CL
HDU4	1 5/16"
HDU5	1 5/16"
HDU8	1 3/8"

A END OF WALL
B CORNER
E CORNER
D INTERSECTION

7 SHEAR WALL CORNER AND INTERSECTION FRAMING
NOT TO SCALE

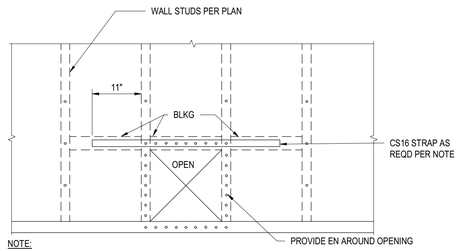

NOTE:
1. CS16 STRAP IS REQUIRED WHEN:
   A. THE PENETRATION IS LARGER THEN 25% OF WALL LENGTH.
   B. THE PENETRATIONS ARE CLOSER THAN 32" OC.
   C. A SECOND HORIZONTAL STRAP IS REQUIRED AT THE BOTTOM OF OPENING WHEN BOTTOM OF OPENING IS NOT AT BOTTOM PLATE.
      - 16X16 MAXIMUM OPENING SIZE.
      - BLOCKING AND STRAPS NOT REQUIRED WHEN PENETRATION IS LESS THAN OR EQUAL TO 6"
      - AND SPACED AT 2 OR MORE STUD BAYS.

8 SHEAR WALL PENETRATION (16"X16")
NOT TO SCALE

CITY OF FRESNO
NOT FOR CONSTRUCTION
PLAN CHECK-APR 2003
22-1

ANX
AARON NEUBERT ARCHITECTS

ADU PROGRAM

OWNER:
CITY OF FRESNO
PLANNING AND DEVELOPMENT DEPARTMENT
2600 FRESNO STREET, 3RD FLOOR
FRESNO, CA 93721

ARCHITECT:
AARON NEUBERT ARCHITECTS, INC.
2814 ROWENA AVENUE, SUITE ONE
LOS ANGELES, CALIFORNIA 90039
P. 323.953.4700 F. 323.953.4900

AARON NEUBERT CA# C-29005

STRUCTURAL ENGINEER:
NOUS ENGINEERING, INC.
600 WILSHIRE BOULEVARD, SUITE 760
LOS ANGELES, CALIFORNIA 90017
P. 213.627.6687

MEP ENGINEER:
INNODEZ DESIGN AND ENGINEERING
726 FOXBROUGH PLACE
PLEASANTON, CALIFORNIA 94566
P. 424.414.0997

REVISION: DATE: COMMENT:
2 REVISION #2 06.03.22 PLAN CHECK CORRECTIONS
1 REVISION #1 04.01.22 PLAN CHECK CORRECTIONS

SEAL:
REGISTERED PROFESSIONAL ENGINEER ★ ELIZABETH MAHLOW ★ C80463 EXP 03/31/2023 ★ CIVIL ★ STATE OF CALIFORNIA ★

Project No. 2104
ADU PROGRAM
CITY OF FRESNO
CALIFORNIA

DRAWING TITLE:
ADU 03
TYPICAL WOOD DETAILS - SHEAR WALLS

DATE: APRIL 1, 2022
SCALE: AS NOTED
DRAWN BY:

© Aaron Neubert Architects, INC. 2021

S.021

PLOTTED ON: 6/7/2022 1:58:39 PM
Autodesk Docs://21368 Fresno ADUs_RZONE_21368 Fresno ADU 03_R22.rvt

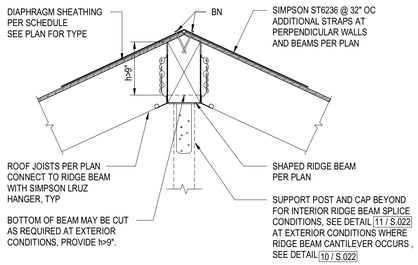

ALIGNED RIDGE BEAM

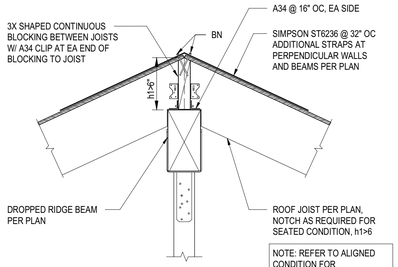

DROPPED RIDGE BEAM

14 ROOF RAFTERS TO RIDGE BEAM
NOT TO SCALE

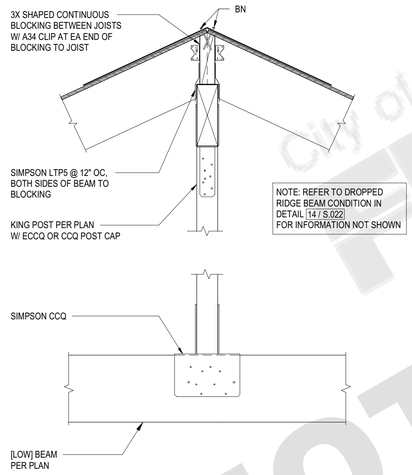

15 RIDGE BEAM TO KING POST
NOT TO SCALE

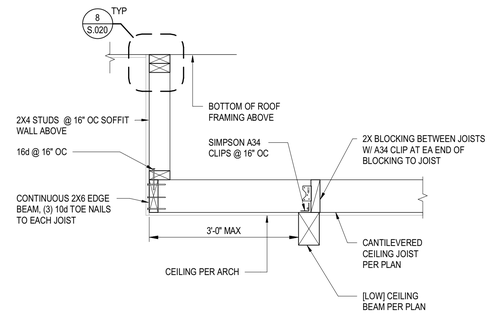

9 CEILING JOIST AT LOW BEAM
NOT TO SCALE

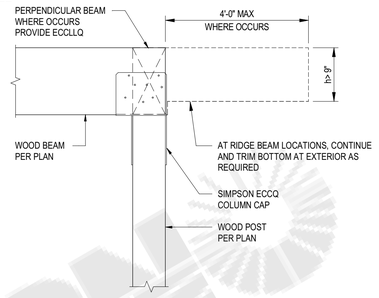

10 WOOD POST TO WOOD BEAM (CORNER/END)
NOT TO SCALE

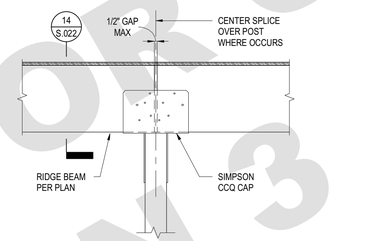

11 POST TO RIDGE BEAM
NOT TO SCALE

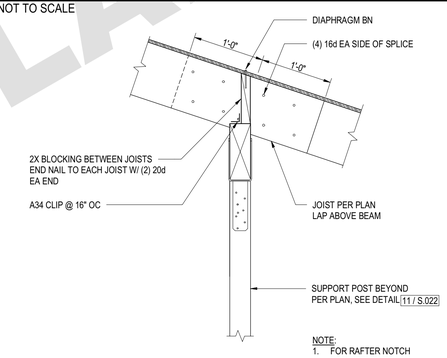

12 JOIST AT [LOW] BEAM SUPPORT (SHED)
NOT TO SCALE

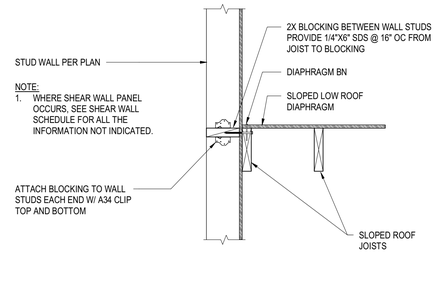

5 LOW ROOF AT EXTERIOR WALL
NOT TO SCALE

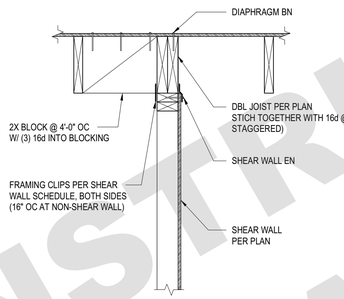

6 INTERIOR ROOF SHEAR TRANSFER (JOISTS PARALLEL)
NOT TO SCALE

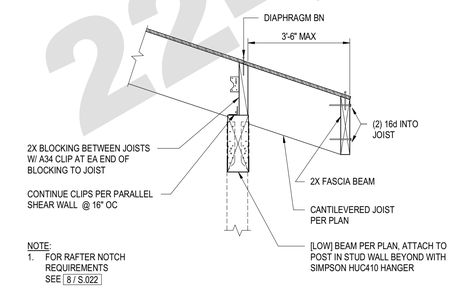

7 JOIST AT [LOW] BEAM SUPPORT
NOT TO SCALE

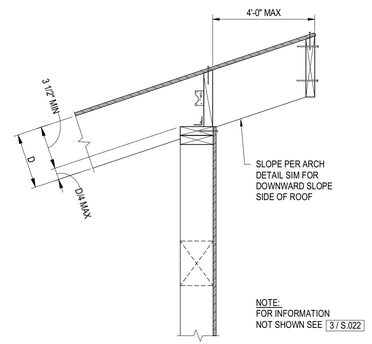

8 JOIST PERPENDICULAR TO SHEAR WALL AT EXTERIOR (SHED)
NOT TO SCALE

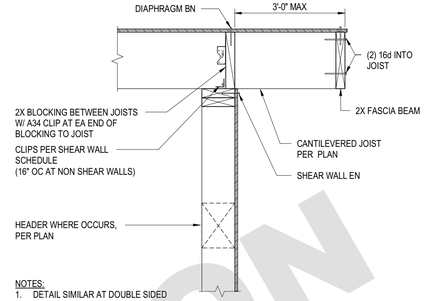

1 JOIST PERPENDICULAR TO SHEAR WALL AT EXTERIOR
NOT TO SCALE

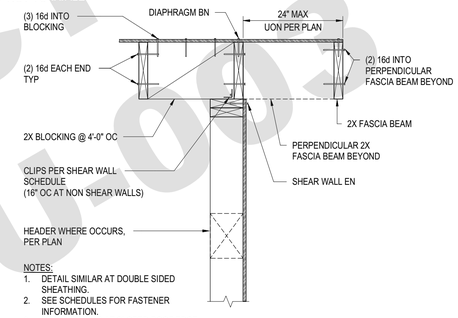

2 JOIST PARALLEL TO SHEAR WALL AT EXTERIOR
NOT TO SCALE

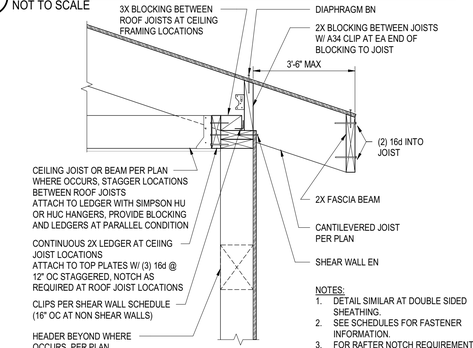

3 JOIST PERPENDICULAR TO SHEAR WALL AT EXTERIOR
NOT TO SCALE

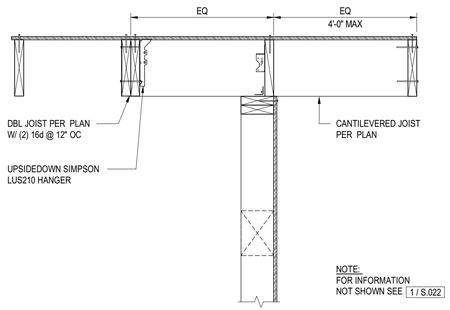

4 JOIST PERPENDICULAR TO SHEAR WALL AT EXTERIOR (CANTILEVER)
NOT TO SCALE

CITY OF FRESNO
NOT FOR CONSTRUCTION
22-1ADU003
PLAN 3

ANX
AARON NEUBERT ARCHITECTS

ADU PROGRAM

OWNER:
CITY OF FRESNO
PLANNING AND DEVELOPMENT DEPARTMENT
2600 FRESNO STREET, 3RD FLOOR
FRESNO, CA 93721

ARCHITECT:
AARON NEUBERT ARCHITECTS, INC.
2814 ROWENA AVENUE, SUITE ONE
LOS ANGELES, CALIFORNIA 90039
P. 323.953.4700 F. 323.953.4900

AARON NEUBERT CA# C-29005

STRUCTURAL ENGINEER:
NOUS ENGINEERING, INC.
600 WILSHIRE BOULEVARD, SUITE 760
LOS ANGELES, CALIFORNIA 90017
P. 213.627.6687

MEP ENGINEER:
INNODEZ DESIGN AND ENGINEERING
726 FOXBROUGH PLACE
PLEASANTON, CALIFORNIA 94566
P. 424.414.0997

REVISION:	DATE:	COMMENT:
2	REVISION #2 06.03.22	PLAN CHECK CORRECTIONS
1	REVISION #1 04.01.22	PLAN CHECK CORRECTIONS

SEAL:



Project No. 2104

ADU PROGRAM

CITY OF FRESNO
CALIFORNIA

DRAWING TITLE:

ADU 03
TYPICAL WOOD DETAILS - SHEAR WALL AND ROOF CONNECTIONS

DATE: APRIL 1, 2022

SCALE: AS NOTED

DRAWN BY:

S.022

© Aaron Neubert Architects, INC. 2021

PLOTTED ON: 6/2/2022 1:58:43 PM
Autodesk Docs://21088 Fresno ADUs_R23/NE_21088 Fresno ADU 03_R22.rvt

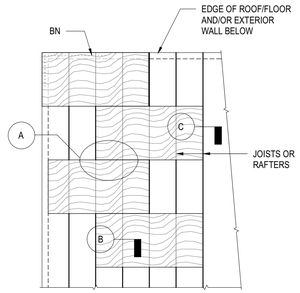

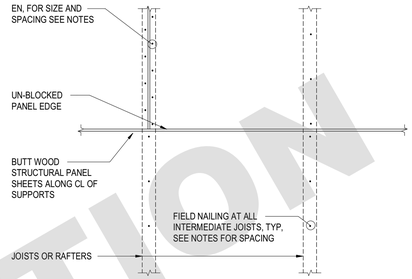

A PLAN VIEW

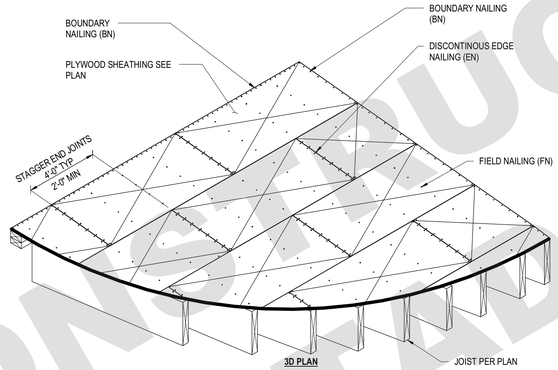

3D PLAN

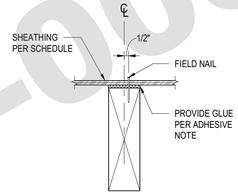

B SECTION

NOTES:
1. WOOD STRUCTURAL PANELS SHALL NOT BE LESS THAN 4'-0" X 8'-0" EXCEPT AT BOUNDARIES AND CHANGES IN FRAMING WHERE MINIMUM PANEL DIMENSION SHALL BE 24" UNLESS ALL EDGES OF THE UNDERSIZED PANELS ARE SUPPORTED BY AND FASTENED TO FRAMING MEMBERS OR BLOCKING.
2. PLACE WOOD STRUCTURAL PANEL SHEET WITH FACE PLIES PERPENDICULAR TO JOISTS AND STAGGER 4'-0" EDGES AS SHOWN.
3. COORDINATE JOIST LAYOUT WITH 4'-0" MODULE AS RELATED TO STRUCTURAL 1 RATED SHEATHING EXPOSURE 1.
4. ADHESIVE (FLOOR SHEATHING ONLY): ADHESIVE SHALL CONFORM TO APA SPECIFICATION AFG-01 OR ASTM D3498, APPLIED IN ACCORDANCE WITH THE ADHESIVE MANUFACTURER'S RECOMMENDATIONS. IF OSB PANELS WITH SEALED SURFACES AND EDGES ARE TO BE USED, USE ONLY SOLVENT-BASED GLUES; CHECK WITH PANEL MANUFACTURER.
   EXECUTION:
   A. APPLY A BEAD OF GLUE ABOUT 1/4 INCH IN DIA TO ALL CONTACT/BEARING SURFACES. ON WIDE AREAS APPLY GLUE IN SERPENTINE PATTERN.
   B. APPLY TWO BEADS OF GLUE ON JOISTS WHERE PANEL ENDS BUTT.
   C. APPLY GLUE PROGRESSIVELY TO BUTTING EDGES OF PANELS AND INTO GROOVED EDGES OF TONGUE AND GROOVE PANELS AS WORK PROCEEDS. COMPLETE NAILING OF EACH PANEL BEFORE GLUE SETS.
5. AT INTERIOR SHEARWALL LOCATIONS, PROVIDE DOUBLE LINES OF DIAPHRAGM NAILING INTO TRANSFER BLOCKING OR TOP PLATES.

DIAPHRAGM SHEATHING SCHEDULE

DIAPH TYPE	SHEATHING	PANEL INDEX	NAILING					
			LINES OF FASTENERS	TYPE*	WIDTH OF NAILED FACE	BN	EN	FN
D1	15/32"	32/16	1	10d COMMON	2"	6"	6"	12"

* NAILING TO BE RING OR SPIRAL SHANK, FULL HEAD.

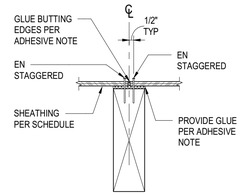

C SECTION

7 UNBLOCKED DIAPHRAGM SHEATHING SCHEDULE
NOT TO SCALE

City of FRESNO
NOT FOR CONSTRUCTION
PLAN 3 ADU-003

ANX
AARON NEUBERT ARCHITECTS

ADU PROGRAM

OWNER:
CITY OF FRESNO
PLANNING AND DEVELOPMENT DEPARTMENT
2600 FRESNO STREET, 3RD FLOOR
FRESNO, CA 93721

ARCHITECT:
AARON NEUBERT ARCHITECTS, INC.
2814 ROWENA AVENUE, SUITE ONE
LOS ANGELES, CALIFORNIA 90039
P. 323.953.4700 F. 323.953.4900
AARON NEUBERT CA# C-29005

STRUCTURAL ENGINEER:
NOUS ENGINEERING, INC.
600 WILSHIRE BOULEVARD, SUITE 760
LOS ANGELES, CALIFORNIA 90017
P. 213.627.6687

MEP ENGINEER:
INNODEZ DESIGN AND ENGINEERING
726 FOXBROUGH PLACE
PLEASANTON, CALIFORNIA 94566
P. 424.414.0997

REVISION: DATE: COMMENT:
2 REVISION #2 06.03.22 PLAN CHECK CORRECTIONS
1 REVISION #1 04.01.22 PLAN CHECK CORRECTIONS

SEAL:
REGISTERED PROFESSIONAL ENGINEER ELIZABETH MARLOW C80463 EXP 03/31/2023 CIVIL STATE OF CALIFORNIA

Project No. 2104
ADU PROGRAM
CITY OF FRESNO
CALIFORNIA

DRAWING TITLE:
ADU 03
TYPICAL WOOD DETAILS - DIAPHRAGMS

DATE: APRIL 1, 2022
SCALE: AS NOTED
DRAWN BY:

© Aaron Neubert Architects, INC. 2021

S.023

PLOTTED ON: 6/3/2022 1:58:45 PM
Autodesk Docs://21368 Fresno ADUs_R22NE_21368 Fresno ADU_03_R22.rvt

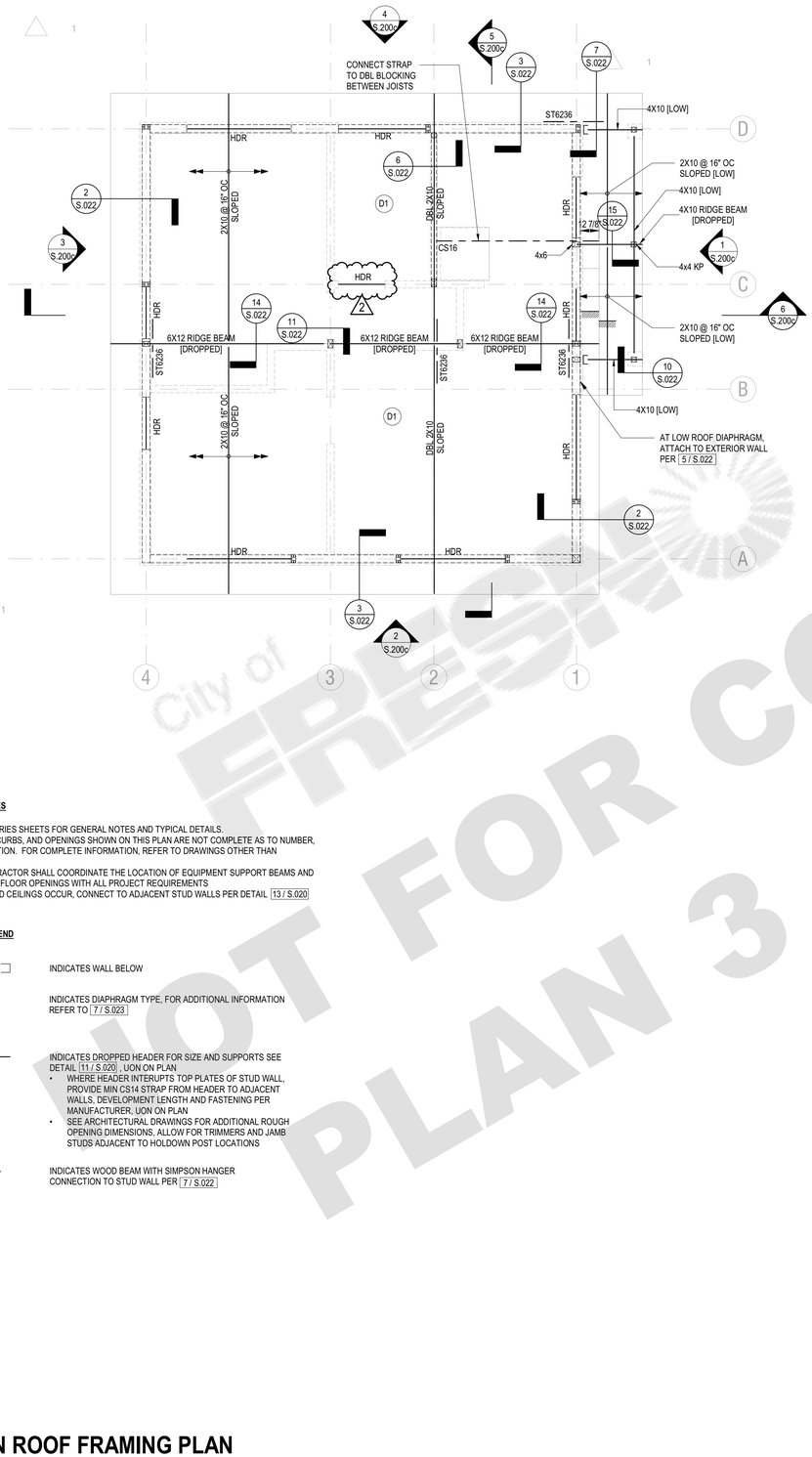

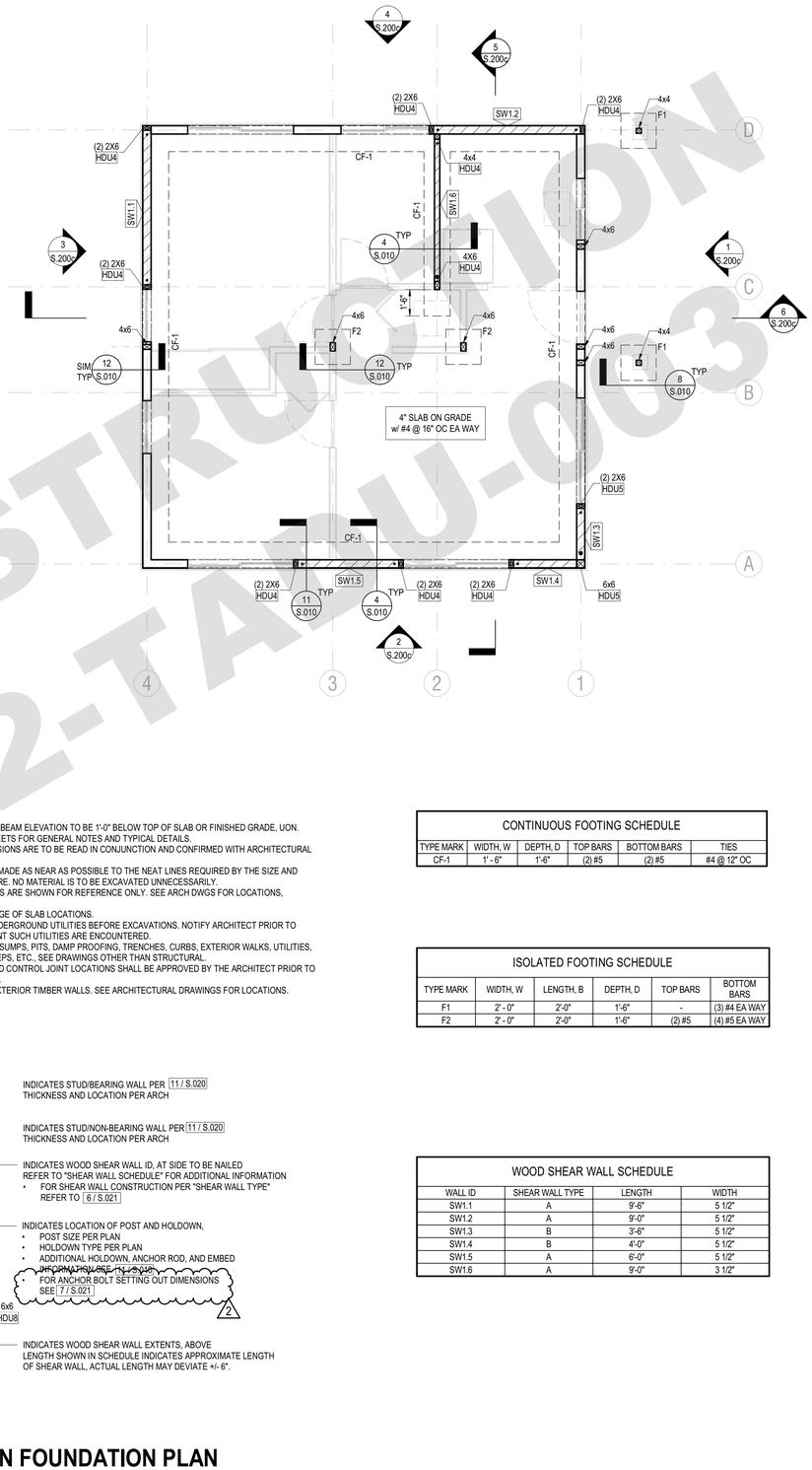

FRAMING PLAN NOTES

1. REFER TO S0 SERIES SHEETS FOR GENERAL NOTES AND TYPICAL DETAILS.
2. DEPRESSIONS, CURBS, AND OPENINGS SHOWN ON THIS PLAN ARE NOT COMPLETE AS TO NUMBER, SIZE, AND LOCATION. FOR COMPLETE INFORMATION, REFER TO DRAWINGS OTHER THAN STRUCTURAL.
3. GENERAL CONTRACTOR SHALL COORDINATE THE LOCATION OF EQUIPMENT SUPPORT BEAMS AND BEAMS AROUND FLOOR OPENINGS WITH ALL PROJECT REQUIREMENTS
4. WHERE DROPPED CEILINGS OCCUR, CONNECT TO ADJACENT STUD WALLS PER DETAIL 13 / S.020 AND 14 / S.020

FRAMING PLAN LEGEND

INDICATES WALL BELOW

D1 — INDICATES DIAPHRAGM TYPE, FOR ADDITIONAL INFORMATION REFER TO 7 / S.023

HDR — INDICATES DROPPED HEADER FOR SIZE AND SUPPORTS SEE DETAIL 11 / S.020 , UON ON PLAN
- WHERE HEADER INTERUPTS TOP PLATES OF STUD WALL, PROVIDE MIN CS14 STRAP FROM HEADER TO ADJACENT WALLS, DEVELOPMENT LENGTH AND FASTENING PER MANUFACTURER, UON ON PLAN
- SEE ARCHITECTURAL DRAWINGS FOR ADDITIONAL ROUGH OPENING DIMENSIONS, ALLOW FOR TRIMMERS AND JAMB STUDS ADJACENT TO HOLDOWN POST LOCATIONS

INDICATES WOOD BEAM WITH SIMPSON HANGER CONNECTION TO STUD WALL PER 7 / S.022

2 CRAFTSMAN ROOF FRAMING PLAN
1/4" = 1'-0"

FOUNDATION PLAN NOTES

1. TOP OF FOOTING GRADE BEAM ELEVATION TO BE 1'-0" BELOW TOP OF SLAB OR FINISHED GRADE, UON.
2. REFER TO S0 SERIES SHEETS FOR GENERAL NOTES AND TYPICAL DETAILS.
3. ALL SETTING OUT DIMENSIONS ARE TO BE READ IN CONJUNCTION AND CONFIRMED WITH ARCHITECTURAL DRAWINGS.
4. EXCAVATIONS SHALL BE MADE AS NEAR AS POSSIBLE TO THE NEAT LINES REQUIRED BY THE SIZE AND SHAPE OF THE STRUCTURE. NO MATERIAL IS TO BE EXCAVATED UNNECESSARILY.
5. CURBS AND DEPRESSIONS ARE SHOWN FOR REFERENCE ONLY. SEE ARCH DWGS FOR LOCATIONS, HEIGHT, AND THICKNESS.
6. SEE ARCH DWGS FOR EDGE OF SLAB LOCATIONS.
7. VERIFY LOCATION OF UNDERGROUND UTILITIES BEFORE EXCAVATIONS. NOTIFY ARCHITECT PRIOR TO EXCAVATION IN THE EVENT SUCH UTILITIES ARE ENCOUNTERED.
8. FOR DRAINAGE DETAILS, SUMPS, PITS, DAMP PROOFING, TRENCHES, CURBS, EXTERIOR WALKS, UTILITIES, EQUIPMENT DETAILS, STEPS, ETC., SEE DRAWINGS OTHER THAN STRUCTURAL.
9. SLAB CONSTRUCTION AND CONTROL JOINT LOCATIONS SHALL BE APPROVED BY THE ARCHITECT PRIOR TO PLACING ANY CONCRETE.
10. PROVIDE A 6" CURB AT EXTERIOR TIMBER WALLS. SEE ARCHITECTURAL DRAWINGS FOR LOCATIONS.

FOUNDATION PLAN LEGEND

INDICATES STUD/BEARING WALL PER 11 / S.020 THICKNESS AND LOCATION PER ARCH

INDICATES STUD/NON-BEARING WALL PER 11 / S.020 THICKNESS AND LOCATION PER ARCH

INDICATES WOOD SHEAR WALL ID, AT SIDE TO BE NAILED REFER TO "SHEAR WALL SCHEDULE" FOR ADDITIONAL INFORMATION
- FOR SHEAR WALL CONSTRUCTION PER "SHEAR WALL TYPE" REFER TO 6 / S.021

INDICATES LOCATION OF POST AND HOLDOWN,
- POST SIZE PER PLAN
- HOLDOWN TYPE PER PLAN
- ADDITIONAL HOLDOWN, ANCHOR ROD, AND EMBED INFORMATION SEE 7 / S.021
- FOR ANCHOR BOLT SETTING OUT DIMENSIONS SEE 7 / S.021

INDICATES WOOD SHEAR WALL EXTENTS, ABOVE LENGTH SHOWN IN SCHEDULE INDICATES APPROXIMATE LENGTH OF SHEAR WALL, ACTUAL LENGTH MAY DEVIATE +/- 6".

1 CRAFTSMAN FOUNDATION PLAN
1/4" = 1'-0"

CONTINUOUS FOOTING SCHEDULE

TYPE MARK	WIDTH, W	DEPTH, D	TOP BARS	BOTTOM BARS	TIES
CF-1	1' - 6"	1'-6"	(2) #5	(2) #5	#4 @ 12" OC

ISOLATED FOOTING SCHEDULE

TYPE MARK	WIDTH, W	LENGTH, B	DEPTH, D	TOP BARS	BOTTOM BARS
F1	2' - 0"	2'-0"	1'-6"	-	(3) #4 EA WAY
F2	2' - 0"	2'-0"	1'-6"	(2) #5	(4) #5 EA WAY

WOOD SHEAR WALL SCHEDULE

WALL ID	SHEAR WALL TYPE	LENGTH	WIDTH
SW1.1	A	9'-6"	5 1/2"
SW1.2	A	9'-0"	5 1/2"
SW1.3	B	3'-6"	5 1/2"
SW1.4	B	4'-0"	5 1/2"
SW1.5	A	6'-0"	5 1/2"
SW1.6	A	9'-0"	3 1/2"

CONSTRUCTION
NOT FOR
PLAN 3
22-TAU-003
City of FRESNO

ANX
AARON NEUBERT ARCHITECTS

ADU PROGRAM

OWNER:
CITY OF FRESNO
PLANNING AND DEVELOPMENT DEPARTMENT
2600 FRESNO STREET, 3RD FLOOR
FRESNO, CA 93721

ARCHITECT:
AARON NEUBERT ARCHITECTS, INC.
2814 ROWENA AVENUE, SUITE ONE
LOS ANGELES, CALIFORNIA 90039
P. 323.953.4700 F. 323.953.4900
AARON NEUBERT CA# C-29005

STRUCTURAL ENGINEER:
NOUS ENGINEERING, INC.
600 WILSHIRE BOULEVARD, SUITE 760
LOS ANGELES, CALIFORNIA 90017
P. 213.627.6687

MEP ENGINEER:
INNODEZ DESIGN AND ENGINEERING
726 FOXBROUGH PLACE
PLEASANTON, CALIFORNIA 94566
P. 424.414.0997

REVISION: DATE: COMMENT:
2 REVISION #2 06.03.22 PLAN CHECK CORRECTIONS
1 REVISION #1 04.01.22 PLAN CHECK CORRECTIONS

SEAL:
REGISTERED PROFESSIONAL ENGINEER ELIZABETH MARION C80463 EXP 03/31/2023 CIVIL STATE OF CALIFORNIA

Project No. 2104
ADU PROGRAM
CITY OF FRESNO
CALIFORNIA

DRAWING TITLE:
ADU 03
CRAFTSMAN FOUNDATION AND FRAMING PLANS

DATE: APRIL 1, 2022
SCALE: AS NOTED
DRAWN BY:

© Aaron Neubert Architects, INC. 2021

S.100c

PLOTTED ON: 6/2/2022 1:58:49 PM
Autodesk Docs://21368 Fresno ADUs_R22/NE_21368 Fresno ADU 03_R22.rvt

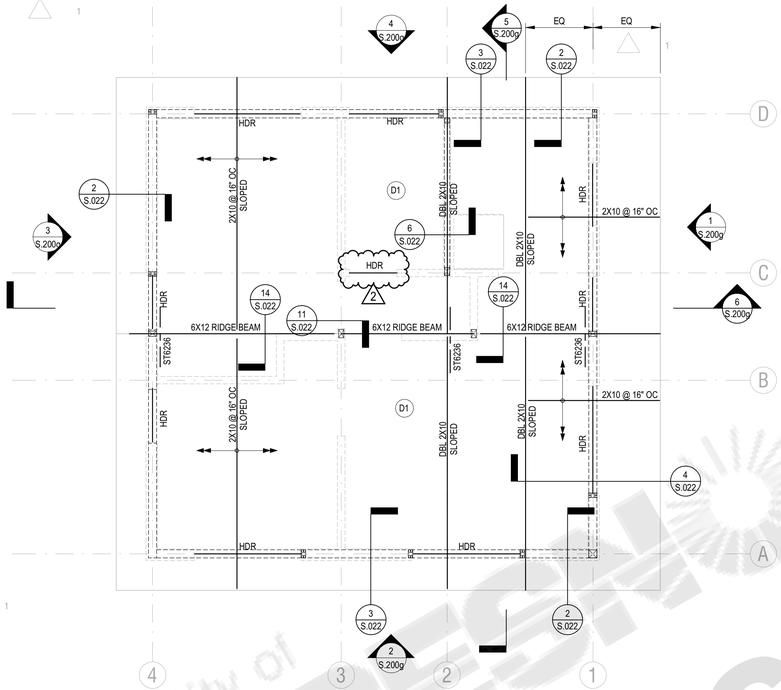

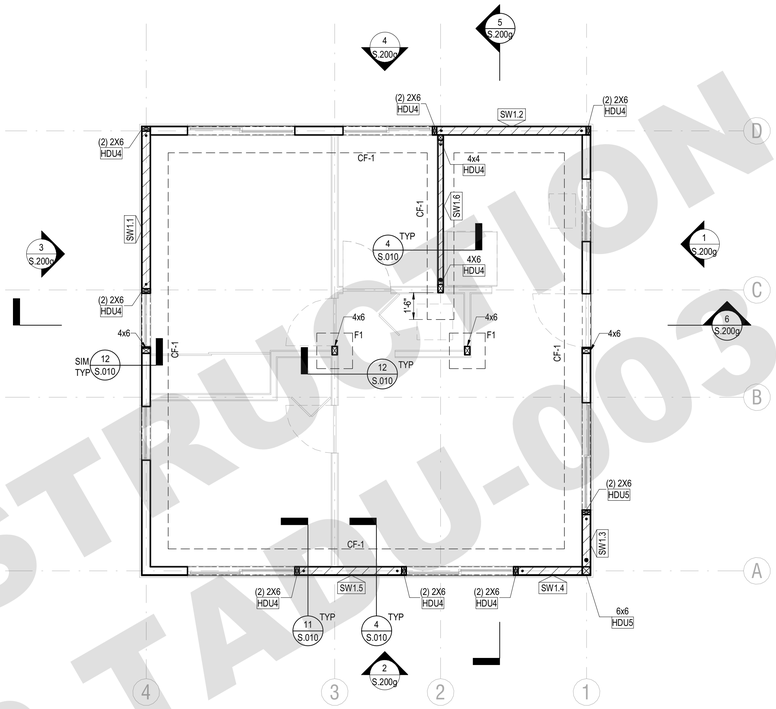

FRESNO
City of
CONSTRUCTION
HOT FOR
22-T ADU-003
PLAN 3

FRAMING PLAN NOTES

1. REFER TO S0 SERIES SHEETS FOR GENERAL NOTES AND TYPICAL DETAILS.
2. DEPRESSIONS, CURBS, AND OPENINGS SHOWN ON THIS PLAN ARE NOT COMPLETE AS TO NUMBER, SIZE, AND LOCATION. FOR COMPLETE INFORMATION, REFER TO DRAWINGS OTHER THAN STRUCTURAL.
3. GENERAL CONTRACTOR SHALL COORDINATE THE LOCATION OF EQUIPMENT SUPPORT BEAMS AND BEAMS AROUND FLOOR OPENINGS WITH ALL PROJECT REQUIREMENTS
4. WHERE DROPPED CEILINGS OCCUR, CONNECT TO ADJACENT STUD WALLS PER DETAIL 13 / S.020 AND 14 / S.020

FRAMING PLAN LEGEND

INDICATES WALL BELOW

D1 — INDICATES DIAPHRAGM TYPE, FOR ADDITIONAL INFORMATION REFER TO 7 / S.023

HDR — INDICATES DROPPED HEADER FOR SIZE AND SUPPORTS SEE DETAIL 11 / S.020 , UON ON PLAN
- WHERE HEADER INTERUPTS TOP PLATES OF STUD WALL, PROVIDE MIN CS14 STRAP FROM HEADER TO ADJACENT WALLS, DEVELOPMENT LENGTH AND FASTENING PER MANUFACTURER, UON ON PLAN
- SEE ARCHITECTURAL DRAWINGS FOR ADDITIONAL ROUGH OPENING DIMENSIONS, ALLOW FOR TRIMMERS AND JAMB STUDS ADJACENT TO HOLDOWN POST LOCATIONS

INDICATES WOOD BEAM WITH SIMPSON HANGER CONNECTION TO STUD WALL PER 7 / S.022

2 GABLE (GABLE-STUCCO) ROOF FRAMING PLAN
1/4" = 1'-0"

FOUNDATION PLAN NOTES

1. TOP OF FOOTING GRADE BEAM ELEVATION TO BE 1'-0" BELOW TOP OF SLAB OR FINISHED GRADE, UON.
2. REFER TO S0 SERIES SHEETS FOR GENERAL NOTES AND TYPICAL DETAILS.
3. ALL SETTING OUT DIMENSIONS ARE TO BE READ IN CONJUNCTION AND CONFIRMED WITH ARCHITECTURAL DRAWINGS.
4. EXCAVATIONS SHALL BE MADE AS NEAR AS POSSIBLE TO THE NEAT LINES REQUIRED BY THE SIZE AND SHAPE OF THE STRUCTURE. NO MATERIAL IS TO BE EXCAVATED UNNECESSARILY.
5. CURBS AND DEPRESSIONS ARE SHOWN FOR REFERENCE ONLY. SEE ARCH DWGS FOR LOCATIONS, HEIGHT, AND THICKNESS.
6. SEE ARCH DWGS FOR EDGE OF SLAB LOCATIONS.
7. VERIFY LOCATION OF UNDERGROUND UTILITIES BEFORE EXCAVATIONS. NOTIFY ARCHITECT PRIOR TO EXCAVATION IN THE EVENT SUCH UTILITIES ARE ENCOUNTERED.
8. FOR DRAINAGE DETAILS, SUMPS, PITS, DAMP PROOFING, TRENCHES, CURBS, EXTERIOR WALKS, UTILITIES, EQUIPMENT DETAILS, STEPS, ETC., SEE DRAWINGS OTHER THAN STRUCTURAL.
9. SLAB CONSTRUCTION AND CONTROL JOINT LOCATIONS SHALL BE APPROVED BY THE ARCHITECT PRIOR TO PLACING ANY CONCRETE.
10. PROVIDE A 6" CURB AT EXTERIOR TIMBER WALLS. SEE ARCHITECTURAL DRAWINGS FOR LOCATIONS.

FOUNDATION PLAN LEGEND

INDICATES STUD/BEARING WALL PER 11 / S.020 THICKNESS AND LOCATION PER ARCH

INDICATES STUD/NON-BEARING WALL PER 11 / S.020 THICKNESS AND LOCATION PER ARCH

INDICATES WOOD SHEAR WALL ID, AT SIDE TO BE NAILED REFER TO "SHEAR WALL SCHEDULE" FOR ADDITIONAL INFORMATION
- FOR SHEAR WALL CONSTRUCTION PER "SHEAR WALL TYPE" REFER TO 6 / S.021

INDICATES LOCATION OF POST AND HOLDOWN,
- POST SIZE PER PLAN
- HOLDOWN TYPE PER PLAN
- ADDITIONAL HOLDOWN, ANCHOR ROD, AND EMBED INFORMATION REF TYP DETAIL
- FOR ANCHOR BOLT SETTING OUT DIMENSIONS SEE 7 / S.021

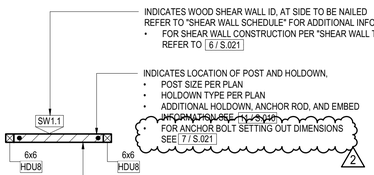

INDICATES WOOD SHEAR WALL EXTENTS, ABOVE LENGTH SHOWN IN SCHEDULE INDICATES APPROXIMATE LENGTH OF SHEAR WALL, ACTUAL LENGTH MAY DEVIATE +/- 6".

1 GABLE (GABLE-STUCCO) FOUNDATION PLAN
1/4" = 1'-0"

CONTINUOUS FOOTING SCHEDULE

TYPE MARK	WIDTH, W	DEPTH, D	TOP BARS	BOTTOM BARS	TIES
CF-1	1' - 6"	1'-6"	(2) #5	(2) #5	#4 @ 12" OC

ISOLATED FOOTING SCHEDULE

TYPE MARK	WIDTH, W	LENGTH, B	DEPTH, D	TOP BARS	BOTTOM BARS
F1	2' - 0"	2'-0"	1'-6"	-	(3) #4 EA WAY

WOOD SHEAR WALL SCHEDULE

WALL ID	SHEAR WALL TYPE	LENGTH	WIDTH
SW1.1	A	9'-6"	5 1/2"
SW1.2	A	9'-0"	5 1/2"
SW1.3	B	3'-6"	5 1/2"
SW1.4	B	4'-0"	5 1/2"
SW1.5	A	6'-0"	5 1/2"
SW1.6	A	9'-0"	3 1/2"

ANX
AARON NEUBERT ARCHITECTS

ADU PROGRAM

OWNER:
CITY OF FRESNO
PLANNING AND DEVELOPMENT DEPARTMENT
2600 FRESNO STREET, 3RD FLOOR
FRESNO, CA 93721

ARCHITECT:
AARON NEUBERT ARCHITECTS, INC.
2814 ROWENA AVENUE, SUITE ONE
LOS ANGELES, CALIFORNIA 90039
P. 323.953.4700 F. 323.953.4900
AARON NEUBERT CA# C-29005

STRUCTURAL ENGINEER:
NOUS ENGINEERING, INC.
600 WILSHIRE BOULEVARD, SUITE 760
LOS ANGELES, CALIFORNIA 90017
P. 213.627.6687

MEP ENGINEER:
INNODEZ DESIGN AND ENGINEERING
726 FOXBROUGH PLACE
PLEASANTON, CALIFORNIA 94566
P. 424.414.0997

REVISION: DATE: COMMENT:
2 REVISION #2 06.03.22 PLAN CHECK CORRECTIONS
1 REVISION #1 04.01.22 PLAN CHECK CORRECTIONS

SEAL:
REGISTERED PROFESSIONAL ENGINEER ELIZABETH MARION C80463 EXP 03/31/2023 CIVIL STATE OF CALIFORNIA

Project No. 2104
ADU PROGRAM
CITY OF FRESNO
CALIFORNIA

DRAWING TITLE:
ADU 03
GABLE (GABLE-STUCCO)
FOUNDATION AND FRAMING
PLANS

DATE: APRIL 1, 2022
SCALE: AS NOTED
DRAWN BY:

© Aaron Neubert Architects, INC. 2021

S.100g

PLOTTED ON: 6/2/2022 1:55:51 PM
Autodesk Docs://21388 Fresno ADUs_R22/NE_21388 Fresno ADU 03_R22.rvt

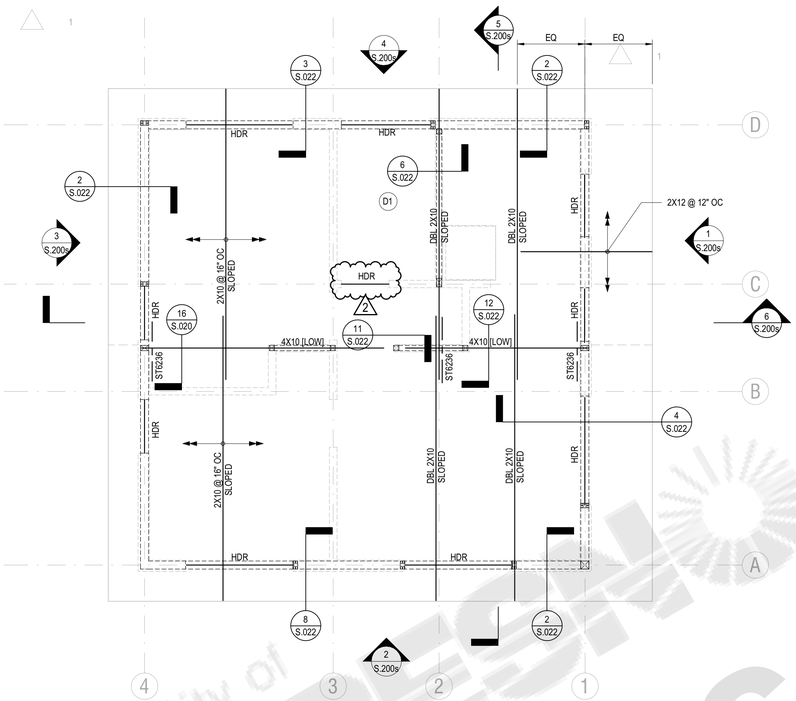

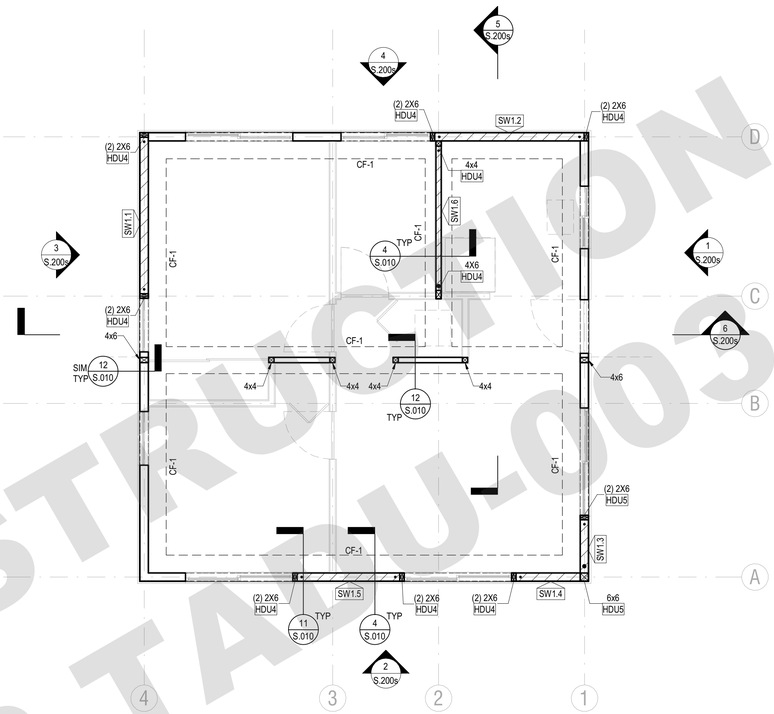

CONSTRUCTION
NOT FOR
PLAN 3
22-T ADU-003
FRESNO
City of

FRAMING PLAN NOTES

1. REFER TO S0 SERIES SHEETS FOR GENERAL NOTES AND TYPICAL DETAILS.
2. DEPRESSIONS, CURBS, AND OPENINGS SHOWN ON THIS PLAN ARE NOT COMPLETE AS TO NUMBER, SIZE, AND LOCATION. FOR COMPLETE INFORMATION, REFER TO DRAWINGS OTHER THAN STRUCTURAL.
3. GENERAL CONTRACTOR SHALL COORDINATE THE LOCATION OF EQUIPMENT SUPPORT BEAMS AND BEAMS AROUND FLOOR OPENINGS WITH ALL PROJECT REQUIREMENTS
4. WHERE DROPPED CEILINGS OCCUR, CONNECT TO ADJACENT STUD WALLS PER DETAIL 13 / S.020 AND 14 / S.020

FRAMING PLAN LEGEND

INDICATES WALL BELOW

D1 — INDICATES DIAPHRAGM TYPE, FOR ADDITIONAL INFORMATION REFER TO 7 / S.023

HDR — INDICATES DROPPED HEADER FOR SIZE AND SUPPORTS SEE DETAIL 11 / S.020 , UON ON PLAN
- WHERE HEADER INTERUPTS TOP PLATES OF STUD WALL, PROVIDE MIN CS14 STRAP FROM HEADER TO ADJACENT WALLS, DEVELOPMENT LENGTH AND FASTENING PER MANUFACTURER, UON ON PLAN
- SEE ARCHITECTURAL DRAWINGS FOR ADDITIONAL ROUGH OPENING DIMENSIONS, ALLOW FOR TRIMMERS AND JAMB STUDS ADJACENT TO HOLDOWN POST LOCATIONS

INDICATES WOOD BEAM WITH SIMPSON HANGER CONNECTION TO STUD WALL PER 7 / S.022

CONTEMPORARY ROOF FRAMING PLAN

2 — 1/4" = 1'-0"

FOUNDATION PLAN NOTES

1. TOP OF FOOTING GRADE BEAM ELEVATION TO BE 1'-0" BELOW TOP OF SLAB OR FINISHED GRADE, UON.
2. REFER TO S0 SERIES SHEETS FOR GENERAL NOTES AND TYPICAL DETAILS.
3. ALL SETTING OUT DIMENSIONS ARE TO BE READ IN CONJUNCTION AND CONFIRMED WITH ARCHITECTURAL DRAWINGS.
4. EXCAVATIONS SHALL BE MADE AS NEAR AS POSSIBLE TO THE NEAT LINES REQUIRED BY THE SIZE AND SHAPE OF THE STRUCTURE. NO MATERIAL IS TO BE EXCAVATED UNNECESSARILY.
5. CURBS AND DEPRESSIONS ARE SHOWN FOR REFERENCE ONLY. SEE ARCH DWGS FOR LOCATIONS, HEIGHT, AND THICKNESS.
6. SEE ARCH DWGS FOR EDGE OF SLAB LOCATIONS.
7. VERIFY LOCATION OF UNDERGROUND UTILITIES BEFORE EXCAVATIONS. NOTIFY ARCHITECT PRIOR TO EXCAVATION IN THE EVENT SUCH UTILITIES ARE ENCOUNTERED.
8. FOR DRAINAGE DETAILS, SUMPS, PITS, DAMP PROOFING, TRENCHES, CURBS, EXTERIOR WALKS, UTILITIES, EQUIPMENT DETAILS, STEPS, ETC., SEE DRAWINGS OTHER THAN STRUCTURAL.
9. SLAB CONSTRUCTION AND CONTROL JOINT LOCATIONS SHALL BE APPROVED BY THE ARCHITECT PRIOR TO PLACING ANY CONCRETE.
10. PROVIDE A 6" CURB AT EXTERIOR TIMBER WALLS. SEE ARCHITECTURAL DRAWINGS FOR LOCATIONS.

FOUNDATION PLAN LEGEND

INDICATES STUD/BEARING WALL PER 11 / S.020 THICKNESS AND LOCATION PER ARCH

INDICATES STUD/NON-BEARING WALL PER 11 / S.020 THICKNESS AND LOCATION PER ARCH

INDICATES WOOD SHEAR WALL ID, AT SIDE TO BE NAILED REFER TO "SHEAR WALL SCHEDULE" FOR ADDITIONAL INFORMATION
- FOR SHEAR WALL CONSTRUCTION PER "SHEAR WALL TYPE" REFER TO 6 / S.021

INDICATES LOCATION OF POST AND HOLDOWN,
- POST SIZE PER PLAN
- HOLDOWN TYPE PER PLAN
- ADDITIONAL HOLDOWN, ANCHOR ROD, AND EMBED INFORMATION SEE 7 / S.021
- FOR ANCHOR BOLT SETTING OUT DIMENSIONS SEE 7 / S.021

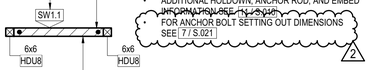

INDICATES WOOD SHEAR WALL EXTENTS, ABOVE LENGTH SHOWN IN SCHEDULE INDICATES APPROXIMATE LENGTH OF SHEAR WALL, ACTUAL LENGTH MAY DEVIATE +/- 6".

CONTEMPORARY FOUNDATION PLAN

1 — 1/4" = 1'-0"

CONTINUOUS FOOTING SCHEDULE

TYPE MARK	WIDTH, W	DEPTH, D	TOP BARS	BOTTOM BARS	TIES
CF-1	1'- 6"	1'-6"	(2) #5	(2) #5	#4 @ 12" OC

WOOD SHEAR WALL SCHEDULE

WALL ID	SHEAR WALL TYPE	LENGTH	WIDTH
SW1.1	A	9'-0"	5 1/2"
SW1.2	A	9'-0"	5 1/2"
SW1.3	B	3'-6"	5 1/2"
SW1.4	B	4'-0"	5 1/2"
SW1.5	A	6'-0"	5 1/2"
SW1.6	A	9'-0"	3 1/2"

ANX
AARON NEUBERT ARCHITECTS

ADU PROGRAM

OWNER:
CITY OF FRESNO
PLANNING AND DEVELOPMENT DEPARTMENT
2600 FRESNO STREET, 3RD FLOOR
FRESNO, CA 93721

ARCHITECT:
AARON NEUBERT ARCHITECTS, INC.
2814 ROWENA AVENUE, SUITE ONE
LOS ANGELES, CALIFORNIA 90039
P. 323.953.4700 F. 323.953.4900

AARON NEUBERT CA# C-29005

STRUCTURAL ENGINEER:
NOUS ENGINEERING, INC.
600 WILSHIRE BOULEVARD, SUITE 760
LOS ANGELES, CALIFORNIA 90017
P. 213.627.6687

MEP ENGINEER:
INNODEZ DESIGN AND ENGINEERING
726 FOXBROUGH PLACE
PLEASANTON, CALIFORNIA 94566
P. 424.414.0997

REVISION: DATE: COMMENT:

2 REVISION #2 06.03.22 PLAN CHECK CORRECTIONS

1 REVISION #1 04.01.22 PLAN CHECK CORRECTIONS

SEAL:

REGISTERED PROFESSIONAL ENGINEER ELIZABETH MARION C80463 EXP 03/31/2023 CIVIL STATE OF CALIFORNIA

Project No. 2104

ADU PROGRAM

CITY OF FRESNO
CALIFORNIA

DRAWING TITLE:

ADU 03
CONTEMPORARY FOUNDATION AND FRAMING PLAN

DATE: APRIL 1, 2022

SCALE: AS NOTED

DRAWN BY:

© Aaron Neubert Architects, INC. 2021

S.100s

PLOTTED ON: 6/2/2022 1:55:17 PM
Autodesk Docs://21368 Fresno ADUs_R22/NE_21368 Fresno ADU 03_R22.rvt

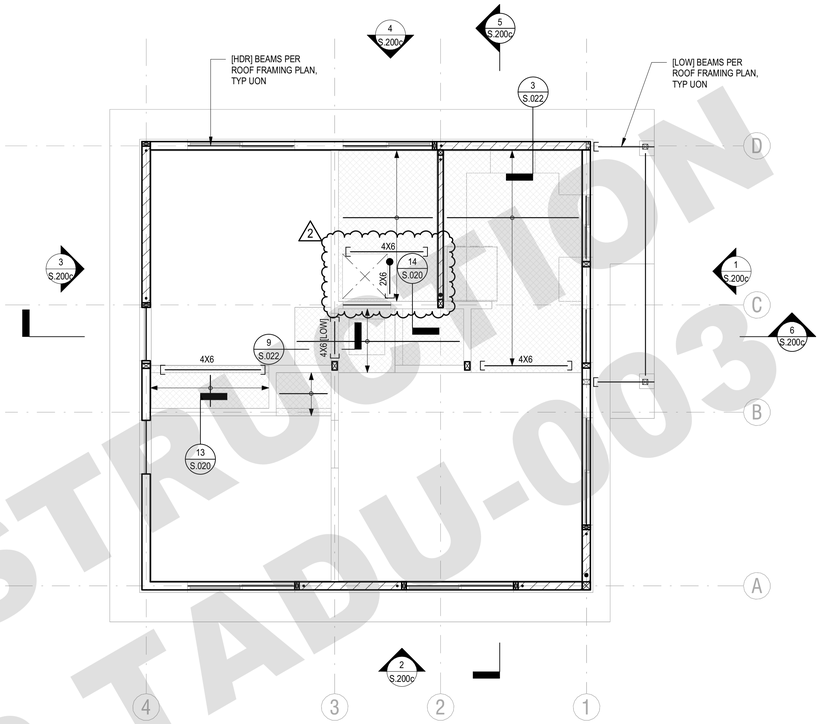

FRAMING PLAN NOTES

1. REFER TO S0 SERIES SHEETS FOR GENERAL NOTES AND TYPICAL DETAILS.
2. DEPRESSIONS, CURBS, AND OPENINGS SHOWN ON THIS PLAN ARE NOT COMPLETE AS TO NUMBER, SIZE, AND LOCATION. FOR COMPLETE INFORMATION, REFER TO DRAWINGS OTHER THAN STRUCTURAL.
3. GENERAL CONTRACTOR SHALL COORDINATE THE LOCATION OF EQUIPMENT SUPPORT BEAMS AND BEAMS AROUND FLOOR OPENINGS WITH ALL PROJECT REQUIREMENTS.

FRAMING PLAN LEGEND

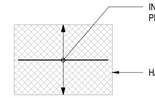

INDICATES TYPICAL CEILING JOISTS, 2X6 @ 16" OC UON
PROVIDE SIMPSON HU28 HANGERS EA END UON IN DETAILS

HATCHED AREAS INDICATE DROPPED CEILING EXTENTS

INDICATES WOOD BEAM WITH SIMPSON HANGER CONNECTION TO STUD WALL PER 15 / S.020

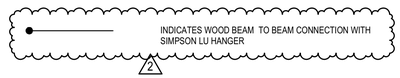

INDICATES WOOD BEAM TO BEAM CONNECTION WITH SIMPSON LU HANGER

2

1 CRAFTSMAN CEILING FRAMING PLAN

1/4" = 1'-0"

CITY OF FRESNO
NOT FOR CONSTRUCTION
PLAN 3
22-T ADU-003

ANX
AARON NEUBERT ARCHITECTS

ADU PROGRAM

OWNER:

CITY OF FRESNO
PLANNING AND DEVELOPMENT DEPARTMENT
2600 FRESNO STREET, 3RD FLOOR
FRESNO, CA 93721

ARCHITECT:

AARON NEUBERT ARCHITECTS, INC.
2814 ROWENA AVENUE, SUITE ONE
LOS ANGELES, CALIFORNIA 90039
P. 323.953.4700 F. 323.953.4900

AARON NEUBERT CA# C-29005

STRUCTURAL ENGINEER:

NOUS ENGINEERING, INC.
600 WILSHIRE BOULEVARD, SUITE 760
LOS ANGELES, CALIFORNIA 90017
P. 213.627.6687

MEP ENGINEER:

INNODEZ DESIGN AND ENGINEERING
726 FOXBROUGH PLACE
PLEASANTON, CALIFORNIA 94566
P. 424.414.0997

REVISION:	DATE:	COMMENT:
2 REVISION #2	06.03.22	PLAN CHECK CORRECTIONS
1 REVISION #1	04.01.22	PLAN CHECK CORRECTIONS

SEAL:

REGISTERED PROFESSIONAL ENGINEER
ELIZABETH MARION
C80463
EXP 03/31/2023
CIVIL
STATE OF CALIFORNIA

Project No. 2104

ADU PROGRAM

CITY OF FRESNO
CALIFORNIA

DRAWING TITLE:

ADU 03
CRAFTSMAN CEILING FRAMING PLAN

DATE: APRIL 1, 2022

SCALE: AS NOTED

DRAWN BY:

© Aaron Neubert Architects, INC. 2021

S.110c

PLOTTED ON: 6/2/2022 1:58:09 PM
Autodesk Docs://21388 Fresno ADUs_R22/NE_21388 Fresno ADU 03_R22.rvt

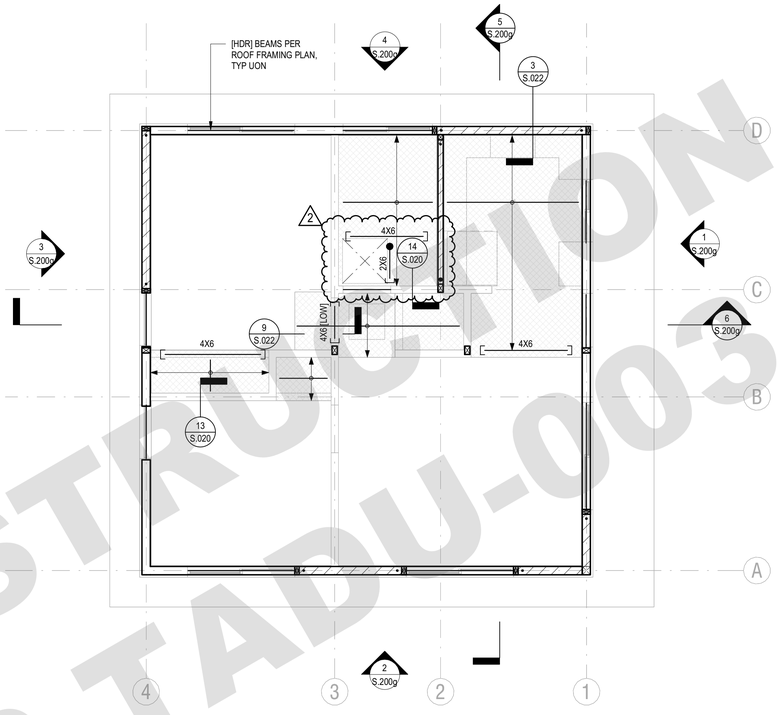

FRAMING PLAN NOTES

1. REFER TO S0 SERIES SHEETS FOR GENERAL NOTES AND TYPICAL DETAILS.
2. DEPRESSIONS, CURBS, AND OPENINGS SHOWN ON THIS PLAN ARE NOT COMPLETE AS TO NUMBER, SIZE, AND LOCATION. FOR COMPLETE INFORMATION, REFER TO DRAWINGS OTHER THAN STRUCTURAL.
3. GENERAL CONTRACTOR SHALL COORDINATE THE LOCATION OF EQUIPMENT SUPPORT BEAMS AND BEAMS AROUND FLOOR OPENINGS WITH ALL PROJECT REQUIREMENTS.

FRAMING PLAN LEGEND

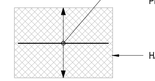

INDICATES TYPICAL CEILING JOISTS, 2X6 @ 16" OC UON
PROVIDE SIMPSON HU28 HANGERS EA END UON IN DETAILS

HATCHED AREAS INDICATE DROPPED CEILING EXTENTS

INDICATES WOOD BEAM WITH SIMPSON HANGER CONNECTION TO STUD WALL PER 15 / S.020

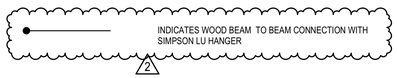

INDICATES WOOD BEAM TO BEAM CONNECTION WITH SIMPSON LU HANGER

1 GABLE (GABLE-STUCCO) CEILING FRAMING PLAN

1/4" = 1'-0"

CONSTRUCTION
NOT FOR
PLAN 3
22-T ADU-003
City of FRESNO

ANX
AARON NEUBERT ARCHITECTS

ADU PROGRAM

OWNER:

CITY OF FRESNO
PLANNING AND DEVELOPMENT DEPARTMENT
2600 FRESNO STREET, 3RD FLOOR
FRESNO, CA 93721

ARCHITECT:

AARON NEUBERT ARCHITECTS, INC.
2814 ROWENA AVENUE, SUITE ONE
LOS ANGELES, CALIFORNIA 90039
P. 323.953.4700 F. 323.953.4900

AARON NEUBERT CA# C-29005

STRUCTURAL ENGINEER:

NOUS ENGINEERING, INC.
600 WILSHIRE BOULEVARD, SUITE 760
LOS ANGELES, CALIFORNIA 90017
P. 213.627.6687

MEP ENGINEER:

INNODEZ DESIGN AND ENGINEERING
726 FOXBROUGH PLACE
PLEASANTON, CALIFORNIA 94566
P. 424.414.0997

REVISION:	DATE:	COMMENT:
2 REVISION #2	06.03.22	PLAN CHECK CORRECTIONS
1 REVISION #1	04.01.22	PLAN CHECK CORRECTIONS

SEAL:

REGISTERED PROFESSIONAL ENGINEER
ELIZABETH MARION
C80463
EXP 03/31/2023
CIVIL
STATE OF CALIFORNIA

Project No. 2104

ADU PROGRAM

CITY OF FRESNO
CALIFORNIA

DRAWING TITLE:

ADU 03
GABLE (GABLE-STUCCO) CEILING FRAMING PLAN

DATE: APRIL 1, 2022

SCALE: AS NOTED

DRAWN BY:

© Aaron Neubert Architects, INC. 2021

S.110g

PLOTTED ON: 6/2/2022 1:50:07 PM
Autodesk Docs://21388 Fresno ADUs_R22/NE_21388 Fresno ADU 03_R22.rvt

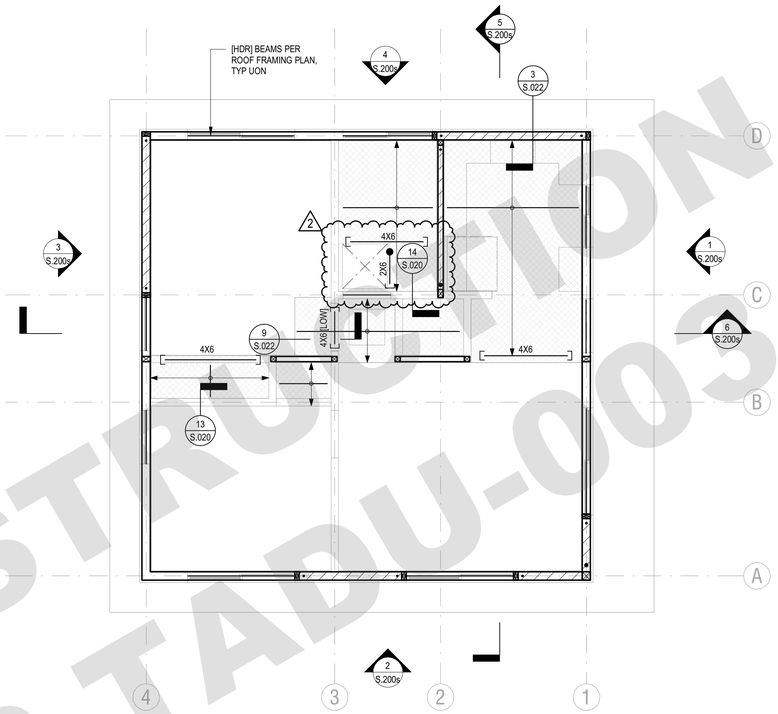

FRAMING PLAN NOTES

1. REFER TO S0 SERIES SHEETS FOR GENERAL NOTES AND TYPICAL DETAILS.
2. DEPRESSIONS, CURBS, AND OPENINGS SHOWN ON THIS PLAN ARE NOT COMPLETE AS TO NUMBER, SIZE, AND LOCATION. FOR COMPLETE INFORMATION, REFER TO DRAWINGS OTHER THAN STRUCTURAL.
3. GENERAL CONTRACTOR SHALL COORDINATE THE LOCATION OF EQUIPMENT SUPPORT BEAMS AND BEAMS AROUND FLOOR OPENINGS WITH ALL PROJECT REQUIREMENTS.

FRAMING PLAN LEGEND

INDICATES TYPICAL CEILING JOISTS, 2X6 @ 16" OC UON
PROVIDE SIMPSON HU28 HANGERS EA END UON IN DETAILS

HATCHED AREAS INDICATE DROPPED CEILING EXTENTS

INDICATES WOOD BEAM WITH SIMPSON HANGER CONNECTION TO STUD WALL PER 15 / S.020

INDICATES WOOD BEAM TO BEAM CONNECTION WITH SIMPSON LU HANGER
2

CONTEMPORARY CEILING FRAMING PLAN

1 1/4" = 1'-0"

City of FRESNO
NOT FOR CONSTRUCTION
PLAN 3
22-T ADU-003

ANX
AARON NEUBERT ARCHITECTS

ADU PROGRAM

OWNER:
CITY OF FRESNO
PLANNING AND DEVELOPMENT DEPARTMENT
2600 FRESNO STREET, 3RD FLOOR
FRESNO, CA 93721

ARCHITECT:
AARON NEUBERT ARCHITECTS, INC.
2814 ROWENA AVENUE, SUITE ONE
LOS ANGELES, CALIFORNIA 90039
P. 323.953.4700 F. 323.953.4900

AARON NEUBERT CA# C-29005

STRUCTURAL ENGINEER:
NOUS ENGINEERING, INC.
600 WILSHIRE BOULEVARD, SUITE 760
LOS ANGELES, CALIFORNIA 90017
P. 213.627.6687

MEP ENGINEER:
INNODEZ DESIGN AND ENGINEERING
726 FOXBROUGH PLACE
PLEASANTON, CALIFORNIA 94566
P. 424.414.0997

REVISION: DATE: COMMENT:

2 REVISION #2 06.03.22 PLAN CHECK CORRECTIONS

1 REVISION #1 04.01.22 PLAN CHECK CORRECTIONS

SEAL:

REGISTERED PROFESSIONAL ENGINEER ELIZABETH MARLON C80463 EXP 03/31/2023 CIVIL STATE OF CALIFORNIA

Project No. 2104

ADU PROGRAM

CITY OF FRESNO
CALIFORNIA

DRAWING TITLE:

ADU 03
CONTEMPORARY CEILING FRAMING PLAN

DATE: APRIL 1, 2022

SCALE: AS NOTED

DRAWN BY:

© Aaron Neubert Architects, INC. 2021

S.110s

PLOTTED ON: 6/2/2022 1:55:05 PM
Autodesk Docs://21388 Fresno ADUs_R22/NE_21388 Fresno ADU 03_R22.rvt

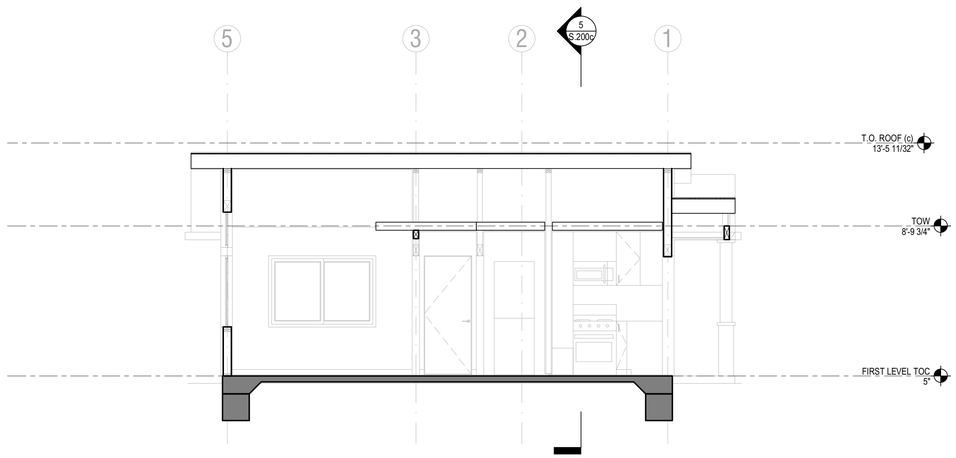

6 6(c) E-W SECTION
1/4" = 1'-0"

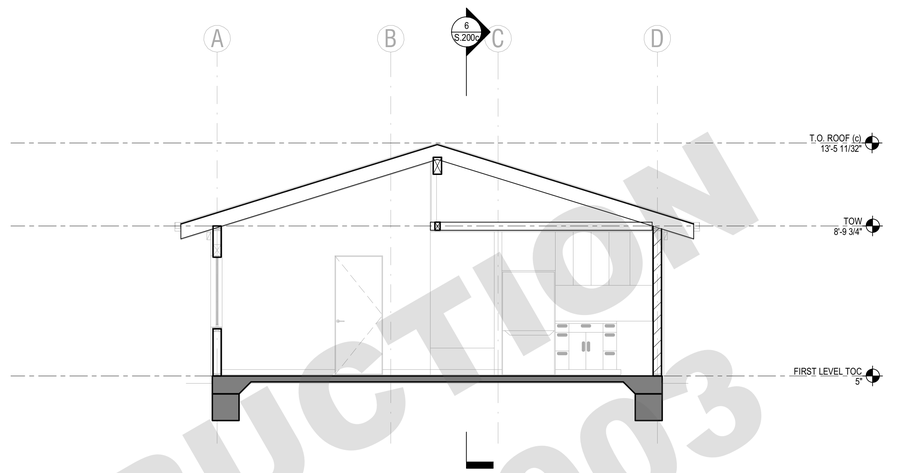

5 5(c) N-S SECTION
1/4" = 1'-0"

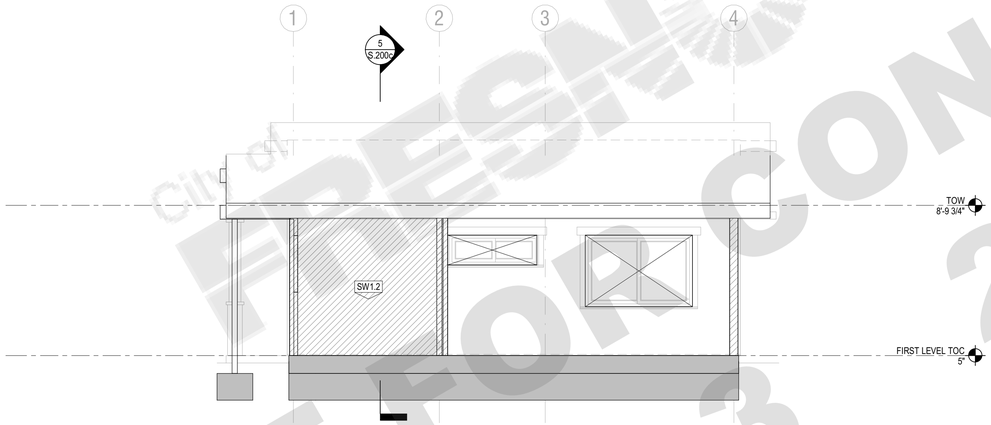

4 4(c) NORTH
1/4" = 1'-0"

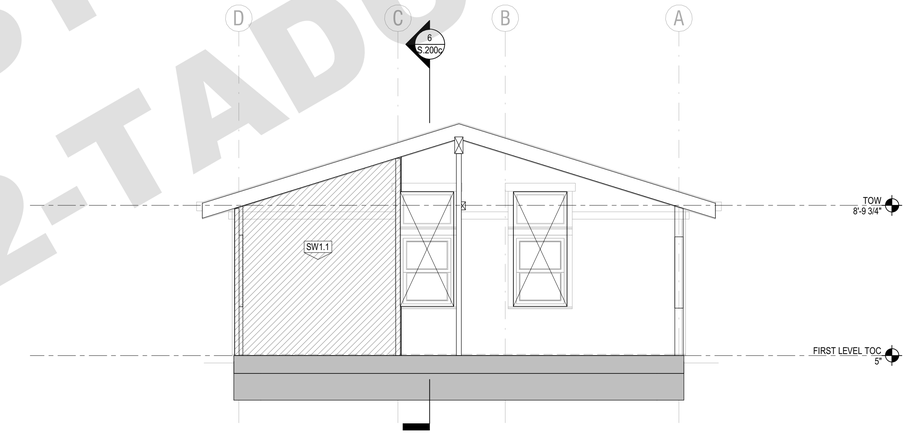

3 3(c) WEST
1/4" = 1'-0"

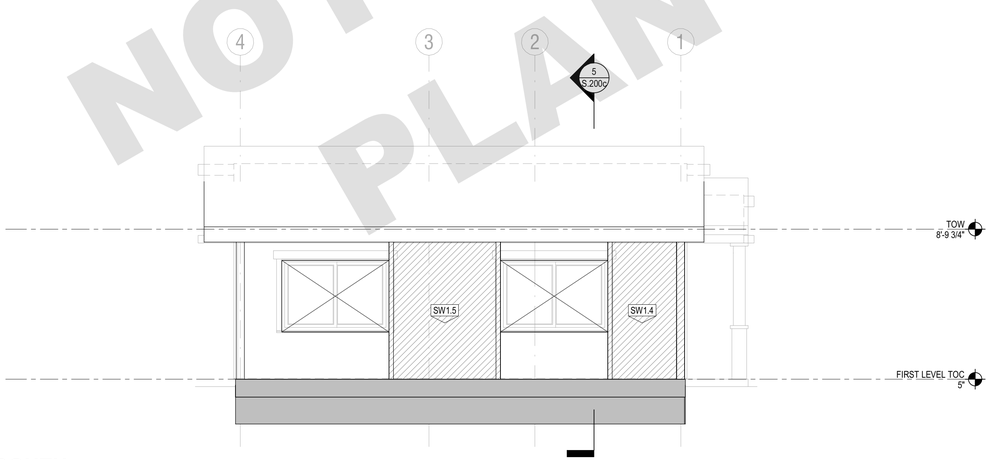

2 2(c) SOUTH
1/4" = 1'-0"

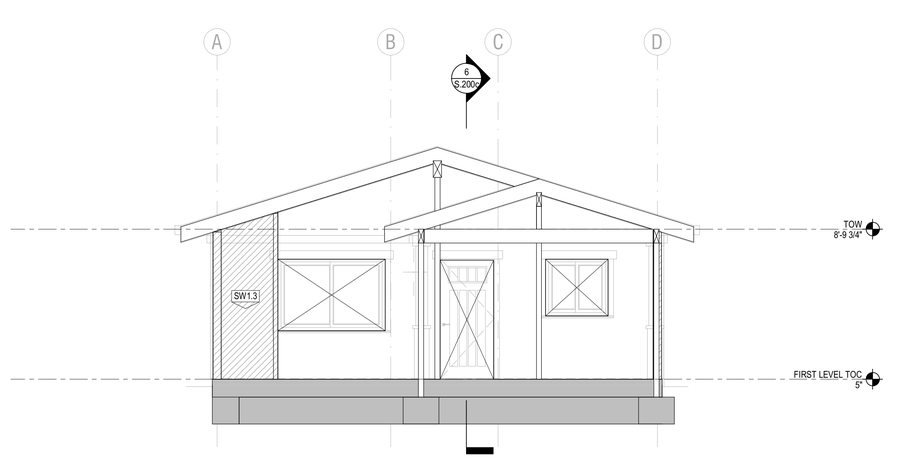

1 1(c) EAST
1/4" = 1'-0"

CONSTRUCTION
NOT FOR
PLAN 3
22-TA
DU-003
FRESNO
City of

ANX
AARON NEUBERT ARCHITECTS

ADU PROGRAM

OWNER:
CITY OF FRESNO
PLANNING AND DEVELOPMENT DEPARTMENT
2600 FRESNO STREET, 3RD FLOOR
FRESNO, CA 93721

ARCHITECT:
AARON NEUBERT ARCHITECTS, INC.
2814 ROWENA AVENUE, SUITE ONE
LOS ANGELES, CALIFORNIA 90039
P. 323.953.4700 F. 323.953.4900

AARON NEUBERT CA# C-29005

STRUCTURAL ENGINEER:
NOUS ENGINEERING, INC.
600 WILSHIRE BOULEVARD, SUITE 760
LOS ANGELES, CALIFORNIA 90017
P. 213.627.6687

MEP ENGINEER:
INNODEZ DESIGN AND ENGINEERING
726 FOXBROUGH PLACE
PLEASANTON, CALIFORNIA 94566
P. 424.414.0997

REVISION:	DATE:	COMMENT:
2	REVISION #2 06.03.22	PLAN CHECK CORRECTIONS
1	REVISION #1 04.01.22	PLAN CHECK CORRECTIONS

SEAL:

REGISTERED PROFESSIONAL ENGINEER
ELIZABETH MAHLOW
C80463
EXP 03/31/2023
CIVIL
STATE OF CALIFORNIA

Project No. 2104

ADU PROGRAM
CITY OF FRESNO
CALIFORNIA

DRAWING TITLE:

ADU 03
CRAFTSMAN ELEVATIONS
SECTIONS

DATE: APRIL 1, 2022
SCALE: AS NOTED
DRAWN BY:

S.200c

© Aaron Neubert Architects, INC. 2021

PLOTTED ON: 6/2/2022 1:59:08 PM
Autodesk Docs://21088 Fresno ADUs_R22/NE_21088 Fresno ADU 03_R22_rvt

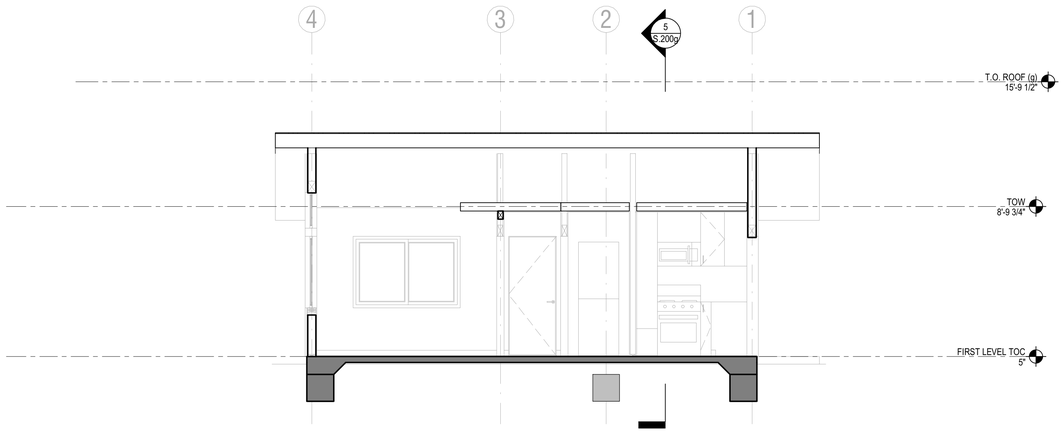

6 **6(g) E-W SECTION**
1/4" = 1'-0"

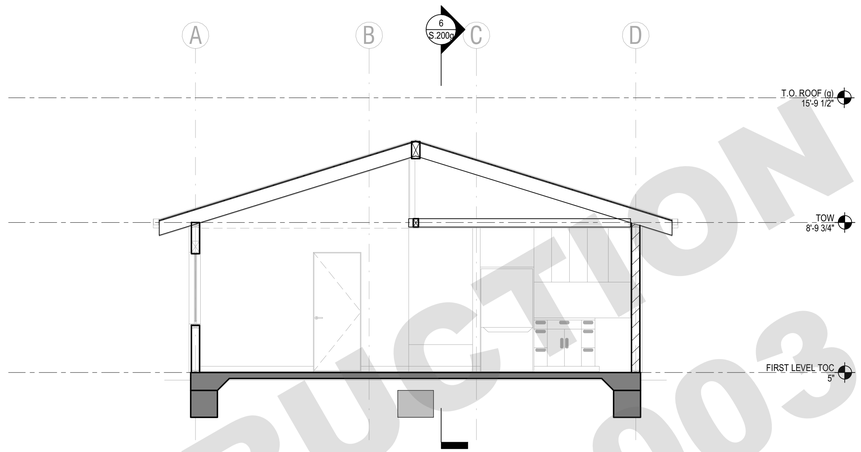

5 **5(g) N-S SECTION**
1/4" = 1'-0"

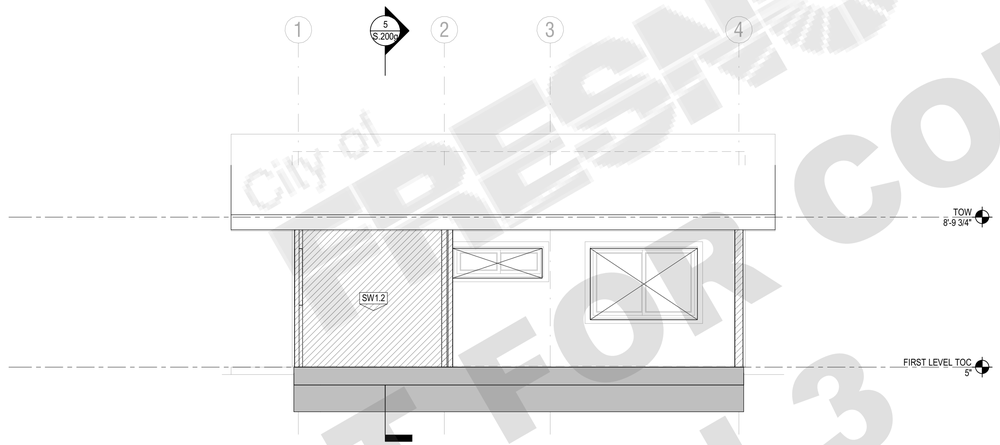

4 **4(g) NORTH**
1/4" = 1'-0"

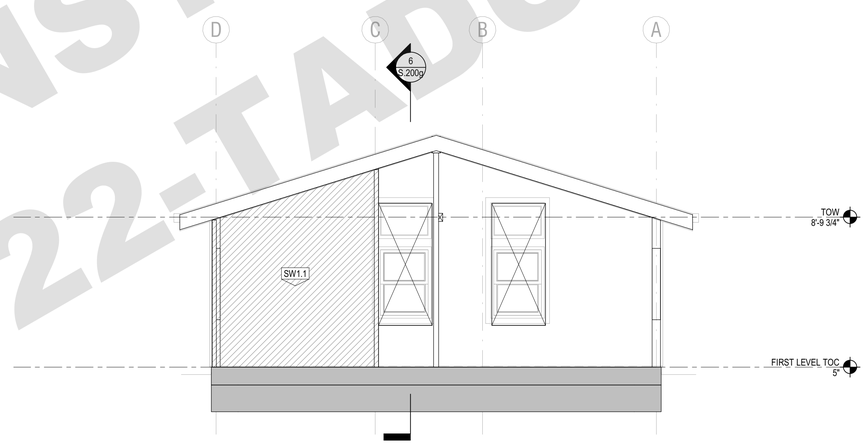

3 **3(g) WEST**
1/4" = 1'-0"

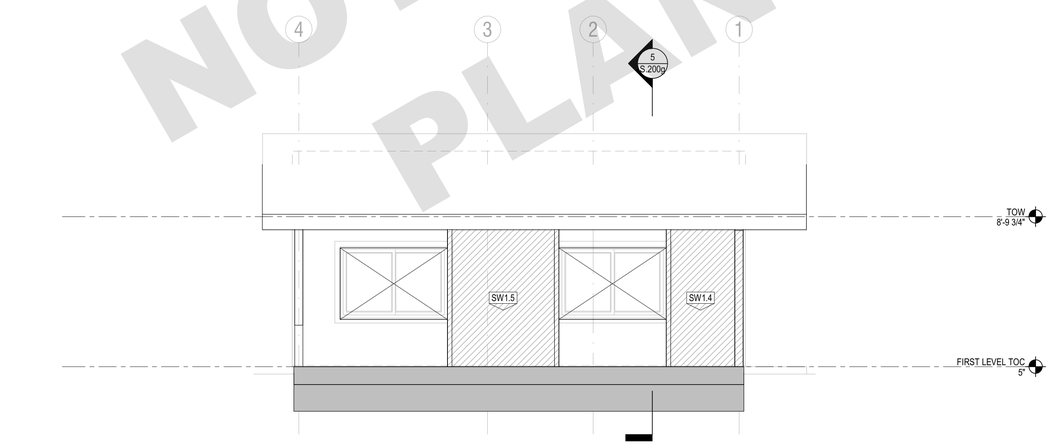

2 **2(g) SOUTH**
1/4" = 1'-0"

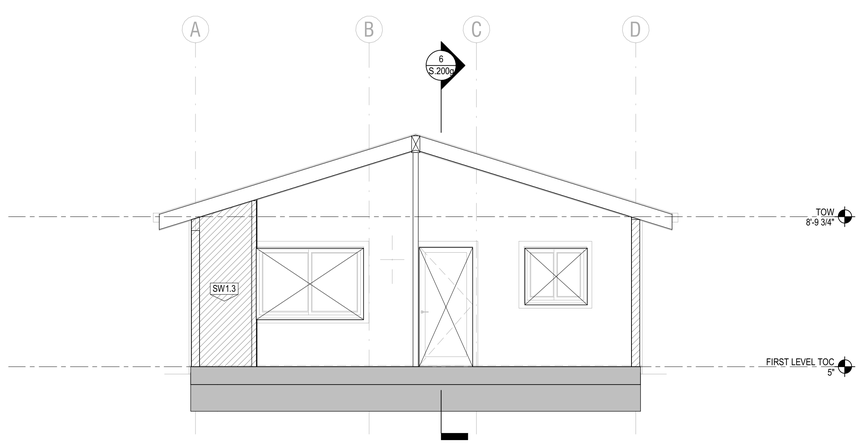

1 **1(g) EAST**
1/4" = 1'-0"

City of FRESNO
NOT FOR CONSTRUCTION
PLAN 3 22-TADU-003

PLOTTED ON: 6/2/2022 1:59:12 PM
Autodesk Docs://21388 Fresno ADUs_R22/NE_21388 Fresno ADU 03_R22.rvt

ANX
AARON NEUBERT ARCHITECTS

ADU PROGRAM

OWNER:
CITY OF FRESNO
PLANNING AND DEVELOPMENT DEPARTMENT
2600 FRESNO STREET, 3RD FLOOR
FRESNO, CA 93721

ARCHITECT:
AARON NEUBERT ARCHITECTS, INC.
2814 ROWENA AVENUE, SUITE ONE
LOS ANGELES, CALIFORNIA 90039
P: 323.953.4700 F: 323.953.4900
AARON NEUBERT CA# C-29005

STRUCTURAL ENGINEER:
NOUS ENGINEERING, INC.
600 WILSHIRE BOULEVARD, SUITE 760
LOS ANGELES, CALIFORNIA 90017
P: 213.627.6687

MEP ENGINEER:
INNODEZ DESIGN AND ENGINEERING
726 FOXBROUGH PLACE
PLEASANTON, CALIFORNIA 94566
P: 424.414.0997

REVISION:	DATE:	COMMENT:
2	REVISION #2 06.03.22	PLAN CHECK CORRECTIONS
1	REVISION #1 04.01.22	PLAN CHECK CORRECTIONS

SEAL:

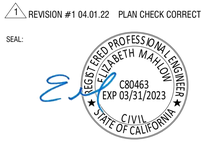

Project No. 2104
ADU PROGRAM
CITY OF FRESNO
CALIFORNIA

DRAWING TITLE:
ADU 03
GABLE (GABLE-STUCCO)
ELEVATIONS SECTIONS

DATE: APRIL 1, 2022
SCALE: AS NOTED
DRAWN BY:

© Aaron Neubert Architects, INC. 2021

S.200g

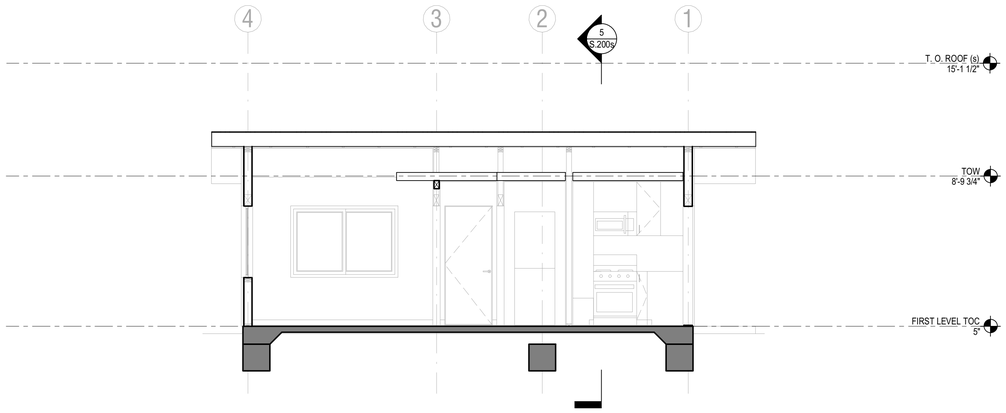

6 6(s) E-W SECTION
1/4" = 1'-0"

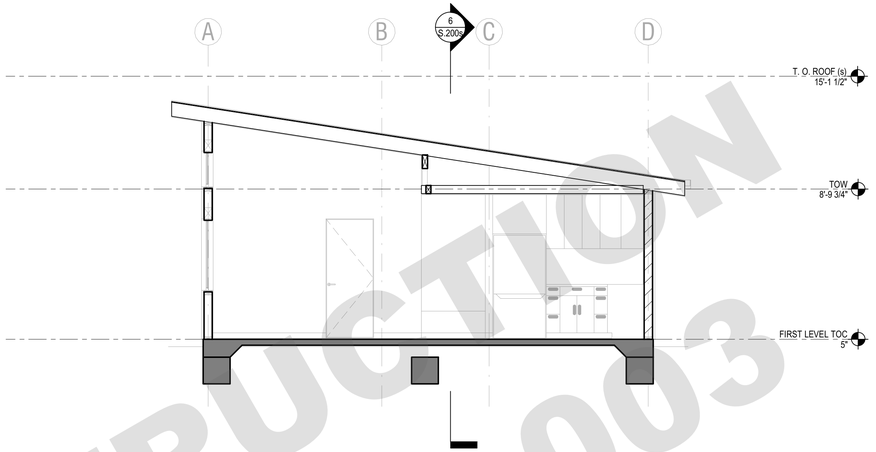

5 5(s) N-S SECTION
1/4" = 1'-0"

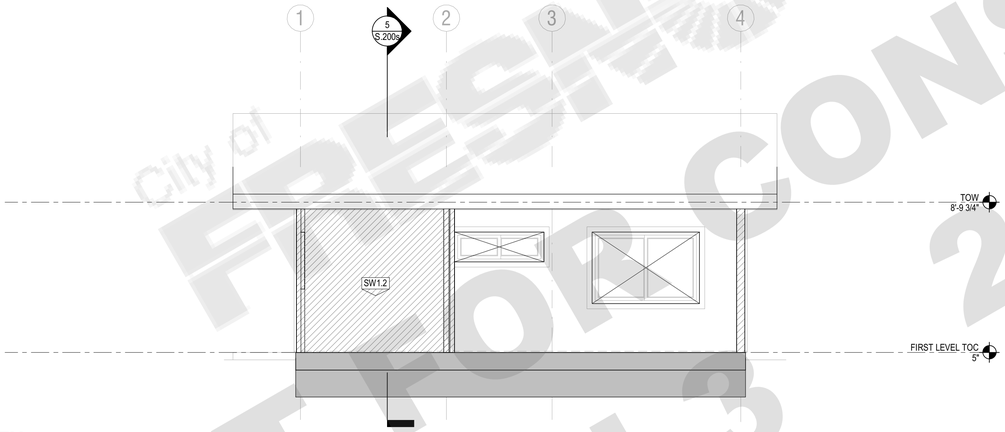

4 4(s) NORTH
1/4" = 1'-0"

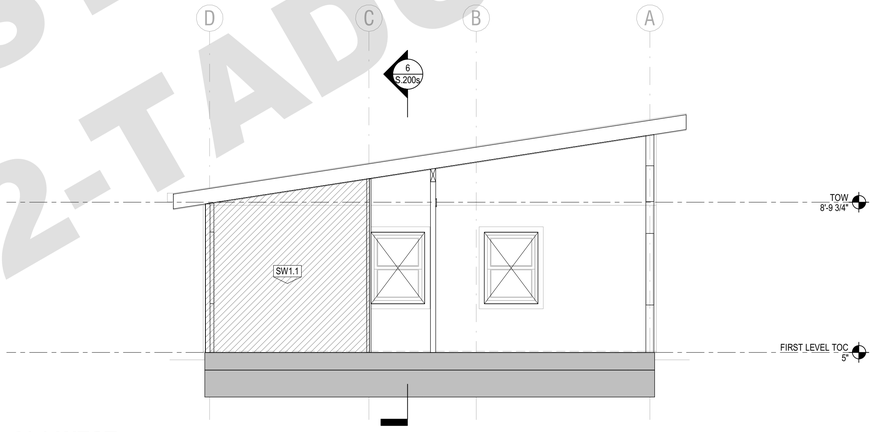

3 3(s) WEST
1/4" = 1'-0"

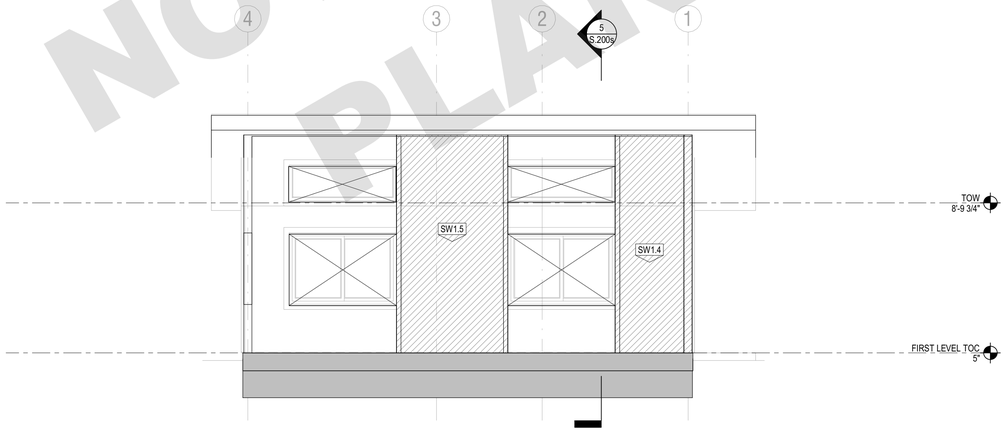

2 2(s) SOUTH
1/4" = 1'-0"

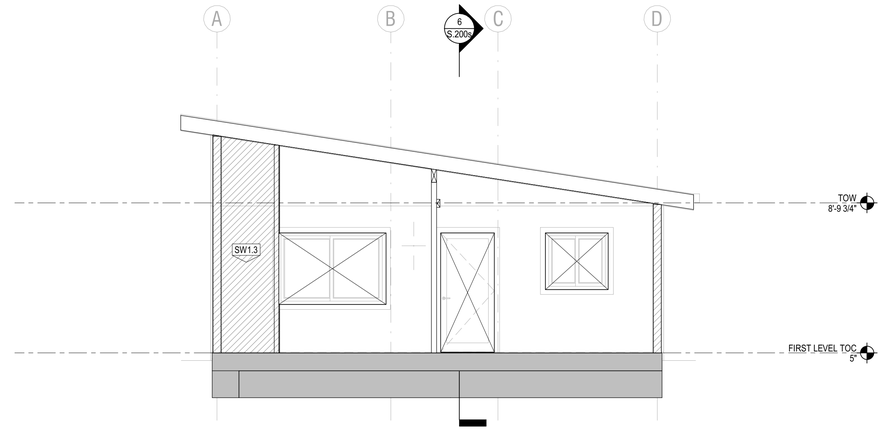

1 1(s) EAST
1/4" = 1'-0"

FRESNO
City of
NOT FOR CONSTRUCTION
PLAN 3
22-TA ADU-003

ANX
AARON NEUBERT ARCHITECTS

ADU PROGRAM

OWNER:
CITY OF FRESNO
PLANNING AND DEVELOPMENT DEPARTMENT
2600 FRESNO STREET, 3RD FLOOR
FRESNO, CA 93721

ARCHITECT:
AARON NEUBERT ARCHITECTS, INC.
2814 ROWENA AVENUE, SUITE ONE
LOS ANGELES, CALIFORNIA 90039
P. 323.953.4700 F. 323.953.4900

AARON NEUBERT CA# C-29005

STRUCTURAL ENGINEER:
NOUS ENGINEERING, INC.
600 WILSHIRE BOULEVARD, SUITE 760
LOS ANGELES, CALIFORNIA 90017
P. 213.627.6687

MEP ENGINEER:
INNODEZ DESIGN AND ENGINEERING
726 FOXBROUGH PLACE
PLEASANTON, CALIFORNIA 94566
P. 424.414.0997

REVISION:	DATE:	COMMENT:
2	REVISION #2 06.03.22	PLAN CHECK CORRECTIONS
1	REVISION #1 04.01.22	PLAN CHECK CORRECTIONS

SEAL:

REGISTERED PROFESSIONAL ENGINEER
ELISABETH MARLON
C80463
EXP 03/31/2023
CIVIL
STATE OF CALIFORNIA

Project No. 2104

ADU PROGRAM
CITY OF FRESNO
CALIFORNIA

DRAWING TITLE:

ADU 03
CONTEMPORARY
ELEVATIONS SECTIONS

DATE: APRIL 1, 2022
SCALE: AS NOTED
DRAWN BY:

S.200s

© Aaron Neubert Architects, INC. 2021

PLOTTED ON: 6/3/2022 1:59:15 PM
Autodesk Docs://21088 Fresno ADUs_R22/NE_21088 Fresno ADU 03_R22_rvt

CERTIFICATE OF COMPLIANCE **CF1R-PRF-01E**
Project Name: Fresno ADU Units_ADU-3(op1) **Calculation Date/Time:** 2022-04-06T18:15:28+05:30 **(Page 1 of 11)**
Calculation Description: Title 24 Analysis **Input File Name:** 2468_Fresno ADU Units(ADU-3op1), 2600 Fresno St, 3rd Floor, Fresno, CA 93721_Energy Analysis_v8.ribd19x

GENERAL INFORMATION

01	Project Name	Fresno ADU Units_ADU-3(op1)			
02	Run Title	Title 24 Analysis			
03	Project Location	2600 Fresno St			
04	City	Fresno	05	Standards Version	2019
06	Zip code	93721	07	Software Version	EnergyPro 8.3
08	Climate Zone	13	09	Front Orientation (deg/ Cardinal)	AllOrientations
10	Building Type	Single family	11	Number of Dwelling Units	1
12	Project Scope	NewConstruction	13	Number of Bedrooms	2
14	Addition Cond. Floor Area (ft^2)	0	15	Number of Stories	1
16	Existing Cond. Floor Area (ft^2)	n/a	17	Fenestration Average U-factor	0.3
18	Total Cond. Floor Area (ft^2)	633	19	Glazing Percentage (%)	28.78%
20	ADU Bedroom Count	n/a	21	ADU Conditioned Floor Area	n/a
22	Is Natural Gas Available?	Yes			

COMPLIANCE RESULTS

01	Building Complies with Computer Performance
02	This building incorporates features that require field testing and/or verification by a certified HERS rater under the supervision of a CEC-approved HERS provider.
03	This building incorporates one or more Special Features shown below

CERTIFICATE OF COMPLIANCE **CF1R-PRF-01E**
Project Name: Fresno ADU Units_ADU-3(op1) **Calculation Date/Time:** 2022-04-06T18:15:28+05:30 **(Page 2 of 11)**
Calculation Description: Title 24 Analysis **Input File Name:** 2468_Fresno ADU Units(ADU-3op1), 2600 Fresno St, 3rd Floor, Fresno, CA 93721_Energy Analysis_v8.ribd19x

ENERGY DESIGN RATING

	Energy Design Ratings			
	Efficiency[1] (EDR)	Total[2] (EDR)	Efficiency[1] (EDR)	Total[2] (EDR)
Standard Design	53.2	25.8		
Proposed Designs				
North Facing	52	24.6	1.2	1.2
East Facing	52.1	24.7	1.1	1.1
South Facing	52.3	25	0.9	0.8
West Facing	52.1	24.7	1.1	1.1
RESULT: [3] COMPLIES				

[1] Efficiency EDR includes improvements to the building envelope and more efficient equipment
[2] Total EDR includes efficiency and demand response measures such as photovoltaic (PV) systems and batteries
[3] Building complies when efficiency and total compliance margins are greater than or equal to zero

- Standard Design PV Capacity: 2.51 kWdc
- Proposed PV Capacity Scaling: North (2.51 kWdc) East (2.51 kWdc) South (2.51 kWdc) West (2.51 kWdc)

CERTIFICATE OF COMPLIANCE **CF1R-PRF-01E**
Project Name: Fresno ADU Units_ADU-3(op1) **Calculation Date/Time:** 2022-04-06T18:15:28+05:30 **(Page 3 of 11)**
Calculation Description: Title 24 Analysis **Input File Name:** 2468_Fresno ADU Units(ADU-3op1), 2600 Fresno St, 3rd Floor, Fresno, CA 93721_Energy Analysis_v8.ribd19x

ENERGY USE SUMMARY

Energy Use (kTDV/ft^2-yr)	Standard Design	Proposed Design	Compliance Margin	Percent Improvement
Space Heating	16.51	16.03	0.48	2.9
Space Cooling	76.27	73.3	2.97	3.9
IAQ Ventilation	9.75	9.75	0	0
Water Heating	30.81	28.37	2.44	7.9
Self Utilization Credit	n/a	0	0	n/a
North Facing Compliance Total	**133.34**	**127.45**	**5.89**	**4.4**
Space Heating	16.51	15.72	0.79	4.8
Space Cooling	76.27	74.24	2.03	2.7
IAQ Ventilation	9.75	9.75	0	0
Water Heating	30.81	28.37	2.44	7.9
Self Utilization Credit	n/a	0	0	n/a
East Facing Compliance Total	**133.34**	**128.08**	**5.26**	**3.9**
Space Heating	16.51	16.11	0.4	2.4
Space Cooling	76.27	74.95	1.32	1.7
IAQ Ventilation	9.75	9.75	0	0
Water Heating	30.81	28.37	2.44	7.9
Self Utilization Credit	n/a	0	0	n/a
South Facing Compliance Total	**133.34**	**129.18**	**4.16**	**3.1**
Space Heating	16.51	16.5	0.01	0.1
Space Cooling	76.27	73.26	3.01	3.9
IAQ Ventilation	9.75	9.75	0	0
Water Heating	30.81	28.37	2.44	7.9
Self Utilization Credit	n/a	0	0	n/a
West Facing Compliance Total	**133.34**	**127.88**	**5.46**	**4.1**

CERTIFICATE OF COMPLIANCE **CF1R-PRF-01E**
Project Name: Fresno ADU Units_ADU-3(op1) **Calculation Date/Time:** 2022-04-06T18:15:28+05:30 **(Page 4 of 11)**
Calculation Description: Title 24 Analysis **Input File Name:** 2468_Fresno ADU Units(ADU-3op1), 2600 Fresno St, 3rd Floor, Fresno, CA 93721_Energy Analysis_v8.ribd19x

REQUIRED PV SYSTEMS - SIMPLIFIED

01	02	03	04	05	06	07	08	09	10	11	12
DC System Size (kWdc)	Exception	Module Type	Array Type	Power Electronics	CFI	Azimuth (deg)	Tilt Input	Array Angle (deg)	Tilt: (x in 12)	Inverter Eff. (%)	Annual Solar Access (%)
2.51	NA	Standard	Fixed	none	true	150-270	n/a	n/a	<=7:12	96	98

REQUIRED SPECIAL FEATURES

The following are features that must be installed as condition for meeting the modeled energy performance for this computer analysis.

- Indoor air quality, balanced fan
- IAQ Ventilation System: as low as 0.575 W/CFM
- IAQ Ventilation System Heat Recovery: minimum 62 SRE and 66 ASRE
- Variable capacity heat pump compliance option (verification details from VCHP Staff report, Appendix B, and RA3)

CERTIFICATE OF COMPLIANCE **CF1R-PRF-01E**
Project Name: Fresno ADU Units_ADU-3(op1) **Calculation Date/Time:** 2022-04-06T18:15:28+05:30 **(Page 5 of 11)**
Calculation Description: Title 24 Analysis **Input File Name:** 2468_Fresno ADU Units(ADU-3op1), 2600 Fresno St, 3rd Floor, Fresno, CA 93721_Energy Analysis_v8.ribd19x

HERS FEATURE SUMMARY

The following is a summary of the features that must be field-verified by a certified HERS Rater as a condition for meeting the modeled energy performance for this computer analysis. Additional detail is provided in the buildng tables below. Registered CF2Rs and CF3Rs are required to be completed in the HERS Registry

Building-level Verifications:
- Quality insulation installation (QII)
- Indoor air quality ventilation
- Kitchen range hood

Cooling System Verifications:
- Verified EER
- Verified SEER
- Verified Refrigerant Charge
- Airflow in habitable rooms (SC3.1.4.1.7)
- Minimum Airflow according to RA3.3 and SC3.3.3.4.1

Heating System Verifications:
- Verified HSPF
- Verified heat pump rated heating capacity
- CEC certified low-static VCHP system
- Wall-mounted thermostat in zones greater than 150 ft2 (SC3.4.5)
- Verified air filter sizing (SC3.1.4.7)
- Verified air filter pressure drop rating

HVAC Distribution System Verifications:
- Ducts located entirely in conditioned space confirmed by duct leakage testing
- Verified low-leakage ducts in conditioned space must meet maximum 25 cfm leakage to outside (RA3.1.4.3.8)

Domestic Hot Water System Verifications:
- -- None --

BUILDING - FEATURES INFORMATION

01	02	03	04	05	06	07
Project Name	Conditioned Floor Area (ft^2)	Number of Dwelling Units	Number of Bedrooms	Number of Zones	Number of Ventilation Cooling Systems	Number of Water Heating Systems
Fresno ADU Units_ADU-3(op1)	633	1	2	1	0	1

ZONE INFORMATION

01	02	03	04	05	06	07
Zone Name	Zone Type	HVAC System Name	Zone Floor Area (ft^2)	Avg. Ceiling Height	Water Heating System 1	Water Heating System 2
Living Area_ADU3	Conditioned	HVAC System1	633	9.33	DHW Sys 1	N/A

CERTIFICATE OF COMPLIANCE **CF1R-PRF-01E**
Project Name: Fresno ADU Units_ADU-3(op1) **Calculation Date/Time:** 2022-04-06T18:15:28+05:30 **(Page 6 of 11)**
Calculation Description: Title 24 Analysis **Input File Name:** 2468_Fresno ADU Units(ADU-3op1), 2600 Fresno St, 3rd Floor, Fresno, CA 93721_Energy Analysis_v8.ribd19x

OPAQUE SURFACES

01	02	03	04	05	06	07	08
Name	Zone	Construction	Azimuth	Orientation	Gross Area (ft^2)	Window and Door Area (ft2)	Tilt (deg)
Front Wall N	Living Area_ADU3	R-21 Wall_	0	Front	233.25	61.62	90
Rear Wall S	Living Area_ADU3	R-21 Wall_	180	Back	233.25	46.98	90
Left Wall E	Living Area_ADU3	R-21 Wall_	90	Left	233.25	57.96	90
Right Wall W	Living Area_ADU3	R-21 Wall_	270	Right	233.25	35.63	90

OPAQUE SURFACES - CATHEDRAL CEILINGS

01	02	03	04	05	06	07	08	09	10	11
Name	Zone	Construction	Azimuth	Orientation	Area (ft^2)	Skylight Area (ft^2)	Roof Rise (x in 12)	Roof Reflectance	Roof Emittance	Cool Roof
Non Attic Roof	Living Area_ADU3	R-38 Roof No Attic_	90	Left	316.5	0	6	0.1	0.85	No
Non Attic Roof 2	Living Area_ADU3	R-38 Roof No Attic_	270	Right	316.5	0	6	0.1	0.85	No

FENESTRATION / GLAZING

01	02	03	04	05	06	07	08	09	10	11	12	13	14
Name	Type	Surface	Orientation	Azimuth	Width (ft)	Height (ft)	Mult.	Area (ft^2)	U-factor	U-factor Source	SHGC	SHGC Source	Exterior Shading
Window 4032_	Window	Front Wall N	Front	0			1	12.64	0.3	NFRC	0.23	NFRC	Bug Screen
Window 60410_	Window	Front Wall N	Front	0			1	28.98	0.3	NFRC	0.23	NFRC	Bug Screen
Window 30410_	Window	Rear Wall S	Back	180			1	14.49	0.3	NFRC	0.23	NFRC	Bug Screen
Window 30410_ 2	Window	Rear Wall S	Back	180			1	14.49	0.3	NFRC	0.23	NFRC	Bug Screen
Window 3030_	Window	Rear Wall S	Back	180			1	9	0.3	NFRC	0.23	NFRC	Bug Screen
Window 3030_ 2	Window	Rear Wall S	Back	180			1	9	0.3	NFRC	0.23	NFRC	Bug Screen
Window 60410_ 2	Window	Left Wall E	Left	90			1	28.98	0.3	NFRC	0.23	NFRC	Bug Screen
Window 60410_ 3	Window	Left Wall E	Left	90			1	28.98	0.3	NFRC	0.23	NFRC	Bug Screen

CERTIFICATE OF COMPLIANCE **CF1R-PRF-01E**
Project Name: Fresno ADU Units_ADU-3(op1) **Calculation Date/Time:** 2022-04-06T18:15:28+05:30 **(Page 7 of 11)**
Calculation Description: Title 24 Analysis **Input File Name:** 2468_Fresno ADU Units(ADU-3op1), 2600 Fresno St, 3rd Floor, Fresno, CA 93721_Energy Analysis_v8.ribd19x

FENESTRATION / GLAZING

01	02	03	04	05	06	07	08	09	10	11	12	13	14
Name	Type	Surface	Orientation	Azimuth	Width (ft)	Height (ft)	Mult.	Area (ft^2)	U-factor	U-factor Source	SHGC	SHGC Source	Exterior Shading
Window 5014_	Window	Right Wall W	Right	270			1	6.65	0.3	NFRC	0.23	NFRC	Bug Screen
Window 60410_ 4	Window	Right Wall W	Right	270			1	28.98	0.3	NFRC	0.23	NFRC	Bug Screen

OPAQUE DOORS

01	02	03	04
Name	Side of Building	Area (ft^2)	U-factor
Door 3068_	Front Wall N	20	0.2

SLAB FLOORS

01	02	03	04	05	06	07	08
Name	Zone	Area (ft^2)	Perimeter (ft)	Edge Insul. R-value and Depth	Edge Insul. R-value and Depth	Carpeted Fraction	Heated
Slab-on-Grade	Living Area_ADU3	633	100	none	0	80%	No

OPAQUE SURFACE CONSTRUCTIONS

01	02	03	04	05	06	07	08
Construction Name	Surface Type	Construction Type	Framing	Total Cavity R-value	Interior / Exterior Continuous R-value	U-factor	Assembly Layers
R-21 Wall_	Exterior Walls	Wood Framed Wall	2x6 @ 16 in. O. C.	R-21	None / None	0.069	Inside Finish: Gypsum Board Cavity / Frame: R-21 / 2x6 Exterior Finish: 3 Coat Stucco
R-38 Roof No Attic_	Cathedral Ceilings	Wood Framed Ceiling	2x12 @ 16 in. O. C.	R-38	None / None	0.03	Roofing: Light Roof (Asphalt Shingle) Roof Deck: Wood Siding/sheathing/decking Cavity / Frame: R-38 / 2x12 Inside Finish: Gypsum Board

CERTIFICATE OF COMPLIANCE **CF1R-PRF-01E**
Project Name: Fresno ADU Units_ADU-3(op1) **Calculation Date/Time:** 2022-04-06T18:15:28+05:30 **(Page 8 of 11)**
Calculation Description: Title 24 Analysis **Input File Name:** 2468_Fresno ADU Units(ADU-3op1), 2600 Fresno St, 3rd Floor, Fresno, CA 93721_Energy Analysis_v8.ribd19x

BUILDING ENVELOPE - HERS VERIFICATION

01	02	03	04
Quality Insulation Installation (QII)	High R-value Spray Foam Insulation	Building Envelope Air Leakage	CFM50
Required	Not Required	Not Required	n/a

WATER HEATING SYSTEMS

01	02	03	04	05	06	07
Name	System Type	Distribution Type	Water Heater Name (#)	Solar Heating System	Compact Distribution	HERS Verification
DHW Sys 1	Domestic Hot Water (DHW)	Standard Distribution System	DHW Heater 1 (1)	n/a	None	n/a

WATER HEATERS

01	02	03	04	05	06	07	08	09	10	11	12
Name	Heating Element Type	Tank Type	# of Units	Tank Vol. (gal)	Energy Factor or Efficiency	Input Rating or Pilot	Tank Insulation R-value (Int/Ext)	Standby Loss or Recovery Eff	1st Hr. Rating or Flow Rate	NEEA Heat Pump Brand or Model	Tank Location or Ambient Condition
DHW Heater 1	Gas	Consumer Instantaneous	1	0	0.91-UEF	<= 200 kBtu/hr	0	n/a	n/a	n/a	n/a

WATER HEATING - HERS VERIFICATION

01	02	03	04	05	06	07	08
Name	Pipe Insulation	Parallel Piping	Compact Distribution	Compact Distribution Type	Recirculation Control	Central DHW Distribution	Shower Drain Water Heat Recovery
DHW Sys 1 - 1/1	Not Required	Not Required	Not Required	None	Not Required	Not Required	Not Required

CERTIFICATE OF COMPLIANCE **CF1R-PRF-01E**
Project Name: Fresno ADU Units_ADU-3(op1) **Calculation Date/Time:** 2022-04-06T18:15:28+05:30 **(Page 9 of 11)**
Calculation Description: Title 24 Analysis **Input File Name:** 2468_Fresno ADU Units(ADU-3op1), 2600 Fresno St, 3rd Floor, Fresno, CA 93721_Energy Analysis_v8.ribd19x

SPACE CONDITIONING SYSTEMS

01	02	03	04	05	06	07	08	09	10	11
Name	System Type	Heating Unit Name	Cooling Unit Name	Fan Name	Distribution Name	Required Thermostat Type	Status	Verified Existing Condition	Heating Equipment Count	Cooling Equipment Count
HVAC System1	Heat pump heating cooling	Heat Pump System 1	Heat Pump System 1	n/a	n/a	Setback	New	NA	1	1

HVAC - HEAT PUMPS

01	02	03	04	05	06	07	08	09	10	11
			Heating			Cooling				
Name	System Type	Number of Units	HSPF/COP	Cap 47	Cap 17	SEER	EER/CEER	Zonally Controlled	Compressor Type	HERS Verification
Heat Pump System 1	VCHP-ducted	1	10	12000	9600	18.5	11.8	Not Zonal	Single Speed	Heat Pump System 1-hers-htpump

HVAC HEAT PUMPS - HERS VERIFICATION

01	02	03	04	05	06	07	08	09
Name	Verified Airflow	Airflow Target	Verified EER	Verified SEER	Verified Refrigerant Charge	Verified HSPF	Verified Heating Cap 47	Verified Heating Cap 17
Heat Pump System 1-hers-htpump	Not Required	0	Required	Required	Yes	Yes	Yes	Yes

VARIABLE CAPACITY HEAT PUMP COMPLIANCE OPTION - HERS VERIFICATION

01	02	03	04	05	06	07	08	09	10
Name	Certified Low-Static VCHP System	Airflow to Habitable Rooms	Ductless Units in Conditioned Space	Wall Mount Thermostat	Air Filter Sizing & Pressure Drop Rating	Low Leakage Ducts in Conditioned Space	Minimum Airflow per RA3.3 and SC3.3.3.4.1	Certified non-continuous Fan	Indoor Fan not Running Continuously
Heat Pump System 1	Required	Required	Not required	Required	Required	Required	Required	Required	Required

CERTIFICATE OF COMPLIANCE **CF1R-PRF-01E**
Project Name: Fresno ADU Units_ADU-3(op1) **Calculation Date/Time:** 2022-04-06T18:15:28+05:30 **(Page 10 of 11)**
Calculation Description: Title 24 Analysis **Input File Name:** 2468_Fresno ADU Units(ADU-3op1), 2600 Fresno St, 3rd Floor, Fresno, CA 93721_Energy Analysis_v8.ribd19x

IAQ (INDOOR AIR QUALITY) FANS

01	02	03	04	05	06	07
Dwelling Unit	IAQ CFM	IAQ Watts/CFM	IAQ Fan Type	IAQ Recovery Effectiveness - SRE	IAQ Recovery Effectiveness - ASRE	HERS Verification
SFam IAQVentRpt 1-1	40	0.575	Balanced	62	66	Yes

CERTIFICATE OF COMPLIANCE **CF1R-PRF-01E**
Project Name: Fresno ADU Units_ADU-3(op1) **Calculation Date/Time:** 2022-04-06T18:15:28+05:30 **(Page 11 of 11)**
Calculation Description: Title 24 Analysis **Input File Name:** 2468_Fresno ADU Units(ADU-3op1), 2600 Fresno St, 3rd Floor, Fresno, CA 93721_Energy Analysis_v8.ribd19x

DOCUMENTATION AUTHOR'S DECLARATION STATEMENT

1. I certify that this Certificate of Compliance documentation is accurate and complete.

Documentation Author Name: Viranchi Shah	Documentation Author Signature: *Viranchi Shah*
Company: www.gettitle24.com	Signature Date: 04/06/2022
Address: 14730 Beach Blvd., #133	CEA/ HERS Certification Identification (If applicable):
City/State/Zip: La Mirada, CA 90638	Phone: 714-888-4736

RESPONSIBLE PERSON'S DECLARATION STATEMENT

I certify the following under penalty of perjury, under the laws of the State of California:
1. I am eligible under Division 3 of the Business and Professions Code to accept responsibility for the building design identified on this Certificate of Compliance.
2. I certify that the energy features and performance specifications identified on this Certificate of Compliance conform to the requirements of Title 24, Part 1 and Part 6 of the California Code of Regulations.
3. The building design features or system design features identified on this Certificate of Compliance are consistent with the information provided on other applicable compliance documents, worksheets, calculations, plans and specifications submitted to the enforcement agency for approval with this building permit application.

Responsible Designer Name: Jeremy Limsenben	Responsible Designer Signature: *Jeremy Limsenben*
Company: Aaron Neubert Architects	Date Signed: 04/06/2022
Address: 2814 Rowena Avenue Suite 1	License: Architecture
City/State/Zip: Los Angeles, CA 90039	Phone: (323) 953-4700

Digitally signed by ConSol Home Energy Efficiency Rating System Services, Inc. (CHEERS). This digital signature is provided in order to secure the content of this registered document, and in no way implies Registration Provider responsibility for the accuracy of the information.

NOT FOR CONSTRUCTION
PLAN 3
22-TADU-003

T24 PREPARED BY:
www.getTitle24.com
viranchi@gettitle24.com
PHONE: (714) 888-4736

TITLE 24 ENERGY COMPLIANCE REPORT
SHEET 3 OF 5

DATE: 4/6/2022

REGISTERED PROFESSIONAL ENGINEER
SYED P. ALAM
NO. M 27087
EXP. 06/30/2023
MECHANICAL
STATE OF CALIFORNIA

Fresno ADU Units_ADU-3
ADDRESS: 2600 Fresno St
Fresno, CA 93721

T24-3

RESIDENTIAL MEASURES SUMMARY — RMS-1

Project Name: Fresno ADU Units_ADU-1(op1) | Building Type: ☑ Single Family ☐ Multi Family ☐ Addition Alone ☐ Existing+ Addition/Alteration | Date: 4/6/2022
Project Address: 2600 Fresno St Fresno | California Energy Climate Zone: CA Climate Zone 13 | Total Cond. Floor Area: 347 | Addition: n/a | # of Units: 1

INSULATION

Construction	Type	Cavity	Area (ft^2)	Special Features	Status
Wall	Wood Framed	R 20	605		New
Door	Opaque Door	R-5	20		New
Slab	Unheated Slab-on-Grade	- no insulation	347	Perim = 74'	New
Roof	Wood Framed Rafter	R 38	347		New

FENESTRATION — Total Area: 65 | Glazing Percentage: 18.9% | New/Altered Average U-Factor: 0.30

Orientation	Area(ft^2)	U-Fac	SHGC	Overhang	Sidefins	Exterior Shades	Status
Front (N)	3.3	0.300	0.23	none	none	N/A	New
Rear (S)	20.5	0.300	0.23	none	none	N/A	New
Left (E)	12.6	0.300	0.23	none	none	N/A	New
Right (W)	29.0	0.300	0.23	none	none	N/A	New

HVAC SYSTEMS

Qty.	Heating	Min. Eff	Cooling	Min. Eff	Thermostat	Status
1	Split Heat Pump	10.00 HSPF	Split Heat Pump	18.5 SEER	Setback	New

HVAC DISTRIBUTION

Location	Heating	Cooling	Duct Location	Duct R-Value	Status
HVAC System	Ducted	Ducted	Conditioned	6.0	New

WATER HEATING

Qty.	Type	Gallons	Min. Eff	Distribution	Status
1	Small Instantaneous Gas	1	0.91	Standard	New

RESIDENTIAL MEASURES SUMMARY — RMS-1

Project Name: Fresno ADU Units_ADU-2(op1) | Building Type: ☑ Single Family ☐ Addition Alone ☐ Multi Family ☐ Existing+ Addition/Alteration | Date: 4/6/2022
Project Address: 2600 Fresno St Fresno | California Energy Climate Zone: CA Climate Zone 13 | Total Cond. Floor Area: 514 | Addition: n/a | # of Units: 1

INSULATION

Construction	Type	Cavity	Area (ft^2)	Special Features	Status
Wall	Wood Framed	R 20	729		New
Door	Opaque Door	R-5	20		New
Slab	Unheated Slab-on-Grade	- no insulation	514	Perim = 94'	New
Roof	Wood Framed Rafter	R 38	514		New

FENESTRATION — Total Area: 128 | Glazing Percentage: 24.8% | New/Altered Average U-Factor: 0.30

Orientation	Area(ft^2)	U-Fac	SHGC	Overhang	Sidefins	Exterior Shades	Status
Front (N)	29.0	0.300	0.23	none	none	N/A	New
Rear (S)	20.5	0.300	0.23	none	none	N/A	New
Left (E)	12.6	0.300	0.23	none	none	N/A	New
Right (W)	65.5	0.300	0.23	none	none	N/A	New

HVAC SYSTEMS

Qty.	Heating	Min. Eff	Cooling	Min. Eff	Thermostat	Status
1	Split Heat Pump	10.00 HSPF	Split Heat Pump	18.5 SEER	Setback	New

HVAC DISTRIBUTION

Location	Heating	Cooling	Duct Location	Duct R-Value	Status
HVAC System	Ducted	Ducted	Conditioned	6.0	New

WATER HEATING

Qty.	Type	Gallons	Min. Eff	Distribution	Status
1	Small Instantaneous Gas	1	0.91	Standard	New

RESIDENTIAL MEASURES SUMMARY — RMS-1

Project Name: Fresno ADU Units_ADU-3(op1) | Building Type: ☑ Single Family ☐ Addition Alone ☐ Multi Family ☐ Existing+ Addition/Alteration | Date: 4/6/2022
Project Address: 2600 Fresno St Fresno | California Energy Climate Zone: CA Climate Zone 13 | Total Cond. Floor Area: 633 | Addition: n/a | # of Units: 1

INSULATION

Construction	Type	Cavity	Area (ft^2)	Special Features	Status
Wall	Wood Framed	R 20	731		New
Door	Opaque Door	R-5	20		New
Slab	Unheated Slab-on-Grade	- no insulation	633	Perim = 100'	New
Roof	Wood Framed Rafter	R 38	633		New

FENESTRATION — Total Area: 182 | Glazing Percentage: 28.8% | New/Altered Average U-Factor: 0.30

Orientation	Area(ft^2)	U-Fac	SHGC	Overhang	Sidefins	Exterior Shades	Status
Front (N)	41.6	0.300	0.23	none	none	N/A	New
Rear (S)	47.0	0.300	0.23	none	none	N/A	New
Left (E)	58.0	0.300	0.23	none	none	N/A	New
Right (W)	35.6	0.300	0.23	none	none	N/A	New

HVAC SYSTEMS

Qty.	Heating	Min. Eff	Cooling	Min. Eff	Thermostat	Status
1	Split Heat Pump	10.00 HSPF	Split Heat Pump	18.5 SEER	Setback	New

HVAC DISTRIBUTION

Location	Heating	Cooling	Duct Location	Duct R-Value	Status
HVAC System	Ducted	Ducted	Conditioned	6.0	New

WATER HEATING

Qty.	Type	Gallons	Min. Eff	Distribution	Status
1	Small Instantaneous Gas	1	0.91	Standard	New

RESIDENTIAL MEASURES SUMMARY — RMS-1

Project Name: Fresno ADU Units_ADU-4(op1) | Building Type: ☑ Single Family ☐ Addition Alone ☐ Multi Family ☐ Existing+ Addition/Alteration | Date: 4/6/2022
Project Address: 2600 Fresno St Fresno | California Energy Climate Zone: CA Climate Zone 13 | Total Cond. Floor Area: 633 | Addition: n/a | # of Units: 1

INSULATION

Construction	Type	Cavity	Area (ft^2)	Special Features	Status
Wall	Wood Framed	R 20	750		New
Door	Opaque Door	R-5	20		New
Demising	Wood Framed w/o Crawl Space	R 19	633		New
Roof	Wood Framed Rafter	R 38	633		New

FENESTRATION — Total Area: 167 | Glazing Percentage: 26.7% | New/Altered Average U-Factor: 0.30

Orientation	Area(ft^2)	U-Fac	SHGC	Overhang	Sidefins	Exterior Shades	Status
Front (N)	34.4	0.300	0.23	none	none	N/A	New
Rear (S)	44.0	0.300	0.23	none	none	N/A	New
Left (E)	52.0	0.300	0.23	none	none	N/A	New
Right (W)	32.6	0.300	0.23	none	none	N/A	New

HVAC SYSTEMS

Qty.	Heating	Min. Eff	Cooling	Min. Eff	Thermostat	Status
1	Split Heat Pump	10.00 HSPF	Split Heat Pump	18.5 SEER	Setback	New

HVAC DISTRIBUTION

Location	Heating	Cooling	Duct Location	Duct R-Value	Status
HVAC System	Ducted	Ducted	Conditioned	6.0	New

WATER HEATING

Qty.	Type	Gallons	Min. Eff	Distribution	Status
1	Small Instantaneous Gas	1	0.91	Standard	New

RESIDENTIAL MEASURES SUMMARY — RMS-1

Project Name: Fresno ADU Units_ADU-5(op1) | Building Type: ☑ Single Family ☐ Addition Alone ☐ Multi Family ☐ Existing+ Addition/Alteration | Date: 4/6/2022
Project Address: 2600 Fresno St Fresno | California Energy Climate Zone: CA Climate Zone 13 | Total Cond. Floor Area: 1,015 | Addition: n/a | # of Units: 1

INSULATION

Construction	Type	Cavity	Area (ft^2)	Special Features	Status
Wall	Wood Framed	R 20	987		New
Door	Opaque Door	R-5	20		New
Slab	Unheated Slab-on-Grade	- no insulation	1,015	Perim = 140'	New
Roof	Wood Framed Rafter	R 38	1,015		New

FENESTRATION — Total Area: 253 | Glazing Percentage: 24.9% | New/Altered Average U-Factor: 0.30

Orientation	Area(ft^2)	U-Fac	SHGC	Overhang	Sidefins	Exterior Shades	Status
Front (N)	41.6	0.300	0.23	none	none	N/A	New
Rear (S)	61.1	0.300	0.23	none	none	N/A	New
Left (E)	100.6	0.300	0.23	none	none	N/A	New
Right (W)	49.5	0.300	0.23	none	none	N/A	New

HVAC SYSTEMS

Qty.	Heating	Min. Eff	Cooling	Min. Eff	Thermostat	Status
1	Split Heat Pump	10.00 HSPF	Split Heat Pump	21.0 SEER	Setback	New

HVAC DISTRIBUTION

Location	Heating	Cooling	Duct Location	Duct R-Value	Status
HVAC System	Ducted	Ducted	Conditioned	6.0	New

WATER HEATING

Qty.	Type	Gallons	Min. Eff	Distribution	Status
1	Small Instantaneous Gas	1	0.91	Standard	New

2019 Low-Rise Residential Mandatory Measures Summary

NOTE: Low-rise residential buildings subject to the Energy Standards must comply with all applicable mandatory measures, regardless of the compliance approach used. Review the respective section for more information. "Exceptions may apply.
(01/2020)

Building Envelope Measures:

§ 110.6(a)1:	**Air Leakage.** Manufactured fenestration, exterior doors, and exterior pet doors must limit air leakage to 0.3 CFM per square foot or less when tested per NFRC-400, ASTM E283 or AAMA/WDMA/CSA 101/I.S.2/A440-2011.*
§ 110.6(a)5:	**Labelling.** Fenestration products and exterior doors must have a label meeting the requirements of § 10-111(a).
§ 110.6(b):	**Field fabricated exterior doors and fenestration** products must use U-factors and solar heat gain coefficient (SHGC) values from Tables 110.6-A, 110.6-B, or JA4.5 for exterior doors. They must be caulked and/or weather-stripped.*
§ 110.7:	**Air Leakage.** All joints, penetrations, and other openings in the building envelope that are potential sources of air leakage must be caulked, gasketed, or weather stripped.
§ 110.8(a):	**Insulation Certification by Manufacturers.** Insulation must be certified by the Department of Consumer Affairs, Bureau of Household Goods and Services (BHGS).
§ 110.8(g):	**Insulation Requirements for Heated Slab Floors.** Heated slab floors must be insulated per the requirements of § 110.8(g).
§ 110.8(i):	**Roofing Products Solar Reflectance and Thermal Emittance.** The thermal emittance and aged solar reflectance values of the roofing material must meet the requirements of § 110.8(i) and be labeled per §10-113 when the installation of a cool roof is specified on the CF1R.
§ 110.8(j):	**Radiant Barrier.** When required, radiant barriers must have an emittance of 0.05 or less and be certified to the Department of Consumer Affairs.
§ 150.0(a):	**Ceiling and Rafter Roof Insulation.** Minimum R-22 insulation in wood-frame ceiling; or the weighted average U-factor must not exceed 0.043. Minimum R-19 or weighted average U-factor of 0.064 or less in a *rafter roof alteration*. Attic access doors must have permanently attached insulation using adhesive or mechanical fasteners. The attic access must be gasketed to prevent air leakage. Insulation must be installed in direct contact with a continuous roof or ceiling which is sealed to limit infiltration and exfiltration as specified in § 110.7, including but not limited to placing insulation either above or below the roof deck or on top of a drywall ceiling.*
§ 150.0(b):	**Loose-fill Insulation.** Loose fill insulation must meet the manufacturer's required density for the labeled R-value.
§ 150.0(c):	**Wall Insulation.** Minimum R-13 insulation in 2x4 inch wood framing wall or have a U-factor of 0.102 or less, or R-20 in 2x6 inch wood framing or have a U-factor of 0.071 or less. Opaque non-framed assemblies must have an overall assembly U-factor not exceeding 0.102. Masonry walls must meet Tables 150.1-A or B.*
§ 150.0(d):	**Raised-floor Insulation.** Minimum R-19 insulation in raised wood framed floor or 0.037 maximum U-factor.*
§ 150.0(f):	**Slab Edge Insulation.** Slab edge insulation must meet all of the following: have a water absorption rate, for the insulation material alone without facings, no greater than 0.3 percent; have a water vapor permeance no greater than 2.0 perm per inch; be protected from physical damage and UV light deterioration; and, when installed as part of a heated slab floor, meet the requirements of § 110.8(g).
§ 150.0(g)1:	**Vapor Retarder.** In climate zones 1 through 16, the earth floor of unvented crawl space must be covered with a Class I or Class II vapor retarder. This requirement also applies to controlled ventilation crawl space for buildings complying with the exception to § 150.0(d).
§ 150.0(g)2:	**Vapor Retarder.** In climate zones 14 and 16, a Class I or Class II vapor retarder must be installed on the conditioned space side of all insulation in all exterior walls, vented attics, and unvented attics with air-permeable insulation.
§ 150.0(q):	**Fenestration Products.** Fenestration, including skylights, separating conditioned space from unconditioned space or outdoors must have a maximum U-factor of 0.58; or the weighted average U-factor of all fenestration must not exceed 0.58.*

Fireplaces, Decorative Gas Appliances, and Gas Log Measures:

§ 110.5(e)	**Pilot Light.** Continuously burning pilot lights are not allowed for indoor and outdoor fireplaces.
§ 150.0(e)1:	**Closable Doors.** Masonry or factory-built fireplaces must have a closable metal or glass door covering the entire opening of the firebox.
§ 150.0(e)2:	**Combustion Intake.** Masonry or factory-built fireplaces must have a combustion outside air intake, which is at least six square inches in area and is equipped with a readily accessible, operable, and tight-fitting damper or combustion-air control device.*
§ 150.0(e)3:	**Flue Damper.** Masonry or factory-built fireplaces must have a flue damper with a readily accessible control.*

Space Conditioning, Water Heating, and Plumbing System Measures:

§ 110.0-§ 110.3:	**Certification.** Heating, ventilation and air conditioning (HVAC) equipment, water heaters, showerheads, faucets, and all other regulated appliances must be certified by the manufacturer to the California Energy Commission.*
§ 110.2(a):	**HVAC Efficiency.** Equipment must meet the applicable efficiency requirements in Table 110.2-A through Table 110.2-K.*
§ 110.2(b):	**Controls for Heat Pumps with Supplementary Electric Resistance Heaters.** Heat pumps with supplementary electric resistance heaters must have controls that prevent supplementary heater operation when the heating load can be met by the heat pump alone; and in which the cut-on temperature for compression heating is higher than the cut-on temperature for supplementary heating, and the cut-off temperature for compression heating is higher than the cut-off temperature for supplementary heating.*
§ 110.2(c):	**Thermostats.** All heating or cooling systems not controlled by a central energy management control system (EMCS) must have a setback thermostat.*
§ 110.3(c)4:	**Water Heating Recirculation Loops Serving Multiple Dwelling Units.** Water heating recirculation loops serving multiple dwelling units must meet the air release valve, backflow prevention, pump priming, pump isolation valve, and recirculation loop connection requirements of § 110.3(c)4.
§ 110.3(c)6:	**Isolation Valves.** Instantaneous water heaters with an input rating greater than 6.8 kBtu per hour (2 kW) must have isolation valves with hose bibbs or other fittings on both cold and hot water lines to allow for flushing the water heater when the valves are closed.
§ 110.5:	**Pilot Lights.** Continuously burning pilot lights are prohibited for natural gas: fan-type central furnaces; household cooking appliances (except appliances without an electrical supply voltage connection with pilot lights that consume less than 150 Btu per hour); and pool and spa heaters.*
§ 150.0(h)1:	**Building Cooling and Heating Loads.** Heating and/or cooling loads are calculated in accordance with the ASHRAE Handbook, Equipment Volume, Applications Volume, and Fundamentals Volume; the SMACNA Residential Comfort System Installation Standards Manual; or the ACCA Manual J using design conditions specified in § 150.0(h)2..

2019 Low-Rise Residential Mandatory Measures Summary

§ 150.0(h)3A:	**Clearances.** Air conditioner and heat pump outdoor condensing units must have a clearance of at least five feet from the outlet of any dryer
§ 150.0(h)3B:	**Liquid Line Drier.** Air conditioners and heat pump systems must be equipped with liquid line filter driers if required, as specified by the manufacturer's instructions.
§ 150.0(j)1:	**Storage Tank Insulation.** Unfired hot water tanks, such as storage tanks and backup storage tanks for solar water-heating systems, must have a minimum of R-12 external insulation or R-16 internal insulation where the internal insulation R-value is indicated on the exterior of the tank.
§ 150.0(j)2A:	**Water Piping, Solar Water-heating System Piping, and Space Conditioning System Line Insulation.** All domestic hot water piping must be insulated as specified in Section 609.11 of the California Plumbing Code. In addition, the following piping conditions must have a minimum insulation wall thickness of one inch or a minimum insulation R-value of 7.7: the first five feet of cold water pipes from the storage tank; all hot water piping with a nominal diameter equal to or greater than 3/4 inch and less than one inch; all hot water piping with a nominal diameter less than 3/4 inch that is: associated with a domestic hot water recirculation system, from the heating source to storage tank or between tanks, buried below grade, and from the heating source to kitchen fixtures.*
§ 150.0(j)3:	**Insulation Protection.** Piping insulation must be protected from damage, including that due to sunlight, moisture, equipment maintenance, and wind as required by Section 120.3(b). Insulation exposed to weather must be water retardant and protected from UV light (no adhesive tapes). Insulation covering chilled water piping and refrigerant suction piping located outside the conditioned space must include, or be protected by, a Class I or Class II vapor retarder. Pipe insulation buried below grade must be installed in a waterproof and non-crushable casing or sleeve.
§ 150.0(n)1:	**Gas or Propane Water Heating Systems.** Systems using gas or propane water heaters to serve individual dwelling units must include all of the following: A dedicated 125 volt, 20 amp electrical receptacle connected to the electric panel with a 120/240 volt 3 conductor, 10 AWG copper branch circuit, within three feet of the water heater without obstruction. Both ends of the unused conductor must be labeled with the word "spare" and be electrically isolated. Have a reserved single pole circuit breaker space in the electrical panel adjacent to the circuit breaker for the branch circuit and labeled with the words "Future 240V Use." a Category III or IV vent, or a Type B vent with straight pipe between the outside termination and the space where the water heater is installed; a condensate drain that is no more than two inches higher than the base of the water heater, and allows natural draining without pump assistance; and a gas supply line with a capacity of at least 200,000 Btu per hour.
§ 150.0(n)2:	**Recirculating Loops.** Recirculating loops serving multiple dwelling units must meet the requirements of § 110.3(c)5.
§ 150.0(n)3:	**Solar Water-heating Systems.** Solar water-heating systems and collectors must be certified and rated by the Solar Rating and Certification Corporation (SRCC), the International Association of Plumbing and Mechanical Officials, Research and Testing (IAPMO R&T), or by a listing agency that is approved by the Executive Director.

Ducts and Fans Measures:

§ 110.8(d)3:	**Ducts.** Insulation installed on an existing space-conditioning duct must comply with § 604.0 of the California Mechanical Code (CMC). If a contractor installs the insulation, the contractor must certify to the customer, in writing, that the insulation meets this requirement.
§ 150.0(m)1:	**CMC Compliance.** All air-distribution system ducts and plenums must meet the requirements of the CMC §§ 601.0, 602.0, 603.0, 604.0, 605.0 and ANSI/SMACNA-006-2006 HVAC Duct Construction Standards Metal and Flexible 3rd Edition. Portions of supply-air and return-air ducts and plenums must be insulated to a minimum installed level of R-6.0 or a minimum installed level of R-4.2 when ducts are entirely in conditioned space as confirmed through field verification and diagnostic testing (RA3.1.4.3.8). Portions of the duct system completely exposed and surrounded by directly conditioned space are not required to be insulated. Connections of metal ducts and inner core of flexible ducts must be mechanically fastened. Openings must be sealed with mastic, tape, or other duct-closure system that meets the applicable requirements of UL 181, UL 181A, or UL 181B or aerosol sealant that meets the requirements of UL 723. If mastic or tape is used to seal openings greater than ¼ inch, the combination of mastic and either mesh or tape must be used. Building cavities, support platforms for air handlers, and plenums designed or constructed with materials other than sealed sheet metal, duct board or flexible duct must not be used to convey conditioned air. Building cavities and support platforms may contain ducts. Ducts installed in cavities and support platforms must not be compressed to cause reductions in the cross-sectional area.*
§ 150.0(m)2:	**Factory-Fabricated Duct Systems.** Factory-fabricated duct systems must comply with applicable requirements for duct construction, connections, and closures; joints and seams of duct systems and their components must not be sealed with cloth back rubber adhesive duct tapes unless such tape is used in combination with mastic and draw bands.
§ 150.0(m)3:	**Field-Fabricated Duct Systems.** Field-fabricated duct systems must comply with applicable requirements for: pressure-sensitive tapes, mastics, sealants, and other requirements specified for duct construction.
§ 150.0(m)7:	**Backdraft Damper.** Fan systems that exchange air between the conditioned space and outdoors must have backdraft or automatic dampers.
§ 150.0(m)8:	**Gravity Ventilation Dampers.** Gravity ventilating systems serving conditioned space must have either automatic or readily accessible, manually operated dampers in all openings to the outside, except combustion inlet and outlet air openings and elevator shaft vents.
§ 150.0(m)9:	**Protection of Insulation.** Insulation must be protected from damage, sunlight, moisture, equipment maintenance, and wind. Insulation exposed to weather must be suitable for outdoor service. For example, protected by aluminum, sheet metal, painted canvas, or plastic cover. Cellular foam insulation must be protected as above or painted with a coating that is water retardant and provides shielding from solar radiation.
§ 150.0(m)10:	**Porous Inner Core Flex Duct.** Porous inner core flex ducts must have a non-porous layer between the inner core and outer vapor barrier.
§ 150.0(m)11:	**Duct System Sealing and Leakage Test.** When space conditioning systems use forced air duct systems to supply conditioned air to an occupiable space, the ducts must be sealed and duct leakage tested, as confirmed through field verification and diagnostic testing, in accordance with § 150.0(m)11 and Reference Residential Appendix RA3.
§ 150.0(m)12:	**Air Filtration.** Space conditioning systems with ducts exceeding 10 feet and the supply side of ventilation systems must have MERV 13 or equivalent filters. Filters for space conditioning systems must have a two inch depth or can be one inch if sized per Equation 150.0-A. Pressure drops and labeling must meet the requirements in §150.0(m)12. Filters must be accessible for regular service.*
§ 150.0(m)13:	**Space Conditioning System Airflow Rate and Fan Efficacy.** Space conditioning systems that use ducts to supply cooling must have a hole for the placement of a static pressure probe, or a permanently installed static pressure probe in the supply plenum. Airflow must be ≥ 350 CFM per ton of nominal cooling capacity, and an air-handling unit fan efficacy ≤ 0.45 watts per CFM for gas furnace air handlers and ≤ 0.58 watts per CFM for all others. Small duct high velocity systems must provide an airflow ≥ 250 CFM per ton of nominal cooling capacity, and an air-handling unit fan efficacy ≤ 0.62 watts per CFM. Field verification testing is required in accordance with Reference Residential Appendix RA3.3.*

2019 Low-Rise Residential Mandatory Measures Summary

Requirements for Ventilation and Indoor Air Quality:

§ 150.0(o)1:	**Requirements for Ventilation and Indoor Air Quality.** All dwelling units must meet the requirements of ASHRAE Standard 62.2, Ventilation and Acceptable Indoor Air Quality in Residential Buildings subject to the amendments specified in § 150.0(o)1.
§ 150.0(o)1C:	**Single Family Detached Dwelling Units.** Single family detached dwelling units, and attached dwelling units not sharing ceilings or floors with other dwelling units, occupiable spaces, public garages, or commercial spaces must have mechanical ventilation airflow provided at rates determined by ASHRAE 62.2 Sections 4.1.1 and 4.1.2 and as specified in § 150.0(o)1C.
§ 150.0(o)1E:	**Multifamily Attached Dwelling Units.** Multifamily attached dwelling units must have mechanical ventilation airflow provided at rates in accordance with Equation 150.0-B and must be either a balanced system or continuous supply or continuous exhaust system. If a balanced system is not used, all units in the building must use the same system type and the dwelling-unit envelope leakage must be ≤ 0.3 CFM at 50 Pa (0.2 inch water) per square foot of dwelling unit envelope surface area and verified in accordance with Reference Residential Appendix RA3.8.
§ 150.0(o)1F:	**Multifamily Building Central Ventilation Systems.** Central ventilation systems that serve multiple dwelling units must be balanced to provide ventilation airflow for each dwelling unit served at a rate equal to or greater than the rate specified by Equation 150.0-B. All unit airflows must be within 20 percent of the unit with the lowest airflow rate as it relates to the individual unit's minimum required airflow rate needed for compliance.
§ 150.0(o)1G:	**Kitchen Range Hoods.** Kitchen range hoods must be rated for sound in accordance with Section 7.2 of ASHRAE 62.2.
§ 150.0(o)2:	**Field Verification and Diagnostic Testing.** Dwelling unit ventilation airflow must be verified in accordance with Reference Residential Appendix RA3.7. A kitchen range hood must be verified in accordance with Reference Residential Appendix RA3.7.4.3 to confirm it is rated by HVI to comply with the airflow rates and sound requirements as specified in Section 5 and 7.2 of ASHRAE 62.2.

Pool and Spa Systems and Equipment Measures:

§ 110.4(a):	**Certification by Manufacturers.** Any pool or spa heating system or equipment must be certified to have all of the following: a thermal efficiency that complies with the Appliance Efficiency Regulations; an on-off switch mounted outside of the heater that allows shutting off the heater without adjusting the thermostat setting; a permanent weatherproof plate or card with operating instructions; and must not use electric resistance heating.*
§ 110.4(b)1:	**Piping.** Any pool or spa heating system or equipment must be installed with at least 36 inches of pipe between the filter and the heater, or dedicated suction and return lines, or built-in or built-up connections to allow for future solar heating.*
§ 110.4(b)2:	**Covers.** Outdoor pools or spas that have a heat pump or gas heater must have a cover.
§ 110.4(b)3:	**Directional Inlets and Time Switches for Pools.** Pools must have directional inlets that adequately mix the pool water, and a time switch that will allow all pumps to be set or programmed to run only during off-peak electric demand periods.
§ 110.5:	**Pilot Light.** Natural gas pool and spa heaters must not have a continuously burning pilot light.
§ 150.0(p):	**Pool Systems and Equipment Installation.** Residential pool systems or equipment must meet the specified requirements for pump sizing, flow rate, piping, filters, and valves.*

Lighting Measures:

§ 110.9:	**Lighting Controls and Components.** All lighting control devices and systems, ballasts, and luminaires must meet the applicable requirements of § 110.9.*
§ 150.0(k)1A:	**Luminaire Efficacy.** All installed luminaires must meet the requirements in Table 150.0-A.
§ 150.0(k)1B:	**Blank Electrical Boxes.** The number of electrical boxes that are more than five feet above the finished floor and do not contain a luminaire or other device must be no greater than the number of bedrooms. These electrical boxes must be served by a dimmer, vacancy sensor control, or fan speed control.
§ 150.0(k)1C:	**Recessed Downlight Luminaires in Ceilings.** Luminaires recessed into ceilings must meet all of the requirements for: insulation contact (IC) labeling; air leakage; sealing; maintenance; and socket and light source as described in § 150.0(k)1C.
§ 150.0(k)1D:	**Electronic Ballasts for Fluorescent Lamps.** Ballasts for fluorescent lamps rated 13 watts or greater must be electronic and must have an output frequency no less than 20 kHz.
§ 150.0(k)1E:	**Night Lights, Step Lights, and Path Lights.** Night lights, step lights and path lights are not required to comply with Table 150.0-A or be controlled by vacancy sensors provided they are rated to consume no more than 5 watts of power and emit no more than 150 lumens.
§ 150.0(k)1F:	**Lighting Integral to Exhaust Fans.** Lighting integral to exhaust fans (except when installed by the manufacturer in kitchen exhaust hoods) must meet the applicable requirements of § 150.0(k).*
§ 150.0(k)1G:	**Screw based luminaires.** Screw based luminaires must contain lamps that comply with Reference Joint Appendix JA8.*
§ 150.0(k)1H:	**Light Sources in Enclosed or Recessed Luminaires.** Lamps and other separable light sources that are not compliant with the JA8 elevated temperature requirements, including marking requirements, must not be installed in enclosed or recessed luminaires.
§ 150.0(k)1I:	**Light Sources in Drawers, Cabinets, and Linen Closets.** Light sources internal to drawers, cabinetry or linen closets are not required to comply with Table 150.0-A or be controlled by vacancy sensors provided that they are rated to consume no more than 5 watts of power, emit no more than 150 lumens, and are equipped with controls that automatically turn the lighting off when the drawer, cabinet or linen closet is closed.
§ 150.0(k)2A:	**Interior Switches and Controls.** All forward phase cut dimmers used with LED light sources must comply with NEMA SSL 7A.
§ 150.0(k)2B:	**Interior Switches and Controls.** Exhaust fans must be controlled separately from lighting systems.*
§ 150.0(k)2C:	**Interior Switches and Controls.** Lighting must have readily accessible wall-mounted controls that allow the lighting to be manually turned ON and OFF.*
§ 150.0(k)2D:	**Interior Switches and Controls.** Controls and equipment must be installed in accordance with manufacturer's instructions.
§ 150.0(k)2E:	**Interior Switches and Controls.** Controls must not bypass a dimmer, occupant sensor, or vacancy sensor function if the control is installed to comply with § 150.0(k).
§ 150.0(k)2F:	**Interior Switches and Controls.** Lighting controls must comply with the applicable requirements of § 110.9.

PRELIMINARY NOT FOR CONSTRUCTION

T24 PREPARED BY:
www.getTitle24.com
viranchi@getitle24.com
PHONE: (714) 888-4736

TITLE 24 MANDATORY MEASURES
SHEET 1 OF 2

DATE: 4/6/2022

REGISTERED PROFESSIONAL ENGINEER
SYED P. ALAM
No. M 27087
EXP. 06/30/2023
MECHANICAL
STATE OF CALIFORNIA

Fresno ADU Units_ADU-1,2,3,4,5
ADDRESS: 2600 Fresno St
Fresno, CA 93721

MM-1

2019 Low-Rise Residential Mandatory Measures Summary

§ 150.0(k)2G:	**Interior Switches and Controls.** An energy management control system (EMCS) may be used to comply with control requirements if it: provides functionality of the specified control according to § 110.9; meets the Installation Certificate requirements of § 130.4; meets the EMCS requirements of § 130.0(e); and meets all other requirements in § 150.0(k)2.
§ 150.0(k)2H:	**Interior Switches and Controls.** A multiscene programmable controller may be used to comply with dimmer requirements in § 150.0(k) if it provides the functionality of a dimmer according to § 110.9, and complies with all other applicable requirements in § 150.0(k)2.
§ 150.0(k)2I:	**Interior Switches and Controls.** In bathrooms, garages, laundry rooms, and utility rooms, at least one luminaire in each of these spaces must be controlled by an occupant sensor or a vacancy sensor providing automatic-off functionality. If an occupant sensor is installed, it must be initially configured to manual-on operation using the manual control required under Section 150.0(k)2C.
§ 150.0(k)2J:	**Interior Switches and Controls.** Luminaires that are or contain light sources that meet Reference Joint Appendix JA8 requirements for dimming, and that are not controlled by occupancy or vacancy sensors, must have dimming controls.'
§ 150.0(k)2K:	**Interior Switches and Controls.** Under cabinet lighting must be controlled separately from ceiling-installed lighting systems.
§ 150.0(k)3A:	**Residential Outdoor Lighting.** For single-family residential buildings, outdoor lighting permanently mounted to a residential building, or to other buildings on the same lot, must meet the requirement in item § 150.0(k)3Ai (ON and OFF switch) and the requirements in either § 150.0(k)3Aii (photocell and either a motion sensor or automatic time switch control) or § 150.0(k)3Aiii (astronomical time clock), or an EMCS.
§ 150.0(k)3B:	**Residential Outdoor Lighting.** For low-rise residential buildings with four or more dwelling units, outdoor lighting for private patios, entrances, balconies, and porches; and residential parking lots and carports with less than eight vehicles per site must comply with either § 150.0(k)3A or with the applicable requirements in Sections 110.9, 130.0, 130.2, 130.4, 140.7 and 141.0.
§ 150.0(k)3C:	**Residential Outdoor Lighting.** For low-rise residential buildings with four or more dwelling units, any outdoor lighting for residential parking lots or carports with a total of eight or more vehicles per site and any outdoor lighting not regulated by § 150.0(k)3B or § 150.0(k)3D must comply with the applicable requirements in Sections 110.9, 130.0, 130.2, 130.4, 140.7 and 141.0.
§ 150.0(k)4:	**Internally illuminated address signs.** Internally illuminated address signs must comply with § 140.8; or must consume no more than 5 watts of power as determined according to § 130.0(c).
§ 150.0(k)5:	**Residential Garages for Eight or More Vehicles.** Lighting for residential parking garages for eight or more vehicles must comply with the applicable requirements for nonresidential garages in Sections 110.9, 130.0, 130.1, 130.4, 140.6, and 141.0.
§ 150.0(k)6A:	**Interior Common Areas of Low-rise Multifamily Residential Buildings.** In a low-rise multifamily residential building where the total interior common area in a single building equals 20 percent or less of the floor area, permanently installed lighting for the interior common areas in that building must be comply with Table 150.0-A and be controlled by an occupant sensor.
§ 150.0(k)6B:	**Interior Common Areas of Low-rise Multifamily Residential Buildings.** In a low-rise multifamily residential building where the total interior common area in a single building equals more than 20 percent of the floor area, permanently installed lighting for the interior common areas in that building must: i. Comply with the applicable requirements in Sections 110.9, 130.0, 130.1, 140.6 and 141.0; and ii. Lighting installed in corridors and stairwells must be controlled by occupant sensors that reduce the lighting power in each space by at least 50 percent. The occupant sensors must be capable of turning the light fully on and off from all designed paths of ingress and egress.
Solar Ready Buildings:	
§ 110.10(a)1:	**Single Family Residences.** Single family residences located in subdivisions with 10 or more single family residences and where the application for a tentative subdivision map for the residences has been deemed complete and approved by the enforcement agency, which do not have a photovoltaic system installed, must comply with the requirements of § 110.10(b) through § 110.10(e).
§ 110.10(a)2:	**Low-rise Multifamily Buildings.** Low-rise multi-family buildings that do not have a photovoltaic system installed must comply with the requirements of § 110.10(b) through § 110.10(d).
§ 110.10(b)1:	**Minimum Solar Zone Area.** The solar zone must have a minimum total area as described below. The solar zone must comply with access, pathway, smoke ventilation, and spacing requirements as specified in Title 24, Part 9 or other parts of Title 24 or in any requirements adopted by a local jurisdiction. The solar zone total area must be comprised of areas that have no dimension less than 5 feet and are no less than 80 square feet each for buildings with roof areas less than or equal to 10,000 square feet or no less than 160 square feet each for buildings with roof areas greater than 10,000 square feet. For single family residences, the solar zone must be located on the roof or overhang of the building and have a total area no less than 250 square feet. For low-rise multi-family buildings the solar zone must be located on the roof or overhang of the building, or on the roof or overhang of another structure located within 250 feet of the building, or on covered parking installed with the building project, and have a total area no less than 15 percent of the total roof area of the building excluding any skylight area. The solar zone requirement is applicable to the entire building, including mixed occupancy.'
§ 110.10(b)2:	**Azimuth.** All sections of the solar zone located on steep-sloped roofs must be oriented between 90 degrees and 300 degrees of true north.
§ 110.10(b)3A:	**Shading.** The solar zone must not contain any obstructions, including but not limited to: vents, chimneys, architectural features, and roof mounted equipment.'
§ 110.10(b)3B:	**Shading.** Any obstruction located on the roof or any other part of the building that projects above a solar zone must be located at least twice the distance, measured in the horizontal plane, of the height difference between the highest point of the obstruction and the horizontal projection of the nearest point of the solar zone, measured in the vertical plane.'
§ 110.10(b)4:	**Structural Design Loads on Construction Documents.** For areas of the roof designated as a solar zone, the structural design loads for roof dead load and roof live load must be clearly indicated on the construction documents.
§ 110.10(c):	**Interconnection Pathways.** The construction documents must indicate: a location reserved for inverters and metering equipment and a pathway reserved for routing of conduit from the solar zone to the point of interconnection with the electrical service; and for single family residences and central water-heating systems, a pathway reserved for routing plumbing from the solar zone to the water-heating system.
§ 110.10(d):	**Documentation.** A copy of the construction documents or a comparable document indicating the information from § 110.10(b) through § 110.10(c) must be provided to the occupant.
§ 110.10(e)1:	**Main Electrical Service Panel.** The main electrical service panel must have a minimum busbar rating of 200 amps.
§ 110.10(e)2:	**Main Electrical Service Panel.** The main electrical service panel must have a reserved space to allow for the installation of a double pole circuit breaker for a future solar electric installation. The reserved space must be permanently marked as "For Future Solar Electric".

HVAC SYSTEM HEATING AND COOLING LOADS SUMMARY

Project Name: Fresno ADU Units_ADU-1(op1) — Date: 4/6/2022
System Name: HVAC System — Floor Area: 347

ENGINEERING CHECKS		SYSTEM LOAD	COIL COOLING PEAK CFM	COIL COOLING PEAK Sensible	COIL COOLING PEAK Latent	COIL HTG. PEAK CFM	COIL HTG. PEAK Sensible
Number of Systems	1						
Heating System							
Output per System	12,000	Total Room Loads	193	4,095	174	164	6,459
Total Output (Btuh)	12,000	Return Vented Lighting		0			
Output (Btuh/sqft)	34.6	Return Air Ducts		54			76
Cooling System		Return Fan		0			
Output per System	18,000	Ventilation	0	0	0	0	0
Total Output (Btuh)	18,000	Supply Fan		0			0
Total Output (Tons)	1.5	Supply Air Ducts		54			76
Total Output (Btuh/sqft)	51.9						
Total Output (sqft/Ton)	231.3	TOTAL SYSTEM LOAD		4,203	174		6,612
Air System							
CFM per System	800	**HVAC EQUIPMENT SELECTION**					
Airflow (cfm)	800	Carrier 38MGRQ18B3 Mini-Split Heat Pump		14,097	1,885		7,088
Airflow (cfm/sqft)	2.31						
Airflow (cfm/Ton)	533.3						
Outside Air (%)	0.0%	Total Adjusted System Output (Adjusted for Peak Design conditions)		14,097	1,885		7,088
Outside Air (cfm/sqft)	0.00						
Note: values above given at ARI conditions		TIME OF SYSTEM PEAK		Aug 3 PM			Jan 1 AM

HEATING SYSTEM PSYCHROMETRICS (Airstream Temperatures at Time of Heating Peak)

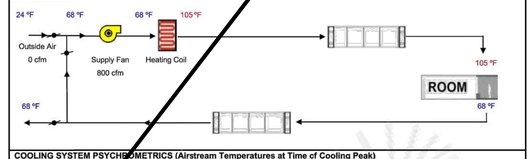

COOLING SYSTEM PSYCHROMETRICS (Airstream Temperatures at Time of Cooling Peak)

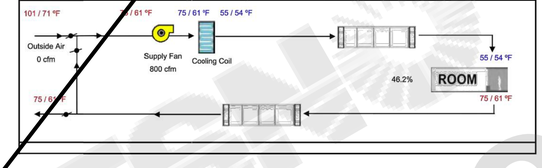

HVAC SYSTEM HEATING AND COOLING LOADS SUMMARY

Project Name: Fresno ADU Units_ADU-2(op1) — Date: 4/6/2022
System Name: HVAC System — Floor Area: 314

ENGINEERING CHECKS		SYSTEM LOAD	COIL COOLING PEAK CFM	COIL COOLING PEAK Sensible	COIL COOLING PEAK Latent	COIL HTG. PEAK CFM	COIL HTG. PEAK Sensible
Number of Systems	1						
Heating System							
Output per System	12,000	Total Room Loads	303	6,444	259	225	8,854
Total Output (Btuh)	12,000	Return Vented Lighting		0			
Output (Btuh/sqft)	23.3	Return Air Ducts		85			105
Cooling System		Return Fan		0			0
Output per System	18,000	Ventilation	0	0	0	0	0
Total Output (Btuh)	18,000	Supply Fan		0			0
Total Output (Tons)	1.5	Supply Air Ducts		85			105
Total Output (Btuh/sqft)	35.0						
Total Output (sqft/Ton)	342.7	TOTAL SYSTEM LOAD		6,615	258		9,064
Air System							
CFM per System	800	**HVAC EQUIPMENT SELECTION**					
Airflow (cfm)	800	Carrier 38MGRQ18B3 Mini-Split Heat Pump		14,093	1,901		7,088
Airflow (cfm/sqft)	1.56						
Airflow (cfm/Ton)	533.3						
Outside Air (%)	0.0%	Total Adjusted System Output (Adjusted for Peak Design conditions)		14,093	1,901		7,088
Outside Air (cfm/sqft)	0.00						
Note: values above given at ARI conditions		TIME OF SYSTEM PEAK		Aug 3 PM			Jan 1 AM

HEATING SYSTEM PSYCHROMETRICS (Airstream Temperatures at Time of Heating Peak)

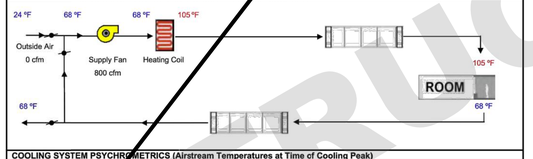

COOLING SYSTEM PSYCHROMETRICS (Airstream Temperatures at Time of Cooling Peak)

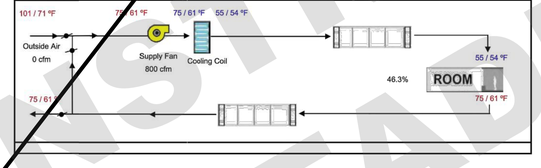

HVAC SYSTEM HEATING AND COOLING LOADS SUMMARY

Project Name: Fresno ADU Units_ADU-3(op1) — Date: 4/6/2022
System Name: HVAC System — Floor Area: 633

ENGINEERING CHECKS		SYSTEM LOAD	COIL COOLING PEAK CFM	COIL COOLING PEAK Sensible	COIL COOLING PEAK Latent	COIL HTG. PEAK CFM	COIL HTG. PEAK Sensible
Number of Systems	1						
Heating System							
Output per System	12,000	Total Room Loads	375	7,948	317	258	10,154
Total Output (Btuh)	12,000	Return Vented Lighting		0			
Output (Btuh/sqft)	19.0	Return Air Ducts		105			120
Cooling System		Return Fan		0			0
Output per System	18,000	Ventilation	0	0	0	0	0
Total Output (Btuh)	18,000	Supply Fan		0			0
Total Output (Tons)	1.5	Supply Air Ducts		105			120
Total Output (Btuh/sqft)	28.4						
Total Output (sqft/Ton)	422.0	TOTAL SYSTEM LOAD		8,158	317		10,394
Air System							
CFM per System	800	**HVAC EQUIPMENT SELECTION**					
Airflow (cfm)	800	Carrier 38MGRQ18B3 Mini-Split Heat Pump		14,088	1,914		7,088
Airflow (cfm/sqft)	1.26						
Airflow (cfm/Ton)	533.3						
Outside Air (%)	0.0%	Total Adjusted System Output (Adjusted for Peak Design conditions)		14,088	1,914		7,088
Outside Air (cfm/sqft)	0.00						
Note: values above given at ARI conditions		TIME OF SYSTEM PEAK		Aug 3 PM			Jan 1 AM

HEATING SYSTEM PSYCHROMETRICS (Airstream Temperatures at Time of Heating Peak)

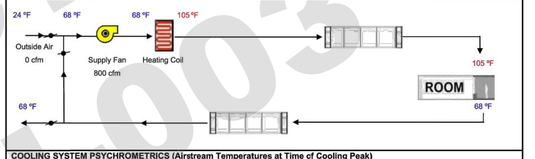

COOLING SYSTEM PSYCHROMETRICS (Airstream Temperatures at Time of Cooling Peak)

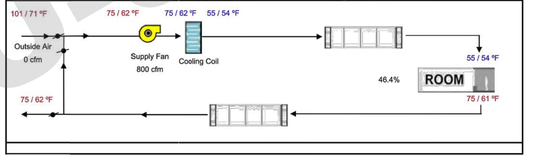

HVAC SYSTEM HEATING AND COOLING LOADS SUMMARY

Project Name: Fresno ADU Units_ADU-4(op1) — Date: 4/6/2022
System Name: HVAC System — Floor Area: 683

ENGINEERING CHECKS		SYSTEM LOAD	COIL COOLING PEAK CFM	COIL COOLING PEAK Sensible	COIL COOLING PEAK Latent	COIL HTG. PEAK CFM	COIL HTG. PEAK Sensible
Number of Systems	1						
Heating System							
Output per System	12,000	Total Room Loads	358	7,592	317	171	6,750
Total Output (Btuh)	12,000	Return Vented Lighting		0			
Output (Btuh/sqft)	19.0	Return Air Ducts		100			80
Cooling System		Return Fan		0			0
Output per System	18,000	Ventilation	0	0	0	0	0
Total Output (Btuh)	18,000	Supply Fan		0			0
Total Output (Tons)	1.5	Supply Air Ducts		100			80
Total Output (Btuh/sqft)	28.4						
Total Output (sqft/Ton)	422.0	TOTAL SYSTEM LOAD		7,792	317		6,909
Air System							
CFM per System	800	**HVAC EQUIPMENT SELECTION**					
Airflow (cfm)	800	Carrier 38MGRQ18B3 Mini-Split Heat Pump		14,085	1,917		7,088
Airflow (cfm/sqft)	1.26						
Airflow (cfm/Ton)	533.3						
Outside Air (%)	0.0%	Total Adjusted System Output (Adjusted for Peak Design conditions)		14,085	1,917		7,088
Outside Air (cfm/sqft)	0.00						
Note: values above given at ARI conditions		TIME OF SYSTEM PEAK		Aug 3 PM			Jan 1 AM

HEATING SYSTEM PSYCHROMETRICS (Airstream Temperatures at Time of Heating Peak)

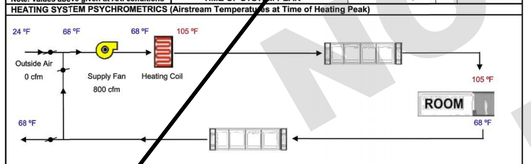

COOLING SYSTEM PSYCHROMETRICS (Airstream Temperatures at Time of Cooling Peak)

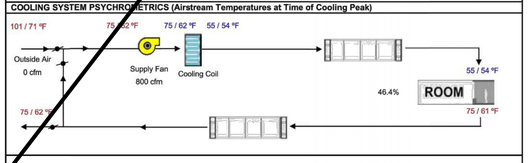

HVAC SYSTEM HEATING AND COOLING LOADS SUMMARY

Project Name: Fresno ADU Units_ADU-5(op1) — Date: 4/6/2022
System Name: HVAC System — Floor Area: 1015

ENGINEERING CHECKS		SYSTEM LOAD	COIL COOLING PEAK CFM	COIL COOLING PEAK Sensible	COIL COOLING PEAK Latent	COIL HTG. PEAK CFM	COIL HTG. PEAK Sensible
Number of Systems	1						
Heating System							
Output per System	24,000	Total Room Loads	566	11,969	509	367	14,413
Total Output (Btuh)	24,000	Return Vented Lighting		0			
Output (Btuh/sqft)	23.6	Return Air Ducts		158			170
Cooling System		Return Fan		0			0
Output per System	24,000	Ventilation	0	0	0	0	0
Total Output (Btuh)	24,000	Supply Fan		0			0
Total Output (Tons)	2.0	Supply Air Ducts		158			170
Total Output (Btuh/sqft)	23.6						
Total Output (sqft/Ton)	507.5	TOTAL SYSTEM LOAD		12,285	509		14,754
Air System							
CFM per System	800	**HVAC EQUIPMENT SELECTION**					
Airflow (cfm)	800	Carrier 38MGRQ24C Mini-Split Heat Pump		19,988	1,383		14,176
Airflow (cfm/sqft)	0.79						
Airflow (cfm/Ton)	400.0						
Outside Air (%)	0.0%	Total Adjusted System Output (Adjusted for Peak Design conditions)		19,988	1,383		14,176
Outside Air (cfm/sqft)	0.00						
Note: values above given at ARI conditions		TIME OF SYSTEM PEAK		Aug 3 PM			Jan 1 AM

HEATING SYSTEM PSYCHROMETRICS (Airstream Temperatures at Time of Heating Peak)

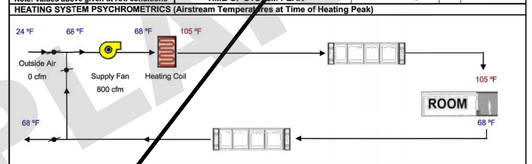

COOLING SYSTEM PSYCHROMETRICS (Airstream Temperatures at Time of Cooling Peak)

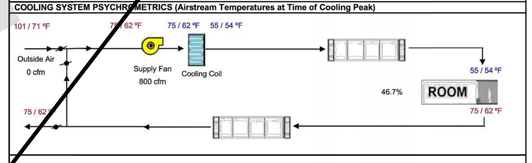

NOT FOR CONSTRUCTION
PLEASE
22-17

T24 PREPARED BY:
www.getTitle24.com
viranchi@getitle24.com
PHONE: (714) 888-4736

TITLE 24 MANDATORY MEASURES
SHEET 2 OF 2

DATE: 4/6/2022

REGISTERED PROFESSIONAL ENGINEER
VISHNU P. ALAM
NO. M 27087
EXP. 06/30/2023
MECHANICAL
STATE OF CALIFORNIA

Fresno ADU Units_ADU-1,2,3,4,5
ADDRESS: 2600 Fresno St.
Fresno, CA 93721

MM-2

MECHANICAL SPECIFICATIONS

PROVIDE EQUIPMENT INDICATED ON THE DRAWINGS, AND AS REQUIRED FOR A COMPLETE FUNCTIONING SYSTEM.

DEFINITIONS: FURNISH MEANS TO SUPPLY AND DELIVER TO PROJECT SITE, READY FOR INSTALLATION. INSTALL MEANS TO PLACE IN POSITION AND MAKE CONNECTIONS FOR SERVICE OR USE. PROVIDE MEANS TO FURNISH AND INSTALL, COMPLETE AND READY FOR INTENDED USE.

WARRANTY: PROVIDE LABOR AND MATERIALS TO REPAIR OR REPLACE DEFECTIVE PARTS AND MATERIALS AS REQUIRED FOR ONE YEAR AFTER SUBSTANTIAL COMPLETION OR OWNER ACCEPTANCE OF THE COMPLETED PROJECT. PROVIDE A SEPARATE LINE ITEM DEDUCT AMOUNT ON THE PROPOSAL FORM TO DELETE WARRANTY SERVICE, AT THE OWNER'S OPTION.

PROVIDE OPERATION MANUALS, MAINTENANCE MANUALS AND SCHEMATICS FOR ALL MECHANICAL EQUIPMENT INSTALLED.

COORDINATION: COORDINATE WITH THE WORK OF OTHER SECTIONS, EQUIPMENT FURNISHED BY OTHERS, REQUIREMENTS OF THE OWNER, AND WITH THE CONSTRAINTS OF THE EXISTING CONDITIONS OF THE PROJECT SITE.

ROOF PENETRATIONS SHALL COMPLY WITH "SMACNA" AND "NRCA" STANDARDS, AND WITH THE REQUIREMENTS OF THE EXISTING ROOFING WARRANTY, IF APPLICABLE. DO NOT PERFORM ROOFING PENETRATIONS IN A MANNER WHICH WOULD VOID OR OTHERWISE LIMIT THE EXISTING ROOF WARRANTY.

DUCT DIMENSIONS: UNLESS OTHERWISE NOTED, DUCT DIMENSIONS ON THE DRAWINGS ARE INSIDE CLEAR DIMENSIONS.

SHEET METAL DUCTWORK: PROVIDE SHEET METAL DUCTWORK FABRICATED AND INSTALLED IN ACCORDANCE WITH ASHRAE AND SMACNA STANDARDS, FOR 1" W.G. PRESSURE CLASS, SEAL CLASS "A". SHEET METAL SHALL BE GALVANIZED SHEET STEEL OF LOCK FORMING QUALITY, WITH G90 ZINC COATING. SHEET STEEL SHALL COMPLY WITH ASTM A653 STANDARD SPECIFICATION FOR STEEL SHEET METAL, ZINC COATED (GALVANIZED) OR ZINC-IRON ALLOY-COATED (GALVANNEALED) BY THE HOT DIP PROCESS, AND A924 STANDARD SPECIFICATION FOR GENERAL REQUIREMENTS FOR SHEET, METALLIC-COATED BY THE HOT DIP PROCESS. ALL ANGLE IRON USED FOR SUPPORT SHALL BE GALVANIZED. CONNECTIONS TO WALLS OR FLOOR SHALL BE AIR TIGHT WITH ANGLE IRON AND CAULKING. SEAL ALL DUCT SEAMS, TRANSVERSE AND LONGITUDINAL, AIR TIGHT. PROVIDE TURNING VANES AT ALL 90º ELBOWS.

TRAPEZE DUCT HANGERS: PROVIDE MINIMUM 1" X 2" X 1" X 18 GAUGE CHANNELS WITH MINIMUM 1" X 18 GAUGE STRAPS TO STRUCTURAL SUPPORT.

ROUND SHEET METAL DUCT: PROVIDE SPIRAL SEAM (ALL SIZES) OR SNAP LOCK (DUCT SIZES UP TO 10") GALVANIZED STEEL COMPLYING WITH SMACNA STANDARDS. SPIRAL SEAM DUCTWORK SHALL HAVE SMACNA SEAM TYPE RL-1.

FIBER GLASS DUCT BOARD IS AN ACCEPTABLE ALTERNATIVE IF APPROVED BY OWNER AND THE LOCAL BUILDING CODE OFFICIAL. PRODUCT AND INSTALLATION MUST MEET NAIMA STANDARDS AND OTHER APPLICABLE CODES AND REGULATIONS.

EXPOSED DUCTWORK: EXPOSED DUCTWORK SHALL BE CLEANED OF DEBRIS AND OIL, THEN WIPED DOWN WITH VINEGAR OR OTHER SURFACE PREPARING CHEMICAL TO PREPARE DUCT FOR PAINT.

DUCT SEALANT: PROVIDE POLYMERIC RUBBER TYPE SEALANT FOR USE ON BOTH INTERIOR LOCATED DUCTWORK AND DUCTWORK EXPOSED TO OUTDOOR CONDITIONS. SEALER SHALL HAVE HIGH BONDING STRENGTH FOR SURE, FIRST TIME SEALING OF JOINTS IN LOW, MEDIUM, AND HIGH PRESSURE DUCT SYSTEMS. SEALER SHALL BE HIGH IN SOLID CONTENT. PROVIDE A TWO PART TAPE SEALING SYSTEM, CONSISTING OF WOVEN FIBER TAPE IMPREGNATED WITH A GYPSUM MINERAL COMPOUND, AND A MODIFIED ACRYLIC/SILICONE ACTIVATOR THAT REACTS EXOTHERMICALLY WITH THE TAPE. TWO PART TAPE SEALING SYSTEM MUST BE RATED FOR BOTH INDOOR AND OUTDOOR APPLICATION. TAPE SHALL NOT CONTAIN ASBESTOS.

DUCT INSULATION: MATERIAL FOR SUPPLY AND RETURN AIR DUCT ABOVE CEILING INSIDE THE BUILDING SHALL HAVE THE EQUIVALENT THERMAL RESISTANCE OF MINIMUM R-6. THE REQUIRED R VALUES ARE FOR INSTALLED INSULATION WITH 25% COMPRESSION AT THE CORNERS. PROVIDE PINS AND WASHERS IN ACCORDANCE WITH SMACNA REQUIREMENTS AND AS REQUIRED TO PREVENT INSULATION FROM SAGGING. PROVIDE ADEQUATE INSULATION AT THE SUPPLY AIR DIFFUSERS TO PREVENT CONDENSATION.

FLEXIBLE DUCT : UL #181 LISTED, CLASS 1, AND CONTAIN A 0.1 PERM RATED POLYETHYLENE INNER LINER, WITH R-8 FIBERGLASS INSULATION. FLEXIBLE DUCTS SHALL BE SECURED TO RIGID SHEET METAL COLLARS AND AIR DIFFUSERS WITH NYLON TIES OR STAINLESS STEEL WORM GEAR STRAPS. SEAL ALL CONNECTIONS AND JOINTS AIRTIGHT. SUPPORT FLEXIBLE DUCTS FROM THE BUILDINGS STRUCTURE WITH MINIMUM 1" WIDE, 18 GAUGE, GALVANIZED STEEL STRAP AT MAXIMUM 4'-0" CENTERS. PROVIDE 4" WIDE SHEET METAL SADDLES AT EACH SUPPORT EACH STRAP. SAG OF FLEXIBLE DUCT BETWEEN HANGERS SHALL NOT EXCEED 1/2" PER FOOT OF SUPPORT SPACING. RADIUS FOR TURNS OF FLEXIBLE DUCTS SHALL BE A MINIMUM OF ONE DUCT DIAMETER. FLEXIBLE DUCT RUNS SHALL NOT EXCEED 10'-0" IN LENGTH AND SHALL BE THE SAME SIZE AS THE DIFFUSER NECK CONNECTION.

ROUND VOLUME DAMPERS: PROVIDE MINIMUM 20 GAUGE GALVANIZED STEEL FRAME AND BLADES, MINIMUM 3/8" SQUARE STEEL AXLE, MOLDED SYNTHETIC BEARINGS, WITH LOCKING POSITION REGULATOR. REGULATOR SHALL BE POSITIONED WITH SHEET METAL BRACKET BEYOND DUCT COVERING. WHERE POSITIONING REGULATOR IS NOT ACCESSIBLE, PROVIDE COUPLING AND EXTENSION ROD WITH REGULATOR FOR CEILING OR WALL INSTALLATION, AS REQUIRED.

RECTANGULAR VOLUME DAMPERS: PROVIDE MINIMUM 16 GAUGE GALVANIZED STEEL CHANNEL FRAME, 16 GAUGE GALVANIZED STEEL BLADES, MINIMUM ½" HEXAGONAL AXLE, BOLDED SYNTHETIC BEARINGS, WITH 3/8" SQUARE PLATED STEEL CONTROL SHAFT. LINKAGES SHALL BE CONCEALED IN THE FRAME. OPERATING SHAFT SHALL EXTEND BEYOND FRAME AND DUCT TO A LOCKING QUADRANT WITH ADJUSTABLE LEVER. MAXIMUM BLADE WIDTH SHALL NOT EXCEED 6".

DUCT TURNING VANES: PROVIDE FABRICATED TURNING VANES AND VANE RUNNERS, CONSTRUCTED IN ACCORDANCE WITH SMACNA "HVAC DUCT CONSTRUCTION STANDARDS". PROVIDE TURNING VANES CONSTRUCTED OF CURVED BLADES, SUPPORTED WITH BARS PERPENDICULAR TO BLADES, AND SET INTO SIDE STRIPS SUITABLE FOR MOUNTING IN DUCTWORK. FOLLOW SMACNA GUIDELINES FOR SPACING SUPPORT, AND CONSTRUCTION. ALL BLADES SHALL BE DOUBLE THICKNESS AIRFOIL TYPE.

FLEXIBLE DUCT CONNECTORS: PROVIDE U.L. LABELED 30 OUNCE NEOPRENE COATED FIBERGLASS FABRIC DUCT CONNECTORS.

DUCT ACCESS DOORS: PROVIDE HINGED ACCESS DOORS IN DUCTWORK WHERE REQUIRED FOR ACCESS TO EQUIPMENT. PROVIDE INSULATED ACCESS DOORS FOR INSULATED DUCTWORK. CONSTRUCT OF SAME OR THICKER GAUGE SHEET METAL AS DUCT IN WHICH IT IS INSTALLED. PROVIDE FLUSH FRAMES FOR UN-INSULATED DUCTS, AND EXTENDED FRAMES FOR EXTERNALLY INSULATED DUCTS. PROVIDE CONTINUOUS HINGE ON ONE SIDE, WITH ONE HANDLE-TYPE LATCH FOR ACCESS DOORS 12" HIGH AND SMALLER, AND TWO HANDLE-TYPE LATCHES FOR LARGER ACCESS DOORS.

HVAC CONTROL SYSTEM: PROVIDE ALL THE NECESSARY CONTROLS AND CONTROL WIRING IN CONDUIT COMPATIBLE TO SYSTEMS SHOWN ON EQUIPMENT SCHEDULE M2.0.

PROGRAMMABLE THERMOSTAT FOR EACH SYSTEM SHALL ENABLE THE SUPPLY FAN AND CYCLE THE COOLING AND HEATING STAGES TO MAINTAIN SPACE SET-POINT. SUPPLY FAN RUNS CONTINUOUSLY DURING THE OCCUPIED MODE.

EACH THERMOSTAT SHALL HAVE A DEAD BAND OF AT LEAST 5 DEGREES (ADJ) WITHIN WHICH THE SUPPLY OF HEATING AND COOLING IS SHUT OFF.

EACH THERMOSTAT SHALL HAVE SETBACK AND SET-UP CAPABILITY DURING THE UNOCCUPIED MODE. FOR SETBACK, THE HEATING SHALL RESTART AND TEMPORARILY OPERATE ACCORDING TO A SET-POINT ADJUSTABLE DOWN TO 55 DEGREES. FOR SET-UP, THE COOLING SHALL RESTART AND TEMPORARILY OPERATE ACCORDING TO A SET-POINT ADJUSTABLE UP TO 85 DEGREES OR TO PREVENT HIGH SPACE HUMIDITY LEVELS.

EACH SYSTEM SHALL BE PROVIDED WITH A MOTORIZED OUTSIDE AIR DAMPER THAT WILL AUTOMATICALLY SHUT WHEN THE SYSTEM OR SPACES SERVED ARE NOT IN USE. VENTILATION OUTSIDE AIR DAMPERS SHALL BE CAPABLE OF AUTOMATICALLY CLOSING DURING PREOCCUPANCY BUILDING WARM-UP, COOL DOWN, AND SETBACK, EXCEPT WHEN VENTILATION REDUCES ENERGY COSTS (e.g., NIGHT PURGE) OR WHEN VENTILATION MUST BE SUPPLIED TO MEET CODE REQUIREMENTS.

COMMISSIONING/VERIFICATION: HVAC CONTROL SYSTEM SHALL BE TESTED TO ENSURE THAT CONTROL ELEMENTS ARE CALIBRATED, ADJUSTED, AND IN PROPER WORKING CONDITION, AND THAT THE SYSTEM MEETS THE DESIGN REQUIREMENTS.

TEST AND BALANCE: CONTRACT DIRECTLY A THIRD PARTY TO PROVIDE TEST AND BALANCE OF THE HVAC SYSTEM. THE GENERAL CONTRACTOR IS RESPONSIBLE FOR SCHEDULING, TEST AND ADJUST ALL MECHANICAL SYSTEM AND EQUIPMENT TO ASSURE PROPER BALANCE AND OPERATION. PERFORM TESTS IN ACCORDANCE WITH NEBB PROCEDURAL STANDARDS-1999 OR AABC 2002, AND ASHRAE STANDARD 111. ELIMINATE NOISE AND VIBRATION, AND ASSURE PROPER FUNCTION OF CONTROLS. SUBMIT COMPLETED TEST AND BALANCE REPORT TO OWNER'S REPRESENTATIVE. BALANCING CONTRACTOR SHALL BE INDEPENDENT AND CERTIFIED WITH NEBB OR AABC. BALANCE ALL SYSTEMS WITHIN 5% OF AIR FLOW INDICATED ON DRAWINGS, AND REPORT ALL DISCREPANCIES TO THE HVAC CONTRACTOR FOR CORRECTION. MARK FINAL BALANCE POSITIONS ON DAMPERS WITH PERMANENT MARKER.

COMPLETION REQUIREMENTS: THE CONTRACTOR SHALL PROVIDE, WITHIN 90 DAYS AFTER THE DATE OF SYSTEM ACCEPTANCE, RECORD DRAWINGS AND AN OPERATING AND MAINTENANCE MANUAL TO THE BUILDING OWNER OR THE DESIGNATED REPRESENTATIVE OF THE OWNER.

THE RECORD DRAWING SHALL BE OF THE ACTUAL INSTALLATION AND INCLUDE AS A MINIMUM THE LOCATION AND PERFORMANCE DATA ON EACH PIECE OF EQUIPMENT, GENERAL CONFIGURATION OF DUCT AND PIPE DISTRIBUTION SYSTEM INCLUDING SIZES, AND THE TERMINAL AIR OR WATER DESIGN FLOW RATES.

THE OPERATING AND MAINTENANCE MANUALS SHALL BE IN ACCORDANCE WITH INDUSTRY-ACCEPTED STANDARDS AND SHALL INCLUDE, AT A MINIMUM, THE FOLLOWING: (A) SUBMITTAL DATA STATING EQUIPMENT SIZE AND SELECTED OPTIONS FOR EACH PIECE OF EQUIPMENT REQUIRING MAINTENANCE; (B) OPERATION MANUALS AND MAINTENANCE MANUALS FOR EACH PIECE OF EQUIPMENT REQUIRING MAINTENANCE. EXCEPT EQUIPMENT NOT FURNISHED AS PART OF THE PROJECT, REQUIRED ROUTINE MAINTENANCE ACTIONS SHALL BE CLEARLY IDENTIFIED; (C) NAMES AND ADDRESSES OF AT LEAST ONE SERVICE AGENCY; (D) HVAC CONTROLS SYSTEMS MAINTENANCE AND CALIBRATION INFORMATION, INCLUDING WIRING DIAGRAMS, SCHEMATICS, AND CONTROL SYSTEM SEQUENCE DESCRIPTIONS. DESIRED OR FIELD-DETERMINED SET-PIONTS SHALL BE PERMANENTLY RECORDED ON CONTROL DRAWINGS AT CONTROL DEVICES OR, FOR DIGITAL CONTROL SYSTEMS, IN PROGRAMMING COMMENTS; (E) A COMPLETE NARRATIVE OF HOW EACH SYSTEM EACH SYSTEM IS INTENDED TO OPERATE, INCLUDING SET-POINTS.

HVAC GENERAL NOTES

1. THE INTENT OF THESE PLANS AND SPECIFICATIONS IS TO INCLUDE ALL LABOR, EQUIPMENT, MATERIALS, AND SERVICES NECESSARY TO FURNISH, INSTALL, TEST, AND ADJUST A COMPLETE WORKABLE HEATING, VENTILATION, AND AIR CONDITIONING SYSTEM AS SHOWN, PRESCRIBED, OR REASONABLY IMPLIED BUT NOT LIMITED TO THAT EXPLICITLY INDICATED IN THE CONTRACT DOCUMENTS, BUT NECESSARY FOR THE PROPER EXECUTION AND COMPLETION OF THE INTENT THEREOF.

2. THE ENTIRE INSTALLATION SHALL CONFORM TO THE APPLICABLE CODES AND REGULATIONS REQUIRED BY AUTHORITIES HAVING JURISDICTION. IN THE EVENT OF CONFLICT BETWEEN SPECIFICATIONS, CODES, AND REGULATIONS, THE MORE RESTRICTIVE SHALL APPLY.

3. DRAWINGS FOR HVAC WORK ARE DIAGRAMATIC SHOWING THE GENERAL LOCATION, TYPE, LAYOUT, AND EQUIPMENT REQUIRED. THE DRAWINGS SHALL NOT BE SCALED FOR EXACT MEASUREMENT, REFER TO ARCHITECTURAL DRAWINGS FOR DIMENSIONS. PROVIDE ALL DUCTWORK, MATERIALS, CONNECTIONS, ACCESSORIES, FITTINGS, OFFSETS, TRANSITIONS, DAMPERS AS REQUIRED FOR A COMPLETE WORKABLE SYSTEM.

4. ALL EQUIPMENT SHALL BE INSTALLED IN STRICT ACCORDANCE WITH THE MANUFACTURER'S RECOMMENDATIONS AND APPROVED LISTING. ALL EQUIPMENT, PIPING AND SUPPORTS SHALL BE RESTRAINED IN ACCORDANCE WITH THE LATEST EDITION OF THE "GUIDLINES FOR SEISMIC RESTRAINTS OF MECHANICAL SYSTEMS AND PLUMBING PIPING SYSTEMS" BY THE SHEET METAL AND AIR CONDITIONING CONTRACTORS NATIONAL ASSOCIATION (SMACNA). ALL EQUIPMENT SHALL BE ANCHORED TO RESIST THE LATERAL FORCE REQUIREMENTS OF CHAPTER 16 OF THE 2012 INTERNATIONAL BUILDING CODE.

5. COORDINATE THE INSTALLATION OF THE HVAC SYSTEM WITH ALL OTHER TRADES PRIOR TO FABRICATION OR INSTALLATION. COORDINATE THE LOCATIONS OF PENETRATIONS AND FINAL LOCATION OF ALL EQUIPMENT WITH THE GENERAL CONTRACTOR. PROVIDE EQUIPMENT WEIGHTS, EQUIPMENT DIMENSIONS, PLATFORM SIZES & LOCATIONS, CURB SIZES & LOCATIONS, CONCRETE PAD SIZES AND LOCATIONS AST REQUIRED. COORDINATE LOCATIONS OF GAS & CONDENSATE LINES WITH PLUMBING CONTRACTOR. COORDINTAE LOCATIONS OF POWER, DISCONNECTS, AND CONTROL CONDUIT WITH THE ELECTICAL CONTRACTOR. COORDINATE LOCATIONS OF ALL DIFFUSERS, REGISTERS, AND GRILLES WITH ARCHITECTURAL PLANS, ELECTRICAL LIGHTING PLANS AND ARCHITECTURAL ELEVATIONS.

6. DETAILS FOR EQUIPMENT PADS, PLATFORMS, AND FLASHINGS SHALL BE AS INDICATED BY THE ARCHITECTURAL/STRUCTURAL/CIVIL DRAWINGS, UNLESS NOTED OTHERWISE.

7. ALL EQUIPMENT, DUCTS, PIPING, SUPPORTS, AND OTHER DEVICES OUTSIDE OF THE BUILDING OR EXPOSED TO WEATHER, SHALL BE COMPLETELY WEATHER-PROOFED.

8. OUTSIDE AIR INTAKES SHALL BE AT LEAST 10 FT. AWAY OR 3 FT. BELOW ANY VENT OR EXHAUST DISCHARGE.

9. ALL DUCT SIZES ARE CLEAR INSIDE DIMENSIONS. DUCTWORK SHALL BE CONSTRUCTED, ERECTED, INSULATED AND TESTED IN ACCORDANCE CHAPTER 6 OF THE 2012 INTERNATIONAL MECHANICAL CODE.

10. ALL EXHAUST FANS SHALL BE EQUIPED WITH A BACK DRAFT DAMPER.

11. DUCT AND AIR TRANSFER PENETRATIONS THRU BUILDING ASSEMBLIES REQUIRING PROTECTION SHALL BE PROTECTED WITH FIRE DAMPERS, SMOKE DAMPERS, COMBINATION SMOKE/FIRE DAMPERS AND CEILING RADIATION DAMPERS IN ACCORDANCE WITH SECTION 607 OF THE INTERNATIONAL MECHANICIAL CODE. DUCTS NOT REQUIRING DAMPERS SHALL COMPLY WITH SECTION 714 & 717 OF THE 2019 CALIFORNIA BUILDING CODE.

12. INSTALL SMOKED DETECTORS AND PROVIDE FOR SMOKE DETECTION AND AUTOMATIC SHUT-OFF OF ALL AIR HANDLING EQUIPMENT IN ACCORDANCE WITH SECTION 606 OF THE 2019 CALIFORNIA MECHANICAL CODE.

13. UNLESS NOTED OTHERWISE, ALL LINE VOLTAGE WIRING, CONDUIT, FINAL CONNECTIONS, DISCONNECTS, STARTERS, AND OVER CURRENT PROTECTION DEVICES SHALL BE FURNISHED AND INSTALLED BY THE ELECTRICAL CONTRACTOR AS INDICATED ON THESE MECHANICAL DRAWINGS AND/OR ELECTRICAL DRAWINGS AND/OR ELECTRICAL SECTION OF THE SPECIFICATIONS.

14. INSTALL ALL LOW VOLTAGE HVAC CONTROL WIRE AND DEVICES PER PLAN. ALL WIRE SHALL BE IN CONDUIT PROVIDED AND INSTALLED BY THE ELECTICAL CONTRACTOR UNLESS NOTEDED OTHERWISE.

15. PROVIDE OWNER WITH THREE COPIES OF A CERTIFIED AIR BALANCE REPORT PREPARED IN BY A THIRD PARTY CERTIFIED BY THE AABC OR NEBB. TEST, ADJUST AND BALANCE THE HVAC SYSTEM IN ACCORDANCE WITH AABC OR NEBB PROCEDURES. PROVIDE START-UP/TEST REPORTS FOR ALL AIR HANDLING EQUIPMENT, FANS, AND REFRIGERATION EQUIPMENT. TEST AND VERIFY PROPER OPERATION OF ALL MAKE-UP AIR/EXHAUST AIR INTERLOCK SYSTEMS AND THIER SEQUENCES OF OPERATION. BALANCE ALL AIR FLOWS WITHIN 5% OF DESIGN VALUES. PERMANENTLY MARK BALANCE POSITION OF ALL REGULATING DEVICES.

16. PROVIDE OWNER WITH THREE SETS OF AS-BUILT PLANS AND OPERATIONS AND MAINTENANCE MANUALS. CLEARLY IDENTIFY ALL EQUIPMENT WITH PERMANENT PLASTIC OR METAL LABELS/TAGS (PEN MARKING NOT ACCEPTABLE).

17. PROVIDE ONE YEAR WARRANTY ON ALL LABOR, PARTS AND MATERIALS.

18. ANY CHANGE OR DEVIATION FROM THESE PLANS OR SPECIFICATIONS SHALL REQUIRE THE WRITTEN APPROVAL OF THE ENGINEER PRIOR TO COMMENCEMENT OF SUCH WORK.

19.0

a) DUCTS FOR DEMAND CONTROLLED VENTILATION SYSTEMS SHALL BE INSTALLED IN ACCORDANCE WITH THE FAN MANUFACTURER'S INSTALLATION INSTRUCTIONS, THE PROVISIONS ASHRAE 62.2, TABLE 5.3, OR THE AIRFLOW SHALL BE MEASURED AS REQUIRED BY AND IN COMPLIANCE WITH ASHRAE 62.2, 5.4.

b) DUCTS FOR KITCHEN COOKTOPS OR RANGES SHALL BE SHOWN OF METAL WITH A SMOOTH INTERIOR. [CMC 504.3].

1) IDENTIFY THE DETAILED REQUIREMENTS OF CMC DRYER DUCTS. SPECIFY--

a) DUCTS FOR DOMESTIC CLOTHES DRYERS SHALL BE INSTALLED IN ACCORDANCE WITH CMC 504.0.

b) DUCTS FOR DOMESTIC CLOTHES DRYERS SHALL BE RIGID METALLIC DUCTS WITH A MINIMUM MILL THICKNESS OF 16 (0.016-INCH), SHALL HAVE A MINIMUM 4-INCH DIAMETER AND A SMOOTH INTERIOR. THE COMBINED HORIZONTAL AND VERTICAL LENGTH OF THE DUCTS OF THE DUCTS SHALL BE 14-FEET, WHICH SHALL BE REDUCED BY 2-FEET FOR EVERY 90-DEGREE ELBOW IN EXCESS OF TWO ELBOWS.

c) LISTED CLOTHES DRYER TRANSITION DUCTS NOT MORE THAN 6-FEET IN LENGTH SHALL BE PERMITTED TO CONNECT THE DRYER TO THE EXHAUST DUCTS AS LONG AS THEY ARE NOT CONCEALED WITHIN CONSTRUCTION, AND THEY ARE INSTALLED IN ACCORDANCE WITH THE MANUFACTURER'S INSTALLATION INSTRUCTIONS.

LEGEND

AxB		DUCT WORK (WIDTHxDEPTH)
AxB		LINED DUCT WORK (WIDTHxDEPTH DIMENSIONS ARE FOR I.D.)
		SUPPLY DUCT, SECTION
		RETURN DUCT, SECTION
		EXHAUST DUCT, SECTION
R. OR D.		RISE OR DROP IN DIRECTION OF AIR FLOW
	FLEX. CONN.	FLEXIBLE CONNECTION
		DUCT TRANSITION, ROUND AND RECTANGULAR
		SPLITTER DAMPER
		EXTRACTOR AT BRANCH DUCT
		TURNING VANES
		FLEXIBLE DUCT
		SINGLE LINE DUCT WORK
	AVD	AUTOMATIC VOLUME DAMPER
	MVD	MANUAL VOLUME DAMPER
	BDD	BACKDRAFT DAMPER
	MD	MODULATING DAMPER
	AFD	AUTOMATIC FIRE DAMPER
	AD	ACCESS DOOR
	SD	SUPPLY DIFFUSER
	RD	RETURN DIFFUSER
	ER	EXHAUST REGISTER
	SWR	SIDE WALL SUPPLY REGISTER
	SWE	SIDE WALL RETURN OR EXHAUST
	LD	LINEAR DIFFUSER
D.L.	DL	DOOR LOUVER
U.C.	UC	UNDER CUT DOOR
	VAV	VARIABLE AIR VOLUME
T		THERMOSTAT
S		DUCT SMOKE DECTECTOR

SPECIAL NOTICE TO CONTRACTORS

1. ALL CONTRACTORS (GENERAL CONTRACTOR AND SUB-CONTRACTORS) BIDDING THIS PROJECT ARE REQUIRED TO VISIT THE JOB SITE AND VERIFY THE EXISTING CONDITIONS PRIOR TO SUBMITTING THEIR BID. CONTRACTORS ARE TO CAREFULLY REVIEW ALL CONSTRUCTION DOCUMENTS AND NOTE ANY DISCREPANCIES BETWEEN THE CONSTRUCTION DOCUMENTS AND THE CONDITIONS OBSERVED AT THE JOB SITE PRIOR TO SUBMISSION OF ANY BID. THE BUILDING OWNER REPRESNENTATIVE LISTED BELOW MAY BE CONTACTED FOR ACCESS TO THE JOB SITE.

2. CONTRACTORS ARE RESPONSIBLE FOR VERIFYING THE LOCATION AND CONDITION OF ALL POINTS OF CONNECTION, LOCATION AND CONDITION OF ALL BUILDING (ROOF/FLOOR/CEILING) PENETRATIONS, LOCATION AND CONDITION OF ALL UTILITIES AND BUILDING SYSTEMS INCLUDING, BUT NOT LIMITED TO, GAS, WATER, SEWER, VENT, ELECTRICAL, BUILDING MECHANICAL SYSTEMS, DUCT CONNECTIONS, EXHAUST/OUTSIDE AIR CONNECTIONS, SECURITY, FIRE ALARM, DATA, AND PHONE PRIOR TO SUBMISSION OF THEIR BID.

3. ANY DISCREPANCIES BETWEEN THE CONSTRUCTION DOCUMENTS AND THE CONDITIONS OBSERVED SHALL BE BROUGHT TO THE ATTENTION, IN WRITING, TO THE ARCHITECT AND/OR ENGINEER PRIOR TO PROCEEDING WITH CONSTRUCTION.

4. NO WORK SHALL BE DONE ON ANY PART OF THE BUILDING BEYOND THE POINT INDICATED IN EACH SUCCESSIVE INSPECTION WITHOUT FIRST OBTAINING THE WRITTEN APPROVAL OF THE CODE OFFICIAL. NO CONSTRUCTION SHALL BE CONCEALED WITHOUT BEING INSPECTED AND APPROVED.

CITY REVIEW SET
NOT FOR CONSTRUCTION
PLAN-003

InnoDez

Address: Foxbrough pl
Pleasanton, CA. 94566
Phone: (424) 414-0997
Web site: www.innodez.com
Email: hello@innodez.com

CLIENT:

ADDRESS:
CITY OF FRESNO CALIFORNIA

CONFIDENTIALITY STATEMENT:

ALL DRAWINGS AND WRITTEN MATERIALS APPEARING HEREIN CONSTITUTE THE ORIGINAL AND UNPUBLISHED WORK OF THE DESIGNER AND THE SAME MAY NOT BE DUPLICATED, USED OR DISCLOSED WITHOUT CONSENT OF THE DESIGNER.

NOTES:

1. ALL DIMENSIONS HEREIN ARE IN IMPERIAL UNITS UNLESS STATED OTHERWISE.
2. THESE DRAWINGS ARE TO BE READ IN CONJUNCTION WITH ALL RELEVANT DESIGNER, ENGINEER OR SPECIALIST DRAWINGS AND SPECIFICATIONS.
3. THE CONTRACTOR MUST CHECK ALL DIMENSION AT SITE BEFORE COMMENCING WORK.
4. THE CONTRACTOR IS RESPONSIBLE FOR PROVIDING ALL NECESSARY TEMPORARY SUPPORT TO THE BUILDING AND ANY ADJACENT STRUCTURES.

REGISTERED PROFESSIONAL ENGINEER
SYED P. ALAM
NO. M 27087
EXP. 06/30/2023
MECHANICAL
STATE OF CALIFORNIA

REV. NO.	DESCRIPTION	DATE	BY
02	FOR APPROVAL	06.22	MN
01	FOR APPROVAL	03.22	MN
00	FOR APPROVAL	12.21	MN

PROJECT:
ADU PROGRAM

TITLE:
MECHANICAL SPECS, LEGENDS & SYMBOLS

PROJ. NO.	PROJ. ENGR.	SCALE @ 24X36
2104		NTS

DRAWING NO.	REV.
M-0.00	2

SCHEDULE No. 1

HEAT PUMP - OUTDOOR UNIT

TAG	OU-03
SERVING	ADU-03
MANUFACTURER	CARRIER
OUTDOOR MODEL	38MGRQ18B--3
SEER	22.5
EER	12.5
MOTOR VOLT / PH / HZ	208/230 / 1 / 60
MINIMUM CIRCUIT AMPACITY	18 A
MAX OVERCURRENT DEVICE	25 A
COOLING / HEATING CAPACITY (BTU/H)	18,000 / 19,000
DIMENSION (W x H x D) INCHES	37 x 28 x 14.5

SCHEDULE No. 2

INDOOR HORIZONTAL FAN COIL UNIT

TAG	IU-03
LOCATION	CEILING LEVEL
MANUFACTURER	CARRIER
MODEL	40MBDQ12-003
MOTOR VOLT / PH / HZ	208 / 1 / 60
MINIMUM CIRCUIT AMPACITY	1.2 A
AIR FLOW (CFM) - MEDIUM SPEED	397.0
EXTERNAL STATIC PRESSURE (INCHES OF WATER)	0.40
TYPE	HORIZONTAL
RATED COOLING CAPACITY (BTU/H)	12,000
RATED HEATING CAPACITY (BTU/H)	12,000
DIMENSION (W x H x D) INCHES	28 x 8 x 20
WEIGHT (Lbs)	44.0

SCHEDULE No. 3

EXHAUST FAN SCHEDULE

TAG	ERV-01	KH-01
LOCATION	TOILET	KITCHEN
DESIGN SUPPLY VOLUME (CFM)	100	100
SELECT SUPPLY VOLUME (CFM)	100	100
DESIGN PRESSURE DROP (INCH W.C.)	0.100	0.250
SELECTED PRESSURE DROP (INCH W.C.)	0.100	0.250
ELECTRICAL (V / PH / HZ)	120 / 1 / 60	120 / 1 / 60
POWER (W)	81	15.4
RECOVERY EFFICIENCY / RPM	60%	1182
FAN TYPE	CEILING MOUNT	CEILING MOUNT
DRIVE TYPE	DIRECT DRIVE	DIRECT DRIVE
MANUFACTURER	PANASONIC - INTELLI-BALANCE	PANASONIC
MODEL	FV-10VE2	FV-0511KV2
SOUND RATING	1.0 SONE	
MINIMUM SUPPLY VOLUME (CFM)	53	

1. PROVIDE UL LISTING.
2. PROVIDE ENERGY STAR COMPLIANCE.
3. INTERLOCK WITH WALL SWITCH.
4. PROVIDE MOTOR WITH THERMAL OVERLOADS.
5. FOR THE ERV: PROVIDE A READILY ACCESSIBLE OVERRIDE CONTROL (SWITCH). The override control for the whole-building ventilation shall be properly labeled: "Whole House Ventilation Fan. This fan to remain ON at all times the house is occupied."

Energy Standards (Ventilation for Indoor Air Quality)
1: We are having a Continuous Operation of the Whole Building Ventilation System

Total Required Ventilation Rate [ASHRAE 62.2:4.1.1] is calculated per Equation 150.0-B
Equation 150.0-B= 0.03 * Floor area + 7.5 (Nbr+1)
where

Qtot = total required ventilation rate, cfm
Afloor = dwelling-unit floor area, ft2
Nbr = number of bedrooms (not to be less than 1)

Per the above Equation, below are the calculations for each of the ADUs.

For ADU 3: 0.03 * 633 + 7.5 (2+1) = ~ 42 CFM

PROVIDE A PERMANENT ELECTRIC OUTLET AND LIGHT FIXTURE CONTROLLED BY A SWITCH LOCATED AT THE ATTIC ACCESS LOCATION

SCHEDULE No. 4

GRILLES, REGISTERS AND DIFFUSERS SCHEDULE

TYPE	SERVICE	MFR AND MODEL NO	VOLUME DAMPER	FINISH	FRAME AND BORDER TYPE	MATERIAL	DESCRIPTION
ER	EXHAUST REGISTER	TITUS 350RS	OPPOSED BLADE DAMPER	WHITE ENAMEL	NOTE 1	STEEL	35° FIXED DEFLECTION REGISTER WITH BLADES PARALLEL TO SHORT DIMENSION 3/4" SPACING
R	RETURN GRILLE	TITUS 350R	---	WHITE ENAMEL	NOTE 1	STEEL	35° FIXED DEFLECTION GRILLE WITH BLADES IN HORIZONTAL POSITION 3/4" SPACING
SG	SUPPLY GRILLE	TITUS 300RS	---	WHITE ENAMEL	NOTE 1	STEEL	DOUBLE DEFLECTION GRILLE WITH FRONT BLADES PARALLEL TO SHORT DIMENSION 3/4" SPACING
TG	TRANSFER GRILLE	TITUS 350R	---	WHITE ENAMEL	NOTE 1	STEEL	35° FIXED DEFLECTION GRILLE WITH BLADES IN HORIZONTAL POSITION 3/4" SPACING

NOTE:
1. CONTRACTOR TO VERIFY CEILING TYPE AND PROVIDE PROPER FRAME AND BORDER TYPE. TITUS RAPID MOUNT FRAME FOR GYP. BRD. APPLICATIONS.

SUPPLY GRILLE SIZE SCHEDULE - SG

CFM RANGE	FACE SIZE	DUCT SIZE
0 - 125	8"x8"	6"x6"
126 - 225	10"x10"	8"x8"
226 - 330	14"x8"	12"x6"
331 - 440	14"x10"	12"x8"
441 - 580	14"x12"	12"x10"

FACE SIZE TO BE SIZE SHOWN UNLESS OTHERWISE NOTED

DUCT SIZE TO BE SIZE SHOWN OR EQUIVALENT UNLESS OTHERWISE NOTED

LOUVER SCHEDULE

TAG	TYPE	CFM	PR. DROP W.G.	MANUFACTURER MODEL
L-1	INTAKE AIR	50	0.03	RUSKIN ELF6375DX

RETURN GRILLE SIZE SCHEDULE - R
TRANSFER GRILLE SIZE SCHEDULE - TG

CFM RANGE	FACE SIZE	DUCT SIZE
0 - 150	10"x8"	8"x6"
151 - 275	10"x10"	8"x8"
276 - 600	14"x12"	12"x10"
601 - 1100	24"x12"	14"x14"
1101 - 1750	24"x18"	16"x16"
1751 - 2000	24"x24"	18"x16"

FACE SIZE TO BE SIZE SHOWN UNLESS OTHERWISE NOTED

DUCT SIZE TO BE SIZE SHOWN OR EQUIVALENT UNLESS OTHERWISE NOTED

FLEX DUCT WILL NOT BE ALLOWED ON RETURN GRILLE CONNECTIONS

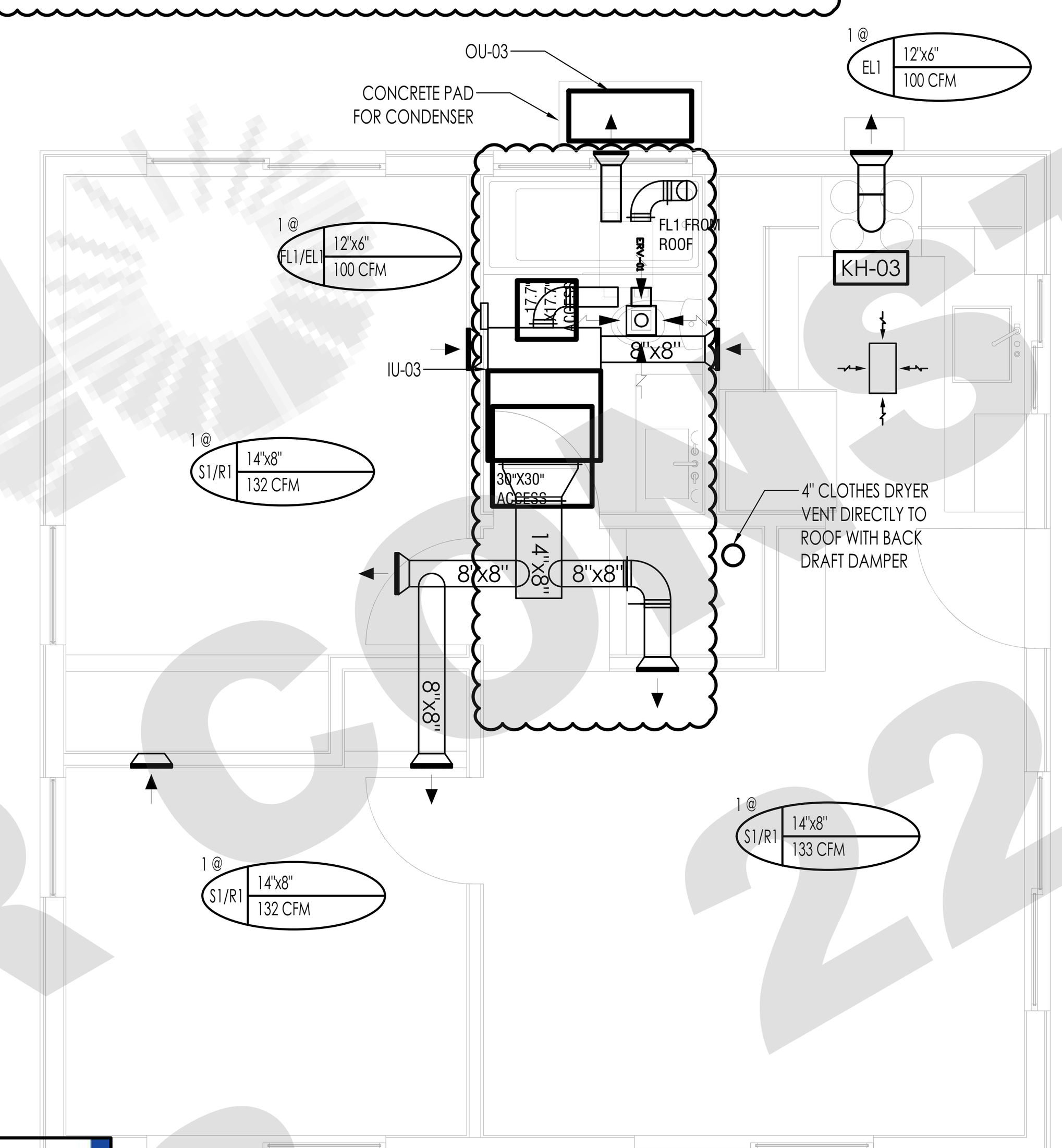

UNIT 03

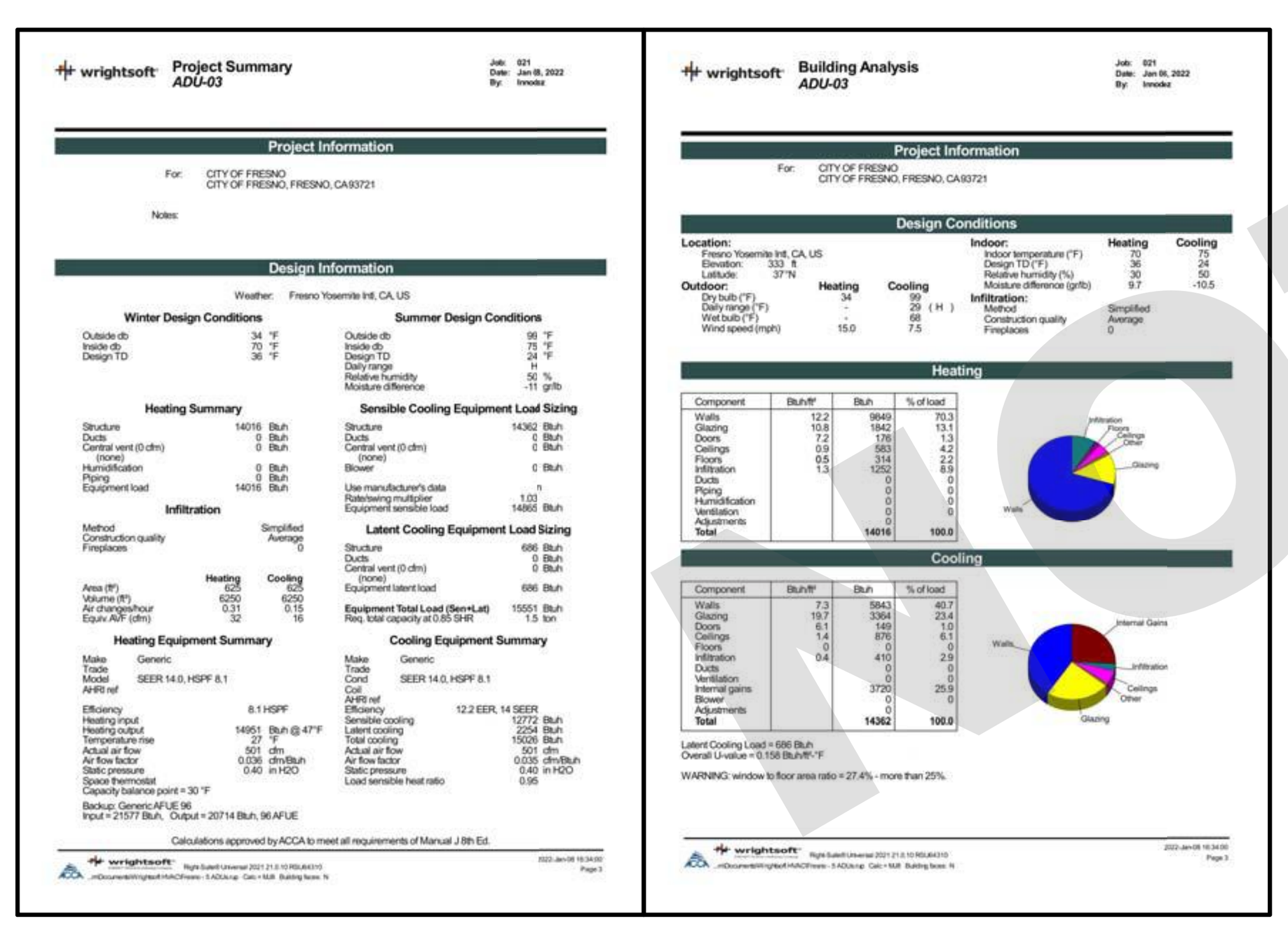

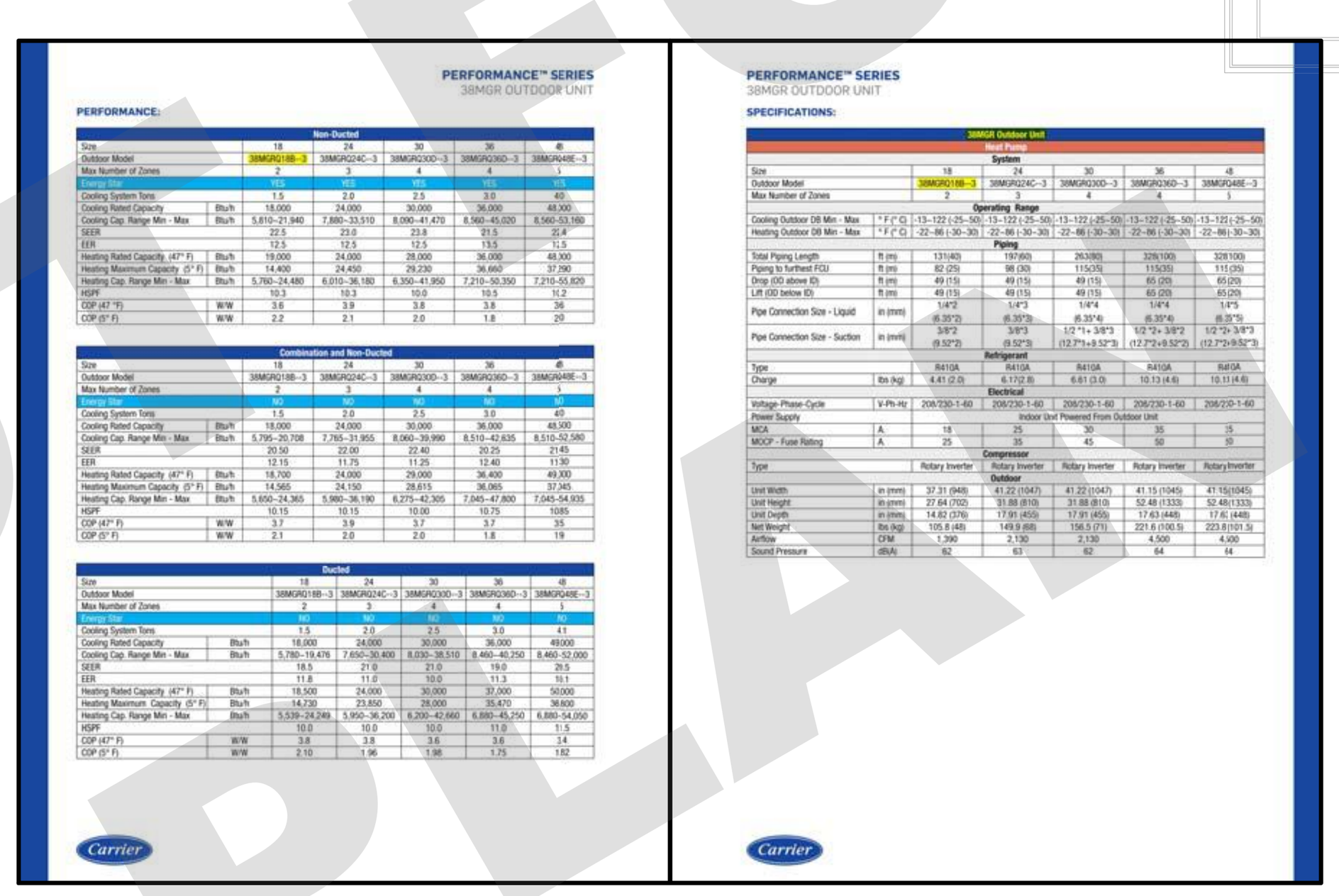

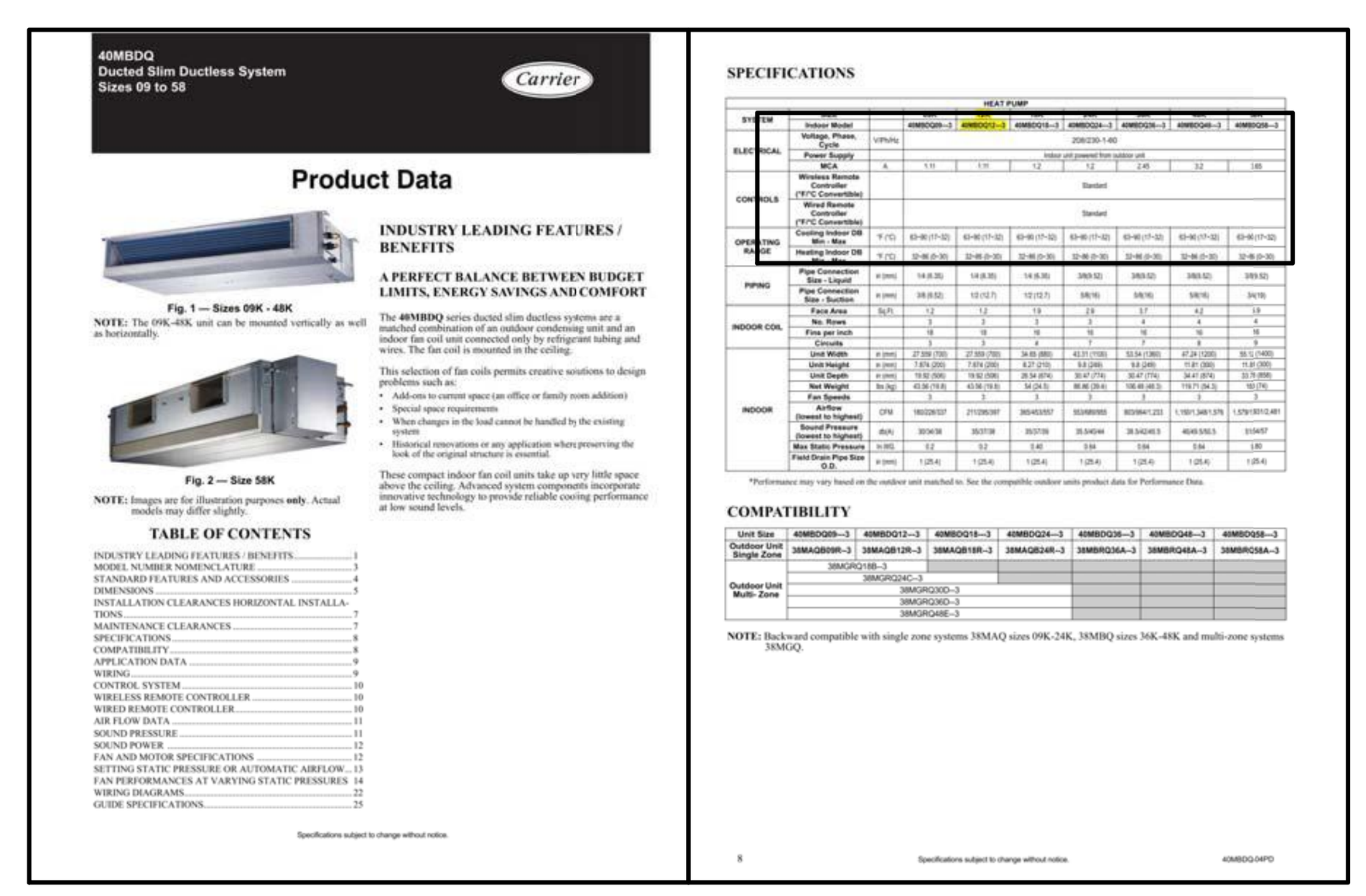

1- AFTER INSTALLING WATER HEATING SYSTEMS, FENESTRATION AND HVAC EQUIPMENT, THE INSTALLER SHALL SUBMIT THE INSTALLATION CERTIFICATE (CF-2R FORM), COMPLETED AND SIGNED BY THE INSTALLER, LISTING THE EQUIPMENT INSTALLED, (MANUFACTURER, MODEL, AND EFFICIENCIES, U-VALUES AND SHGC-VALUES, ETC.) AND THAT IT MEETS OR EXCEEDS THE REQUIREMENTS OF THE ENERGY DOCUMENTATION (CEES SECTION 10-103(a)(3)).
2- UPON INSTALLATION, SPECIAL INSPECTION FOR FIELD VERIFICATION AND DIAGNOSTIC TESTING PERFORMED BY A THIRD PARTY CERTIFIED HERS RATER SHALL BE PROVIDED.
3- AIR CONDITIONING EQUIPMENT DESIGNED TO BE IN A FIXED POSITION SHALL BE SECURELY FASTENED, PER MANUFACTURER'S INSTALLATION INSTRUCTIONS. INSTALLATION INSTRUCTIONS SHALL BE PROVIDED TO THE FIELD INSPECTOR (CMC SECTION 903.4)
4- CMC SECTION 304.1: NOT LESS THAN 30" IN DEPTH, WIDTH AND HEIGHT OF WORKING SPACE SHALL BE PROVIDED IN FRONT OF ATTIC MOUNTED MECHANICAL EQUIPMENT.
5- MECHANICAL SYSTEM INCLUDING HEATING AND AIR CONDITIONING SYSTEMS THAT SUPPLY AIR TO HABITABLE SPACES SHALL HAVE MERV 13 FILTERS OR BETTER. (CEC 150.0(m)(12)(c)
6- UNLESS OTHERWISE PERMITTED OR REQUIRED BY THE DRYER MANUFACTURER'S INSTRUCTIONS AND APPROVED BY THE AUTHORITY HAVING JURISDICTION, DOMESTIC DRYER MOISTURE EXHAUST DUCTS SHALL NOT EXCEED A TOTAL COMBINED HORIZONTAL AND VERTICAL LENGTH OF 14 FEET, INCLUDING TWO 90 DEGREE ELBOWS. A LENGTH OF 2 FEET SHALL BE DEDUCTED FOR EACH 90 DEGREE ELBOW IN EXCESS OF TWO. (CMC504.4.2.1

Provide Special Inspection for Field Verification and Diagnostic Testing performed by a third party certified HERS Rater for the following:
a) Quality insulation installation
b) Indoor air quality ventilation
c) Kitchen range hood
d) Minimum air flow
e) Verified EER
f) Verified SEER
g) Verified refrigerant charge
h) Fan efficacy watts / CFM
i) Verified HSPF
j) Verified heat pump rated heating capacity
k) Duct leakage testing
l) Ducts located entirely in conditioned space confirmed by duct leakage testing

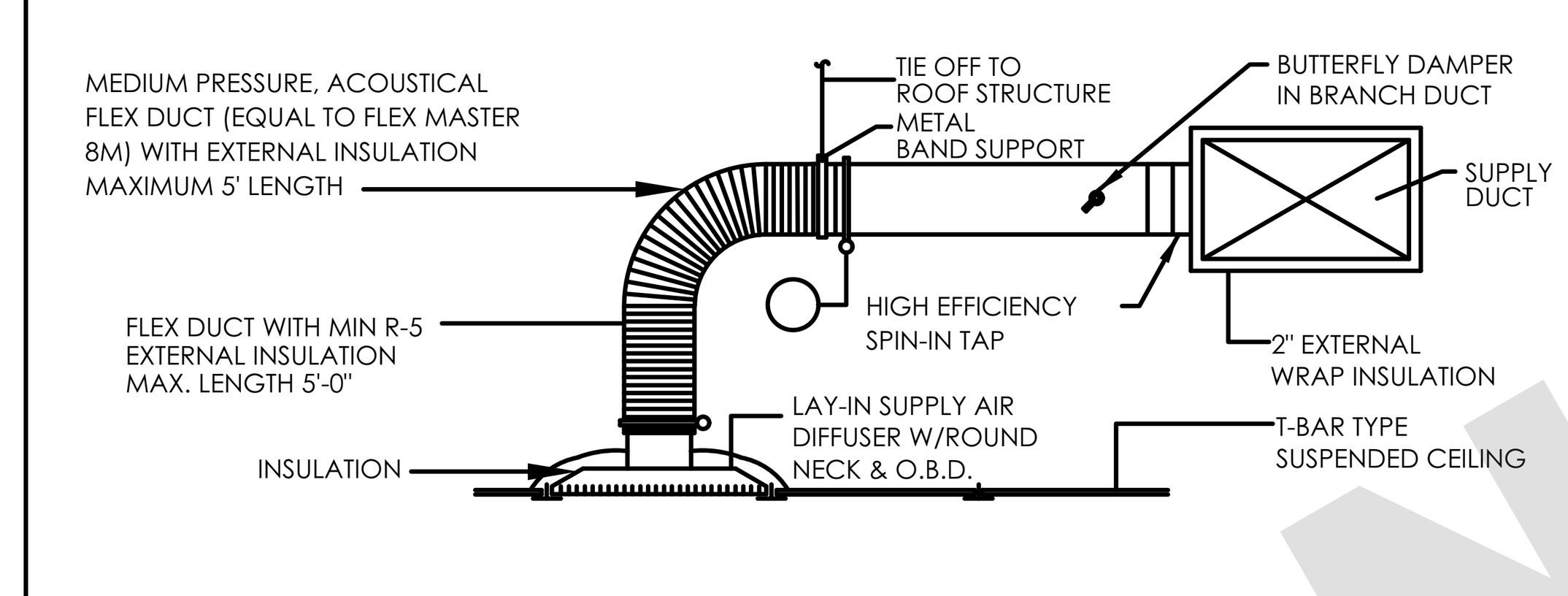

SUPPLY AIR DIFFUSER CONNECTION

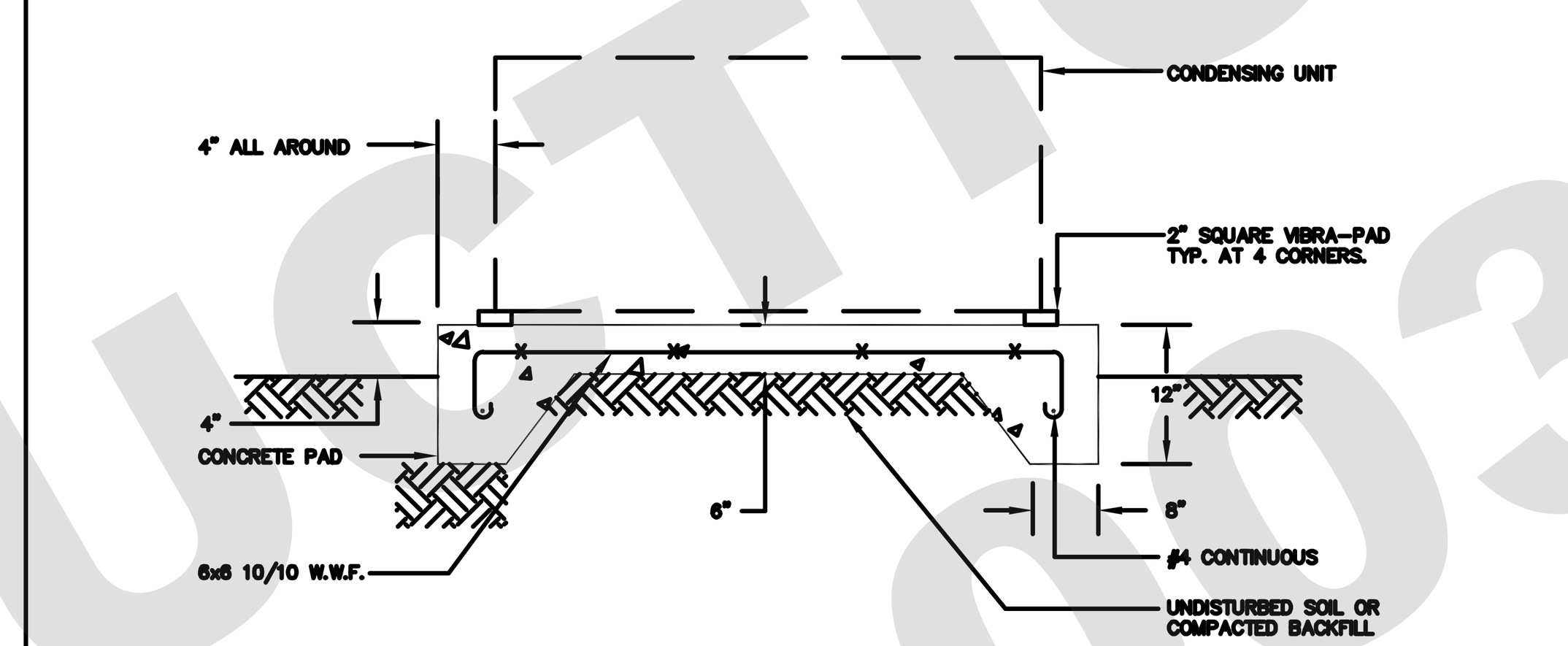

DX/CONDENSING UNIT MOUNTING DETAIL

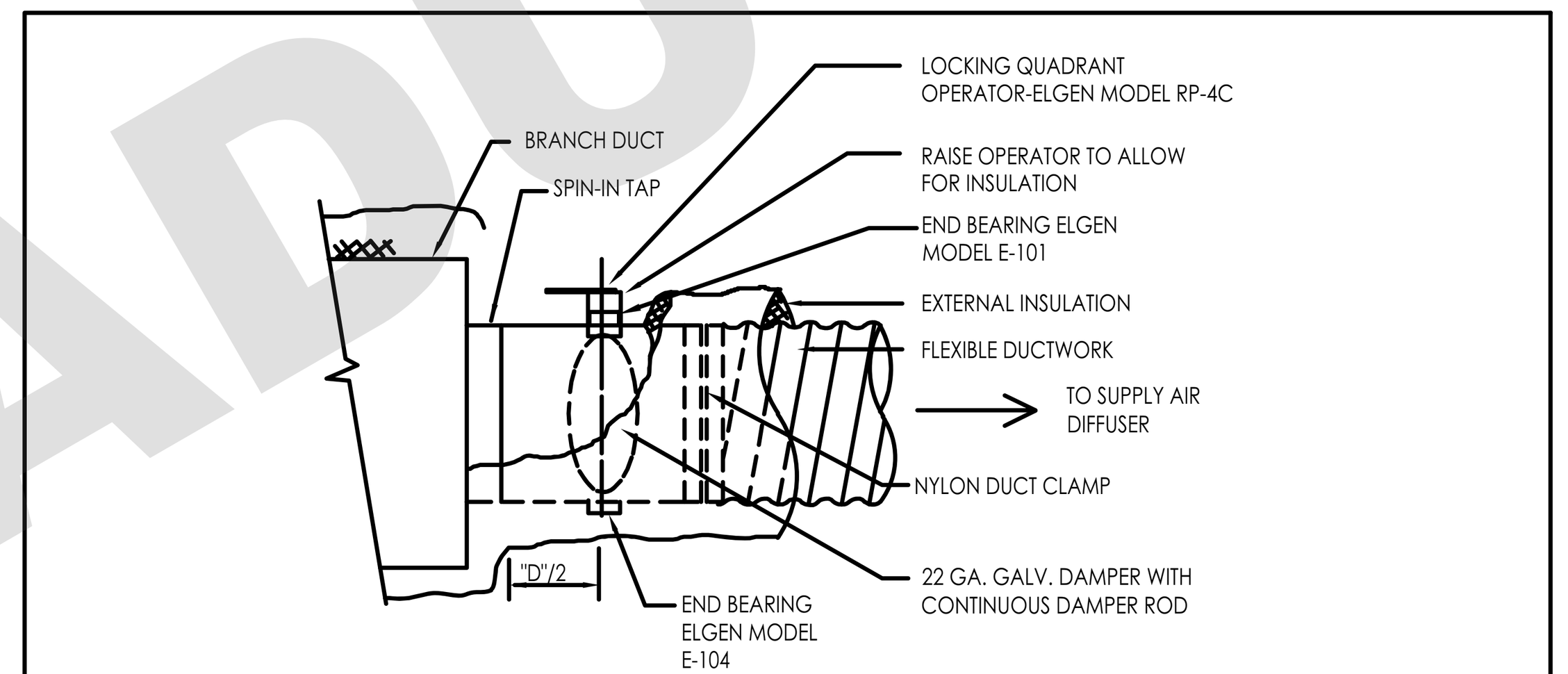

FLEXIBLE DUCT TAP

DUCTWORK SYMBOLS LEGEND

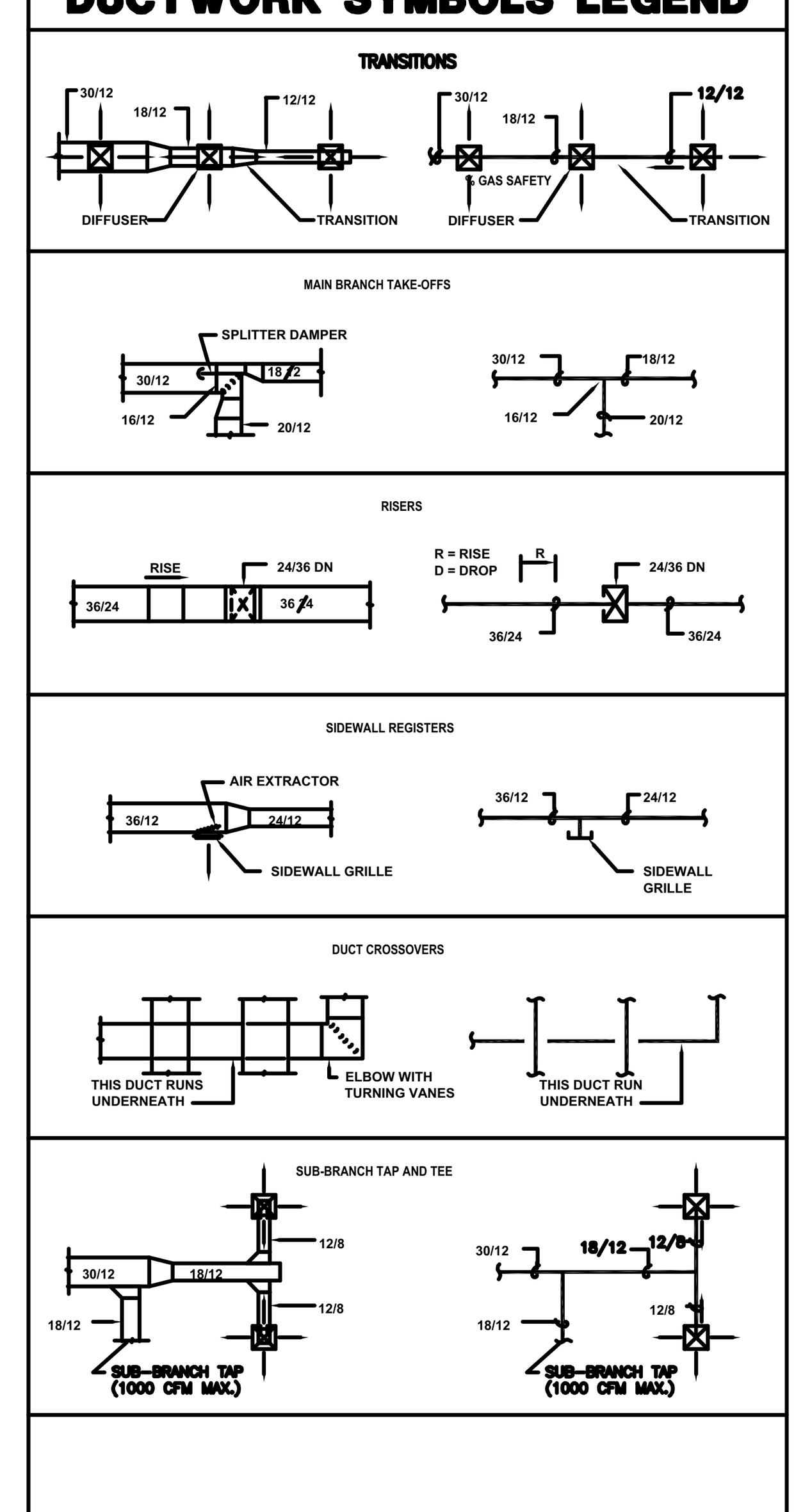

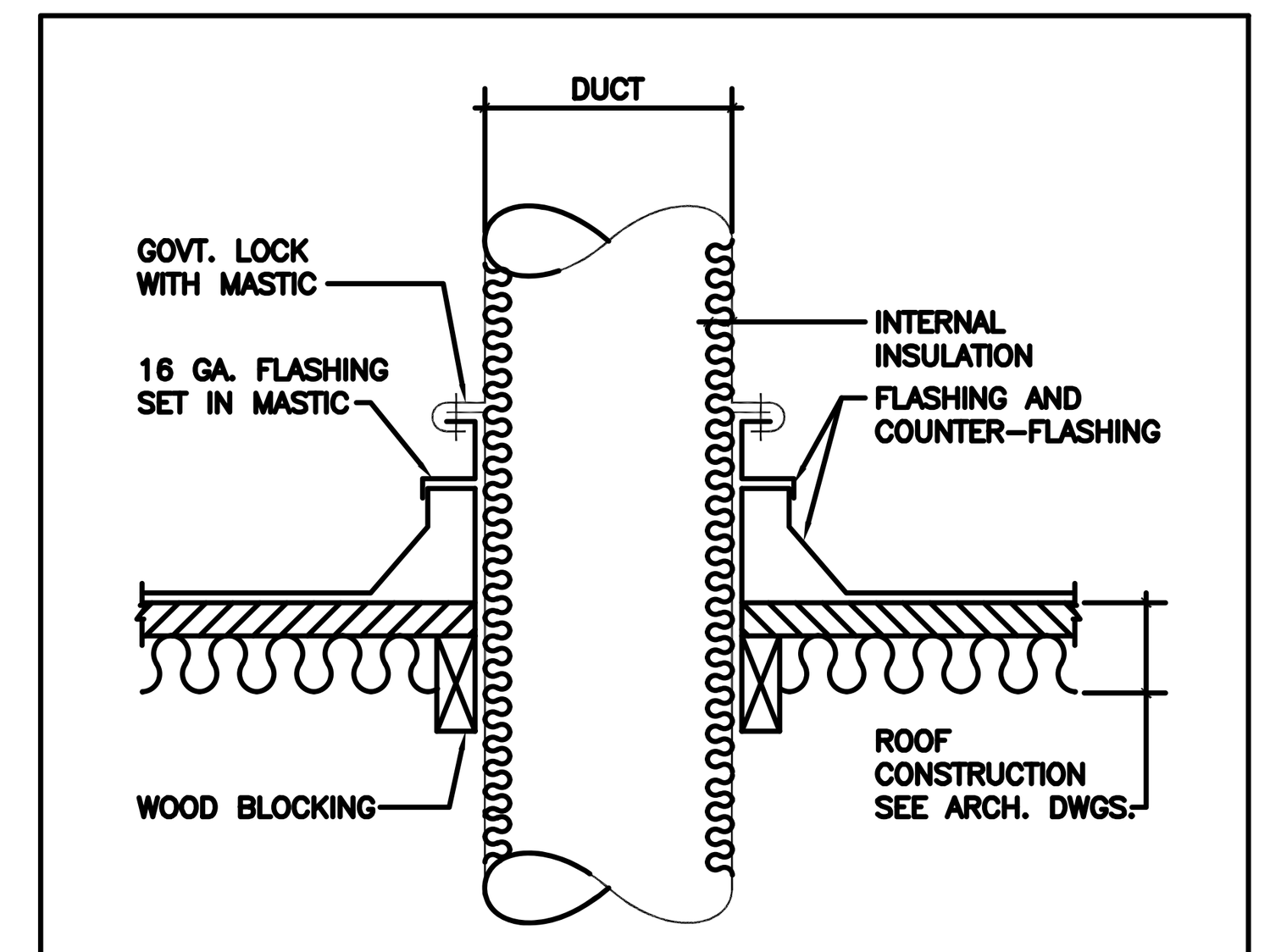

DUCT ROOF PENETRATION

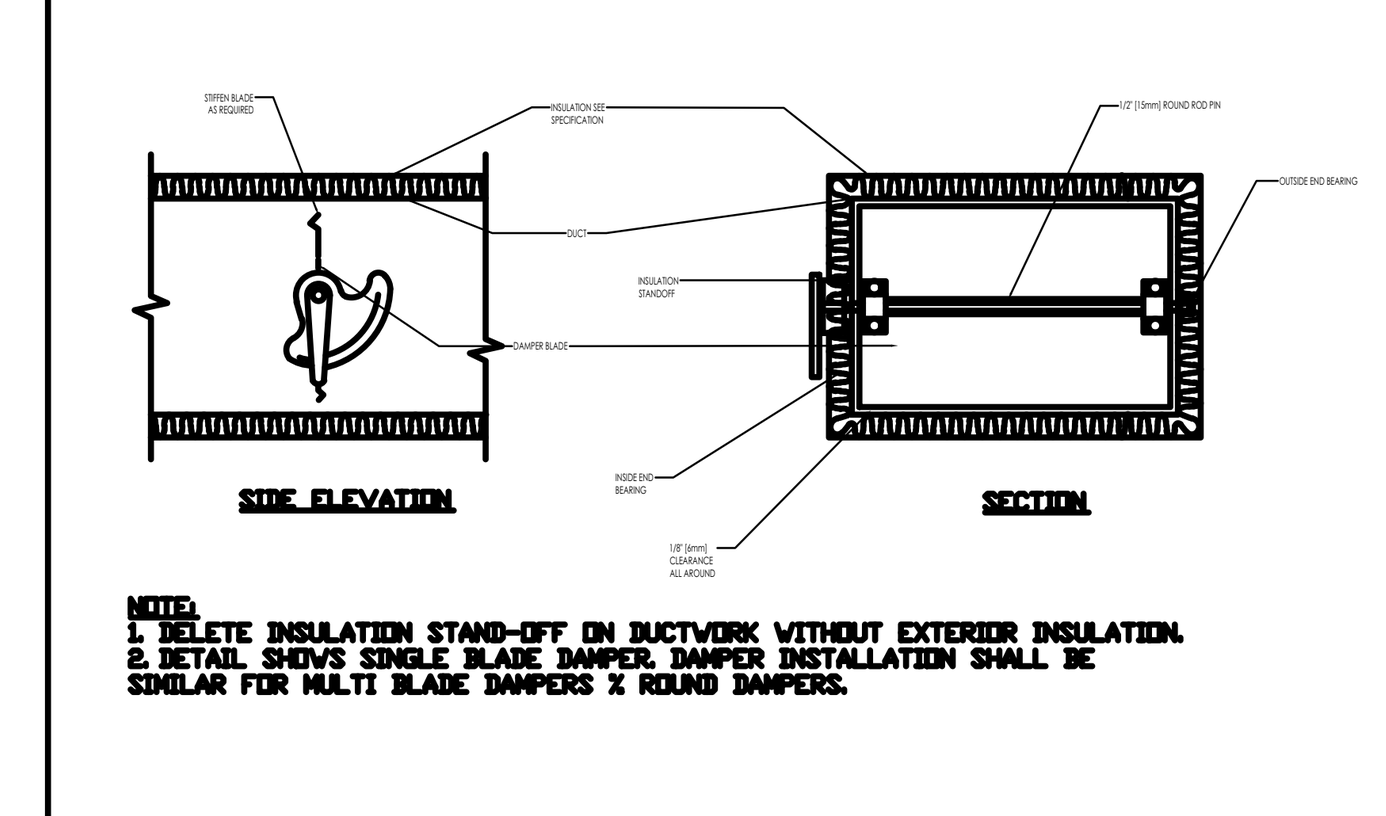

VOLUME DAMPER DETAILS

InnoDez

Address: Foxbrough pl
Pleasanton, CA. 94566
Phone: (424) 414-0997
Web site: www.innodez.com
Email: hello@innodez.com

CLIENT:

ADDRESS:
CITY OF FRESNO CALIFORNIA

CONFIDENTIALITY STATEMENT:

ALL DRAWINGS AND WRITTEN MATERIALS APPEARING HEREIN CONSTITUTE THE ORIGINAL AND UNPUBLISHED WORK OF THE DESIGNER AND THE SAME MAY NOT BE DUPLICATED, USED OR DISCLOSED WITHOUT CONSENT OF THE DESIGNER.

NOTES:
1. ALL DIMENSIONS HEREIN ARE IN IMPERIAL UNITS UNLESS STATED OTHERWISE.
2. THESE DRAWINGS ARE TO BE READ IN CONJUNCTION WITH ALL RELEVANT DESIGNER, ENGINEER OR SPECIALIST DRAWINGS AND SPECIFICATIONS.
3. THE CONTRACTOR MUST CHECK ALL DIMENSION AT SITE BEFORE COMMENCING WORK.
4. THE CONTRACTOR IS RESPONSIBLE FOR PROVIDING ALL NECESSARY TEMPORARY SUPPORT TO THE BUILDING AND ANY ADJACENT STRUCTURES.

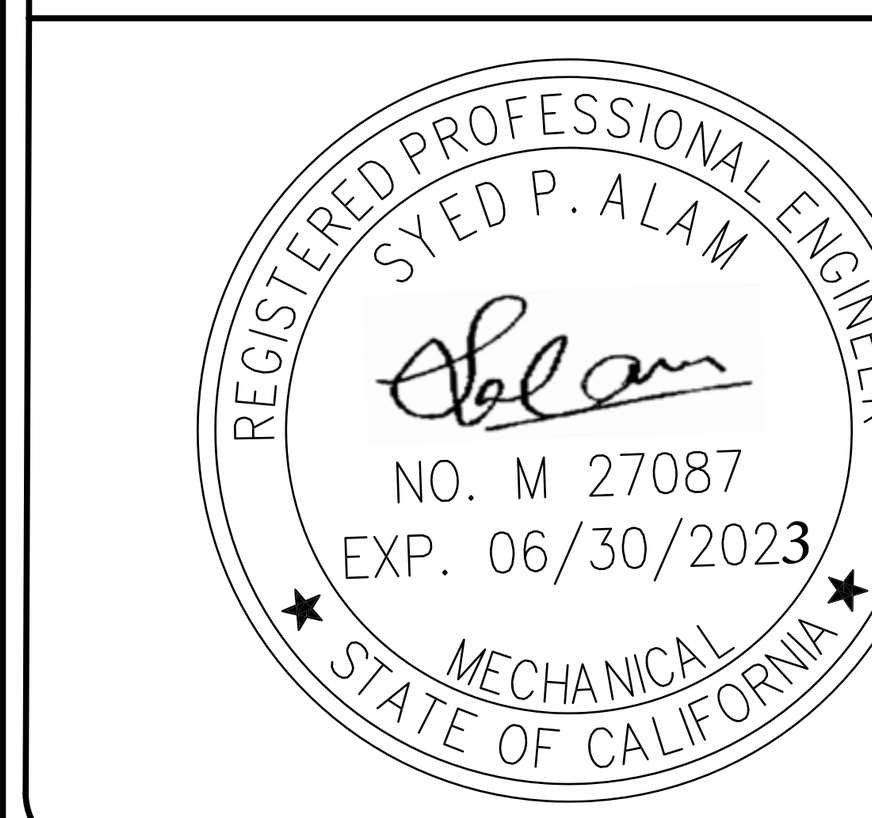

REV. NO.	DESCRIPTION	DATE	BY
02	FOR APPROVAL	06.22	MN
01	FOR APPROVAL	03.22	MN
00	FOR APPROVAL	12.21	MN

PROJECT:
ADU PROGRAM

TITLE:
MECHANICAL LAYOUT UNIT 3

PROJ. NO.	PROJ. ENGR.	SCALE @ 24X36
2104		1/4"=1'-0"

DRAWING NO.	REV.
M1.01	2

NOT FOR CONSTRUCTION
PLAN 3 22-TADU-003

SCHEDULE No. 1

HEAT PUMP - OUTDOOR UNIT

TAG	OU-03 ALT.
SERVING	ADU-03 ALT.
MANUFACTURER	CARRIER
OUTDOOR MODEL	38MGRQ18B--3
SEER	22.5
EER	12.5
MOTOR VOLT / PH / HZ	208/230 / 1 / 60
MINIMUM CIRCUIT AMPACITY	18 A
MAX OVERCURRENT DEVICE	25 A
COOLING / HEATING CAPACITY (BTU/H)	18,000 / 19,000
DIMENSION (W x H x D) INCHES	37 x 28 x 14.5

SCHEDULE No. 2

INDOOR HORIZONTAL FAN COIL UNIT

TAG	IU-03-ALT
LOCATION	CEILING LEVEL
MANUFACTURER	CARRIER
MODEL	40MBDQ12-003
MOTOR VOLT / PH / HZ	208 / 1 / 60
MINIMUM CIRCUIT AMPACITY	1.2 A
AIR FLOW (CFM) - MEDIUM SPEED	397.0
EXTERNAL STATIC PRESSURE (INCHES OF WATER)	0.40
TYPE	HORIZONTAL
RATED COOLING CAPACITY (BTU/H)	12,000
RATED HEATING CAPACITY (BTU/H)	12,000
DIMENSION (W x H x D) INCHES	28 x 8 x 20
WEIGHT (Lbs)	44.0

SCHEDULE No. 3

EXHAUST FAN SCHEDULE

TAG	ERV-01	KH-01
LOCATION	TOILET	KITCHEN
DESIGN SUPPLY VOLUME (CFM)	100	100
SELECT SUPPLY VOLUME (CFM)	100	100
DESIGN PRESSURE DROP (INCH W.C.)	0.100	0.250
SELECTED PRESSURE DROP (INCH W.C.)	0.100	0.250
ELECTRICAL (V / PH / HZ)	120 / 1 / 60	120 / 1 / 60
POWER (W)	81	15.4
RECOVERY EFFICIENCY / RPM	60%	1182
FAN TYPE	CEILING MOUNT	CEILING MOUNT
DRIVE TYPE	DIRECT DRIVE	DIRECT DRIVE
MANUFACTURER	PANASONIC - INTELLI-BALANCE	PANASONIC
MODEL	FV-10VE2	FV-0511KV2
SOUND RATING	1.0 SONE	
MINIMUM SUPPLY VOLUME (CFM)	53	

1. PROVIDE UL LISTING.
2. PROVIDE ENERGY STAR COMPLIANCE.
3. INTERLOCK WITH WALL SWITCH.
4. PROVIDE MOTOR WITH THERMAL OVERLOADS.
5. FOR THE ERV: PROVIDE A READILY ACCESSIBLE OVERRIDE CONTROL (SWITCH). The override control for the whole-building ventilation shall be properly labeled: "Whole House Ventilation Fan. This fan to remain ON at all times the house is occupied."

Energy Standards (Ventilation for Indoor Air Quality)

1: We are having a Continuous Operation of the Whole Building Ventilation System

Total Required Ventilation Rate [ASHRAE 62.2:4.1.1] is calculated per Equation 150.0-B

Equation 150.0-B= 0.03 * Floor area + 7.5 (Nbr+1)

where

Qtot = total required ventilation rate, cfm

Afloor = dwelling-unit floor area, ft2

Nbr = number of bedrooms (not to be less than 1)

Per the above Equation, below are the calculations for each of the ADUs.

For ADU 3: 0.03 * 633 + 7.5 (2+1) = ~ 42 CFM

PROVIDE A PERMANENT ELECTRIC OUTLET AND LIGHT FIXTURE CONTROLLED BY A SWITCH LOCATED AT THE ATTIC ACCESS LOCATION

SCHEDULE No. 4

GRILLES, REGISTERS AND DIFFUSERS SCHEDULE							
TYPE	SERVICE	MFR AND MODEL NO	VOLUME DAMPER	FINISH	FRAME AND BORDER TYPE	MATERIAL	DESCRIPTION
ER	EXHAUST REGISTER	TITUS 350RS	OPPOSED BLADE DAMPER	WHITE ENAMEL	NOTE 1	STEEL	35° FIXED DEFLECTION REGISTER WITH BLADES PARALLEL TO SHORT DIMENSION 3/4" SPACING
R	RETURN GRILLE	TITUS 350R	---	WHITE ENAMEL	NOTE 1	STEEL	35° FIXED DEFLECTION GRILLE WITH BLADES IN HORIZONTAL POSITION 3/4" SPACING
SG	SUPPLY GRILLE	TITUS 300RS	---	WHITE ENAMEL	NOTE 1	STEEL	DOUBLE DEFLECTION GRILLE WITH FRONT BLADES PARALLEL TO SHORT DIMENSION 3/4" SPACING
TG	TRANSFER GRILLE	TITUS 350R	---	WHITE ENAMEL	NOTE 1	STEEL	35° FIXED DEFLECTION GRILLE WITH BLADES IN HORIZONTAL POSITION 3/4" SPACING

NOTE:
1. CONTRACTOR TO VERIFY CEILING TYPE AND PROVIDE PROPER FRAME AND BORDER TYPE. TITUS RAPID MOUNT FRAME FOR GYP. BRD. APPLICATIONS.

SUPPLY GRILLE SIZE SCHEDULE - SG

CFM RANGE	FACE SIZE	DUCT SIZE
0 - 125	8"x8"	6"x6"
126 - 225	10"x10"	8"x8"
226 - 330	14"x8"	12"x6"
331 - 440	14"x10"	12"x8"
441 - 580	14"x12"	12"x10"

FACE SIZE TO BE SIZE SHOWN UNLESS OTHERWISE NOTED

DUCT SIZE TO BE SIZE SHOWN OR EQUIVALENT UNLESS OTHERWISE NOTED

LOUVER SCHEDULE

TAG	TYPE	CFM	PR. DROP W.G.	MANUFACTURER MODEL
L-1	INTAKE AIR	50	0.03	RUSKIN ELF6375DX

RETURN GRILLE SIZE SCHEDULE - R
TRANSFER GRILLE SIZE SCHEDULE - TG

CFM RANGE	FACE SIZE	DUCT SIZE
0 - 150	10"x8"	8"x6"
151 - 275	10"x10"	8"x8"
276 - 600	14"x12"	12"x10"
601 - 1100	24"x12"	14"x14"
1101 - 1750	24"x18"	16"x16"
1751 - 2000	24"x24"	18"x16"

FACE SIZE TO BE SIZE SHOWN UNLESS OTHERWISE NOTED

DUCT SIZE TO BE SIZE SHOWN OR EQUIVALENT UNLESS OTHERWISE NOTED

FLEX DUCT WILL NOT BE ALLOWED ON RETURN GRILLE CONNECTIONS

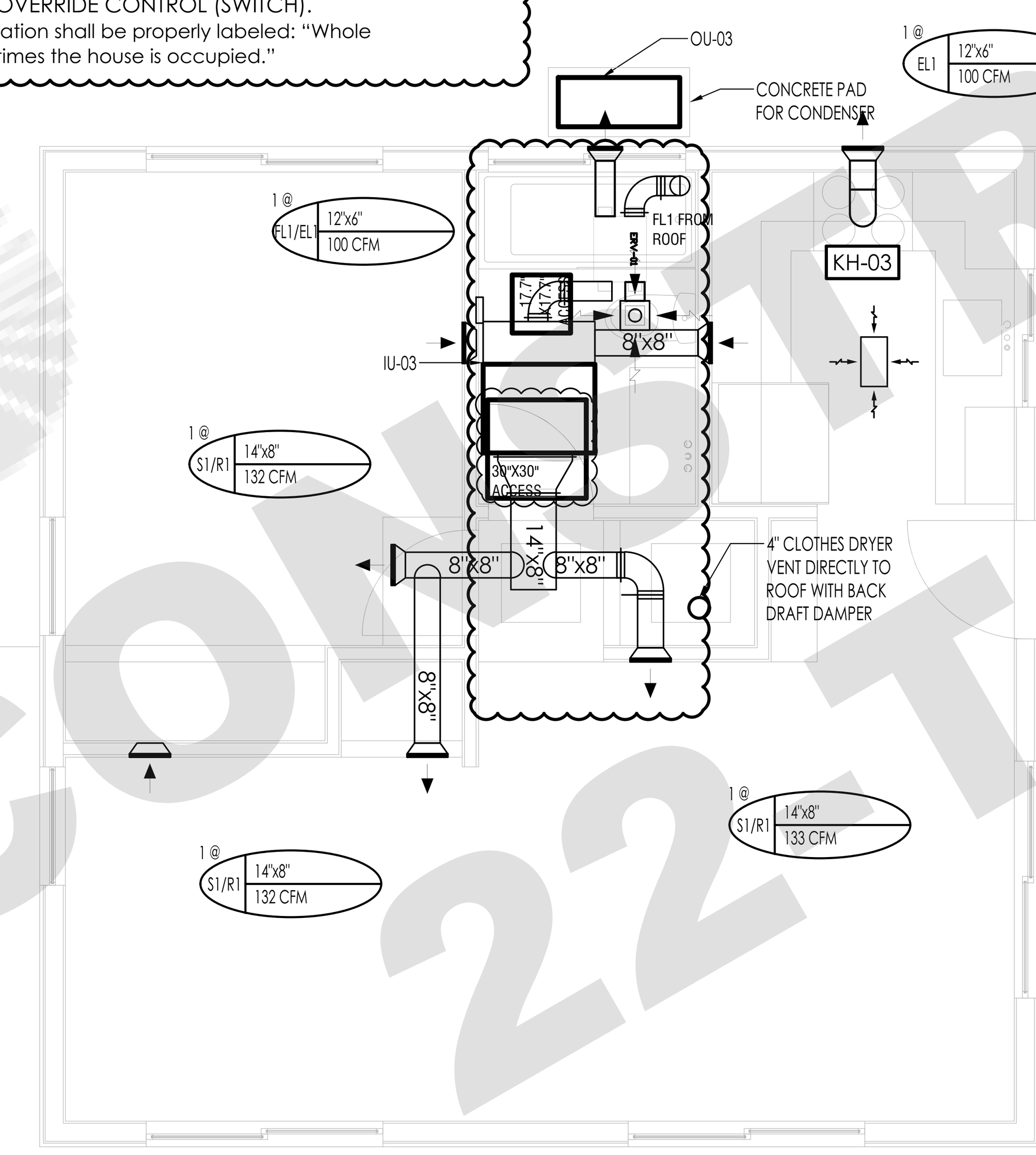

UNIT 03 ALTERNATIVE

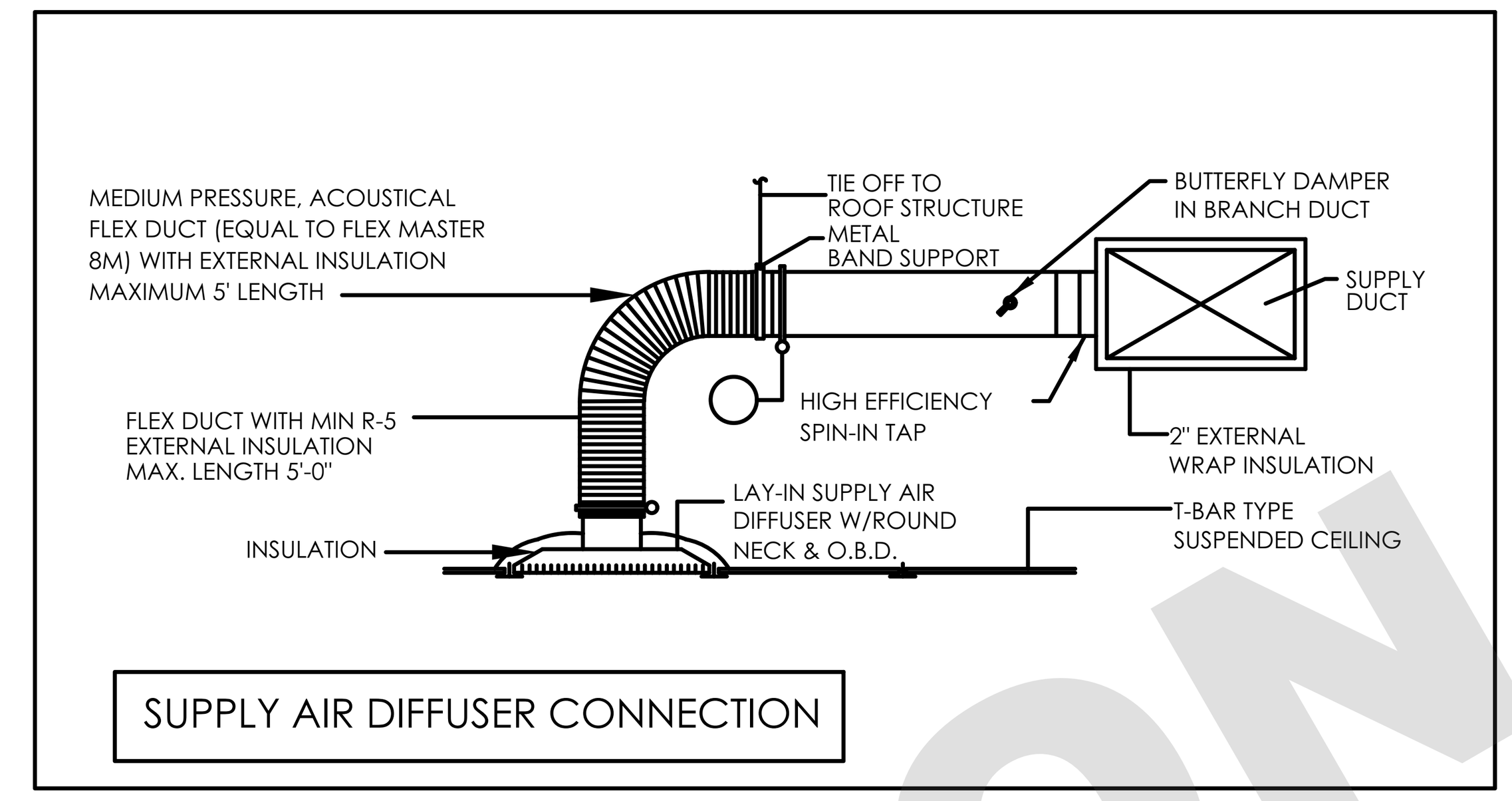

SUPPLY AIR DIFFUSER CONNECTION

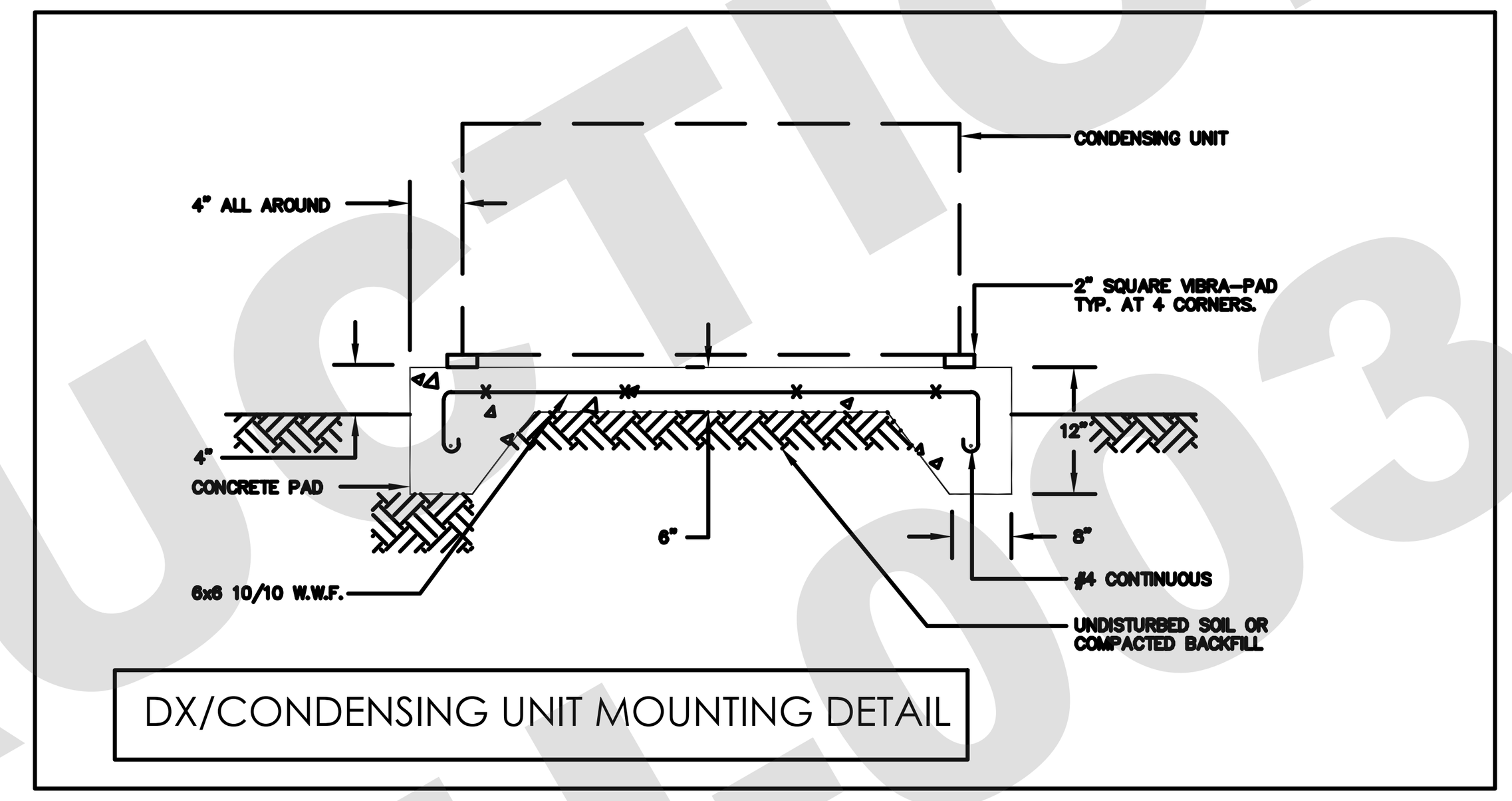

DX/CONDENSING UNIT MOUNTING DETAIL

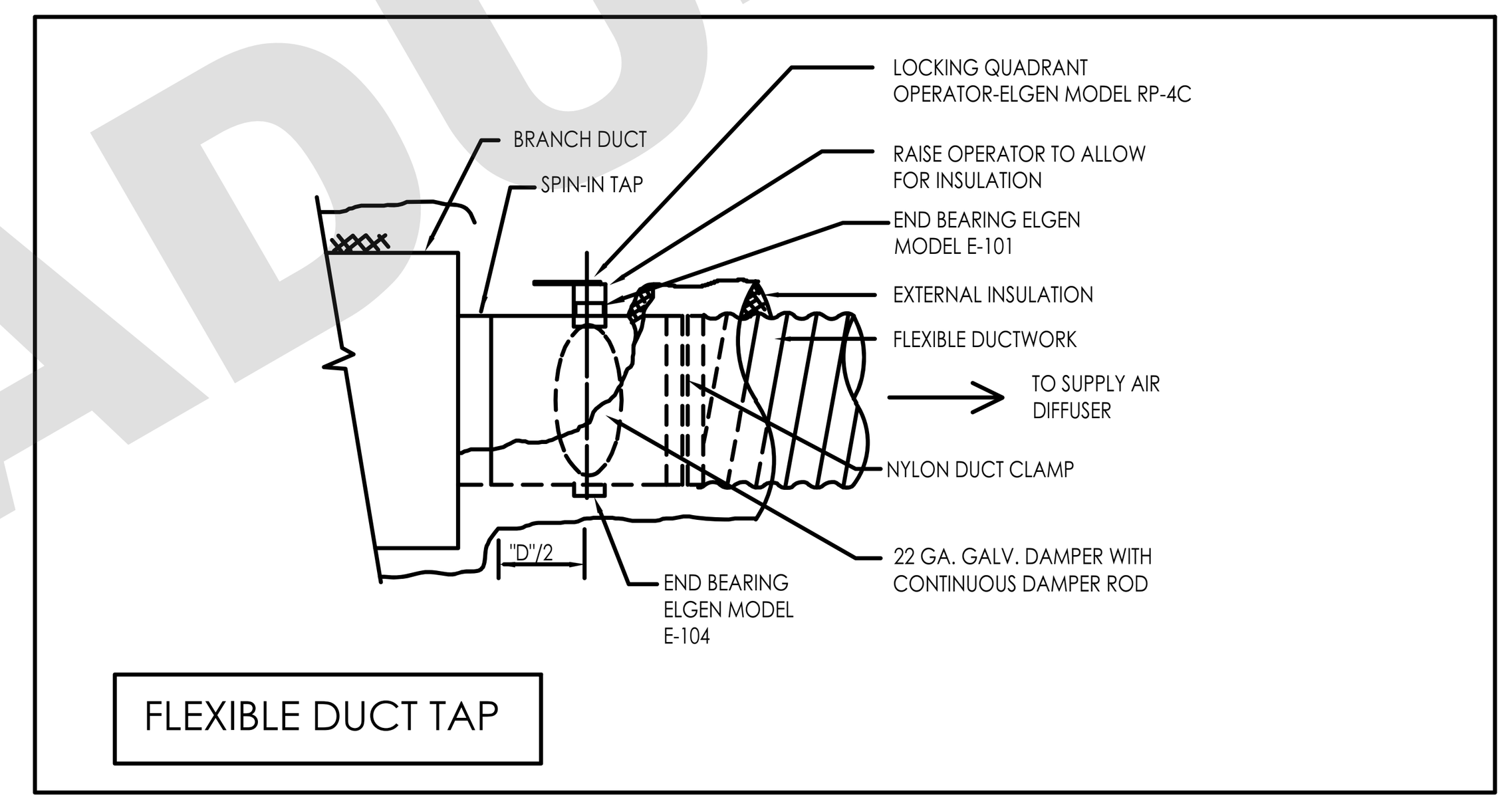

FLEXIBLE DUCT TAP

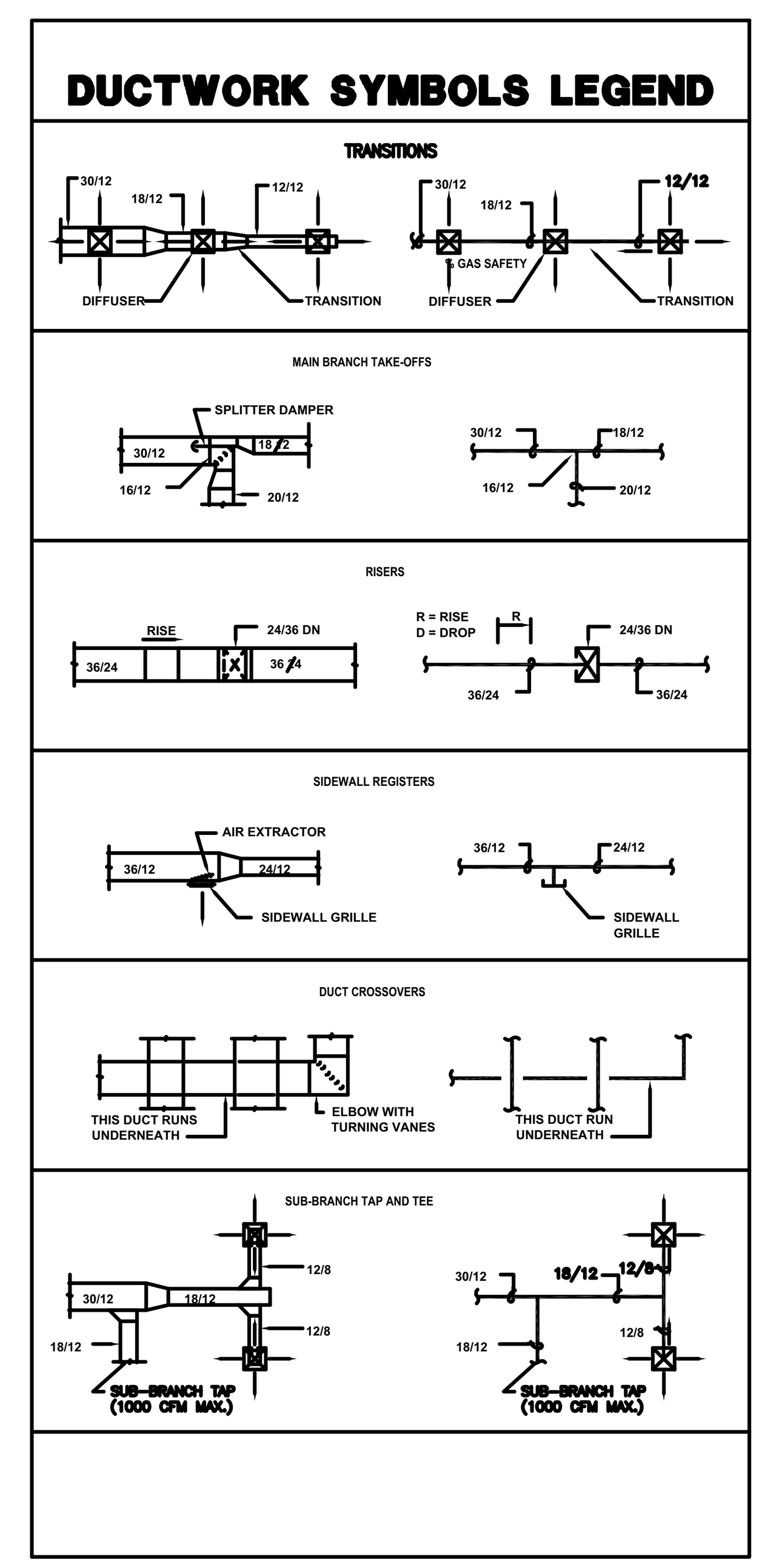

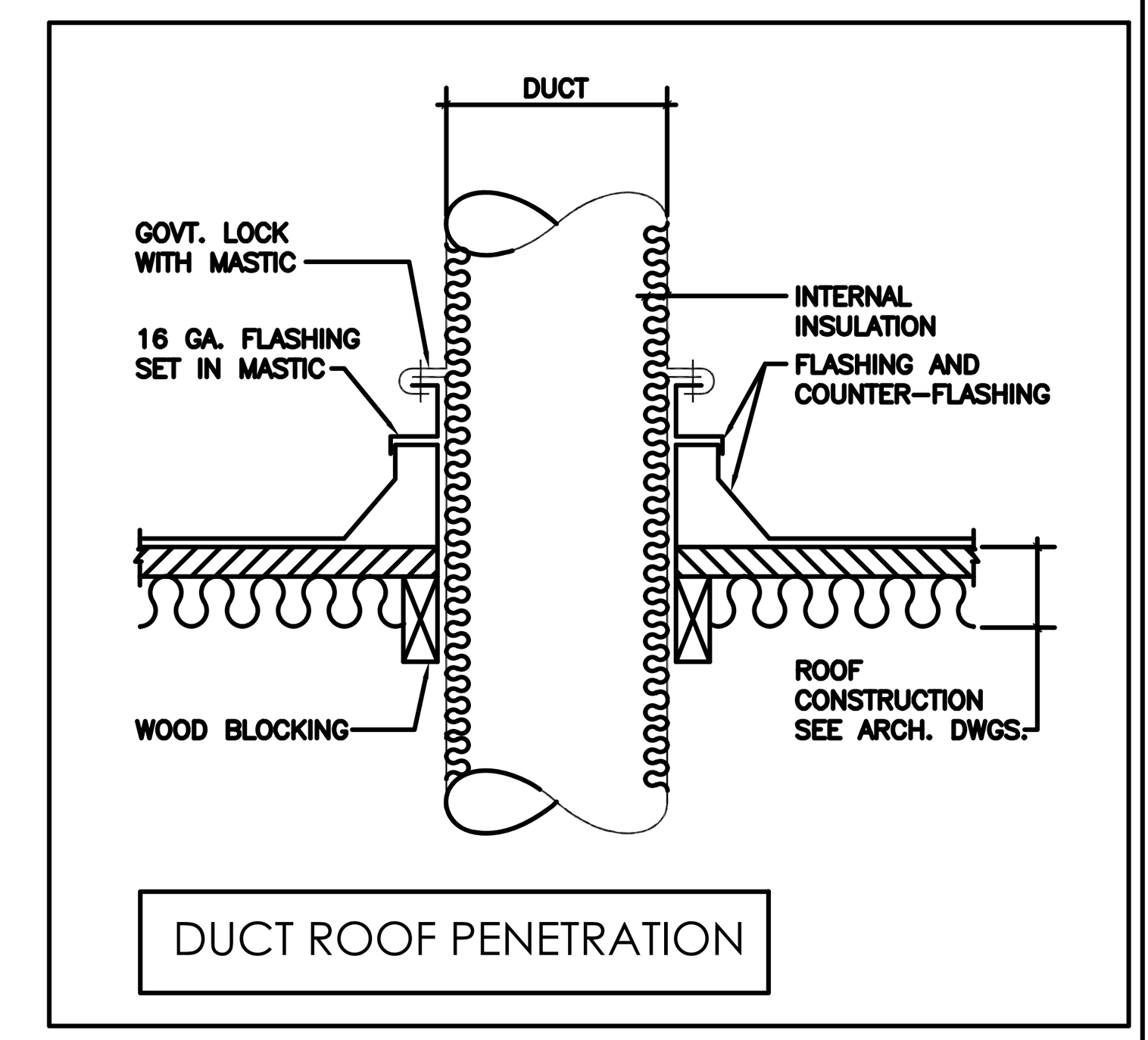

DUCT ROOF PENETRATION

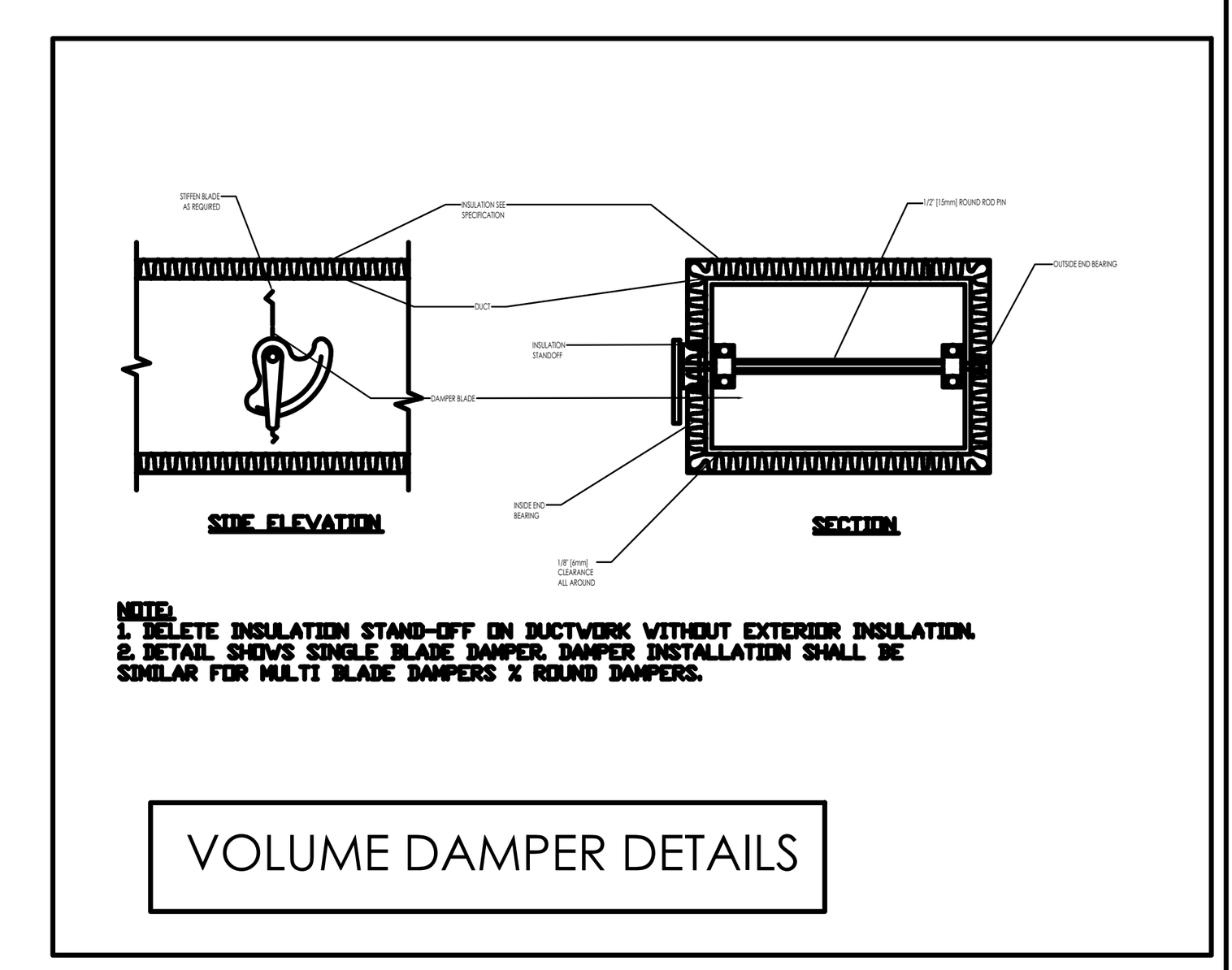

VOLUME DAMPER DETAILS

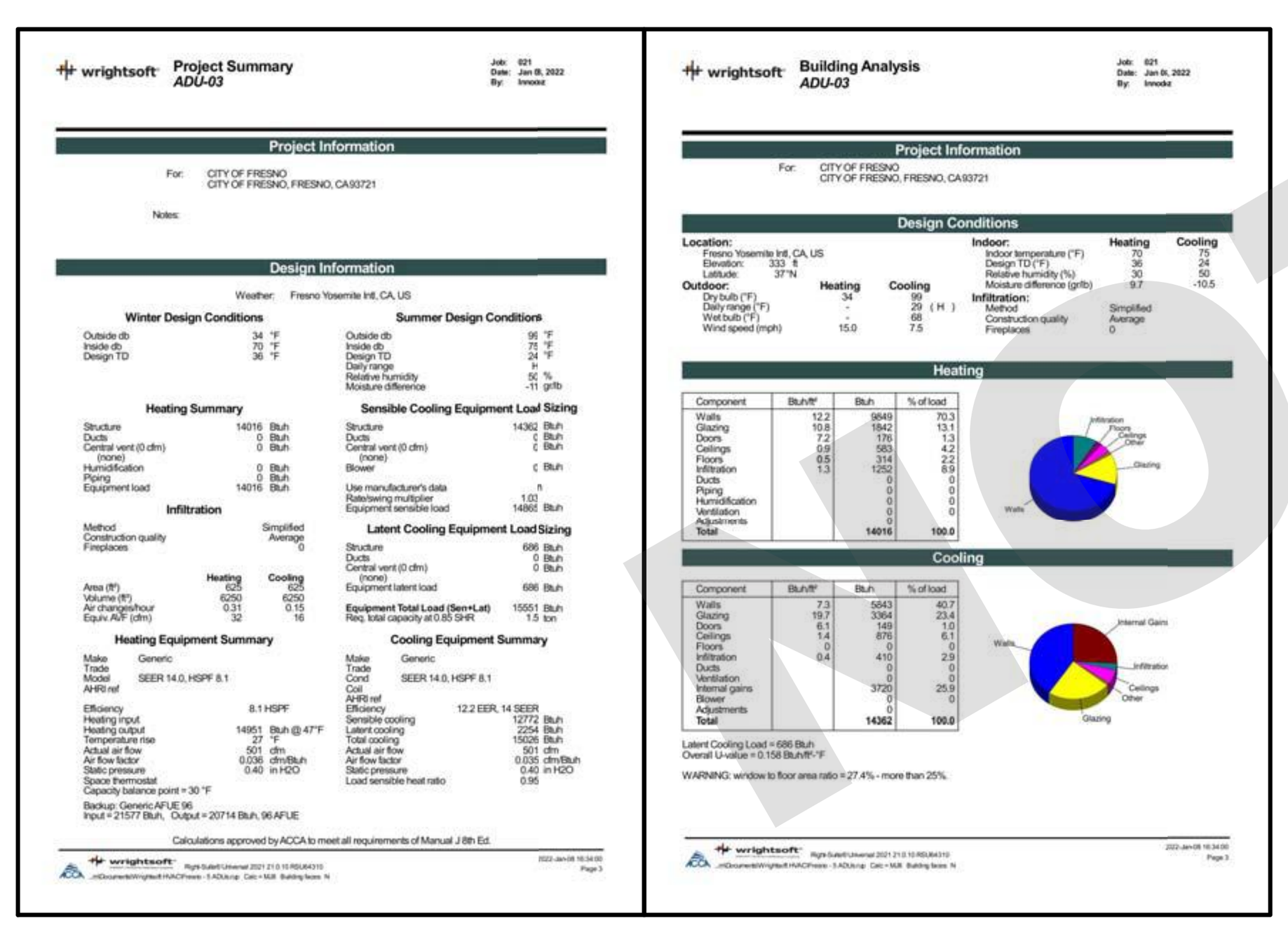

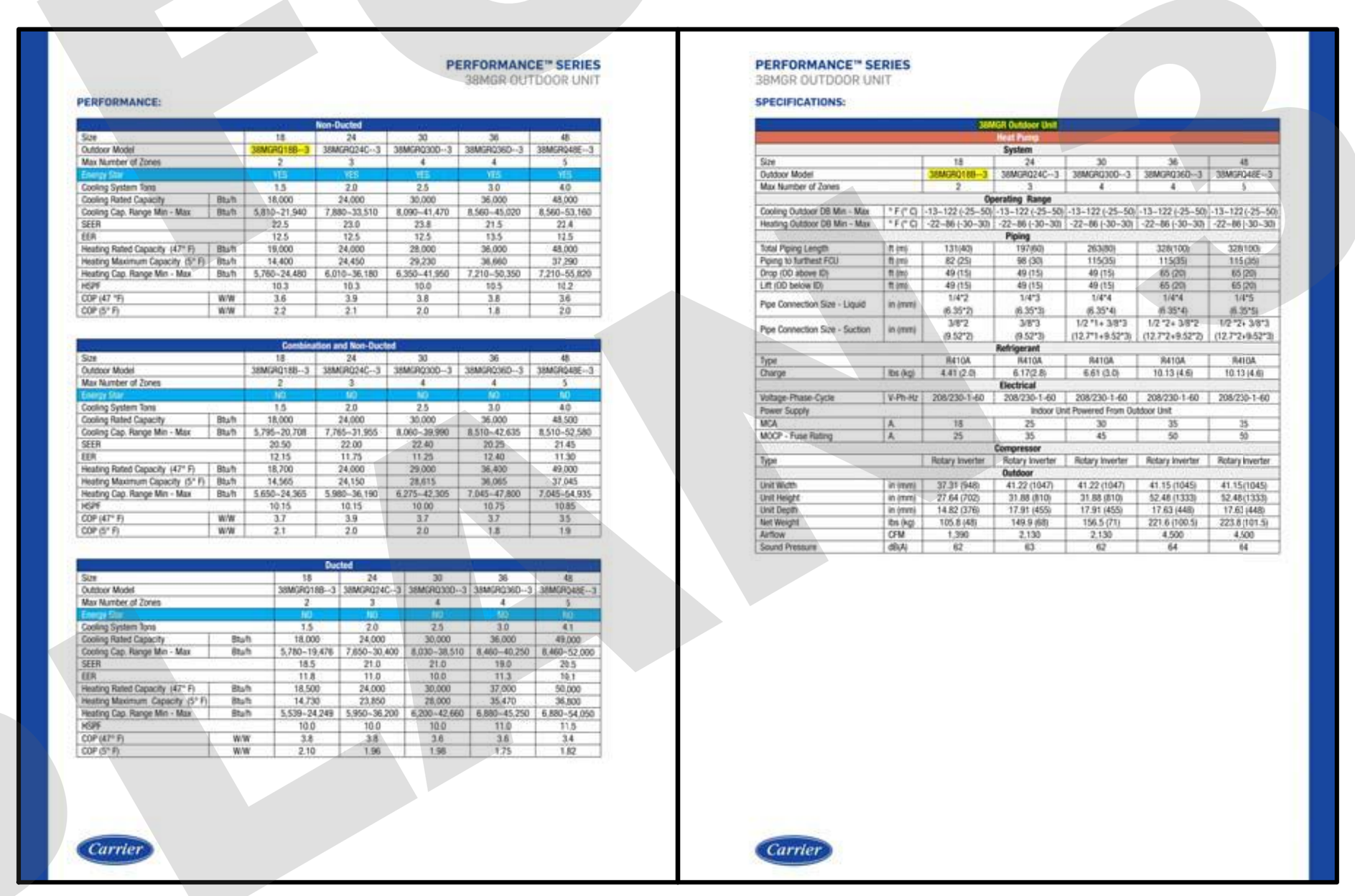

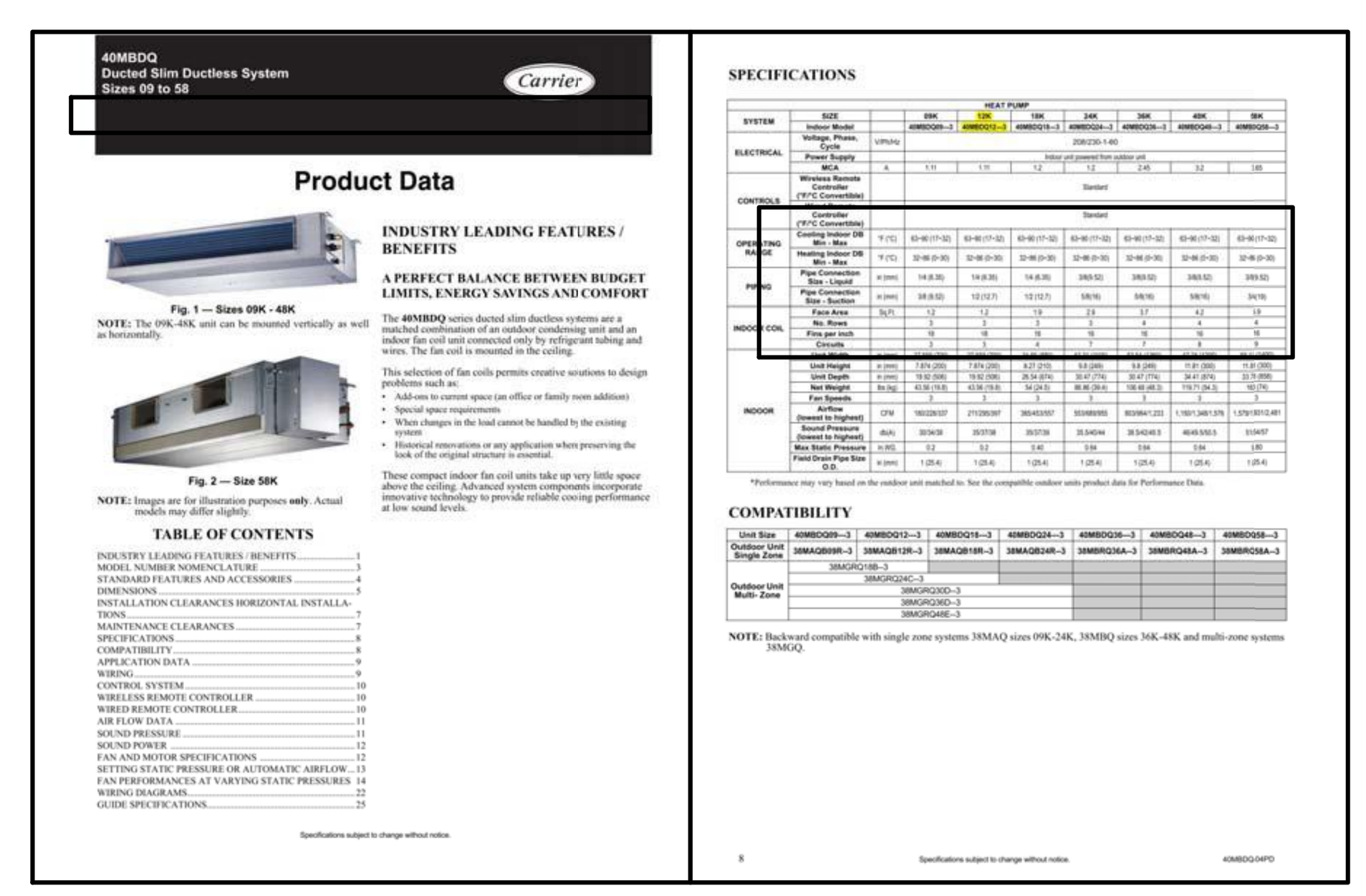

1- AFTER INSTALLING WATER HEATING SYSTEMS, FENESTRATION AND HVAC EQUIPMENT, THE INSTALLER SHALL SUBMIT THE INSTALLATION CERTIFICATE (CF-2R FORM), COMPLETED AND SIGNED BY THE INSTALLER, LISTING THE EQUIPMENT INSTALLED, (MANUFACTURER, MODEL, AND EFFICIENCIES, U-VALUES AND SHGC-VALUES, ETC.) AND THAT IT MEETS OR EXCEEDS THE REQUIREMENTS OF THE ENERGY DOCUMENTATION (CEES SECTION 10-103(a)(3)).
2- UPON INSTALLATION, SPECIAL INSPECTION FOR FIELD VERIFICATION AND DIAGNOSTIC TESTING PERFORMED BY A THIRD PARTY CERTIFIED HERS RATER SHALL BE PROVIDED.
3- AIR CONDITIONING EQUIPMENT DESIGNED TO BE IN A FIXED POSITION SHALL BE SECURELY FASTENED, PER MANUFACTURER'S INSTALLATION INSTRUCTIONS. INSTALLATION INSTRUCTIONS SHALL BE PROVIDED TO THE FIELD INSPECTOR (CMC SECTION 903.4)
4- CMC SECTION 304.1: NOT LESS THAN 30" IN DEPTH, WIDTH AND HEIGHT OF WORKING SPACE SHALL BE PROVIDED IN FRONT OF ATTIC MOUNTED MECHANICAL EQUIPMENT.
5- MECHANICAL SYSTEM INCLUDING HEATING AND AIR CONDITIONING SYSTEMS THAT SUPPLY AIR TO HABITABLE SPACES SHALL HAVE MERV 13 FILTERS OR BETTER. (CEC 150.0(m)(12)(c)
6- UNLESS OTHERWISE PERMITTED OR REQUIRED BY THE DRYER MANUFACTURER'S INSTRUCTIONS AND APPROVED BY THE AUTHORITY HAVING JURISDICTION, DOMESTIC DRYER MOISTURE EXHAUST DUCTS SHALL NOT EXCEED A TOTAL COMBINED HORIZONTAL AND VERTICAL LENGTH OF 14 FEET, INCLUDING TWO 90 DEGREE ELBOWS. A LENGTH OF 2 FEET SHALL BE DEDUCTED FOR EACH 90 DEGREE ELBOW IN EXCESS OF TWO. (CMC504.4.2.1

Provide Special Inspection for Field Verification and Diagnostic Testing performed by a third party certified HERS Rater for the following:
a) Quality insulation installation
b) Indoor air quality ventilation
c) Kitchen range hood
d) Minimum air flow
e) Verified EER
f) Verified SEER
g) Verified refrigerant charge
h) Fan efficacy watts / CFM
i) Verified HSPF
j) Verified heat pump rated heating capacity
k) Duct leakage testing
l) Ducts located entirely in conditioned space confirmed by duct leakage testing

InnoDez

Address: Foxbrough pl Pleasanton, CA. 94566

Phone: (424) 414-0997

Web site: www.innodez.com

Email: hello@innodez.com

CLIENT:

ADDRESS: CITY OF FRESNO CALIFORNIA

CONFIDENTIALITY STATEMENT:

ALL DRAWINGS AND WRITTEN MATERIALS APPEARING HEREIN CONSTITUTE THE ORIGINAL AND UNPUBLISHED WORK OF THE DESIGNER AND THE SAME MAY NOT BE DUPLICATED, USED OR DISCLOSED WITHOUT CONSENT OF THE DESIGNER.

NOTES:

1. ALL DIMENSIONS HEREIN ARE IN IMPERIAL UNITS UNLESS STATED OTHERWISE.
2. THESE DRAWINGS ARE TO BE READ IN CONJUNCTION WITH ALL RELEVANT DESIGNER, ENGINEER OR SPECIALIST DRAWINGS AND SPECIFICATIONS.
3. THE CONTRACTOR MUST CHECK ALL DIMENSION AT SITE BEFORE COMMENCING WORK.
4. THE CONTRACTOR IS RESPONSIBLE FOR PROVIDING ALL NECESSARY TEMPORARY SUPPORT TO THE BUILDING AND ANY ADJACENT STRUCTURES.

REGISTERED PROFESSIONAL ENGINEER SYED P. ALAM NO. M 27087 EXP. 06/30/2023 MECHANICAL STATE OF CALIFORNIA

REV. NO.	DESCRIPTION	DATE	BY
02	FOR APPROVAL	06.22	MN
01	FOR APPROVAL	03.22	MN
00	FOR APPROVAL	12.21	MN

PROJECT: ADU PROGRAM

TITLE: MECHANICAL LAYOUT UNIT 3 ALTERNATIVE

PROJ. NO.	PROJ. ENGR.	SCALE @ 24X36:
2104		1/4"=1'-0"

DRAWING NO. M 1 . 0 1.2

REV. 2

PLUMBING SPECIFICATIONS

THE WORK INCLUDES MODIFICATION TO THE EXISTING PLUMBING SYSTEM AND PROVIDING NEW MATERIALS, FITTINGS AND ACCESSORIES NECESSARY FOR A COMPLETE FUNCTIONING PLUMBING SYSTEM. THE WORK ALSO INCLUDES ROUGH-IN AND FINAL CONNECTIONS TO FOOD SERVICE EQUIPMENT AND BEVERAGE DISPENSING EQUIPMENT PROVIDED BY OTHERS. ALL WORK SHALL BE IN ACCORDANCE WITH LOCAL CODES AND/OR ORDINANCES AND IS SUBJECT TO INSPECTION.

HOOK-UP CHARGES, PERMITS AND ALL OTHER EXPENSES RELATED TO A COMPLETE AND FUNCTIONING PLUMBING SYSTEM ARE INCLUDED AS A PART OF THIS SECTION.

WARRANTY: PROVIDE LABOR AND MATERIALS TO REPAIR OR REPLACE DEFECTIVE PARTS AND MATERIALS AS REQUIRED FOR ONE YEAR AFTER SUBSTANTIAL COMPLETION OR OWNER ACCEPTANCE OF THE COMPLETEED PROJECT. PROVIDE A SEPARATE LINE ITEM DEDUCT AMOUNT ON THE PROPOSAL FORM TO DELETE WARRANTY SERVICE, AT THE OWNER'S OPTION.

THE INTENT OF THE DRAWINGS IS TO INDICATE THE GENERAL EXTENT OF WORK REQUIRED FOR THE PROJECT. THE DRAWINGS FOR PLUMBING WORK ARE DIAGRAMMATIC, SHOWING THE GENERAL LOCATION, TYPE, FIXTURES AND EQUIPMENT REQUIRED. THE DRAWINGS SHALL NOT BE SCALED FOR EXACT MEASUREMENTS. REFER TO MANUFACTURER'S STANDARD ROUGH-IN DRAWINGS FOR PLUMBING FIXTURE INSTALLATION REQUIREMENTS. COMPLY WITH ALL APPLICABLE ADA INSTALLATION REQUIREMENTS.

COORDINATE WITH THE WORK OF OTHER SECTIONS, EQUIPMENT FURNISHED BY OTHERS, AND WITH THE CONSTRAINTS OF THE EXISTING CONDITIONS OF THE PROJECT SITE.

PIPING SYSTEMS - GENERAL: ALL PIPING SHALL BE RUN PARALLEL TO BUILDING LINES AND SUPPORTED AND ANCHORED AS REQUIRED TO FACILITATE EXPANSION AND CONTRACTION. ALL PIPING SHALL BE CONCEALED EXCEPT IN UNFINISHED SPACES. INSTALL AS REQUIRED TO MEET ALL CONSTRUCTION CONDITIONS AND TO ALLOW FOR INSTALLATION OF OTHER WORK SUCH AS DUCTS AND ELECTRICAL CONDUIT. AT ALL CONNECTIONS BETWEEN FERROUS PIPING AND NONFERROUS PIPING, PROVIDE AN ISOLATING DIALECTIC UNION. ALL HANGERS SHALL BE COMPATIBLE WITH PIPING MATERIAL TO PREVENT CORROSION.

PROVIDE ALL FITTINGS, ACCESSORIES, OFFSETS, AND MATERIALS NECESSARY TO FACILITATE THE PLUMBING SYSTEM'S FUNCTIONING AS INDICATED BY THE DESIGN AND THE EQUIPMENT INDICATED.

FIXTURES/EQUIPMENT FURNISHED BY OTHERS: PLUMBING CONTRACTOR SHALL PROVIDE UTILITY CONNECTIONS REQUIRED SUCH AS WATER, GAS, AIR, SUPPLIES, WASTE OUTLET, TRAPS, ETC. AT ALL PLUMBING TYPE FIXTURES OR EQUIPMENT FURNISHED BY OWNER, GENERAL CONTRACTOR, FOOD SERVICE CONTRACTOR, EQUIPMENT SUPPLIER, ETC. INCLUDED ARE STOP VALVES, ESCUTCHEONS, AND CHROME PLATED BRASS TUBING WITH COMPRESSION FITTINGS.

SEWER AND WASTE PIPING: PROVIDE ALL DRAINS AND SEWERS WITHIN THE SPACE WITH CONNECTION TO THE EXISTING DRAINAGE SYSTEMS ON-SITE. SANITARY DRAINAGE PIPING ABOVE FLOOR SHALL BE CO-EXTRUDED PVC DWV (SCHEDULE 40) PIPE, FITTINGS AND CONNECTIONS. SANITARY DRAINAGE PIPING BELOW GRADE SHALL BE CO-EXTRUDED PVC DWV (SCHEDULE 40) PIPE WITH SOLVENT WELD FITTINGS MAY BE USED (WHERE PERMITTED BY CODE/LOCAL AUTHORITIES). ALL DRAINAGE PIPING SHALL BE UNIFORMLY PITCHED, 1/4" PER FOOT UNLESS OTHERWISE REQUIRED BY EXISTING CONDITIONS, OR INDICATED ON THE DRAWINGS.

VENTS: PROVIDE A COMPLETE SYSTEM OF STANDARD WEIGHT CAST IRON NO-HUB VENT RISERS WHERE THE CEILING SPACE IS USED AS A RETURN AIR PLENUM OR USE CO-EXTRUDED PVC DWV (SCHEDULE 40) PIPE (WHERE PERMITTED BY CODE/LOCAL AUTHORITIES) WHERE THERE IS A DUCTED RETURN AIR SYSTEM. DO NOT USE PVC PIPE IN RETURN AIR PLENUM SPACES. THE VENT SYSTEM SHALL BE CARRIED THROUGH THE ROOF WITH APPROPRIATE FLASHING.

CONDENSATE AND INDIRECT DRAIN PIPING:PIPING ABOVE FLOOR SHALL BE CO-EXTRUDED PVC DWV (SCHEDULE 40) PIPE, FITTINGS AND CONNECTIONS. PIPING BELOW GRADE SHALL BE CO-EXTRUDED PVC DWV(SCHEDULE 40) PIPE WITH SOLVENT WELD FITTINGS.

CLEANOUTS: PROVIDE CLEANOUTS AT THE END OF EACH HORIZONTAL RUN, AND AT THE BASE OF ALL VERTICAL WASTE AND DRAIN PIPES. CLEANOUTS SHALL BE OF THE SAME SIZE AS THE PIPES THEY SERVE, CONFORMING TO CODE REQUIREMENTS. PROVIDE SUITABLE WALL OR FLOOR CLEANOUTS WITH ACCESSORIES TO OBSCURE FROM VIEW.

WATER DISTRIBUTION PIPING: LAYOUT WATER PIPING SO THAT THE ENTIRE SYSTEM CAN BE DRAINED. HOT AND COLD WATER PIPING SHALL BE 1/2" MIN. CPVC PIPE WITH SOLVENT FITTING. PROVIDE WATER HAMMER ARRESTERS AT EACH FIXTURE OR GROUP OF FIXTURES AS REQUIRED. INSTALL CHROME PLATED BRASS ESCUTCHEON PLATES AT ALL PENETRATIONS THROUGH FINISHED SURFACES (INCLUDING CABINET INTERIORS).

PIPE INSULATION: INSULATE (AS ALLOWED BY CODE) ALL LISTED SERVICE PIPING AS FOLLOWS. DOMESTIC COLD/HOT WATER, HOT WATER RETURN, STORM WATER PIPING, PROVIDE 1" PREFORMED FIBERGLASS, ASJ/SS-11, FLAME SPREAD 25, SMOKE DEVELOPED 50, ASTM C-547. FOR CONDENSATE PIPING PROVIDE 1/2" THICK INSULATION OF SAME CHARACTERISTICS AS LISTED FOR 1" ABOVE. WHERE PERMITTED BY LOCAL CODES, PROVIDE 1/2" SELF-ADHESIVE UNICELLULAR FOAM PIPE INSULATION WITH PRE-FORMED PVC FITTING COVERS - EQUAL TO SELF-ADHESIVE ARMSTRONG 2000 WITH K FACTOR OF 0.27 AT 75 DEGREES MEAN TEMPERATURE. INSULATE ANY EXPOSED CONDENSATE PIPING WITH WASTE TEMPERATURE BELOW 60 DEGREES F.

SHUTOFF VALVES, WITH UNIONS SHALL BE PROVIDED FOR SERVICE TO EACH PLUMBING FIXTURE, FOOD SERVICE EQUIPMENT ITEM OR OTHER EQUIPMENT ITEM, TO FACILITATE ISOLATION FOR REPAIR OR REPLACEMENT. VALVES SHALL BE EQUAL TO JENKINS #902-T BALL VALVE. CHROME-FINISHED BRONZE, TEFLON SEATS AND PACKING, 400 LB. W.O.G., SOLDER END.

ACCESS PANELS SHALL BE PROVIDED WHERE CONCEALED CONTROL DEVICES, VALVES, ETC. ARE CONCEALED WITHIN WALLS. WHERE ACCESS FOR ADJUSTMENT AND MAINTENANCE IS POSSIBLE THROUGH LAY-IN SUSPENDED CEILINGS, ACCESS PANELS ARE NOT REQUIRED.

PIPING SYSTEM- PVC SCHEDULE 40, SCHEDULE 80 AND CPVC PIPE WITH SOLVENT FITTINGS SHALL BE USED WHERE PEMITTED BY CODE/LOCAL AUTHORITIES.

INSTALLATION: THOROUGHLY CLEAN ITEMS BEFORE INSTALLATION. CAP PIPE OPENINGS TO EXCLUDE DIRT UNTIL FIXTURES ARE INSTALLED AND FINAL CONNECTIONS HAVE BEEN MADE. PROCEED AS RAPIDLY AS CONSTRUCTION WILL PERMIT. SET FIXTURES LEVEL AND IN PROPER ALIGNMENT. INSTALL SUPPLIES IN PROPER ALIGNMENT WITH FIXTURES. INSTALL SILICONE SEALANT BETWEEN FIXTURES AND ADJACENT MATERIAL, FOR SANITARY JOINT, AND OMIT ESCUTCHEONS.

REPAIR EXISTING PLUMBING SYSTEM COMPONENTS DAMAGED BY CONSTRUCTION OPERATIONS AND RESTORE TO ORIGINAL CONDITIONS.

TEST WATER SYSTEM UNDER 150 PSIG HYDROSTATIC PRESSURE. FOR FOUR (4) HOURS MINIMUM. WHEN TESTING INDICATES MATERIALS OR WORKMANSHIP IS DEFICIENT, REPLACE OR REPAIR AS REQUIRED, AND REPEAT TEST UNTIL STANDARDS ARE ACHIEVED.

ROOF PENETRATIONS SHALL COMPLY WITH "SMACNA" AND "NRCA" STANDARDS, AND WITH THE REQUIREMENTS OF THE EXISTING ROOFING WARRANTY, IF APPLICABLE. DO NOT PERFORM ROOFING PENETRATIONS IN A MANNER WHICH WOULD VOID OR OTHERWISE LIMIT THE EXISTING ROOFING WARRANTY.

GENERAL NOTES

1. THE INTENT OF THESE PLANS AND SPECIFICATIONS IS TO INCLUDE ALL LABOR, EQUIPMENT, MATERIALS, AND SERVICES NECESSARY TO FURNISH, INSTALL, TEST, AND ADJUST A COMPLETE WORKABLE PLUMBING INSTALLATION AS SHOWN, PRESCRIBED, OR REASONABLY IMPLIED BUT NOT LIMITED TO THAT EXPLICITLY INDICATED IN THE CONTRACT DOCUMENTS, BUT NECESSARY FOR THE PROPER EXECUTION AND COMPLETION OF THE INTENT THEREOF.
2. THE ENTIRE INSTALLATION SHALL CONFORM TO THE REQUIREMENTS OF 2019 CALIFORNIA CODE AND ALL OTHER APPLICABLE CODES AND REGULATIONS REQUIRED BY AUTHORITIES HAVING JURISDICTION. IN THE EVENT OF CONFLICT BETWEEN SPECIFICATIONS, CODES, AND REGULATIONS, THE MORE RESTRICTIVE SHALL APPLY.
3. COORDINATE ENTIRE INSTALLATION OF THE PLUMBING SYSTEM WITH THE WORK OF OTHER TRADES PRIOR TO ANY FABRICATION OR INSTALLATION. FIELD VERIFY ALL DIMENSIONS AND CONDITIONS. REPORT ANY DISCREPANCIES, IN WRITING, TO THE ENGINEER PRIOR TO COMMENCEMENT OF WORK.
4. CONTRACTOR SHALL PROVIDE AS-BUILT DRAWINGS WITH ALL CHANGES NOTED THEREON AT THE COMPLETION OF THE PROJECT IN ACCORDANCE WITH THE SPECIFICATIONS.
5 PROVIDE ONE YEAR WARRANTY ON ALL PARTS AND LABOR.
6. THE DRAWINGS ARE DIAGRAMMATIC AND INTENDED TO SHOW SCOPE. CONTRACTOR SHALL COORDINATE HIS WORK WITH OTHER TRADES TO PROVIDE THE BEST ARRANGEMENT OF ALL DUCT, PIPE, CONDUIT, ETC.
7. ALL CUTTING AND PATCHING OF THE EXISTING STRUCTURE SHALL BE PROVIDED UNDER OTHER SECTIONS OF THE WORK. PROVIDE NECESSARY REQUIREMENTS TO THE PROJECT SUPERINTENDENT.
8. ALL HOT WATER PIPING AND RECIRCULATION PIPING (EXCEPT RUNOUTS 12 FT. OR SHORTER TO INDIVIDUAL FIXTURES) SHALL BE INSULATED TO MEET THE REQUIREMENTS OF THE 2019 CALIFORNIA PLUMBING CODE.
9. CONDENSATE DRAINS SHALL BE PROVIDED FOR EACH AIR CONDITIONING UNIT. HORIZONTAL CONDENSATE DRAINS ABOVE ANY CEILING SHALL BE INSULATED WITH MIN. 3/8" THICK CLOSED CELL INSULATION.
10. PIPING:
    A. WASTE, VENT, AND STORM DRAIN PIPING SHALL BE CO-EXTRUDED PVC SCHEDULE 40) PIPE
    B. WATER PIPE SHALL BE CPVC PIPE
    C. CONDENSATE PIPING SHALL BE CO-EXTRUDED PVC (SCHEDULE 40) PIPE
    D. INSIDE GAS PIPING SHALL BE BLACK IRON SCHEDULE 40 WITH MALLEABLE IRON FITTINGS, OUTSIDE SHALL BE GALVANIZED IRON SCHEDULE 40 WITH GALVANIZED FITTINGS. GAS LINE TO BE PAINTED GRAY IN COLOR. A 24 HOUR METERED GAS TEST SHALL BE REQUIRED.
    E. ALL PIPING NOT ENCLOSED IN CONDITION SPACE OR AT EXTERIOR WALLS SHALL BE INSULATED.
    F. PIPING: PVC SCHEDULE 40, SCHEDULE 80 AND CPVC PIPING WITH SOLVENT WELD FITTINGS SHALL BE USED WHERE PERMITTED BY CODE/LOCAL AUTHORITIES
11. ALL VENTS OR EXHAUSTS SHALL BE AT LEAST 10 FT. AWAY OR 3 FT. ABOVE ANY WINDOW, DOOR, OPENING, OR AIR INTAKE.
12. CLEANOUTS SHALL BE INSTALLED PER THE CALIFORNIA PLUMBING CODE
13. PROVIDE WATER TIGHT FLASHINGS WHEREVER PIPES PASS THROUGH EXTERIOR WALLS, ROOFS, OR FLOORS.
14. PROVIDE ISOLATION FOR ALL PIPES THAT COME IN CONTACT WITH THE STRUCTURE.
15. LOCATION OF EXISTING UTILITIES AND POINTS OF CONNECTION ARE APPROXIMATE. CONTRACTOR SHALL VERIFY EXACT LOCATIONS AND DEPTHS OF EXISTING UTILITIES AND SERVICES PRIOR TO STARTING WORK OF THIS SECTION. IF INDICATED POINTS OF CONNECTION CANNOT BE MADE TO EXISTING UTILITIES AS FOUND, THE CONTRACTOR SHALL NOTIFY THE ENGINEER PRIOR TO INSTALLING ANY WORK WHICH MAY BE AFFECTED.
16. VALVES SHALL BE NIBCO, JENKINS, HAMMOND, RED & WHITE OR APPROVED EQUAL. SERVICE PRESSURE SHALL BE SUITABLE FOR SERVICE INTENDED. THE MAIN WATER SHUT OF VALVE SHALL BE A FULL PORT BALL TYPE AND APPROVED FOR SERVICE INTENDED.
17. CONTRACTOR SHALL PROVIDE ALL SHUT OFF VALVES AS NECESSARY TO ISOLATE ANY EQUIPMENT, PLUMBING ITEMS, OR FIXTURES, THAT MAY NEED SERVICING OR ARE SUBJECT TO FAILURE WHETHER OR NOT SUCH VALVES ARE SHOWN ON THE DRAWINGS.
18. PROVIDE HANGERS AND SUPPORTS AS REQUIRED. PLUMBERS TAPE AND WIRE ARE NOT ACCEPTABLE.
19. CONTRACTOR IS RESPONSIBLE FOR HIS OWN TRENCHING, BACKFILL, AND COMPACTION OF TRENCHES NECESSARY TO COMPLETE HIS SCOPE OF WORK. BACKFILLED TRENCHES SHALL BE RETURNED TO THEIR ORIGINAL GRADE UNLESS NOTED OTHERWISE.
20. CONTRACTOR SHALL AFFIX A MAINTENANCE LABEL TO ALL EQUIPMENT REQUIRING ROUTINE MAINTENANCE AND SHALL PROVIDE MAINTENANCE AND OPERATIONAL MANUALS IN ACCORDANCE WITH THE SPECIFICATIONS.
21. ALL EQUIPMENT THAT REQUIRES KEYS OR SPECIAL TOOLS TO OPERATE SHALL SUPPLY THE OWNER WITH TWO OF ANY SUCH KEYS OR TOOLS FOR EACH PIECE OF EQUIPMENT THAT REQUIRE THE SAME.
25. ANY CHANGE OR DEVIATION FROM THESE PLANS OR SPECIFICATIONS SHALL REQUIRE THE APPROVAL, IN WRITING, OF THE ENGINEER PRIOR TO COMMENCEMENT OF SUCH WORK.
26. ALL PLUMBING, ELECTRICAL, AND GAS LINES SHALL BE CONCEALED WITHIN THE THE BUILDING STRUCTURE TO AS GREAT EXTENT AS POSSIBLE. ALL LINES NOT CONCEALED SHALL BE SECURED 6' OFF THE FLOOR AND 3/4" FROM THE WALLS USING STANDOFF BRACKETS
27. AN APPROVED BACKFLOW PREVENTOR SHALL BE PROPERLY INSTALLED UPSTREAM OF ANY POTENTIAL HAZARD BETWEEN THE POTABLE WATER SUPPLY AND SOURCE OF COMTAMINATION.
28. WATER SUPPLY CARBONATORS SHALL BE PROTECTED BY AN APPROVED REDUCED PRESSURE PRINCIPLE BACKFLOW PREVENTOR. THE RELIEF VALVE SHALL DRAIN IN-DIRECTLY TO A FLOOR SINK WITH A 1" MIN. AIR GAP.

PIPE MATERIAL SCHEDULE

SERVICE		COPPER TYPE "M"	COPPER TYPE "L"	COPPER TYPE "K"	CAST IRON	BLACK STEEL	GALV. STEEL	VTRI. CLAY	ABS	SCH.40 PVC	SCH.40 CPVC	REMARKS
WATER PIPING	INSIDE		X									
	OUTSIDE									X		
SANITARY DRAIN	INSIDE									X		
	OUTSIDE									X		
SANITARY VENT	INSIDE									X		
	OUTSIDE									X		
GAS PIPING	INSIDE					X						
	OUTSIDE						X					
STORM DRAIN	INSIDE									X		
	OUTSIDE									X		
INDIRECT DRAINAGE	INSIDE									X		
	OUTSIDE									X		
CONDESATE	INSIDE									X		
	OUTSIDE									X		
COMPRESSED AIR	INSIDE					X						
	OUTSIDE						X					

NOTES:

PLUMBING LEGEND

SYMBOL	ABBREV	DESCRIPTION
	SS or W	NEW SEWER OR WASTE
	V	NEW VENT
	CW	NEW COLD WATER
	HW	NEW HOT WATER
	G	NEW GAS
	CD	NEW CONDENSATE DRAIN
-CA-	CA	COMPRESSED AIR
	FCO	FLOOR CLEANOUT
I-O	WCO	WALL CLEANOUT
FD	FD	FLOOR DRAIN
FS	FS	FLOOR SINK
	TP	TRAP PRIMER & TRAP PRIMER PIPING
	SOV	SHUT-OFF VALVE
	CV	CHECK VALVE
	PRV	BACKFLOW PREVENTER W SOV'S
T & P		
	DN	PIPE DOWN
	UP	PIPE UP
	POC	POINT OF CONNECTION
7	-	PLUMBING NOTE CALL-OUT
	ABV	ABOVE
	AFF	ABOVE FINISH FLOOR
	AP	ACCESS PANEL
	BEL	BELOW
	BLDG	BUILDING
	CLG	CEILING
	CONT	CONTINUATION
	EL	ELEVATION
	FIN	FINISH
	FL	FLOOR
	GR	GRADE
	NTS	NOT TO SCALE
	OC	ON CENTER
S= 1/4		SLOPE AT A PERCENTAGE
	SHT	SHEET
	TYP	TYPICAL
	VTR	VENT THRU ROOF

PLUMBING / GENERAL NOTES

BATHTUBS AND WHIRLPOOL BATHTUBS. THE MAX. HOT WATER TEMPERATURE DISCHARGING SHALL BE LIMITED TO 120 DEGREES. CPC 414/2019
BATHTUBS WASTE OPENING IN FLOOR OVER CRAWL SPACES SHALL BE PROTECTED BY A METAL SCREEN NOT EXCEEDING 12" OR SOLID COVER. CPC 313.12.4 2019
SHOWERS AND TUB-SHOWERS COMBINATIONS IN ALL BUILDINGS SHALL BE PROVIDED WITH INDIVIDUAL CONTROL VALVES OF THE PRESSURE BALANCE, THERMOSTATIC, OR COMBINATION OF BOTH THAT PROVIDE SCALD AND THERMAL SHOCK PROTECTION. VALVES SHALL BE ADJUSTED TO DELIVER A MAXIMUM MIXED WATER SETTING OF 120 DEGREES FAHRENHEIT. THE WATER HEATER THERMOSTAT SHALL NOT BE CONSIDERED A SUITABLE CONTROL FOR MEETING THIS PROVISION. 418.0 CPC/2019
VERIFY AND WHERE WATER PRESSURE EXCEEDS 80 PSI AN APPROVED PRESSURE REGULATOR PRECEDED BY AN ADEQUATE STRAINER SHALL BE INSTALLED 608.2 CPC / 2019
1-INSTALL TEMPERATURE AND PRESSURE RELIEF VALVE WITH MINIMUM 34" DRAIN PIPE AND TERMINATE TO THE EXTERIOR OF THE BUILDING OVER WINDOW, DOOR OR VISIBLE LOCATION. DISCHARGE FROM A RELIEF VALVE INTO A WATER HEATER PAN SHALL BE PROHIBITED CPC 608.5, 510.8.
2-PROVIDE (ON THE PLANS) A GAS PIPING DIAGRAM OF THE GAS PIPING SYSTEM THAT INCLUDES ALL PIPE SIZES, PIPE LENGTHS AND BTU RATINGS.

3-SUBMIT GAS LOAD CALCULATIONS IN ACCORDANCE WITH CPC TABLE 12-B TO VERIFY THE PIPE SIZES ARE ADEQUATE FOR THE MAXIMUM DELIVERY CAPACITY OF CUBIC FEET OF GAS PER HOUR.
4- A WHOLE HOUSE HAS TEST IS REQUIRED UPON COMPLETION OF THE INSTALLATION, ALTERATION, OR REPAIR OF ANY GAS PIPING.
THE CITY SHALL BE NOTIFIED WHEN GAS PIPING IS READY FOR INSPECTION.
5- 2 GPM SHOWER FIXTURE, MAX.1.5 GPM BATHROOM FAUCET, MAX. 2 GPM KITCHEN FAUCET, AND MAX 1.28 WATER CLOSET TO CONFORM TO CITY GREEN REQUIREMENTS.

BATHROOMS: PROVIDE AN EXHAUST FAN (AT LEAST 50 CFM) DUCTED TO THE OUTSIDE (MINIMUM 4" DIAMETER FLEX DUCT WITH A MAXIMUM LENGTH OF 70")WITH A MINIMUM VENTILATION RATE OF 100 CFM, IDENTIFY THE REQUIREMENT FOR A BACKDRAFT DAMPER ON THE DUCT, AN ENERGY STAR COMPLIANT EXHAUST FAN THAT IS CONTROLLED BY A HUMIDITY SENSOR THAT IS CAPABLE OF BEING ADJUSTED BETWEEN ≤ 50-PERCENT TO 80-PERCENT HUMIDITY; AND A SEPARATE SWITCH FROM THE LIGHT UNLESS THE FAN IS ALLOWED TO OPERATE WITH THE LIGHT SWITCHED OFF.

6-NOTE THAT ALL PLUMBING VENTS SHALL TERMINATE NOT LESS THAN 6" ABOVE ROOF NOR LESS THAN 1' FROM ANY VERTICAL SURFACE. VENTS SHALL TERMINATE NOT LESS THAN 10' FROM OR 3' ABOVE ANY WINDOW, DOOR OPENING AIR INTAKE, OR VENT SHAFT NOR 3' FROM LOT LINE.
(2019 CPC 906) IF WATER PRESSURE EXCEEDS 80 PSI, AND EXPANSION TANK AND AN APPROVED PRESSURE REGULATOR SHALL BE INSTALLED. (2019 CPC608.2)
NON-REMOVABLE BACK FLOW PRE-VENTER OR BIBB-TYPE VACUUM BREAKER WILL BE INSTALLED ON ALL EXTERIOR HOSE BIBS. (2019 CPC603.4.7)
HOT WATER RE-CIRCULATING SYSTEM IS INSTALLED, THE ENTIRE LENGTH OF HOT WATER PIPES SHALL BE INSULATED. (2008 CALIFORNIA ENERGY REGULATIONS 150 (J))
HOT WATER PIPE FROM THE WATER HEATER TO THE KITCHEN WILL BE INSULATED. (CALIFORNIA ENERGY REGULATIONS 151(F)8 D)

WATER SAVING STANDARDS

THE WATER SAVING PERFORMANCE STANDARDS FOR A PLUMBING FIXTURE ARE THOSE ESTABLISHED BY THE AMERICAN NATIONAL STANDARDS INSTITUTE (ANSI), CURRENT REVISION, OR THE FOLLOWING STANDARDS, WHICHEVER ARE THE MORE RESTRICTIVE
1.THE MAXIMUM FLOW FROM A SINK OR LAVATORY FAUCET OR A FAUCET AERATOR SHALL NOT EXCEED 0 5 GALLONS OF WATER PER MINUTE AT A PRESSURE OF 60 POUNDS PER SQUARE INCH WHEN TESTED IN ACCORDANCE WITH ANSI TESTING PROCEDURES
2.THE MAXIMUM VOLUME OF WATER PER FLUSH FROM A TOILET SHALL NOT EXCEED AN AVERAGE OF 1 28 GALLONS WHEN TESTED IN ACCORDANCE WITH ANSI TESTING PROCEDURES
3. THE MAXIMUM VOLUME OF WATER PER FLUSH FROM A URINAL AND THE ASSOCIATED FLUSH VALVE, IF ANY, SHALL NOT EXCEED AN AVERAGE OF ONE GALLON WHEN TESTED IN ACCORDANCE WITH ANSI TESTING PROCEDURES

SPECIAL NOTICE TO CONTRACTORS

1. ALL CONTRACTORS (GENERAL CONTRACTOR AND SUB-CONTRACTORS) BIDDING THIS PROJECT ARE REQUIRED TO VISIT THE JOB SITE AND VERIFY THE EXISTING CONDITIONS PRIOR TO SUBMITTING THEIR BID. CONTRACTORS ARE TO CAREFULLY REVIEW ALL CONSTRUCTION DOCUMENTS AND NOTE ANY DISCREPANCIES BETWEEN THE CONSTRUCTION DOCUMENTS AND THE CONDITIONS OBSERVED AT THE JOB SITE PRIOR TO SUBMISSION OF ANY BID. THE BUILDING OWNER REPRESENTATIVE LISTED BELOW MAY BE CONTACTED FOR ACCESS TO THE JOB SITE.
2. CONTRACTORS ARE RESPONSIBLE FOR VERIFYING THE LOCATION AND CONDITION OF ALL POINTS OF CONNECTION, LOCATION AND CONDITION OF ALL BUILDING (ROOF/FLOOR/CEILING) PENETRATIONS, LOCATION AND CONDITION OF ALL UTILITIES AND BUILDING SYSTEMS INCLUDING, BUT NOT LIMITED TO, GAS, WATER, SEWER, VENT, ELECTRICAL, BUILDING MECHANICAL SYSTEMS, DUCT CONNECTIONS, EXHAUST/OUTSIDE AIR CONNECTIONS, SECURITY, FIRE ALARM, DATA, AND PHONE PRIOR TO SUBMISSION OF THEIR BID.
3. ANY DISCREPANCIES BETWEEN THE CONSTRUCTION DOCUMENTS AND THE CONDITIONS OBSERVED SHALL BE BROUGHT TO THE ATTENTION, IN WRITING, TO THE ARCHITECT AND/OR ENGINEER PRIOR TO PROCEEDING WITH CONSTRUCTION.

FOR CONSTRUCTION
NOT FOR PERMIT

InnoDez

Address: Foxbrough pl
Pleasanton, CA. 94566
Phone: (424) 414-0997
Web site: www.innodez.com
Email: hello@innodez.com

CLIENT:

ADDRESS:
CITY OF FRESNO CALIFORNIA

CONFIDENTIALITY STATEMENT:

ALL DRAWINGS AND WRITTEN MATERIALS APPEARING HEREIN CONSTITUTE THE ORIGINAL AND UNPUBLISHED WORK OF THE DESIGNER AND THE SAME MAY NOT BE DUPLICATED, USED OR DISCLOSED WITHOUT CONSENT OF THE DESIGNER.

NOTES:

1. ALL DIMENSIONS HEREIN ARE IN IMPERIAL UNITS UNLESS STATED OTHERWISE.
2. THESE DRAWINGS ARE TO BE READ IN CONJUNCTION WITH ALL RELEVANT DESIGNER, ENGINEER OR SPECIALIST DRAWINGS AND SPECIFICATIONS.
3. THE CONTRACTOR MUST CHECK ALL DIMENSION AT SITE BEFORE COMMENCING WORK.
4. THE CONTRACTOR IS RESPONSIBLE FOR PROVIDING ALL NECESSARY TEMPORARY SUPPORT TO THE BUILDING AND ANY ADJACENT STRUCTURES.

REGISTERED PROFESSIONAL ENGINEER
SYED P. ALAM
NO. M 27087
EXP. 06/30/2023
MECHANICAL
STATE OF CALIFORNIA

REV. NO.	DESCRIPTION	DATE	BY
02	FOR APPROVAL	06.22	MN
01	FOR APPROVAL	03.22	MN
00	FOR APPROVAL	12.21	MN

PROJECT:
ADU PROGRAM

TITLE:
PLUMBING SPECIFICATIONS, DETAILS & SYMBOLS

PROJ. NO.	PROJ. ENGR.	SCALE @ 24X36:
2104		NTS

DRAWING NO.: P0.00
REV.: 2

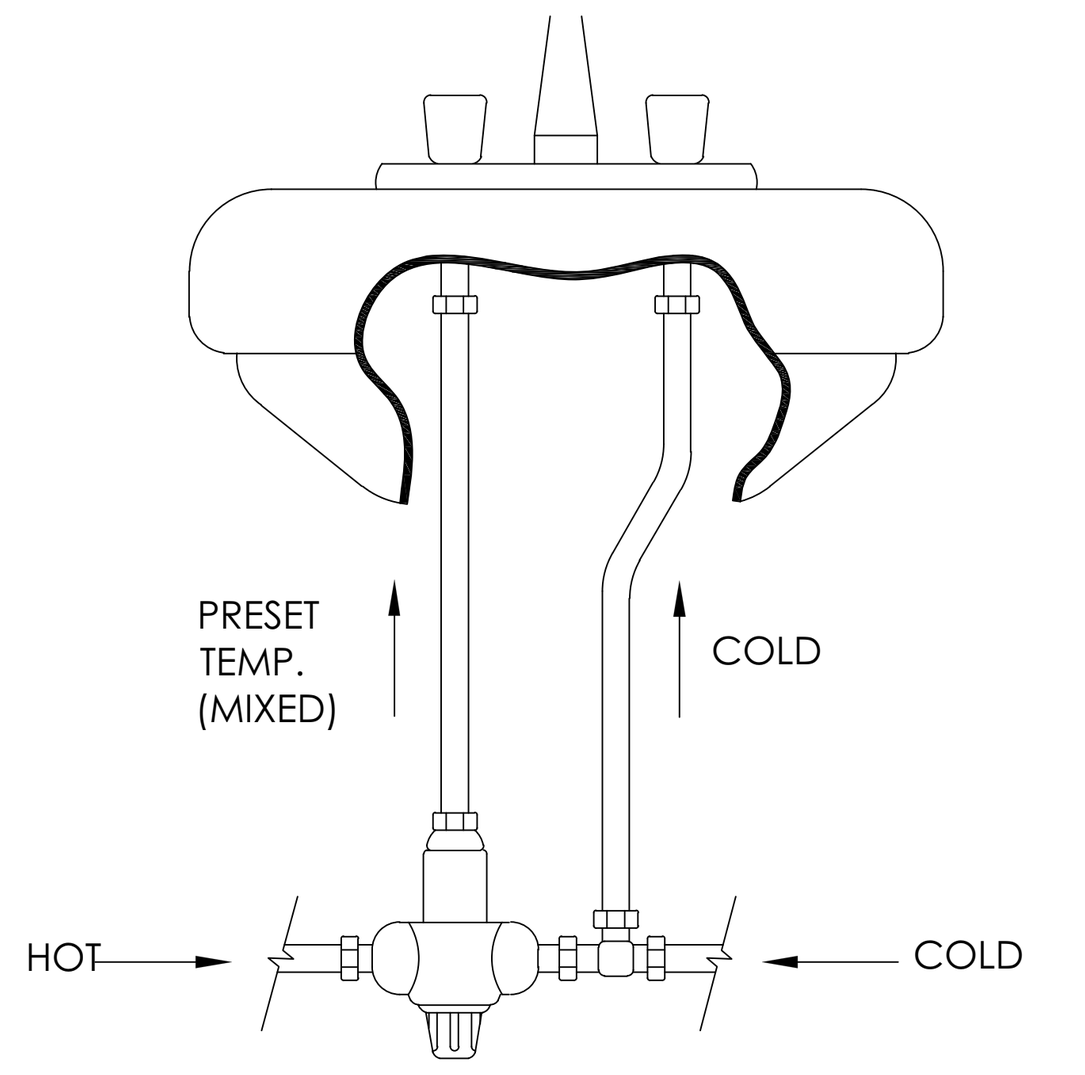

ANTI-SCALD MIXING VALVE

NO SCALE

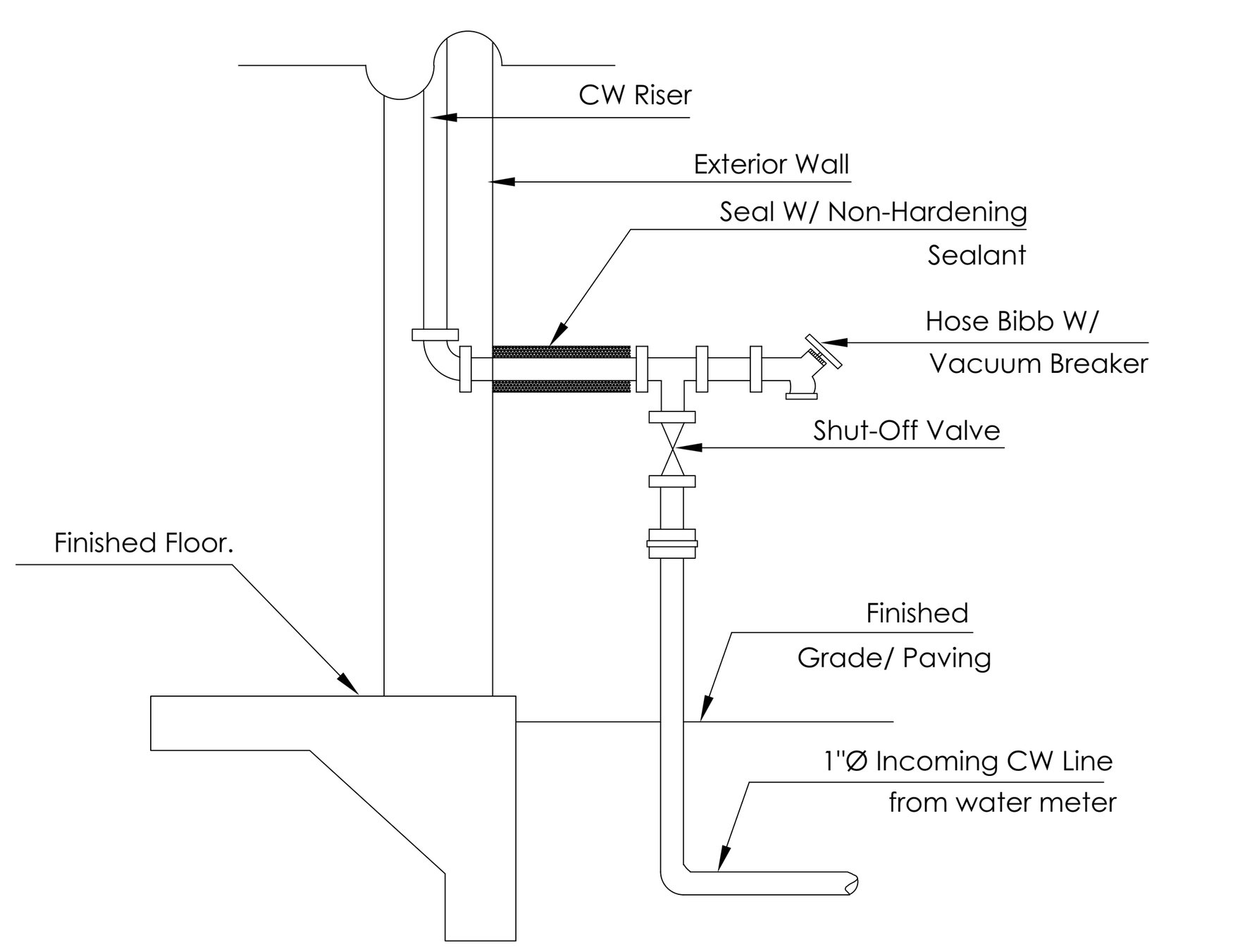

WATER ENTRY DETAIL

NO SCALE

TABLE 610.3: WSFU

FIXTURE UNIT	PRIVATE
SHOWER	2.0
WATER CLOSET	2.5
LAVATORY	1.0
KITCHEN SINK	1.5
CLOTHES WASHER	4.0
TOTAL WSFU	11.0

BASED ON TABLE 610.4 FOR 150 FEET & 35 PSI, THE MAIN PIPE SIZE FOR PRESSURE RANGE BETWEEN 30 AND 45 PSI IS EQUAL TO 1"

SCHEDULE No. 1
RESIDENTIAL GAS TANKLESS WATER HEATER

TAG	GWH-3
LOCATION	TOILET GROUND FLOOR
MANUFACTURER	NAVIEN
MODEL	NPE-240A2
TYPE	Gas
HEATING (MBH)	15 - 150
ENERGY FACTOR	0.95
MINIMUM FLOW RATE (GPM)	0.50
ELECTRICAL POWER (W)	350.00
DIMENSION (W x H x D) INCHES	17.3" x 27.4" x 13.2"
ELECTRICAL V/PH/HZ	120/1/60
HOT ,COLD & GAS CONNECTION (INCH)	3/4 NPT

1- AT TIME OF LOT SPECIFIC BUILDING PERMIT APPLICATION IF THE APPLICANT WOULD LIKE TO HAVE SEPARATE UTILITY METERS FROM THE EXISTING RESIDENCE, THEY MUST CONTACT THE CITY OF FRESNO PLANNING AND PUBLIC WORKS DEPARTMENT FOR APPROVAL AND ZONE CLEARANCES.'

2- AT TIME OF LOT SPECIFIC BUILDING PERMIT APPLICATION, IT WILL BE DETERMINED BY THE CITY OF FRESNO FIRE PREVENTION BUREAU IF FIRE SPRINKLER WILL BE REQUIRED FOR THE ACCESSORY DWELLING UNIT. IF REQUIRED, APPROVED FIRE SPRINKLER PLAN SHALL BE INCLUDED IN PLANS PRIOR TO PERMIT ISSUANCE.

3- WHEN DEVELOPMENT LENGTH EXCEEDS 150 FEET TO THE MOST REMOTE PLUMBING FIXTURE THE WATER SERVICE DESIGN WILL BE REVIEWED AT TIME OF LOT SPECIFIC BUILDING PERMIT APPLICATION.

4- GALVANIZED MALLEABLE IRON, GALVANIZED WROUGHT IRON, OR GALVANIZED STEEL ARE PROHIBITED MATERIALS FOR WATER SUPPLY AND BUILDING WATER PIPING BOTH UNDERGROUND AND IN BUILDING.

5- ALL DOMESTIC HOT WATER PIPING SHALL BE INSULATED AS SPECIFIED IN CPC SECTION 609.11. IN ADDITION, PIPING MUST MEET REQUIREMENTS OF CALIFORNIA ENERGY CODE SECTION 150(j)(2)(A) i, ii & iii.

6- ALL PLUMBING CONVEYING OR DISPENSING WATER FOR HUMAN CONSUMPTION SHALL COMPLY WITH AB 1953 FOR LEAD CONTENT.

7- WATER HEATER SHALL BE PROVIDED WITH ISOLATION VALVES ON BOTH COLD AND HOT WATER CONNECTION. EACH VALVE NEEDS A HOSE BIBBS OR OTHER FITTING ALLOWING FOR FLUSHING THE WATER HEATER WHEN THE VALVES ARE CLOSED.

8- EACH VALVE NEEDS A HOSE BIBB OR OTHER FITTING FOR FLUSHING THE WATER HEATER WHEN THE VALVES ARE CLOSED.

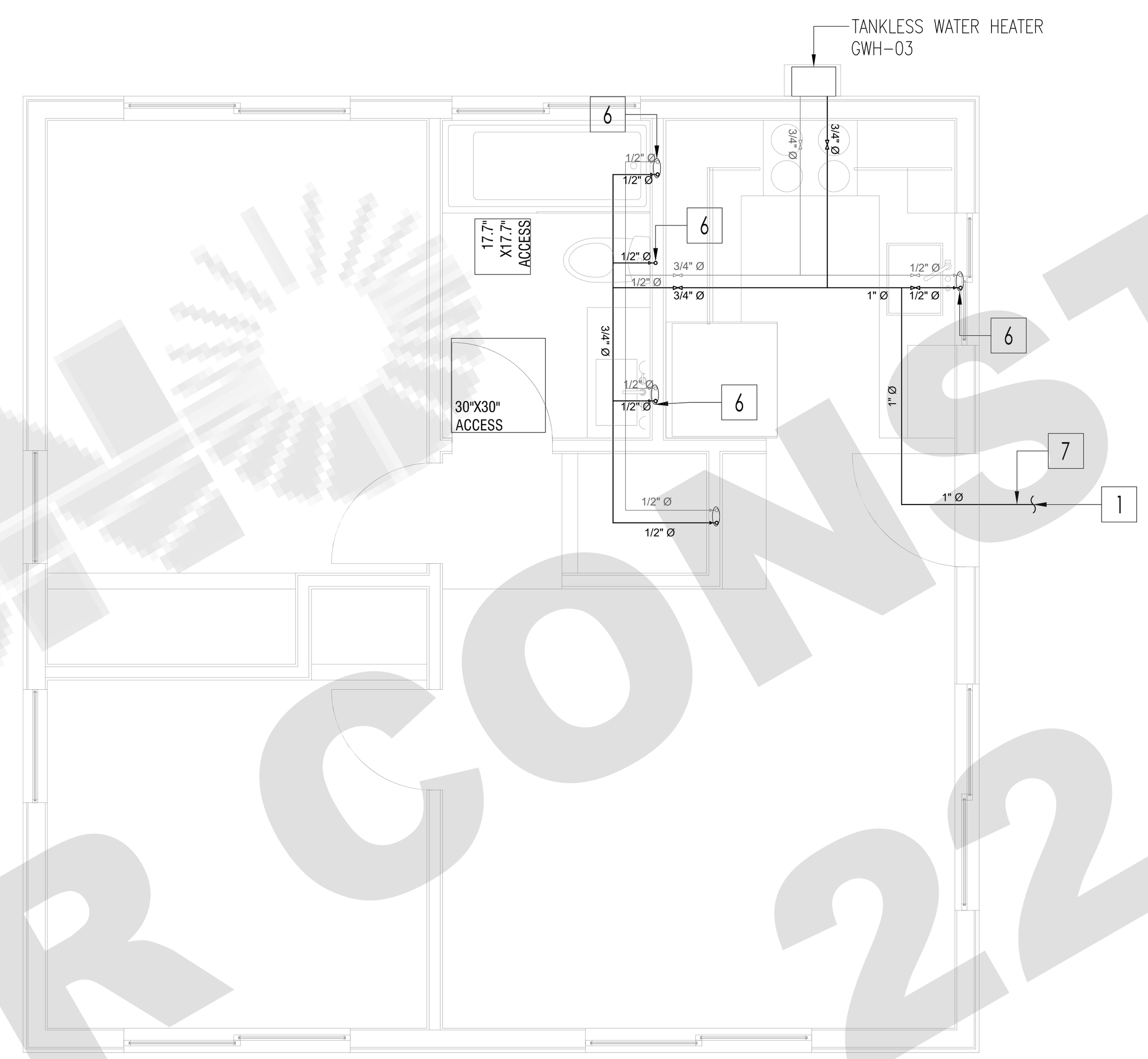

UNIT 03



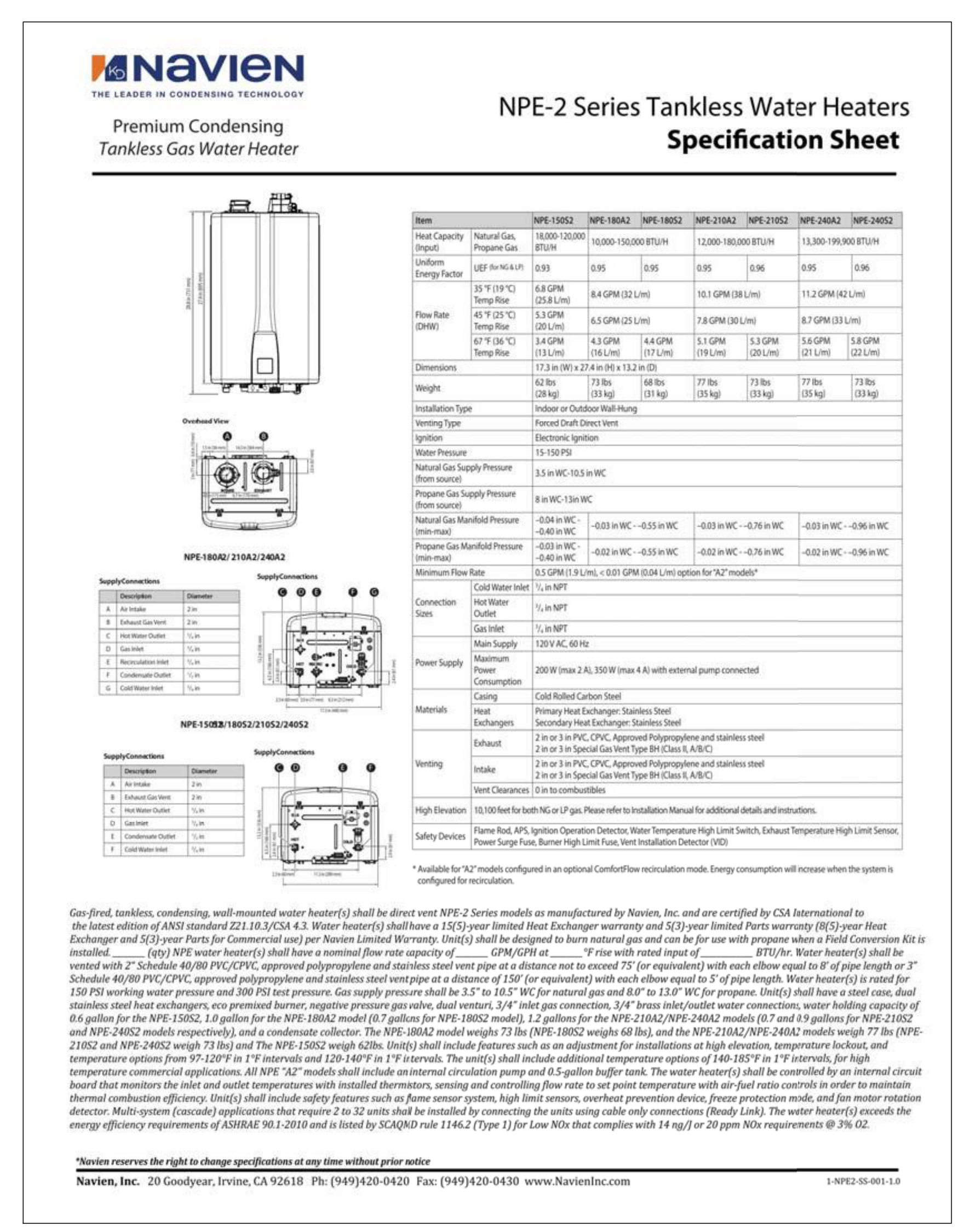

WATER CONSERVING PLUMBING FIXTURES AND FITTINGS	
Plumbing fixtures and fittings shall comply with the following: **(2019 CGBSC, California Plumbing Code (CPC) and Table 1401.1 of the CPC)**	
4303.1.1	All Water closets: <1.28 gal/flush Tank type water closet shall be certified to the performance criteria of the U.S. EPA WaterSense Specification for Tank-type Toilets.
4303.1.2	Urinals: <0.5 gal/flush
4303.1.3.1	Single showerheads: <1.8 gpm @ 80 psi
4303.1.3.2	Multiple showerheads: combined flow rate of all showerheads and/or other shower outlets controlled by a single valve shall not exceed 1.8 gpm @ 80 psi or only one shower outlet is to be in operation at a time.
4303.1.4.1	Residential Lavatory Faucets: 0.8 gpm @ 20 psi < **Flow Rate** <1.2 gpm @ 60 psi
4303.1.4.2	Lavatory Faucets in common and Public Use Areas (outside of dwellings or sleeping units) in residential buildings: <0.5 gpm @ 60 psi
4303.1.4.3	Metering Faucets: <0.25 gallons per cycle
4303.1.4.4	Kitchen Faucets: <1.8 gpm @ 60 psi; Maximum Flow Rate of 1.8 gpm

PLUMBING FIXTURE CERTIFICATION REQUIRED:
A plumbing fixture certification must be completed and signed by either a licensed general contractor, or a plumbing subcontractor, or the building owner certifying the flow rate of the fixtures installed. A copy of the certification can be obtained from the development services department.

MINIMUM PIPE SIZE PER FIXTURE

FIXTURE UNIT	CWP (INCH)	HWP (INCH)
SHOWER	1/2	1/2
WATER CLOSET	1/2	-
LAVATORY	1/2	1/2
KITCHEN SINK	1/2	1/2
DISHWASHER	-	1/2
BATHTUB	1/2	1/2
LAUNDRY MACHINE	1/2	1/2

PLUMBING SHEET NOTES

SHEET NOTES:

1 — 1" Ø DCW FROM MUNICIPALITY.

2 — DCW, DHW & HWR UP IN WALL TO ABOVE FLOOR.

3 — DCW, DHW & HWRP DOWN IN WALL TO UNDER TILES LEVEL.

4 — DCW, DHW & DHC FROM BELOW FLOOR.

5 — DCW, DHW & RHWP UP IN WALL TO HIGH LEVEL.

6 — DCW / DHW DOWN IN WALL TO FIXTURE CONNECTION.

7 — WATER METER FOR EACH UNIT

City of FRESNO NOT FOR CONSTRUCTION PLAN 3 22-TADU-003

InnoDez

Address: Foxbrough pl Pleasanton, CA. 94566
Phone: (424) 414-0997
Web site: www.innodez.com
Email: hello@innodez.com

CLIENT:

ADDRESS: CITY OF FRESNO CALIFORNIA

CONFIDENTIALITY STATEMENT:

ALL DRAWINGS AND WRITTEN MATERIALS APPEARING HEREIN CONSTITUTE THE ORIGINAL AND UNPUBLISHED WORK OF THE DESIGNER AND THE SAME MAY NOT BE DUPLICATED, USED OR DISCLOSED WITHOUT CONSENT OF THE DESIGNER.

NOTES:

1. ALL DIMENSIONS HEREIN ARE IN IMPERIAL UNITS UNLESS STATED OTHERWISE.
2. THESE DRAWINGS ARE TO BE READ IN CONJUNCTION WITH ALL RELEVANT DESIGNER, ENGINEER OR SPECIALIST DRAWINGS AND SPECIFICATIONS.
3. THE CONTRACTOR MUST CHECK ALL DIMENSION AT SITE BEFORE COMMENCING WORK.
4. THE CONTRACTOR IS RESPONSIBLE FOR PROVIDING ALL NECESSARY TEMPORARY SUPPORT TO THE BUILDING AND ANY ADJACENT STRUCTURES.

REGISTERED PROFESSIONAL ENGINEER SYED P. ALAM NO. M 27087 EXP. 06/30/2023 MECHANICAL STATE OF CALIFORNIA

REV. NO.	DESCRIPTION	DATE	BY
02	FOR APPROVAL	06.22	MN
01	FOR APPROVAL	03.22	MN
00	FOR APPROVAL	12.21	MN

PROJECT: **ADU PROGRAM**

TITLE: **WATER SUPPLY LAYOUT UNIT 3**

PROJ. NO.	PROJ. ENGR.	SCALE @ 24X36
2104		1/4"=1'-0"

DRAWING NO.	REV.
P1.01	2

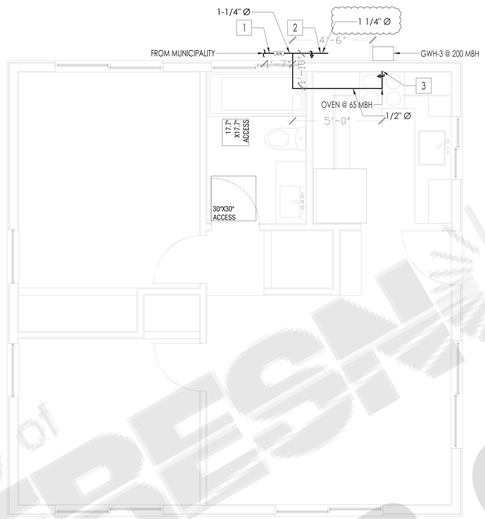

UNIT 03

1- WHEN DEVELOPMENT LENGTH EXCEEDS 175 FEET THE GAS SERVICE DESIGN WILL BE REVIEWED AT TIME OF LOT SPECIFIC BUILDING PERMIT APPLICATION.

PLUMBING SHEET NOTES

SHEET NOTES:

1 - GAS METER

2 - GAS CONNECT TO GAS WATER HEATER

3 - GAS CONNECT TO OVEN

SIZED PER TABLE 1215.2(1) FROM THE CPC 2019

GENERAL NOTES:

1. PRIOR TO PERFORMING WORK, CONTRACTOR TO COORDINATE EXACT PIPE SIZES, INVERT ELEVATIONS, PRESSURES FOR LOCATIONS OF ANY SEWER, WATER PIPING AND WATER METER WITH CIVIL UTILITIES DRAWINGS, AND ANY OTHER ENGINEER AS APPLICABLE.
2. PRIOR TO PERFORMING WORK, CONTRACTOR TO COORDINATE PIPE ROUTING WITH ALL OTHER TRADES AND EXISTING FIELD CONDITIONS.
3. REFER TO MECHANICAL PLANS FOR PLUMBING SPECIFICATION OF MATERIAL, INSULATION AND INSTALLATION REQUIREMENTS.
4. CONTRACTOR IS RESPONSIBLE FOR ROUGH-IN COORDINATION AND LOCATIONS. REFER TO ARCHITECTURAL PLANS FOR LOCATIONS AND FIXTURES.
5. CONTRACTOR IS RESPONSIBLE FOR ANY REQUIRED CUTTING AND PATCHING.
6. ALL NOTCHING, BORING, AND CUTTING OF HOLES IN WALL STUDS AND FLOOR JOISTS SHALL BE PERFORMED BASED ON THE LATEST ADOPTED AND APPROVED EDITION OF THE BUILDING CODE.
7. ALL PLUMBING FIXTURES SHALL BE OF WATER CONSERVATION TYPE AS REQUIRED BY LOCAL AUTHORITY HAVING JURISDICTION.
8. ALL WATER PIPING SHALL BE INSTALLED ON INTERIOR SIDE OF THE BUILDING WALL INSULATION.
9. CONTRACTOR SHALL PROVIDE VALVES LOCATED ABOVE LAY-IN CEILING OR 24"x24" CEILING ACCESS PANEL COORDINATE FINAL LOCATION AND SIZE WITH ARCHITECT. PROVIDE BALANCING VALVES FOR HOT WATER RETURN SYSTEM AS REQUIRED.
10. ALL SANITARY DRAINAGE PIPING 3" AND SMALLER SHALL BE SLOPED AT $\frac{1}{4}$" PER FOOT. PIPING 4" AND LARGER SHALL BE SLOPED AT $\frac{1}{8}$" PER FOOT.
11. ALL CONDENSATE DRAIN PIPING SHALL BE SLOPED AT $\frac{1}{8}$" PER FOOT AND PROVIDE ACCESSIBLE CLEANOUTS AT ALL CHANGES OF DIRECTION.
12. VENTS THAT TERMINATE AT THE ROOF SHALL BE A MINIMUM OF 10' FROM ANY FRESH AIR INTAKE.
13. REFER TO THE PLUMBING DIAGRAMS FOR GUIDANCE OF INSTALLATION INTENT. CONTRACTOR IS TO PROVIDE ALL COMPONENTS NECESSARY TO MEET THE DESIGN INTENT, WHETHER SHOWN IN DIAGRAM OR NOT.

BUILDING GAS LOADS		
SERVICE	INPUT CAPACITY	PIPE SIZE
GAS WATER HEATER	200 MBH	1-1/4 INCH
BURNER	65 MBH	3/4 INCH
TOTAL	265 MBH	1 1/4 INCH

FRESNO
City of
NOT FOR CONSTRUCTION
PLAN 3
ADU-003

InnoDez

Address: Foxbrough pl
Pleasanton, CA. 94566
Phone: (424) 414-0997
Web site: www.innodez.com
Email: hello@innodez.com

CLIENT:

ADDRESS:
CITY OF FRESNO CALIFORNIA

CONFIDENTIALITY STATEMENT:

ALL DRAWINGS AND WRITTEN MATERIALS APPEARING HEREIN CONSTITUTE THE ORIGINAL AND UNPUBLISHED WORK OF THE DESIGNER AND THE SAME MAY NOT BE DUPLICATED, USED OR DISCLOSED WITHOUT CONSENT OF THE DESIGNER.

NOTES:

1. ALL DIMENSIONS HEREIN ARE IN IMPERIAL UNITS UNLESS STATED OTHERWISE.
2. THESE DRAWINGS ARE TO BE READ IN CONJUNCTION WITH ALL RELEVANT DESIGNER, ENGINEER OR SPECIALIST DRAWINGS AND SPECIFICATIONS.
3. THE CONTRACTOR MUST CHECK ALL DIMENSION AT SITE BEFORE COMMENCING WORK.
4. THE CONTRACTOR IS RESPONSIBLE FOR PROVIDING ALL NECESSARY TEMPORARY SUPPORT TO THE BUILDING AND ANY ADJACENT STRUCTURES.

REGISTERED PROFESSIONAL ENGINEER
SYED P. ALAM
NO. M 27087
EXP. 06/30/2023
MECHANICAL
STATE OF CALIFORNIA

REV. NO.	DESCRIPTION	DATE	BY
02	FOR APPROVAL	06.22	MN
01	FOR APPROVAL	03.22	MN
00	FOR APPROVAL	12.21	MN

PROJECT:
ADU PROGRAM

TITLE:
GAS LAYOUT
UNIT 3

PROJ. NO.	PROJ. ENGR.	SCALE @ 24X36
2104		1/4"=1'-0"

DRAWING NO. P1.02

REV. 2

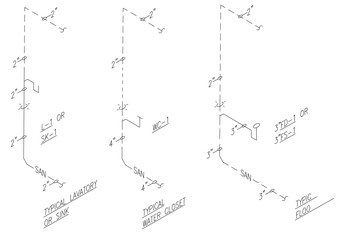

1 **TYPICAL WASTE AND VENT RISERS**
SCALE: NONE

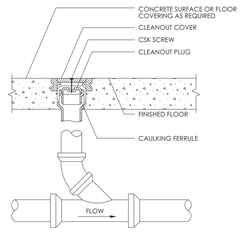

2 FLOOR CLEANOUT DETAIL
NO SCALE

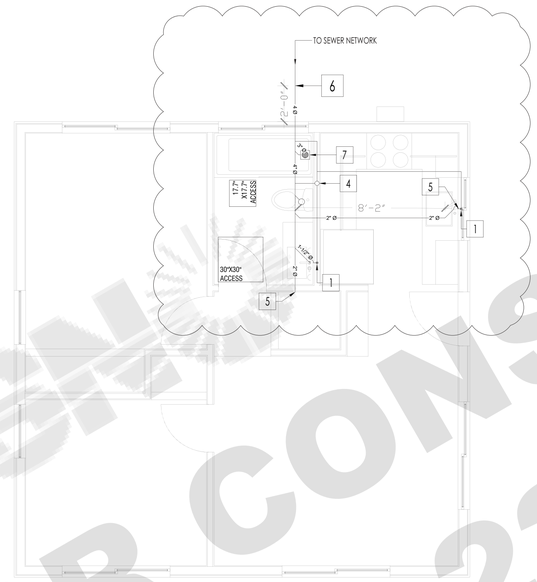

UNIT 03

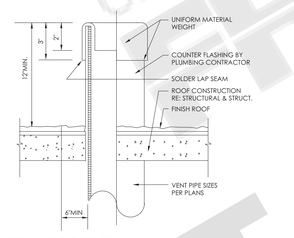

3 VENT THRU ROOF DETAIL
NO SCALE

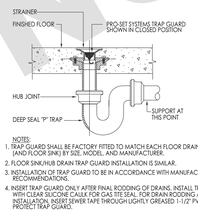

4 **FLOOR DRAIN WITH TRAP SEAL PROTECTION**
SCALE: NONE

CPC 707.4: EACH HORIZONTAL DRAINAGE PIPE SHALL BE PROVIDED WITH A CLEANOUT AT ITS UPPER TERMINAL, ADN EACH RUN OF PIPING, THAT IS MORE THAN 100 FEET IN TOTAL DEVELOPED LENGTH, SHALL BE PROVIDED WITH A CLEANOUT FOR EACH 100 FEET, OR FRACTION THEREOF, IN LENGTH OF SUCH PIPING. AN ADDITIONAL CLEANOUT SHALL BE PROVIDED IN A DRAIANGE LINE FOR EACH AGGREGATE HORIZONTAL CHANGE IN DIRECTION EXCEEDING 135 DEGREES. A CLEANOUT SHALL BE INSTALLED ABOVE THE FIXTURE CONNECTION FITTING, SERVING EACH URINAL, REGARDLESS OF THE LOCATION OF THE URINAL IN THE BUILDING.

Dia of Pipe (Inches)	MAXIMUM NUMBER OF DRAINAGE FIXTURE UNITS (dfu)			
		Stacks		
	Total for Horizontal Branch	Total Discharge into one branch interval	Total for stack of three branch Intervals or less	Total for stack greater than three branch intervals
1 1/2	3	2	4	8
2	6	6	10	24
2 1/2	12	9	20	42
3	20	20	48	72
4	160	90	240	500
5	360	200	540	1,100
6	620	350	960	1,900

FIXTURE TYPE	DRAINAGE FIXTURE UNIT VALUE AS LOAD FACTORS
LAVATORY	1
TOILET, PRIVATE	3
BATHTUB	2
LAUNDRY TRAY	2
FLOOR DRAIN 3 INCH TRAP SIZE	3
KITCHEN SINK, DOMESTIC	2

PLUMBING SHEET NOTES

SHEET NOTES:

1 – 1-1/2" WASTE DROP AND 2" VENT RISE.

2 – 2" VENT RISE TO HIGH LEVEL.

3 – 1-1/2" VENT RISE TO HIGH LEVEL.

4 – 3" VENT STACK TO ABOVE.

5 – CLEAN OUT.

6 – OUTDOOR FLOOR CLEAN-OUT. REFER TO DWG FOR PIPE SIZE.

7 – 3" FLOOR DRAIN.

8 – 4" WASTE DROP FROM FLOOR ABOVE

9 – 4" WASTE DROP TO FLOOR BELOW

10 – 3" ROOF VENT CAP

11 – 3" GAS WATER HEATER CONDENSATE DRAIN

City of FRESNO
NOT FOR CONSTRUCTION
PLAN 3
22-ADU-003

InnoDez

Address: Foxbrough pl
Pleasanton, CA. 94566
Phone: (424) 414-0997
Web site: www.innodez.com
Email: hello@innodez.com

CLIENT:

ADDRESS:
CITY OF FRESNO CALIFORNIA

CONFIDENTIALITY STATEMENT:

ALL DRAWINGS AND WRITTEN MATERIALS APPEARING HEREIN CONSTITUTE THE ORIGINAL AND UNPUBLISHED WORK OF THE DESIGNER AND THE SAME MAY NOT BE DUPLICATED, USED OR DISCLOSED WITHOUT CONSENT OF THE DESIGNER.

NOTES:

1. ALL DIMENSIONS HEREIN ARE IN IMPERIAL UNITS UNLESS STATED OTHERWISE.
2. THESE DRAWINGS ARE TO BE READ IN CONJUNCTION WITH ALL RELEVANT DESIGNER, ENGINEER OR SPECIALIST DRAWINGS AND SPECIFICATIONS.
3. THE CONTRACTOR MUST CHECK ALL DIMENSION AT SITE BEFORE COMMENCING WORK.
4. THE CONTRACTOR IS RESPONSIBLE FOR PROVIDING ALL NECESSARY TEMPORARY SUPPORT TO THE BUILDING AND ANY ADJACENT STRUCTURES.



REV. NO.	DESCRIPTION	DATE	BY
02	FOR APPROVAL	06.22	MN
01	FOR APPROVAL	03.22	MN
00	FOR APPROVAL	12.21	MN

PROJECT:
ADU PROGRAM

TITLE:
DRAINAGE LAYOUT UNIT 3

PROJ. NO.	PROJ. ENGR.	SCALE @ 24X36:
2104		1/4"=1'-0"

DRAWING NO.	REV.
P1.03	2

LIST OF SYMBOLS AND SERVICES

Symbol	Description
	WALL MOUNTED LED LIGHTING FIXTURE WITH POWER 15VA
	LIGHT FIXTURE - CEILING SURFACE (x: INDICATES CONTROL REF.) WITH POWER 50VA
F1	RECESSED MOUNTED ROUND LED LIGHTING FIXTURE SIMILAR TO PHILIPS DN130B D165 1xLED10S/840
	PENDANT LIGHT
F4	CEILING MOUNTED FAN INCLUDING LIGHTING
F2	WALL SCONCE
F3	LINEAR CABINET UNDER-MOUNT LIGHT
	OUTDOR FLOOD LIGHT IP67 WITH POWER OF 70VA
VD	SURFACE MOUNTED VACANCY DETECTOR
S	LIGHT SWITCH - WALL MOUNTED @ +48" AFF UNLESS NOTED SUBSCRIPTS: 2 = 2-POLE SWITCH 3 = 3 WAY SWITCH 4 = 4 WAY SWITCH D = DIMMER SWITCH K = KEY OPERATED SWITCH M = MOMENTARY CONTACT SWITCH P = SWITCH WITH PILOT LIGHT T = THERMAL OVERLOAD SWITCH
	120/240V, 1PH, 3W LOAD CENTER
	SINGLE RECEPTACLE - WALL MOUNTED @ +18" AFF UNLESS NOTED
	DUPLEX RECEPTACLE - WALL MOUNTED @ +18" AFF UNLESS NOTED
	QUADRUPLE RECEPTACLE - WALL MOUNTED @ +18" AFF UNLESS NOTED
J	JUNCTION BOX - WALL MOUNTED - HEIGHT AS INDICATED
J	JUNCTION BOX
YxXXA	NON-FUSED DISCONNECT SWITCH - SIZE AS INDICATED
	CONDUITS IN CEILING
	CONDUITS UNDER TILES

INSTALLATION HEIGHTS:
- h1: 23.622 inches.
- h2: 43.3071 inches.
- h3: 47.2441 inches.
- h4: 70.86 inches.
- h5: 94.48 inches.
- h6: 60 inches.

GENERAL NOTES:

1. ALL WORK AND EQUIPMENT UNDER THIS DIVISION SHALL BE IN STRICT COMPLIANCE WITH THE CODES, STANDARDS AND PRACTICES LISTED HEREIN, AND THEIR RESPECTIVE DATES ARE FURNISHED AS THE MINIMUM LATEST REQUIREMENTS.
A. LIFE SAFETY CODE
B. NATIONAL FIRE PROTECTION ASSOCIATION
C. NATIONAL ELECTRICAL CODE
D. AMERICAN NATIONAL STANDARDS INSTITUTE
E. INSTITUTE IF ELECTRICAL AND ELECTRONIC ASSOCIATION
F. NATIONAL ELECTRICAL MANUFACTURER'S ASSOCIATION (NEMA)
G. REQUIREMENTS OF LOCAL POWER COMPANY
H. BUILDING CODE
2. THE ELECTRICAL INSTALLATION SHALL MEET THE APPROVAL OF THE LOCAL GOVERNING AUTHORITIES AND THE OWNER'S REPRESENTATIVE PRIOR TO ACCEPTANCE.
3. REFER TO THE ARCHITECTURAL, MECHANICAL, PLUMBING, FIRE PROTECTION, CIVIL, INTERIOR DESIGN, FOR RELATED INFORMATION AND ADDITIONAL INSTALLATION REQUIREMENTS TO BE CONSIDERED AS PART OF THE ELECTRICAL CONTRACT DOCUMENTS.
4. IT IS NOT THE INTENT OF THESE PLANS TO SHOW EVERY MINOR DETAIL OF CONSTRUCTION THE CONTRACTOR IS EXPECTED TO FURNISH ALL ITEMS FOR A COMPLETE ELECTRICAL SYSTEM. PROVIDE EVERYTHING NECESSARY FOR EQUIPMENT TO BE PLACED IN PROPER WORKING ORDER. THE CONTRACTOR SHALL FURNISH AND INSTALL ALL MINOR ITEMS WHICH ARE OBVIOUSLY NECESSARY TO COMPLETE THE INSTALLATION.
5. LIGHT SWITCHES SHALL BE MOUNTED 48 INCHES ABOVE FINISHED FLOOR TO CENTER LINE OF THE DEVICE, UNLESS NOTED OTHERWISE. GANG SWITCHES AND DIMMER WITH A COMMON PLATE WHERE TWO (2) OR MORE ARE INDICATED ADJACENT TO EACH OTHER.
6. RECEPTACLES SHALL BE LOCATED 18" ABOVE FINISHED FLOOR TO CENTER LINE OF DEVICE. UNLESS NOTED OTHERWISE. ABOVE-COUNTER RECEPTACLES SHALL BE MOUNTED 6" ABOVE BACK SPLASH TO CENTERLINE OF DEVICE UNLESS NOTED OTHERWISE.
7. USE GALVANIZED RIGID STEEL CONDUIT WHERE EPOSED TO EXTERIOR CONDITIONS OR WHERE EXPOSED IN ANY LOCATIONS WHERE SUBJECT TO MECHANICAL DAMAGE. EMT SHALL BE PROVIDED WITH SET SCREW STEEL FITTINGS FOR INSTALLATION IN ALL CONCEALED WALLS AND CEILINGS IN DRY AREAS. ALL CONDUIT FOR LIGHTING PROTECTION SHALL BE PVC, SCHEDULE 40. UNLESS OTHERWISE NOTED, PVC MAY BE USED WHERE BURIED UNDER GRADE AND ENCASED IN CONCRETE SLAB OR WALLS. ALUMINUM CONDUIT IS NOT ALLOWED. EMT CAN BE USED IN DRY AREAS WHEN INSTALLED 10 FEET ABOVE FINISHED FLOOR LEVEL.
8. ALL CONDUITS IN PUBLIC SHALL BE CONCEALED UNLESS NOTED OTHERWISE.
9. ALL OUTDOOR LIGHTING PERMANENTLY ATTACHED TO THE RESIDENCE OR OTHER BUILDINGS ON THE SAME.
10. LOT SHALL BE CONTROLLED BY MANUAL ON AND OFF SWITCH DOES NOT OVERRIDE TO ON, AND ONE OF THE FOLLOWING AUTOMATIC TYPES: (CALIFORNIA ENERGY CODE SECTION 150 (K) (3). TYPES ARE
A. PHOTO CONTROL AND MOTION SENSOR.
B. PHOTO CONTROL AND AUTOMATIC TIME SWITCH CONTROL
C. ASTRONOMICAL TIME CLOCK THAT AUTOMATICALLY TURNS THE OUTDOOR LIGHTING OFF DURING DAYLIGHT HOURS.
D. ENERGY MANAGEMENT CONTROL SYSTEM (EMCS) THAT PROVIDES THE FUNCTIONALITY OF AN ASTRONOMICAL TIME CLOCK, DOES NOT HAVE AN OVERRIDE OR BYPASS SWITCH THAT ALLOWS THE LUMINAIRE TO BE ALWAYS ON, AND IS PROGRAMMED TO TURN THE OUTDOOR LIGHTING OFF DURING DAYLIGHTS HOUR.
E.

ALL outdoor lighting permanently attached to the residence or other buildings on the same.
lot shall be controlled by a manual ON and Off switch that does not override to ON, and one of the following automatic control types: (California Energy Code section 150. (k)(3))
a)Photocontrol and motion sensor
b)Photocontrol and automatic time switch control
c)Astronomical time clock that automatically turns the outdoor lighting off during daylight hours
d)Energy management control system (EMCS) that provides the functionality of an astronomical time clock, does not have an override or bypass switch that allows the luminaire to be always ON, and is programmed to turn the outdoor lighting off during daylight hours.

ELECTRICAL ABBREVIATIONS

AFF	ABOVE FINISHED FLOOR	HOA	HAND-OFF-AUTOMATIC	SWBD	SWITCH BOARD
AFG	ABOVE FINISHED GRADE	HP	HORSEPOWER	SQFT	SQUARE FEET
A/C	AMP INTERRUPTING CURRENT	IG	ISOLATED GROUND	TL	TWISTLOCK
AL	ALUMINUM	JBOX	JUNCTION BOX	TVSS	TRANSIENT VOLTAGE SURGE SUPPRESSION
ATS	AUTOMATIC TRANSFER SWITCH	KVA	KILOVOLT-AMPS	TVP	TYPICAL
BFG	BELOW FINISHED GRADE	KW	KILOWATT	UG	UNDERGROUND
BKBD	BACKBOARD	MCC	MOTOR CONTROL CENTER	UMC	UNIFORM MECHANICAL CODE
C	CONDUIT	MPC	MINI POWER CENTER	UON	UNLESS OTHERWISE NOTED
CU	COPPER	NC	NORMALLY CLOSED	UPS	UNINTERRUPTABLE POWER SUPPLY
DB	DISTRIBUTION BOARD	NEC	NATIONAL ELECTRIC CODE	V	VOLTS
(E)	EXISTING TO REMAIN	NF	NON-FUSED	VA	VOLT-AMPS
EA	EACH	NFPA	NATIONAL FIRE PROTECTION ASSOCIATION	V/PH/A	VOLTS/PHASE/AMPS
EM	EMERGENCY	NIC	NOT IN CONTRACT	V/PH/HZ	VOLTS/PHASE/HERTZ
EMCS	ENERGY MANAGEMENT CONTROL SYSTEM	NL	NIGHT LIGHT	VFD	CARIABLE FREQUENCY DRIVE - PROVIDED BY MECHANICAL
EWC	ELECTRIC WATER COOLER	NO	NOT TO SCALE	WP	WEATHER PROOF (NEMA 3R)
F	FUSE (DUAL ELEMENT, TIME DELAY)	PB	PULLBOX	(X)	EXISTING TO BE REMOVED
FBO	FINISHED BY OTHERS	PNL	PANEL BOARD	XFMR	TRANSFORMER
FPN	FUSE PER NAMEPLATE	(R)	EXISTING TO BE RELOCATED	XP	EXPLOSION PROOF
GFCI	GROUND FAULT CIRCUIT INTERRUPTER	RGS	RIGID GALVANIZED STEEL		
GND	GROUND				
W.P	WEATHER PROOF				

ELECTRICAL SPECIFICATIONS

1. DO NOT SCALE DRAWINGS. VERIFY DIMENSIONS IN FIELD PRIOR TO COMMENCEMENT OF WORK.
2. WHEREVER THE WORD "PROVIDE" IS USED, IT SHALL MEAN TO "PROVIDE AND INSTALL".
3. FINAL CONNECTIONS TO EQUIPMENT SHALL BE PER MANUFACTURER'S APPROVED WIRING DIAGRAMS, DETAILS AND INSTRUCTIONS. IT SHALL BE THE CONTRACTOR'S RESPONSIBILITY TO PROVIDE MATERIALS AND EQUIPMENT COMPATIBLE WITH EQUIPMENT ACTUALLY SUPPLIED.
4. IT IS THE INTENT OF THESE DRAWINGS AND SPECIFICATIONS TO ESTABLISH A STANDARD OF QUALITY. THE ENGINEER RESERVES THE RIGHT TO APPROVE METHODS AND MATERIALS NOT REFLECTED HEREIN.
5. CONTRACTOR SHALL REVIEW ARCHITECTURAL, STRUCTURAL, MECHANICAL, AND OTHER RELATED DRAWINGS PRIOR TO BID.
6. CONTRACTOR SHALL VISIT SITE PRIOR TO BID AND VERIFY THAT CONDITIONS ARE AS INDICATED IN THE CONTRACT DOCUMENTS. CONTRACTOR SHALL INCLUDE IN HIS BID, ANY COSTS REQUIRED TO MAKE HIS WORK MEET THE CONTRACT SCOPE UTILIZING EXISTING CONDITIONS.
7. WORK SHALL BE PERFORMED IN A WORKMANLIKE MANNER TO THE SATISFACTION OF THE ARCHITECT.
8. WORK, MATERIALS AND EQUIPMENT SHALL CONFORM TO THE LATEST EDITIONS OF LOCAL, STATE AND NATIONAL CODES AND ORDINANCES.
9. PROVIDE PERMITS AND INSPECTIONS REQUIRED.
10. GUARANTEE THE INSTALLATION AGAINST DEFECTS IN MATERIALS AND WORKMANSHIP WHICH MAY OCCUR UNDER NORMAL USAGE FOR A PERIOD OF ONE YEAR AFTER OWNER'S ACCEPTANCE, DEFECTS SHALL BE PROMPTLY REMEDIED WITHOUT COST TO THE OWNER.
11. PROVIDE RECORD DRAWINGS TO ENGINEER. DRAWINGS SHALL INCLUDE ALL ADDENDUM ITEMS, CHANGE ORDERS, ALTERATIONS, REROUTINGS, ETC.
12. VERIFY SPECIFIC LOCATION OF EQUIPMENT TO BE FURNISHED BY OTHERS PRIOR TO ROUGH-IN.
13. ELECTRICAL SYSTEMS SHALL BE TESTED FOR PROPER OPERATION. IF TESTS SHOW THAT WORK IS DEFECTIVE, CONTRACTOR SHALL MAKE CORRECTIONS NECESSARY AT NO COST TO OWNER.
14. RECESSED LIGHT FIXTURES INSTALLED IN GYP. BOARD OR PLASTER CEILINGS SHALL HAVE PLASTER FRAMES INSTALLED PRIOR TO CEILING MATERIAL.
15. RECESSED FIXTURES INSTALLED INDOORS SHALL BE THERMALLY PROTECTED.
16. SEE DIVISION 15 DRAWINGS FOR LOCATION OF MECHANICAL EQUIPMENT. PROVIDE SERVICE TO AND CONNECT EQUIPMENT AS REQUIRED.
17. PROVIDE EQUIPMENT GROUNDING CONDUCTOR IN ALL CONDUITS.
18. ALL ELECTRICAL SYSTEMS COMPONENTS SHALL BE LISTED OR LABELED BY U.L. OR OTHER RECOGNIZED TESTING FACILITY.
19. WIRE TERMINATION PROVISIONS FOR PANELBOARDS, CIRCUIT BREAKERS, SAFETY SWITCHES, AND ALL OTHER ELECTRICAL APPARATUS SHALL BE LISTED AS SUITABLE FOR 75 DEGREE C.
20. THE FOLLOWING CONDUCTOR SIZES SHALL BE UTILIZED FOR 20 AMP CIRCUITS PERTAINING TO DISTANCES (IN FEET) INDICATED:

120VOLT, 1PH	CONDUCTOR	240 VOLT, (1PH)
0-64	#12AWG	0-129
65--106	#10AWG	130-212
107-160	#8AWG	213-321

NOTE: BASED ON 75°c COPPER CONDUCTORS INSTALLED IN EMT WITH 16AMP LOAD @ 85% P.F.

21. CONTRACTOR SHALL REVIEW ARCHITECTURAL, STRUCTURAL AND MECHANICAL DRAWINGS AND SHALL PROVIDE LIGHTS, SWITCHES, RECEPTACLES, EQUIPMENT CONNECTIONS, ETC., AND ASSOCIATED CIRCUITING IN NEW AND REMODELED AREAS, EVEN IF SUCH AREAS ARE NOT SHOWN ON ELECTRICAL DRAWINGS. LAYOUTS, FIXTURE TYPES, QUANTITIES AND SPACING SHALL BE IN ACCORDANCE WITH SIMILAR AREAS ON THIS PROJECT. CONTRACTOR SHALL INCLUDE COSTS FOR THE ABOVE IN HIS BID. IN ADDITION, CONTRACTOR SHALL PROVIDE LAYOUT DRAWINGS FOR WORK IN SUCH AREAS AND SUBMIT FOR APPROVAL PRIOR TO ROUGH-IN.
22. WIRE SHALL BE COPPER, 75 DEGREES C RATED FOR GENERAL USE, FOR WIRING WITHIN 3 INCHES OF FLUORESCENT BALLASTS WIRE SHALL BE COPPER, MINIMUM 90 DEGREES C RATED. SIZES INDICATED ARE FOR INSTALLATION IN A MAXIMUM 30 DEGREES C AMBIENT. CONDUCTOR AMPACITY SHALL BE DERATED FOR HIGHER AMBIENT INSTALLATIONS. 600 VOLT COMPACT ALUMINUM WIRE AND CABLE IN SIZES 1/0 AND LARGER MAY BE SUBSTITUTED FOR COPPER ON SERVICES AND FEEDERS IF AMPACITY IS EQUIVALENT TO OR GREATER
23. CONTRACTOR SHALL BE RESPONSIBLE FOR REPLACING EQUIPMENT WHICH IS DAMAGED DUE TO INCORRECT FIELD WIRING PROVIDED UNDER THIS SECTION OR FACTORY WIRING IN EQUIPMENT PROVIDED UNDER THIS SECTION.
24. CONTRACTOR'S FAILURE TO ORDER OR RELEASE ORDER FOR MATERIALS AND/OR EQUIPMENT WILL NOT BE ACCEPTED AS A REASON TO SUBSTITUTE ALTERNATE MATERIALS, EQUIPMENT OR INSTALLATION METHODS.
25. ELECTRICAL SYSTEMS SHALL BE COMPLETE, OPERABLE AND READY FOR CONTINUOUS OPERATION AT COMPLETION OF PROJECT.
26. RECEPTACLES WHICH ARE SHOWN WALL MOUNTED ON THE ELECTRICAL DRAWINGS ON WALLS WHICH, ON THE ARCHITECTURAL DRAWINGS AND ELEVATIONS ARE SHOWN AS GLASS OR PARTITIONS, SHALL BE FLUSH FLOOR DUPLEX RECEPTACLES MOUNTED ADJACENT TO BAS OR WALLS.
27. RECEPTACLES AT COUNTER SHALL BE MOUNTED WITH THEIR LONG AXIS HORIZONTAL AT +46" UNLESS NOTED.
28. FLUSH FLOOR RECEPTACLE OUTLETS SHALL BE WIREMOLD 862 SERIES. PROVIDE CARPET OR TILE FLANGE TO MATCH FLOOR FINISH.
29. THE COLOR OF THE DEVICES AND COVER PLATES SHALL BE AS DIRECTED BY ARCHITECT. IN DAMP OR WET LOCATIONS COVER PLATES SHALL BE STAINLESS STEEL. IN DRY LOCATIONS COVER PLATES SHALL BE SMOOTH HIGH ABUSE NYLON OR EQUIVALENT. PROVIDE COVER PLATES FOR SWITCHES, RECEPTACLES, TELEPHONE, TELEVISION, COMPUTER AND J-BOX OUTLETS AS REQUIRED.
30. ROMEX CABLE WITH A GROUNDING CONDUCTOR MAY BE USED WHERE PERMITTED BY BOTH THE N.E.C. AND LOCAL ORDINANCES.
31. DISCONNECT SWITCHES SHALL BE GENERAL DUTY TYPE. FUSIBLE SWITCHES SHALL ACCEPT CLASS 'R' FUSES ONLY AND REJECT ALL OTHERS.
32. FINAL CONNECTIONS TO VIBRATING EQUIPMENT SHALL BE WITH FLEX (LIQUIDTIGHT FOR EXTERIOR APPLICATIONS) AND APPROVED FITTINGS. DO NOT SECURE CONDUITS, DISCONNECTS OR DEVICES TO DUCTWORK OR MECHANICAL EQUIPMENT.
33. THE ENGINEER OF RECORD HAS PERFORMED SHORT CIRCUIT CALCULATIONS AND THE AIC RATINGS INDICATED FOR EACH DEVICE IS ADEQUATE TO PROTECT THE EQUIPMENT AND THE ELECTRICAL SYSTEM.
34. THE ENGINEER OF RECORD HAS PERFORMED VOLTAGE DROP CALCULATIONS AND ALL BRANCH CIRCUITS AND FEEDERS COMPLY WITH NEC 210-19(A) FPN NO4.
35. THE CONTRACTOR SHALL PROVIDE 120V CONNECTION TO NEAREST MAINTENANCE RECEPTACLE WHERE REQUIRED FOR CONDENSATE PUMPS ASSOCIATED WITH FAN COIL UNITS. COORDINATE WITH MECHANICAL CONTRACTOR.
36. THE CONTRACTOR SHALL COORDINATE THE SPECIFIC LOCATION, MOUNTING HEIGHT, ROTATION, TYPE, COLOR, ETC. OF ALL DEVICES PRIOR TO INSTALLATION.
37. CONNECTIONS TO HYDROMASSAGE BATHTUBS, JACCUZZI TUBS OR SIMILAR EQUIPMENT SHALL BE MADE IN ACCORDANCE WITH ARTICLE 680.70 OF THE CEC 2019. PROVIDE BONDING AS REQUIRED BY ARTICLE 680.74 OF THE CEC 2019.
38. ALL INDOOR FLUORESCENT FIXTURES THAT UTILIZE DOUBLE-ENDED LAMPS AND CONTAIN BALLAST(S) THAT CAN BE SERVICED IN PLACE OR BALLASTED LUMINARIES THAT ARE SUPPLIED FROM MULTIWIRE BRANCH CIRCUITS AND CONTAIN BALLAST(S) THAT CAN BE SERVICED IN PLACE SHALL COMPLY WITH 410.73 (G) OF THE CEC 2019.
39. CEILING MOUNTED SMOKE AND CARBON MONOXIDE DETECTORS MUST COMPLY WITH U.L. 2075 AND SHALL BE INSTALLED IN ACCORDANCE WITH THE MANUFACTURERS SPECIFICATIONS.
40. ALL SMOKE DETECTORS AND COMBINATION SMOKE/CARBON MONOXIDE DETECTORS SHALL BE HARDWIRED ON SAME CIRCUIT AND HAVE A BATTERY BACKUP SYSTEM.
41. WHEN MORE THAN EITHER ONE (1) SMOKE ALARM OR MORE THAN ONE (1) CARBON MONOXIDE ALARM IS REQUIRED TO BE INSTALLED WITHIN AN INDIVIDUAL DWELLING UNIT, ALL ALARM DEVICES SHALL BE INTERCONNECTED IN SUCH A MANNER THAT THE ACTUATION OF ONE ALARM WITH ACTIVATE ALL OF THE ALARMS IN THE INDIVIDUAL UNIT. SMOKE AND CARBON MONOXIDE ALARMS SHALL BE INSTALLED IN THE FOLLOWING LOCATIONS.
    A. SMOKE ALARMS IN EACH SLEEPING ROOM.
    B. SMOKE ALARMS OUTSIDE OF EACH SEPARATE SLEEPING AREA IN THE IMMEDIATE VICINITY OF THE BEDROOMS.
    C. SMOKE ALARMS ON EACH ADDITIONAL STORY OF THE DWELLING INCLUDING BASEMENTS BUT NOT INCLUDING CRAWL SPACE AND UNINHABITABLE ATTICS. IN DWELLINGS OR DWELLING UNITS WITH SPLIT LEVELS AND WITHOUT AN INTERVENING DOOR BETWEEN THE ADJACENT LEVELS, A SMOKE ALARM INSTALLED ON THE UPPER LEVEL SHALL SUFFICE FOR THE ADJACENT LOWER LEVEL PROVIDED THAT THE LOWER LEVEL IS LESS THAN ONE FULL STORY BELOW THE UPPER LEVEL..
    D. CARBON MONOXIDE ALARMS OUTSIDE OF SLEEPING AREAS IN THE IMMEDIATE VICINITY OF THE BEDROOMS IN DWELLING UNITS WITHIN WHICH FUEL-FIRED APPLIANCES ARE INSTALLED AND IN DWELLING UNITS THAT HAVE ATTACHED GARAGES.
    E. CARBON MONOXIDE ALARMS WITHIN EACH BEDROOM WHICH CONTAINS A FUEL-FIRED APPLIANCE.

43. ALL BRANCH CIRCUITS THAT SUPPLY 125-VOLT, SINGLE PHASE, 15 AND 20 AMP BRANCH CIRCUITS SUPPLYING OUTLETS INSTALLED IN DWELLING UNIT FAMILY ROOMS, DINING ROOMS, LIVING ROOMS, PARLORS, LIBRARIES, DENS, BEDROOMS, SUNROOMS, RECREATION ROOMS, CLOSETS, HALLWAYS, OR SIMILAR ROOMS OR AREAS SHALL BE PROTECTED BY A LISTED ARC-FAULT CIRCUIT INTERRUPTER, COMBINATION-TYPE, INSTALLED TO PROVIDE PROTECTION OF THE BRANCH CIRCUIT. CEC 2019 ARTICLE 210.12 (A).

44. ALL ATTIC ACCESSES SHALL BE PROVIDED WITH A SWITCHED LIGHT AND 120 VOLT GFI OUTLET AT OR NEAR THE FORCED AIR UNIT. LOCATE LIGHT SWITCH AT THE ATTIC ACCESS OPENING.
45. ALL RECESSED LED STRIP LIGHTING SALL BE BY KLUS.
46. Receptacles inside kitchen shall comply with following:

a) Receptacle outlets shall not be installed in a face up position in the work surfaces.
b) Receptacle outlets shall be located on or above, but not more than 20 in. above the countertop or work surface. (CEC section 210.52(C)(5))
c) Receptacle outlets shall be permitted to be mounted not more than 12 in. below the countertop or worksurface provided the countertop does not extend more than 6 in. beyond its support base. (CEC section 210.52(C)(5) Exception)

47. Energy management control system (EMCS) that provides the functionality of an astronomical time clock, does not have an override or bypass switch that allows the luminaire to be always ON, and is programmed to turn the outdoor lighting off during daylight hours.

City of FRESNO
NOT FOR CONSTRUCTION
22-TADU-003
PLAN 3

InnoDez

Address: Foxbrough pl Pleasanton, CA. 94566
Phone: (424) 414-0997
Web site: www.innodez.com
Email: hello@innodez.com

CLIENT:

ADDRESS:
CITY OF FRESNO CALIFORNIA

CONFIDENTIALITY STATEMENT:

ALL DRAWINGS AND WRITTEN MATERIALS APPEARING HEREIN CONSTITUTE THE ORIGINAL AND UNPUBLISHED WORK OF THE DESIGNER AND THE SAME MAY NOT BE DUPLICATED, USED OR DISCLOSED WITHOUT CONSENT OF THE DESIGNER.

NOTES:

1. ALL DIMENSIONS HEREIN ARE IN IMPERIAL UNITS UNLESS STATED OTHERWISE.
2. THESE DRAWINGS ARE TO BE READ IN CONJUNCTION WITH ALL RELEVANT DESIGNER, ENGINEER OR SPECIALIST DRAWINGS AND SPECIFICATIONS.
3. THE CONTRACTOR MUST CHECK ALL DIMENSION AT SITE BEFORE COMMENCING WORK.
4. THE CONTRACTOR IS RESPONSIBLE FOR PROVIDING ALL NECESSARY TEMPORARY SUPPORT TO THE BUILDING AND ANY ADJACENT STRUCTURES.

REGISTERED PROFESSIONAL ENGINEER
SYED P. ALAM
NO. M 27087
EXP. 06/30/2023
MECHANICAL
STATE OF CALIFORNIA

REV. NO.	DESCRIPTION	DATE	BY
02	FOR APPROVAL	06.22	MN
01	FOR APPROVAL	03.22	MN
00	FOR APPROVAL	12.21	MN

PROJECT: **ADU PROGRAM**

TITLE: ELECTRICAL SPECS, LEGENDS & SYMBOLS

PROJ. NO.	PROJ. ENGR.	SCALE @ 24X36:
2104		NTS

DRAWING NO.	REV.
E - 0 . 0 0	2

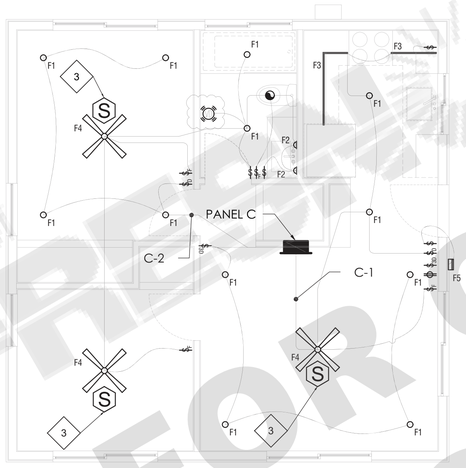

UNIT 03

SHEET NOTES:

1. PROVIDE HEAVY DUTY JUNCTION BOX, FLUSH IN CEILING SECURED TO STRUCTURE
2. FURNISH AND INSTALL DOOR SWITCH TO ACTIVATE LIGHT WHEN DOOR IS OPENED EQUAL TO CARTER-HOFFMANN #18602-0013
3. FURNISH AND INSTALL SMOKE OR COMBINATION SMOKE AND CARBON MONOXIDE DETECTOR AS REQUIRED. INTERLOCK WITH OTHER DETECTORS

GENERAL NOTES

1. REFER TO FIXTURE SCHEDULE/LEGEND FOR ADDITIONAL INFORMATION ON LIGHT FIXTURES
2. NON LOW VOLTAGE SWITCHES SHALL BE DECORA TYPE WITH SLIDE DIMMER. SWITCHES AND PLATE COLORS SHALL BE WHITE.
3. OUTLET BOXES OR OUTLET BOX SYSTEM USED AS SOLE SUPPORT OF A CEILING SUSPENDED PADDLE FAN SHALL BE LISTED, SHALL BE MARKED BY THEIR MANUFACTURER AS SUITABLE FOR THIS PURPOSE. AND SHALL NOT SUPPORT CEILING-SUSPENDED (PADDLE) FANS THAT WEIGHT MORE THAN 70lb. FOR OUTLET BOXES OUR OUTLET BOX SYSTEM DESIGNED TO SUPPORT CEILING-SUSPENDED (PADDLE) FANS THAT WEIGHT MORE THAN 35 lb. THE REQUIRED MARKING SHALL ICLUDE THE MAXIMUM WEIGHT TO BE SUPPORTED. (CEC 2019 ARTICLE 314.27 (C))
4. IUMINAIRES IN CLOTHES CLOSETS SHALL BE INSTALLED IN ACCORDANCE WITH CEC 2019 ARTICLE 410.16
5. ALL permanently installed lighting fixtures shall be high-efficacy luminaires in accordance with Table 150.0-A of California Energy Code. Provide a complete luminaire schedule on the Electrical plans for all lighting, which specifies luminaire/fixture type and type of lamps for each luminaire/fixture. (CEC 2019 section 150.0(k)(1)(A))
6. ALL 120 VOLTE, SINGL PHASE 15 AND 20 AMPERE BRANCH CIRCUIT SUPPLYINH OUTLETS INSTALLED IN DWELLING UNIT FAMILY ROOMS, DINING ROOMS, LIVING ROOMS, PARLORS, LIBRARIES, DENS, BEDROOMS, SUNROOMS, RECREATION ROOMS, CLOSETS, HALLWAYS, OR SIMILAR AREAS SHALL BE PROTECTED BY A LISTED ARC-FAULT CIRCUIT INTERRUPTER, COMBINATION TYPE INSTALLED TO PROVIDE PROTECTION OF THE BRANCH CIRCUIT. (CEC 2019 ARTICLE 210.12(A))

City of Fresno
FREE CONSTRUCTION
NOT FOR CONSTRUCTION
PLAN 3 22-TADU-003

InnoDez

Address: Foxbrough pl
Pleasanton, CA. 94566
Phone: (424) 414-0997
Web site: www.innodez.com
Email: hello@innodez.com

CLIENT:

ADDRESS:

CITY OF FRESNO CALIFORNIA

CONFIDENTIALITY STATEMENT:

ALL DRAWINGS AND WRITTEN MATERIALS APPEARING HEREIN CONSTITUTE THE ORIGINAL AND UNPUBLISHED WORK OF THE DESIGNER AND THE SAME MAY NOT BE DUPLICATED, USED OR DISCLOSED WITHOUT CONSENT OF THE DESIGNER.

NOTES:

1. ALL DIMENSIONS HEREIN ARE IN IMPERIAL UNITS UNLESS STATED OTHERWISE.
2. THESE DRAWINGS ARE TO BE READ IN CONJUNCTION WITH ALL RELEVANT DESIGNER, ENGINEER OR SPECIALIST DRAWINGS AND SPECIFICATIONS.
3. THE CONTRACTOR MUST CHECK ALL DIMENSION AT SITE BEFORE COMMENCING WORK.
4. THE CONTRACTOR IS RESPONSIBLE FOR PROVIDING ALL NECESSARY TEMPORARY SUPPORT TO THE BUILDING AND ANY ADJACENT STRUCTURES.

REGISTERED PROFESSIONAL ENGINEER
SYED P. ALAM
NO. M 27087
EXP. 06/30/2023
MECHANICAL
STATE OF CALIFORNIA

REV. NO.	DESCRIPTION	DATE	BY
02	FOR APPROVAL	06.22	MN
01	FOR APPROVAL	03.22	MN
00	FOR APPROVAL	12.21	MN

PROJECT: **ADU PROGRAM**

TITLE: LIGHTING LAYOUT UNIT 3

PROJ. NO.	PROJ. ENGR.	SCALE @ 24X36:
2104		1/4"=1'-0"

DRAWING NO.	REV.
E - 1 . 0 1	2

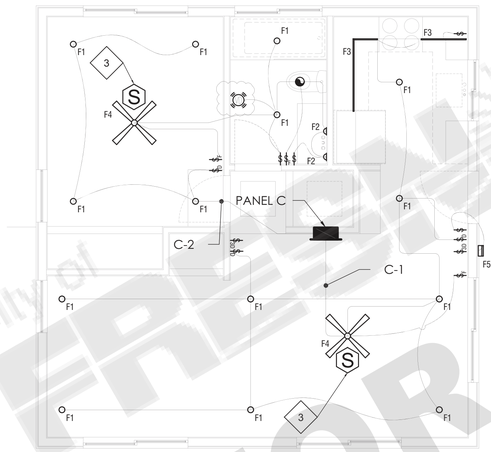

UNIT 03 ALTERNATIVE

SHEET NOTES:

1. PROVIDE HEAVY DUTY JUNCTION BOX, FLUSH IN CEILING SECURED TO STRUCTURE
2. FURNISH AND INSTALL DOOR SWITCH TO ACTIVATE LIGHT WHEN DOOR IS OPENED EQUAL TO CARTER-HOFFMANN #18602-0013
3. FURNISH AND INSTALL SMOKE OR COMBINATION SMOKE AND CARBON MONOXIDE DETECTOR AS REQUIRED. INTERLOCK WITH OTHER DETECTORS

GENERAL NOTES

1. REFER TO FIXTURE SCHEDULE/LEGEND FOR ADDITIONAL INFORMATION ON LIGHT FIXTURES
2. NON LOW VOLTAGE SWITCHES SHALL BE DECORA TYPE WITH SLIDE DIMMER. SWITCHES AND PLATE COLORS SHALL BE WHITE.
3. OUTLET BOXES OR OUTLET BOX SYSTEM USED AS SOLE SUPPORT OF A CEILING SUSPENDED PADDLE FAN SHALL BE LISTED, SHALL BE MARKED BY THEIR MANUFACTURER AS SUITABLE FOR THIS PURPOSE. AND SHALL NOT SUPPORT CEILING-SUSPENDED (PADDLE) FANS THAT WEIGHT MORE THAN 70lb. FOR OUTLET BOXES OUR OUTLET BOX SYSTEM DESIGNED TO SUPPORT CEILING-SUSPENDED (PADDLE) FANS THAT WEIGHT MORE THAN 35 lb. THE REQUIRED MARKING SHALL ICLUDE THE MAXIMUM WEIGHT TO BE SUPPORTED. (CEC 2019 ARTICLE 314.27 (C))
4. IUMINAIRES IN CLOTHES CLOSETS SHALL BE INSTALLED IN ACCORDANCE WITH CEC 2019 ARTICLE 410.16
5. ALL permanently installed lighting fixtures shall be high-efficacy luminaires in accordance with Table 150.0-A of California Energy Code. Provide a complete luminaire schedule on the Electrical plans for all lighting, which specifies luminaire/fixture type and type of lamps for each luminaire/fixture. (CEC 2019 section 150.0(k)(1)(A))
6. ALL 120 VOLTE, SINGL PHASE 15 AND 20 AMPERE BRANCH CIRCUIT SUPPLYINH OUTLETS INSTALLED IN DWELLING UNIT FAMILY ROOMS, DINING ROOMS, LIVING ROOMS, PARLORS, LIBRARIES, DENS, BEDROOMS, SUNROOMS, RECREATION ROOMS, CLOSETS, HALLWAYS, OR SIMILAR AREAS SHALL BE PROTECTED BY A LISTED ARC-FAULT CIRCUIT INTERRUPTER, COMBINATION TYPE INSTALLED TO PROVIDE PROTECTION OF THE BRANCH CIRCUIT. (CEC 2019 ARTICLE 210.12(A))

NOT FOR CONSTRUCTION
PLAN 3 ADU-003
FREMONT
City Approval

InnoDez

Address: Foxbrough pl
Pleasanton, CA. 94566
Phone: (424) 414-0997
Web site: www.innodez.com
Email: hello@innodez.com

CLIENT:

ADDRESS:
CITY OF FRESNO CALIFORNIA

CONFIDENTIALITY STATEMENT:

ALL DRAWINGS AND WRITTEN MATERIALS APPEARING HEREIN CONSTITUTE THE ORIGINAL AND UNPUBLISHED WORK OF THE DESIGNER AND THE SAME MAY NOT BE DUPLICATED, USED OR DISCLOSED WITHOUT CONSENT OF THE DESIGNER.

NOTES:

1. ALL DIMENSIONS HEREIN ARE IN IMPERIAL UNITS UNLESS STATED OTHERWISE.
2. THESE DRAWINGS ARE TO BE READ IN CONJUNCTION WITH ALL RELEVANT DESIGNER, ENGINEER OR SPECIALIST DRAWINGS AND SPECIFICATIONS.
3. THE CONTRACTOR MUST CHECK ALL DIMENSION AT SITE BEFORE COMMENCING WORK.
4. THE CONTRACTOR IS RESPONSIBLE FOR PROVIDING ALL NECESSARY TEMPORARY SUPPORT TO THE BUILDING AND ANY ADJACENT STRUCTURES.

REGISTERED PROFESSIONAL ENGINEER
SYED P. ALAM
NO. M 27087
EXP. 06/30/2023
MECHANICAL
STATE OF CALIFORNIA

REV. NO.	DESCRIPTION	DATE	BY
02	FOR APPROVAL	06.22	MN
01	FOR APPROVAL	03.22	MN
00	FOR APPROVAL	12.21	MN

PROJECT: **ADU PROGRAM**

TITLE: LIGHTING LAYOUT
UNIT 3 ALTERNATIVE

PROJ. NO.	PROJ. ENGR.	SCALE @ 24X36:
2104		1/4"=1'-0"

DRAWING NO. E - 1 . 0 1 .2

REV. 2

SHEET NOTES:

3 — ROUTE CABLING FOR AUTOMATIC GARAGE DOOR SENSORS AND PUSH BUTTON

5 — DISCONNECT SWITCH FOR INDOOR UNIT

6 — JUNCTION BOX FOR HEAT PUMP WATER HEATER

7 — JUNCTION BOX FOR EXHAUST FAN

8 — DISCONNECT SWITCH FOR OUTDOOR UNIT

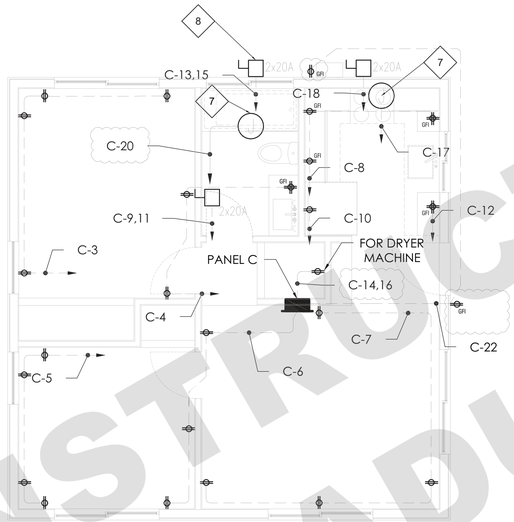

UNIT 03

GENERAL NOTES

1. ALL 120 VOLTE, SINGL PHASE 15 AND 20 AMPERE BRANCH CIRCUIT SUPPLYINH OUTLETS INSTALLED IN DWELLING UNIT FAMILY ROOMS, DINING ROOMS, LIVING ROOMS, PARLORS, LIBRARIES, DENS, BEDROOMS, SUNROOMS, RECREATION ROOMS, CLOSETS, HALLWAYS, OR SIMILAR AREAS SHALL BE PROTECTED BY A LISTED ARC-FAULT CIRCUIT INTERRUPTER, COMBINATION TYPE INSTALLED TO PROVIDE PROTECTION OF THE BRANCH CIRCUIT. (CEC 2019 ARTICLE 210.12(A))

2. IN EVERY KITCHEN, FAMILY ROOM, DINING ROOM, LIVING ROOM, PARLOR, LIBRARY, DEN, SUNROOM, BEDROOM, RECREATION ROOM OR SIMILAR ROOM OR AREA OF DWELLING UNITS RECEPTACLE OUTLETS SHALL BE INSTALLED IN ACCORDANCE WITH THE GENERAL PROVISIONS SPECIFIED IN THE FOLLOWING ARTICLES.
   a. CEC 2019 ARTICLE 210.52(A) (1) SPACING. RECEPTACLES SHALL BE INSTALLED SI THAT NO POINT ALONG THE FLOOR LINE OF THE WALL IS MORE THAN 6-FEET FROM A RECEPTACLE.
   b. CEC 2019 article 210.52(a) (2) AS AMENDED WALL SPACE. ANY WALL 24-INCHES OR MORE IN LENGTH SHALL BE PROVIDED WITH A RECEPTACLE OUTLET. WALL SPACE SHALL INCLUDE AROUND CORNERS, THE FIRST SLIDING PANEL OF A SLIDING DOOR, FIXED ROOM DEVIDERS SUCH AS A FREESTANDING BAR TYPE COUNTER. WALL SPACE NED NOT INCLUDE THE SPACE BEHIND OPERABLE DOORS. AND NEED NOT INCLUDE ENTRIES, HALLWAYS ETC. LESS THAN 5-FEET WIDE LOCATED IN BEDROOMS.
   c. CEC ARTICLE 210.52(A) (3) AS AMENDED FLOOR RECEPTACLES.

3. IN EVERY KITCHEN, FAMILY ROOM, DINING ROOM, LIVING ROOM, PARLOR, LIBRARY, DEN, SUNROOM, BEDROOM, RECREATION ROOM OR SIMILAR ROOM OR AREA OF DWELLING UNITS, ALL 125 VOLT 15 AND 20 AMP RECEPTACLES SHALL BE LISTED TAMPER-RESISTANT RECEPTACLES CEC 2019 406.12)

Branch Panel: ADU UNIT 03 PANEL C
Location: ADU ENTRANCE | **Volts: 120/208** | **A.I.C Rating: 36kA**
Supply From: UTILITY METER | **Phases: 3** | **Mains Type: MCCB**
Mounting: Recessed | **Wires: 3+1** | **Mains Rating: 50A**
Enclosure Type 1

DESCRIPTION	VA	TRIP AMPS	A	B	C	TRIP AMPS	VA	DESCRIPTION
Lighting Living Room	370	15	1		2	15	220	Lighting Bed Room
Sockets Bed Room	1080	20	3		4	20	1080	Sockets Bed Room
Sockets Bed Room	1080	20	5		6	20	1080	Sockets Bed Room
Sockets Living Room	1080	20	7		8	20	810	Sockets Kitchen
Indoor Unit	629.72	20	9		10	20	1000	Power Socket
	629.72		11		12	20	1000	Power Socket
Outdoor Unit	2123.06	20	13		14	20	500	Dryer Machine
	2123.06		15		16	20	500	
Kitchen Hood	20	20	17		18	20	180	Gaz Water Heater Pump
Spare		20	19		20	20	30	Toilet Exhaust Fan
Spare		20	21		22	20	540	Sockets Outdoor
Space			23		24	20		Spare
Space			25		26	20		Spare
Space			27		28			Space
Space			29		30			Space

TOTAL (A):	5133.06	VA
TOTAL (B):	6952.78	VA
TOTAL (C):	3989.72	VA
TOTAL	16075.6	VA

Mains Rating 50A

	LIGHT	Mech.	SOCKET	Kitchen	TOTAL
CONNECTED	590	5715.552	6750	3020	16075.55
DEMAND FACTOR	1	0.3	0.5	0.6	
DEMAND LOAD	590	1714.6656	3375	1812	7491.666

NOT FOR CONSTRUCTION
PLANS
CITY OF FRESNO
BUILDING & SAFETY
APPROVED
02-17-2023
PERMIT NO. ADU-003

InnoDez

Address: Foxbrough pl
Pleasanton, CA. 94566
Phone: (424) 414-0997
Web site: www.innodez.com
Email: hello@innodez.com

CLIENT:

ADDRESS:
CITY OF FRESNO CALIFORNIA

CONFIDENTIALITY STATEMENT:

ALL DRAWINGS AND WRITTEN MATERIALS APPEARING HEREIN CONSTITUTE THE ORIGINAL AND UNPUBLISHED WORK OF THE DESIGNER AND THE SAME MAY NOT BE DUPLICATED, USED OR DISCLOSED WITHOUT CONSENT OF THE DESIGNER.

NOTES:

1. ALL DIMENSIONS HEREIN ARE IN IMPERIAL UNITS UNLESS STATED OTHERWISE.
2. THESE DRAWINGS ARE TO BE READ IN CONJUNCTION WITH ALL RELEVANT DESIGNER, ENGINEER OR SPECIALIST DRAWINGS AND SPECIFICATIONS.
3. THE CONTRACTOR MUST CHECK ALL DIMENSION AT SITE BEFORE COMMENCING WORK.
4. THE CONTRACTOR IS RESPONSIBLE FOR PROVIDING ALL NECESSARY TEMPORARY SUPPORT TO THE BUILDING AND ANY ADJACENT STRUCTURES.

REGISTERED PROFESSIONAL ENGINEER
SYED P. ALAM
NO. M 27087
EXP. 06/30/2023
MECHANICAL
STATE OF CALIFORNIA

REV. NO.	DESCRIPTION	DATE	BY
02	FOR APPROVAL	06.22	MN
01	FOR APPROVAL	03.22	MN
00	FOR APPROVAL	12.21	MN

PROJECT:
ADU PROGRAM

TITLE:
POWER LAYOUT
UNIT 3

PROJ. NO.	PROJ. ENGR.	SCALE @ 24X36:
2104		1/4"=1'-0"

DRAWING NO.: E - 2 . 0 1
REV.: 2

SHEET NOTES:

3 → ROUTE CABLING FOR AUTOMATIC GARAGE DOOR SENSORS AND PUSH BUTTON

5 → DISCONNECT SWITCH FOR INDOOR UNIT

6 → JUNCTION BOX FOR HEAT PUMP WATER HEATER

7 → JUNCTION BOX FOR EXHAUST FAN

8 → DISCONNECT SWITCH FOR OUTDOOR UNIT

GENERAL NOTES

1. ALL 120 VOLTE, SINGL PHASE 15 AND 20 AMPERE BRANCH CIRCUIT SUPPLYINH OUTLETS INSTALLED IN DWELLING UNIT FAMILY ROOMS, DINING ROOMS, LIVING ROOMS, PARLORS, LIBRARIES, DENS, BEDROOMS, SUNROOMS, RECREATION ROOMS, CLOSETS, HALLWAYS, OR SIMILAR AREAS SHALL BE PROTECTED BY A LISTED ARC-FAULT CIRCUIT INTERRUPTER, COMBINATION TYPE INSTALLED TO PROVIDE PROTECTION OF THE BRANCH CIRCUIT. (CEC 2019 ARTICLE 210.12(A))
2. IN EVERY KITCHEN, FAMILY ROOM, DINING ROOM, LIVING ROOM, PARLOR, LIBRARY, DEN, SUNROOM, BEDROOM, RECREATION ROOM OR SIMILAR ROOM OR AREA OF DWELLING UNITS RECEPTACLE OUTLETS SHALL BE INSTALLED IN ACCORDANCE WITH THE GENERAL PROVISIONS SPECIFIED IN THE FOLLOWING ARTICLES.

a. CEC 2019 ARTICLE 210.52(A) (1) SPACING. RECEPTACLES SHALL BE INSTALLED SI THAT NO POINT ALONG THE FLOOR LINE OF THE WALL IS MORE THAN 6-FEET FROM A RECEPTACLE.
b. CEC 2019 article 210.52(a) (2) AS AMENDED WALL SPACE. ANY WALL 24-INCHES OR MORE IN LENGTH SHALL BE PROVIDED WITH A RECEPTACLE OUTLET. WALL SPACE SHALL INCLUDE AROUND CORNERS, THE FIRST SLIDING PANEL OF A SLIDING DOOR, FIXED ROOM DEVIDERS SUCH AS A FREESTANDING BAR TYPE COUNTER. WALL SPACE NED NOT INCLUDE THE SPACE BEHIND OPERABLE DOORS. AND NEED NOT INCLUDE ENTRIES, HALLWAYS ETC. LESS THAN 5-FEET WIDE LOCATED IN BEDROOMS.
c. CEC ARTICLE 210.52(A) (3) AS AMENDED FLOOR RECEPTACLES.

3. IN EVERY KITCHEN, FAMILY ROOM, DINING ROOM, LIVING ROOM, PARLOR, LIBRARY, DEN, SUNROOM, BEDROOM, RECREATION ROOM OR SIMILAR ROOM OR AREA OF DWELLING UNITS, ALL 125 VOLT 15 AND 20 AMP RECEPTACLES SHALL BE LISTED TAMPER-RESISTANT RECEPTACLES CEC 2019 406.12)

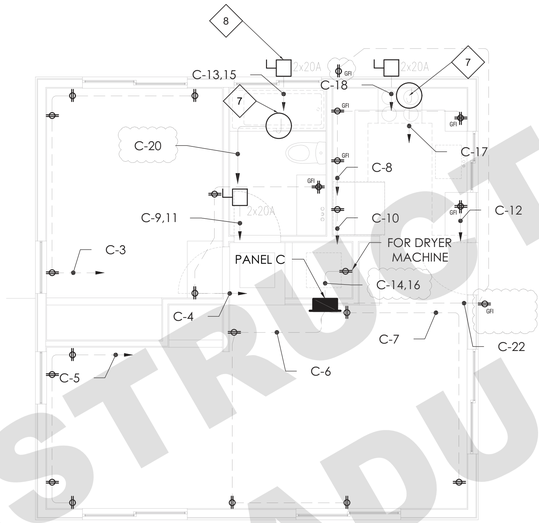

UNIT 03 ALTERNATIVE

Branch Panel: ADU UNIT 03 PANEL C
Location: ADU ENTRANCE | **Volts: 120/208** | **A.I.C Rating: 36kA**
Supply From: UTILITY METER | **Phases: 3** | **Mains Type: MCCB**
Mounting: Recessed | **Wires: 3+1** | **Mains Rating: 50A**
Enclosure Type 1

DESCRIPTION	VA	TRIP AMPS	A B C	TRIP AMPS	VA	DESCRIPTION
Lighting Living Room	370	15	1 2	15	220	Lighting Bed Room
Sockets Bed Room	1080	20	3 4	20	1080	Sockets Bed Room
Sockets Bed Room	1080	20	5 6	20	1080	Sockets Bed Room
Sockets Living Room	1080	20	7 8	20	810	Sockets Kitchen
Indoor Unit	629.72	20	9 10	20	1000	Power Socket
	629.72		11 12	20	1000	Power Socket
Outdoor Unit	2123.06	20	13 14	20	500	Dryer Machine
	2123.06		15 16	20	500	
Kitchen Hood	20	20	17 18	20	180	Gaz Water Heater Pump
Spare		20	19 20	20	30	Toilet Exhaust Fan
Spare		20	21 22	20	540	Sockets Outdoor
Space			23 24	20		Spare
Space			25 26	20		Spare
Space			27 28			Space
Space			29 30			Space

TOTAL (A):	5133.06	VA
TOTAL (B):	6952.78	VA
TOTAL (C):	3989.72	VA
TOTAL	16075.6	VA

Mains Rating 50A

	LIGHT	Mech.	SOCKET	Kitchen	TOTAL
CONNECTED	590	5715.552	6750	3020	16075.55
DEMAND FACTOR	1	0.3	0.5	0.6	
DEMAND LOAD	590	1714.6656	3375	1812	7491.666

NOT FOR CONSTRUCTION
PLAN 3 22-TADU-003

InnoDez

Address: Foxbrough pl
Pleasanton, CA. 94566
Phone: (424) 414-0997
Web site: www.innodez.com
Email: hello@innodez.com

CLIENT:

ADDRESS:
CITY OF FRESNO CALIFORNIA

CONFIDENTIALITY STATEMENT:

ALL DRAWINGS AND WRITTEN MATERIALS APPEARING HEREIN CONSTITUTE THE ORIGINAL AND UNPUBLISHED WORK OF THE DESIGNER AND THE SAME MAY NOT BE DUPLICATED, USED OR DISCLOSED WITHOUT CONSENT OF THE DESIGNER.

NOTES:

1. ALL DIMENSIONS HEREIN ARE IN IMPERIAL UNITS UNLESS STATED OTHERWISE.
2. THESE DRAWINGS ARE TO BE READ IN CONJUNCTION WITH ALL RELEVANT DESIGNER, ENGINEER OR SPECIALIST DRAWINGS AND SPECIFICATIONS.
3. THE CONTRACTOR MUST CHECK ALL DIMENSION AT SITE BEFORE COMMENCING WORK.
4. THE CONTRACTOR IS RESPONSIBLE FOR PROVIDING ALL NECESSARY TEMPORARY SUPPORT TO THE BUILDING AND ANY ADJACENT STRUCTURES.

REGISTERED PROFESSIONAL ENGINEER
SYED P. ALAM
NO. M 27087
EXP. 06/30/2023
MECHANICAL
STATE OF CALIFORNIA

REV. NO.	DESCRIPTION	DATE	BY
02	FOR APPROVAL	06.22	MN
01	FOR APPROVAL	03.22	MN
00	FOR APPROVAL	12.21	MN

PROJECT:
ADU PROGRAM

TITLE:
POWER LAYOUT
UNIT 3 ALTERNATIVE

PROJ. NO.	PROJ. ENGR.	SCALE @ 24X36:
2104		1/4"=1'-0"

DRAWING NO. E - 2 . 01 . 2

REV. 2

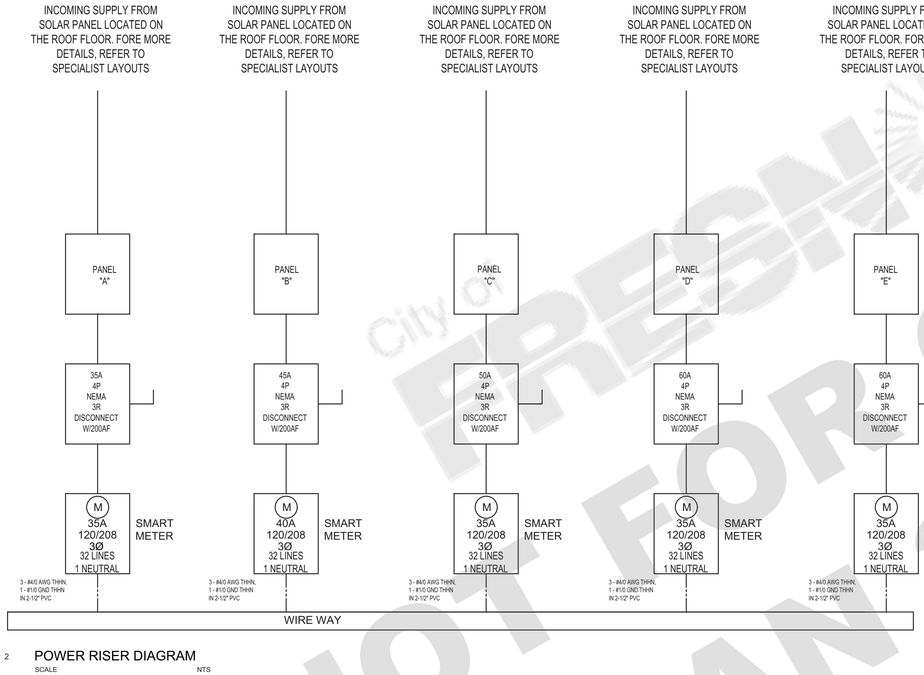

2 POWER RISER DIAGRAM

SCALE NTS

UFER GROUND NOTE :

ALL STEEL REBARS MEASURING 1/2 " OR MORE IN DIAMETER AND 20 ' OR LONGER IN LENGTH THAT IS ENCASED IN NOT LESS THAN 2 INCHES OF CONCRETE SHALL BE BONDED TO THE BUILDING'S GROUNDING ELECTRODE SYSTEM IN ACCORDANCE WITH CEC 250 (ELECTRICAL SUB CODE) SECTION 250.52(A)(3). THE "UFER" GROUND CAN BE 20 L.F. OF #2 OR #4 COPPER WIRING LAID INSIDE THE FOOTING AND THE SAME WIRE IS LONG ENOUGH TO REACH TO THE LOCATION OF THE MAIN ELECTRICAL PANEL OF THE HOUSE. UFER GROUND CAN BE (1) L-SHAPED PIECE OF #4 STEEL REBAR CONNECTED TO THE OTHER STEEL REBAR IN THE FOOTING AND STICKING OUT IN SUFFICIENT LENGTH FOR CONNECTION AT THE LOCATION OF THE MAIN ELECTRICAL PANEL OF THE HOUSE

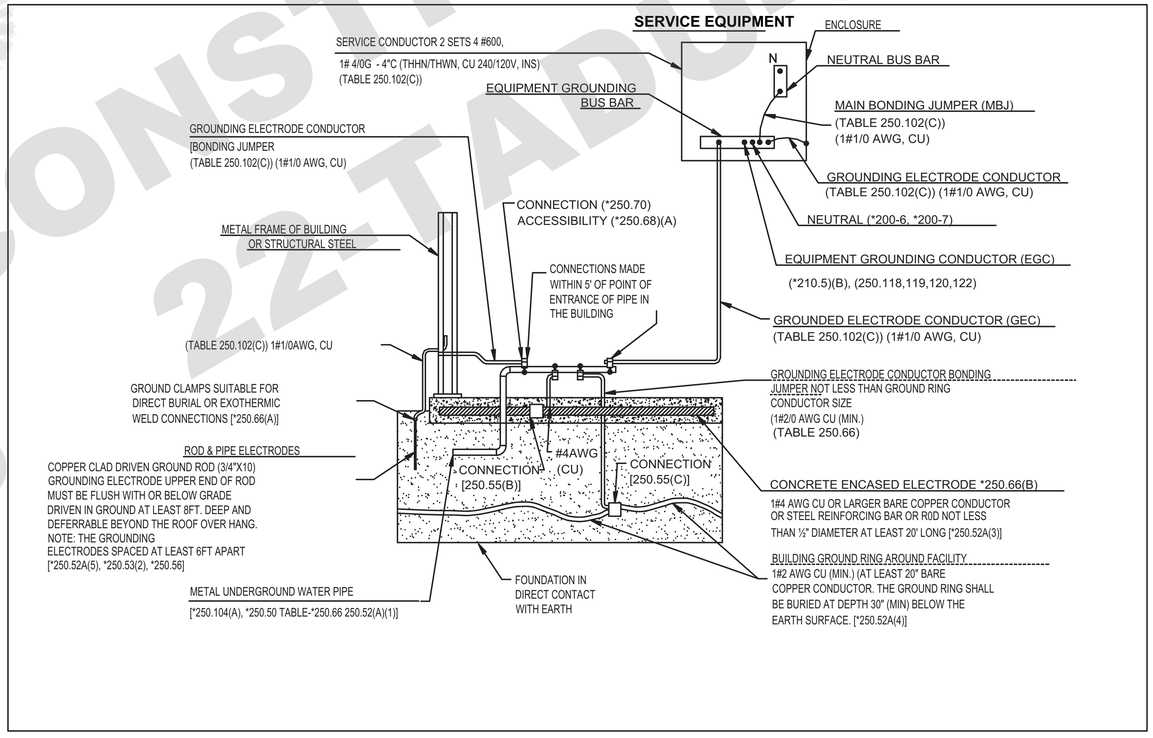

DETAIL "G" OF GROUNDING ELECTRODE SYSTEM (*250.50) & GROUNDING ELECTRODES (*250.52) AS SERVICE

SCALE: NTS

PRELIMINARY
NOT FOR CONSTRUCTION
PLAN CHECK
City of FRESNO
22 TADU 3

InnoDez

Address: Foxbrough pl
Pleasanton, CA. 94566
Phone: (424) 414-0997
Web site: www.innodez.com
Email: hello@innodez.com

CLIENT:

ADDRESS:

CITY OF FRESNO CALIFORNIA

CONFIDENTIALITY STATEMENT:

ALL DRAWINGS AND WRITTEN MATERIALS APPEARING HEREIN CONSTITUTE THE ORIGINAL AND UNPUBLISHED WORK OF THE DESIGNER AND THE SAME MAY NOT BE DUPLICATED, USED OR DISCLOSED WITHOUT CONSENT OF THE DESIGNER.

NOTES:

1. ALL DIMENSIONS HEREIN ARE IN IMPERIAL UNITS UNLESS STATED OTHERWISE.
2. THESE DRAWINGS ARE TO BE READ IN CONJUNCTION WITH ALL RELEVANT DESIGNER, ENGINEER OR SPECIALIST DRAWINGS AND SPECIFICATIONS.
3. THE CONTRACTOR MUST CHECK ALL DIMENSION AT SITE BEFORE COMMENCING WORK.
4. THE CONTRACTOR IS RESPONSIBLE FOR PROVIDING ALL NECESSARY TEMPORARY SUPPORT TO THE BUILDING AND ANY ADJACENT STRUCTURES.

REGISTERED PROFESSIONAL ENGINEER
SYED P. ALAM
NO. M 27087
EXP. 06/30/2023
MECHANICAL
STATE OF CALIFORNIA

REV. NO.	DESCRIPTION	DATE	BY
02	FOR APPROVAL	06.22	MN
01	FOR APPROVAL	03.22	MN
00	FOR APPROVAL	12.21	MN

PROJECT: **ADU PROGRAM**

TITLE: ELECTRICAL SINGLE LINE DIAGRAM

PROJ. NO.	PROJ. ENGR.	SCALE @ 24X36:
2104		NTS

DRAWING NO. E - 0 . 0 1

REV. 2

NOTE:
PV ARRAY TO BE ORIENTED
ON EITHER SOUTH OR
WEST FACING ROOF.

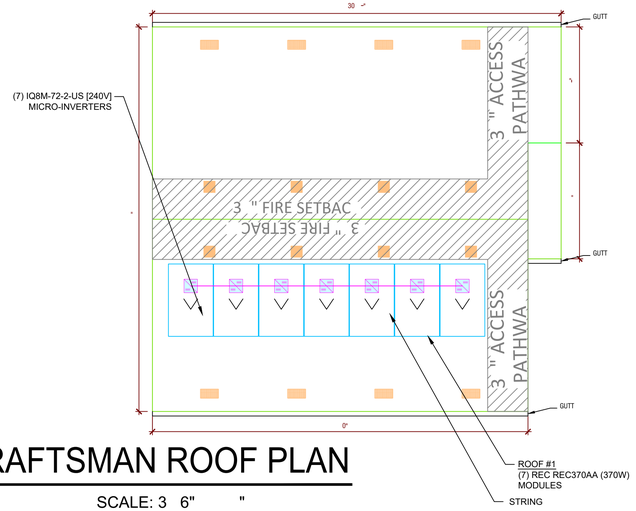

PV RACKING CRAFTSMAN ROOF PLAN

PV

SCALE: 3 6" "

NOTE:
PV ARRAY TO BE ORIENTED
ON EITHER SOUTH OR
WEST FACING ROOF.

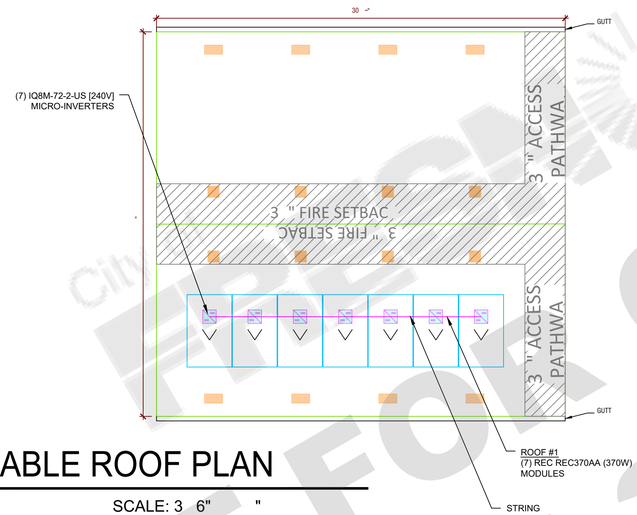

2 PV RACKING GABLE ROOF PLAN

PV

SCALE: 3 6" "

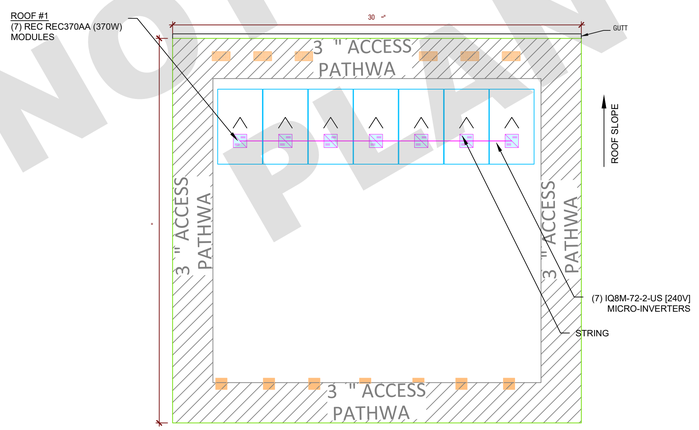

3 PV RACKING CONTEMPORARY ROOF PLAN

PV

SCALE: 3 6" "

PROJECT DESCRIPTION:

7X370 REC REC370AA (370W) MODULES
ROOF MOUNTED SOLAR PHOTOVOLTAIC SYSTEM
SYSTEM SIZE: 2.59 KW DC STC

EQUIPMENT SUMMARY
07 REC REC370AA (370W) MODULES
07 IQ8M-72-2-US [240V] MICROINVERTERS

MODULE TYPE, DIMENSIONS & WEIGHT

NUMBER OF MODULES = 7 MODULES
MODULE TYPE = REC REC370AA (370W) MODULES
MODULE WEIGHT = 43 LBS / 19.5 KG
MODULE DIMENSIONS = 67.8" x 40" = 18.83 SF
UNIT WEIGHT OF ARRAY = 2.28 PSF

ARRAY AREA WITH MOUNTING ROOF AREA				
ROOF TYPE	# OF MODULES	ARRAY AREA (Sq. Ft.)	TOTAL ROOF AREA (Sq. Ft.)	ROOF AREA COVERED BY ARRAY (%)
1	7	131.81	811	16.25
2	7	131.81	811	16.25
3	7	131.81	750	17.57

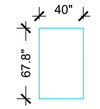

REC REC370AA (370W)
MODULES

SHEET INDEX

PV-1 PLOT PLAN & VICINITY MAP
PV-2 ELECTRICAL DESIGN
PV-3 EQUIPMENT SPECIFICATIONS
PV-4 EQUIPMENT SPECIFICATIONS

GOVERNING CODES
THIS PROJECT SHALL COMPLY WITH THE FOLLOWING CODE
2019 CALIFORNIA ELECTRICAL CODE
2019 CALIFORNIA RESIDENTIAL CODE
2019 CALIFORNIA BUILDING CODE
2019 CALIFORNIA GREEN BUILDING STANDARDS CODE
2019 CALIFORNIA ENERGY CODE
2019 CALIFORNIA PLUMBING CODE
2019 CALIFORNIA MECHANICAL CODE
2017 NATIONAL ELECTRICAL CODE
ALL OTHER ORDINANCES ADOPTED BY THE LOCAL GOVERNING AGENCIES.

LEGEND

UM - UTILITY METER
ACD - AC DISCONNECT
CB - AC COMBINER BOX
MSP - MAIN SERVICE PANEL
- VENT, ATTIC FAN (ROOF OBSTRUCTION)
- ROOF ATTACHMENT
- RAFTERS
- CONDUIT

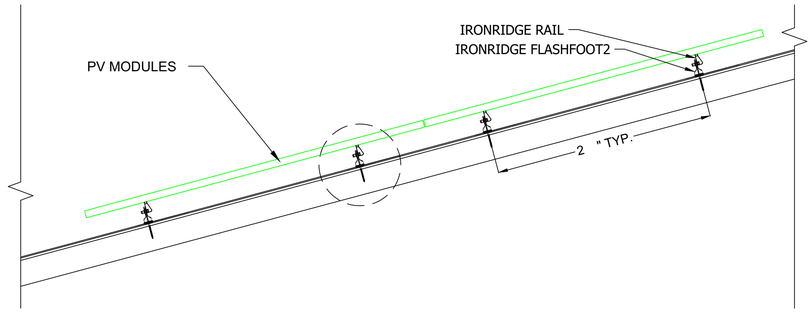

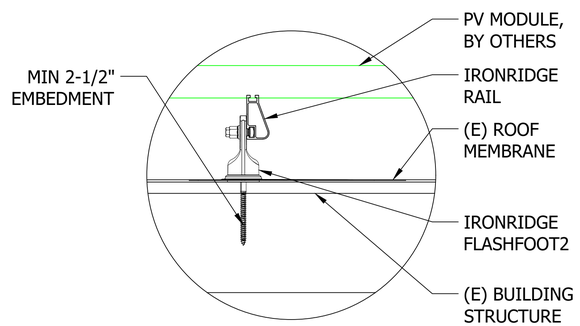

4 ATTACHMENT DETAIL

PV

SCALE: NTS

REVISIONS		
DESCRIPTION	DATE	REV

S r S

PROJECT NAME ADDRESS

PROJECT NO. 2104
ADU PROGRAM
CITY OF FRESNO
CALIFORNIA

ADU 03

SHEET NAME
PLOT PLAN
LAYOUT

SHEET SI E
ARCH D
24" X 36"

SHEET NUMBER
PV

NOT FOR CONSTRUCTION
PLAN 3 22-TADU-003

(7) REC REC370AA (370W) MODULES
(1) BRANCH CIRCUITS OF 7 MICROINVERTERS
CONNECTED IN PARALLEL

NOTE:
- EXTERIOR CONDUIT MUST BE PAINTED TO MATCH COLOR OF THE SURFACE ON WHICH THEY ARE MOUNTED.

Conduit Conductor Schedule (ALL CONDUCTORS MUST BE COPPER)					
Tag #	Description	Wire Gauge	# of Conductors/Color	Conduit Type	Conduit Size
1	PV Wire	10 AWG	2 (L1, L2)	N/A-Free Air	N/A-Free Air
	Bare Copper Ground (EGC/GEC)	6 AWG	1 BARE		
2	THWN-2	10 AWG	4 (1L1, 1L2) B/R	EMT	3/4"
	THWN-2 - Ground	8 AWG	1 (GRN)		

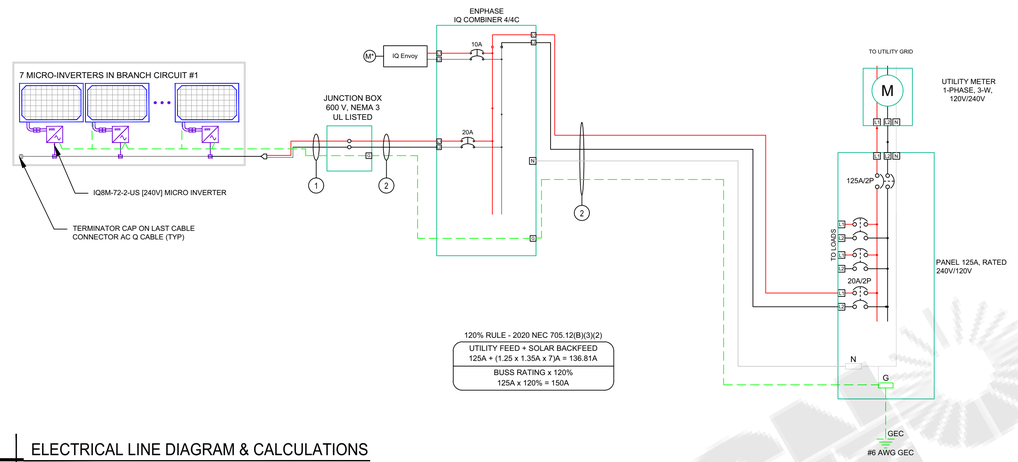

120% RULE - 2020 NEC 705.12(B)(3)(2)
UTILITY FEED + SOLAR BACKFEED 125A + (1.25 x 1.35A x 7)A = 136.81A
BUSS RATING x 120% 125A x 120% = 150A

1 ELECTRICAL LINE DIAGRAM & CALCULATIONS
PV-2

SOLAR MODULE SPECIFICATIONS	
MANUFACTURER	REC
MODEL #	REC370AA
PMAX	370W
VMP	37.4V
IMP	9.9A
VOC	44.1V
ISC	10.55A
MODULE DIMENSION	67.8"L x 40"W x 1.2"D (Inch)

INVERTER SPECIFICATIONS	
MANUFACTURER / MODEL #	IQ8M-72-2-US [240V] MICROINVERTER
NOMINAL OUTPUT VOLTAGE	240 V
NOMINAL OUTPUT CURRENT	1.35 VAC

PERCENT OF VALUES	NUMBER OF CURRENT CARRYING CONDUCTORS IN EMT
.80	4-6
.70	7-9
.50	10-20

AMBIENT TEMPERATURE SPECS	
RECORD LOW TEMP	-10••
AMBIENT TEMP (HIGH TEMP 2%)	37••
CONDUIT HEIGHT	0.5"
ROOF TOP TEMP	59••
CONDUCTOR TEMPERATURE RATE ON ROOF	90••
CONDUCTOR TEMPERATURE RATE OFF ROOF	75••
MODULE TEMPERATURE COEFFICIENT OF Voc	••••••••••••••••••••

OCPD Calculations

Breakers sized according to continuous duty output current. PV circuit nominal current based off # of modules per Circuit X (1.25[art.210.19(A)(1)(a)] X (1.35 Max AC current per micro-inverter)
Circuit #1 = 7 modules, Output Current w/ continuous duty = 11.81 < 20A Breaker
System output current w/ continuous duty = 11.81 < 20A (System OCPD)

AC CONDUCTOR AMPACITY CALCULATIONS: FROM ARRAY TO JUNCTION BOX

TEMP CORRECTION PER NEC TABLE 310.15(B)(2)(a): 0.88
CIRCUIT CONDUCTOR SIZE: 10 AWG
CIRCUIT CONDUCTOR AMPACITY: 35 A
#OF CURRENT CARRYING CONDUCTORS: 2
CONDUIT FILL PER NEC 310.15(B)(3)(a): FREE AIR

REQUIRED CIRCUIT CONDUCTOR AMPACITY PER NEC 690.8(A&B):
1.25 X MAX AC OUTPUT CURRENT X # OF INVERTERS PER STRING
1.25 X (1.35A X 7) = 11.81 A

DERATED AMPACITY OF CIRCUIT
TEMP CORR. PER NEC TABLE 310.15(B)(2)(a) X
CONDUIT FILL CORR. PER NEC TABLE 310.15(B)(3)(a) X
CIRCUIT CONDUCTOR AMPACITY =
0.88 X 1.0 X 35A = 30.8 A

AC CONDUCTOR AMPACITY CALCULATIONS: FROM JUNCTION BOX TO AC COMBINER BOX

TEMP CORRECTION PER NEC TABLE 310.15(B)(2)(a): 0.91
CIRCUIT CONDUCTOR SIZE: 10 AWG
CIRCUIT CONDUCTOR AMPACITY: 35 A
#OF CURRENT CARRYING CONDUCTORS: 2
CONDUIT FILL PER NEC 310.15(B)(3)(a): 1

REQUIRED CIRCUIT CONDUCTOR AMPACITY PER NEC 690.8(A&B):
1.25 X MAX AC OUTPUT CURRENT X # OF INVERTERS PER STRING
1.25 X (1.35A X 7) = 11.81 A

DERATED AMPACITY OF CIRCUIT
TEMP CORR. PER NEC TABLE 310.15(B)(2)(a) X
CONDUIT FILL CORR. PER NEC TABLE 310.15(B)(3)(a) X
CIRCUIT CONDUCTOR AMPACITY =
0.88 X 1.0 X 35A = 30.8 A

AC CONDUCTOR AMPACITY CALCULATIONS: FROM AC COMBINER BOX TO MSP

TEMP CORRECTION PER NEC TABLE 310.15(B)(2)(a): 0.91
CIRCUIT CONDUCTOR SIZE: 10 AWG
CIRCUIT CONDUCTOR AMPACITY: 35 A
#OF CURRENT CARRYING CONDUCTORS: 3
CONDUIT FILL PER NEC 310.15(B)(3)(a): 1

REQUIRED CIRCUIT CONDUCTOR AMPACITY PER NEC 690.8(A&B):
1.25 X MAX AC OUTPUT CURRENT X # OF INVERTERS PER STRING
1.25 X (1.35A X 7) = 11.81 A

DERATED AMPACITY OF CIRCUIT
TEMP CORR. PER NEC TABLE 310.15(B)(2)(a) X
CONDUIT FILL CORR. PER NEC TABLE 310.15(B)(3)(a) X
CIRCUIT CONDUCTOR AMPACITY =
0.88 X 1.0 X 35A = 30.8 A

ELECTRICAL NOTES
1.) ALL EQUIPMENT TO BE LISTED BY UL OR OTHER NRTL, AND LABELED FOR ITS APPLICATION.
2.) ALL CONDUCTORS SHALL BE COPPER, RATED FOR 600 V AND 90 DEGREE C WET ENVIRONMENT, UNLESS SPECIFIED.
3.) WIRING, CONDUIT AND RACEWAYS MOUNTED ON ROOFTOPS SHALL BE ROUTED DIRECTLY TO, AND LOCATED AS CLOSE AS POSSIBLE TO THE NEAREST RIDGE, HIP OR VALLEY.
4.) WORKING CLEARANCES AROUND ALL NEW AND EXISTING ELECTRICAL EQUIPMENT SHALL COMPLY WITH NEC 110.26.
5.) DRAWINGS INDICATE THE GENERAL ARRANGEMENT OF SYSTEMS. CONTRACTOR SHALL FURNISH ALL NECESSARY OUTLETS, SUPPORTS, FITTINGS AND ACCESSORIES TO FULFILL APPLICABLE CODES AND STANDARDS.
6.) WHERE SIZES OF JUNCTION BOXES, RACEWAYS, AND CONDUITS ARE NOT SPECIFIED, THE CONTRACTOR SHALL SIZE THEM ACCORDINGLY.
7.) ALL WIRE TERMINATIONS SHALL BE APPROPRIATELY LABELED AND READILY VISIBLE.
8.) MODULE BONDING AND GROUNDING CLIPS TO BE INSTALLED BETWEEN MODULE FRAME AND MODULE SUPPORT RAIL, PER THE GROUNDING CLIP AND PER RACKING MANUFACTURER'S INSTALLATION INSTRUCTION.
9.) THE POLARITY OF THE GROUNDED CONDUCTORS IS NEGATIVE

WARNING
ELECTRIC SHOCK HAZARD
DO NOT TOUCH TERMINALS
TERMINALS ON BOTH LINE AND LOAD SIDES MAY BE ENERGIZED IN THE OPEN POSITION

LABEL LOCATION:
AC DISCONNECT, POINT OF INTERCONNECTION
PER CODE: NEC 706.15(C)(4) and NEC 690.13(B), CB

WARNING - Electric Shock Hazard
No user serviceable parts inside
Contact authorized service provider for assistance

LABEL LOCATION:
INVERTER, JUNCTION BOXES (ROOF), AC DISCONNECT (PER CODE: NEC690.13.G.3 & NEC 690.13.G.4)

WARNING: PHOTOVOLTAIC POWER SOURCE

LABEL LOCATION:
CONDUIT, COMBINER BOX
(PER CODE: NEC 690.31(D)(2))

PV SYSTEM UTILITY LOCKABLE AC DISCONNECT

LABEL LOCATION:
AC DISCONNECT
[Only for systems >7kW]

WARNING
INVERTER OUTPUT CONNECTION DO NOT RELOCATE THIS OVERCURRENT DEVICE

LABEL LOCATION:
POINT OF INTERCONNECTION
(PER CODE: NEC 705.12 (B)(3)(2))
[Not required if panelboard is rated not less than sum of ampere ratings of all overcurrent devices supplying it]

CAUTION: SOLAR CIRCUIT

LABEL LOCATION:
MARKINGS PLACED ON ALL INTERIOR AND EXTERIOR DC CONDUIT, RACEWAYS, ENCLOSURES, AND CABLE ASSEMBLIES AT LEAST EVERY 10 FT, AT TURNS AND ABOVE/BELOW PENETRATIONS AND ALL COMBINER/JUCTION BOXES. (PER CODE: NEC 690.31(O)(2))

CAUTION: SOLAR ELECTRIC SYSTEM CONNECTED

LABEL LOCATION:
WEATHER RESISTANT MATERIAL, DURABLE ADHESIVE, UL969 AS STANDARD TO WEATHER RATING (UL LISTING OF MARKINGS NOT REQUIRED), MIN ⅜" LETTER HEIGHT ARIAL OR SIMILAR FONT NON-BOLD, PLACED WITHIN THE MAIN SERVICE DISCONNECT; PLACED ON THE OUTSIDE OF THE COVER WHEN DISCONNECT IS OPERABLE WITH SERVICE PANEL CLOSED. (PER CODE: NEC690.15, 690.13(B))

SOLAR DISCONNECT

LABEL LOCATION:
DISCONNECT, POINT OF INTERCONNECTION
(PER CODE: NEC690.13(B))

WARNING DUAL POWER SOURCE
SECOND SOURCE IS PHOTOVOLTAIC SYSTEM

LABEL LOCATION:
POINT OF INTERCONNECTION
(PER CODE: NEC 705.12(D)(3) & NEC 690.59)

PHOTOVOLTAIC POWER SOURCE BREAKERS ARE BACKFEEDING
240 VOLTS
20 AMPS

LABEL LOCATION:
AC BREAKER AND AC DISCONNECT
[Inside or front of panel]

SOLAR PV SYSTEM EQUIPPED WITH RAPID SHUTDOWN
TURN AC DISCONNECT SWITCH TO THE "OFF" POSITION TO SHUT DOWN PV SYSTEM AND REDUCE SHOCK HAZARD IN THE ARRAY

MARKING CONTENT AND FORMAT
- ALL CAPITAL LETTERS
- ARIAL OR SIMILAR FONT, NON-BOLD
- REFLECTIVE WEATHER RESISTANT MATERIAL SUITABLE FOR THE ENVIRONMENT (DURABLE ADHESIVE MATERIALS MUST MEET THIS REQUIREMENT)
- TO BE ATTACHED USING POP-RIVETS

ADHESIVE FASTENED SIGNS:
- THE LABEL SHALL BE SUITABLE FOR THE ENVIRONMENT WHERE IT IS INSTALLED.
- WHERE REQUIRED ELSEWHERE IN THIS CODE, ALL FIELD APPLIED LABELS, WARNINGS, AND MARKINGS SHOULD COMPLY WITH ANSI Z535.4 [NEC 110.21(B) FIELD MARKING].
- ADHESIVE FASTENED SIGNS MAY BE ACCEPTABLE IF PROPERLY ADHERED. VINYL SIGNS SHALL BE WEATHER RESISTANT [IFC 605.11.1.3]

POWER TO THIS BUILDING IS ALSO SUPPLIED FROM THE FOLLOWING SOURCES WITH DISCONNECTS LOCATED AS SHOWN
AT: MAIN SERVICE/ UTILITY METER AC DISCONNECT

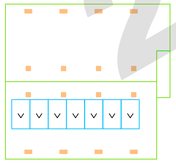

POWER TO THIS BUILDING IS ALSO SUPPLIED FROM THE FOLLOWING SOURCES WITH DISCONNECTS LOCATED AS SHOWN
AT: MAIN SERVICE/ UTILITY METER AC DISCONNECT

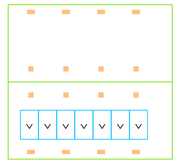

POWER TO THIS BUILDING IS ALSO SUPPLIED FROM THE FOLLOWING SOURCES WITH DISCONNECTS LOCATED AS SHOWN
AT: MAIN SERVICE/ UTILITY METER AC DISCONNECT

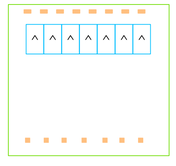

2 PLACARDS
PV-2
SCALE: NTS

City of FRESNO NOT FOR CONSTRUCTION PLAN 3 22-TADU-003

REVISIONS

DESCRIPTION	DATE	REV

Signature with Seal

PROJECT NAME & ADDRESS

PROJECT NO. 2104
ADU PROGRAM
CITY OF FRESNO
CALIFORNIA

ADU 03

SHEET NAME
ELECTRICAL DESIGN

SHEET SIZE
ARCH D
24" X 36"

SHEET NUMBER
PV-2

City of FRESNO
NOT FOR CONSTRUCTION
PLAN 3
22-TADU-003



REC ALPHA SERIES
PRODUCT DATASHEET

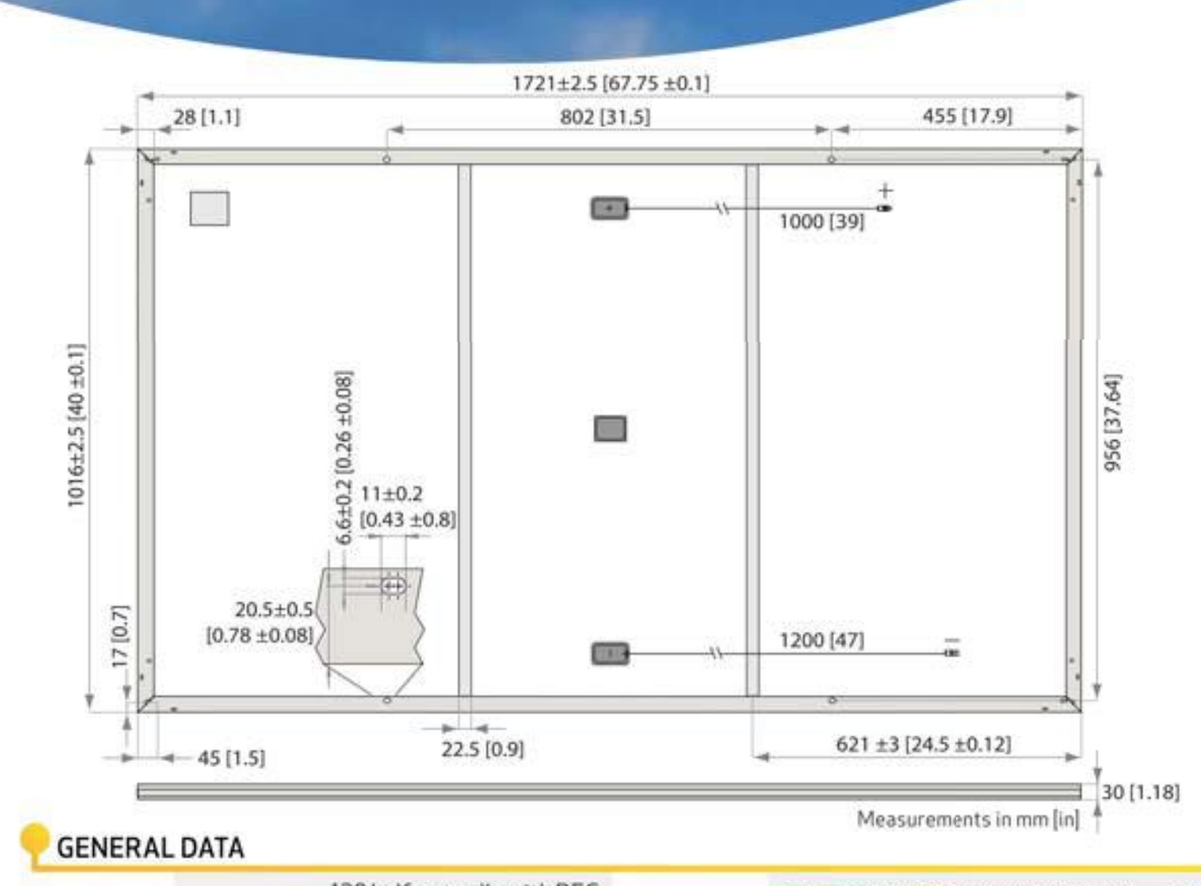

GENERAL DATA

Cell type:	120 half-cut cells with REC heterojunction cell technology 6 strings of 20 cells in series	Connectors:	Stäubli MC4 PV-KBT4/KST4, 12 AWG (4 mm²) in accordance with IEC 62852 IP68 only when connected
Glass:	0.13 in (3.2 mm) solar glass with anti-reflection surface treatment	Cable:	12 AWG (4 mm²) PV wire, 39+47 in (1+1.2 m) accordance with EN 50618
Backsheet:	Highly resistant polymeric construction	Dimensions:	67.8 x 40 x 1.2 in (1721 x 1016 x 30 mm) 18.8 sq ft (1.75 m²)
Frame:	Anodized aluminum (black)	Weight:	43 lbs (19.5 kg)
Junction box:	3-part, 3 bypass diodes, IP67 rated in accordance with IEC 62790	Origin:	Made in Singapore

ELECTRICAL DATA

Product Code*: RECxxxAA

STC	Power Output - P_{MAX} (Wp)	360	365	370	375	380
	Watt Class Sorting - (W)	-0/+5	-0/+5	-0/+5	-0/+5	-0/+5
	Nominal Power Voltage - V_{MPP} (V)	36.7	37.1	37.4	37.8	38.1
	Nominal Power Current - I_{MPP} (A)	9.82	9.85	9.9	9.94	9.98
	Open Circuit Voltage - V_{OC} (V)	43.9	44	44.1	44.2	44.3
	Short Circuit Current - I_{SC} (A)	10.49	10.52	10.55	10.58	10.61
	Power Density (W/sq ft)	19.15	19.41	19.68	19.94	20.21
	Panel Efficiency (%)	20.6	20.9	21.2	21.4	21.7
NMOT	Power Output - P_{MAX} (Wp)	274	278	282	286	289
	Nominal Power Voltage - V_{MPP} (V)	34.6	35.0	35.2	35.6	35.9
	Nominal Power Current - I_{MPP} (A)	7.93	7.96	8.00	8.03	8.06
	Open Circuit Voltage - V_{OC} (V)	41.4	41.5	41.6	41.6	41.7
	Short Circuit Current - I_{SC} (A)	8.47	8.50	8.52	8.55	8.57

Values at standard test conditions (STC: air mass AM 1.5, irradiance 10.75 W/sq ft (1000 W/m²), temperature 77°F (25°C), based on a production spread with a tolerance of P_{MAX}, V_{OC} & I_{SC} ±3% within one watt class. Nominal module operating temperature (NMOT: air mass AM 1.5, irradiance 800 W/m², temperature 68°F (20°C), windspeed 3.3 ft/s (1 m/s). * Where xxx indicates the nominal power class (P_{MAX}) at STC above.

CERTIFICATIONS

IEC 61215:2016, IEC 61730:2016, UL 1703, UL 61730	
IEC 62804	PID
IEC 61701	Salt Mist
IEC 62716	Ammonia Resistance
UL 1703	Fire Type Class 2
IEC 62782	Dynamic Mechanical Load
IEC 61215-2:2016	Hailstone (35mm)
AS4040.2 NCC 2016	Cyclic Wind Load
ISO 14001:2004, ISO 9001:2015, OHSAS 18001:2007, IEC 62941	

WARRANTY

	Standard	REC ProTrust	
Installed by an REC Certified Solar Professional	No	Yes	Yes
System Size	All	<25 kW	25-500 kW
Product Warranty (yrs)	20	25	25
Power Warranty (yrs)	25	25	25
Labor Warranty (yrs)	0	25	10
Power in Year 1	98%	98%	98%
Annual Degradation	0.25%	0.25%	0.25%
Power in Year 25	92%	92%	92%

See warranty documents for details. Conditions apply.

MAXIMUM RATINGS

Operational temperature:	-40 ... +85°C
Maximum system voltage:	1000 V
Design load (+): snow Maximum test load (+):	4666 Pa (97.5 lbs/sq ft)* 7000 Pa (146 lbs/sq ft)*
Design load (-): wind Maximum test load (-):	2666 Pa (55.6 lbs/sq ft)* 4000 Pa (83.5 lbs/sq ft)*
Max series fuse rating:	25 A
Max reverse current:	25 A

* Calculated using a safety factor of 1.5
* See installation manual for mounting instructions

TEMPERATURE RATINGS*

Nominal Module Operating Temperature:	44°C (±2°C)
Temperature coefficient of P_{MAX}:	-0.26 %/°C
Temperature coefficient of V_{OC}:	-0.24 %/°C
Temperature coefficient of I_{SC}:	0.04 %/°C

*The temperature coefficients stated are linear values

LOW LIGHT BEHAVIOUR

Typical low irradiance performance of module at STC:

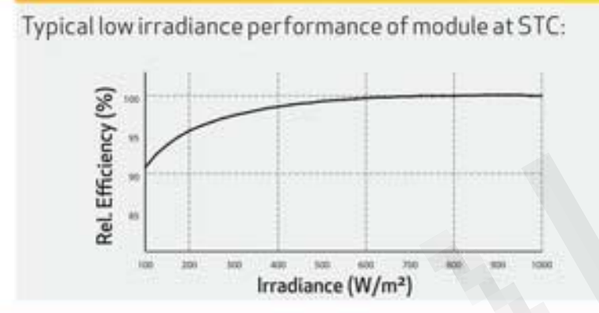

Specifications subject to change without notice.

Ref: PM-DS-12-01-Rev- D 03.20

Founded in Norway in 1996, REC is a leading vertically integrated solar energy company. Through integrated manufacturing from silicon to wafers, cells, high-quality panels and extending to solar solutions, REC provides the world with a reliable source of clean energy. REC's renowned product quality is supported by the lowest warranty claims rate in the industry. REC is a Bluestar Elkem company with headquarters in Norway and operational headquarters in Singapore. REC employs around 2,000 people worldwide, producing 1.5 GW of solar panels annually.

REC www.recgroup.com

ENPHASE. DATA SHEET



IQ8M and IQ8A Microinverters

Our newest IQ8 Microinverters are the industry's first microgrid-forming, software-defined microinverters with split-phase power conversion capability to convert DC power to AC power efficiently. The brain of the semiconductor-based microinverter is our proprietary application-specific integrated circuit (ASIC) which enables the microinverter to operate in grid-tied or off-grid modes. This chip is built in advanced 55nm technology with high speed digital logic and has super-fast response times to changing loads and grid events, alleviating constraints on battery sizing for home energy systems.



Part of the Enphase Energy System, IQ8 Series Microinverters integrate with the Enphase IQ Battery, Enphase IQ Gateway, and the Enphase App monitoring and analysis software.

Enphase 25 year limited warranty

IQ8 Series Microinverters redefine reliability standards with more than one million cumulative hours of power-on testing, enabling an industry-leading limited warranty of up to 25 years.



Connect PV modules quickly and easily to IQ8 Series Microinverters using the included Q-DCC-2 adapter cable with plug-n-play MC4 connectors.

UL CERTIFIED SAFETY

IQ8 Series Microinverters are UL Listed as PV Rapid Shut Down Equipment and conform with various regulations, when installed according to manufacturer's instructions.

Easy to install
- Lightweight and compact with plug-n-play connectors
- Power Line Communication (PLC) between components
- Faster installation with simple two-wire cabling

High productivity and reliability
- Produce power even when the grid is down*
- More than one million cumulative hours of testing
- Class II double-insulated enclosure
- Optimized for the latest high-powered PV modules

Microgrid-forming
- Complies with the latest advanced grid support**
- Remote automatic updates for the latest grid requirements
- Configurable to support a wide range of grid profiles
- Meets CA Rule 21 (UL 1741-SA) requirements

* Only when installed with IQ System Controller 2, meets UL 1741.
** IQ8M and IQ8A supports split phase, 240V installations only.

© 2022 Enphase Energy. All rights reserved. Enphase, the Enphase logo, IQ8 Microinverters, and other names are trademarks of Enphase Energy, Inc. Data subject to change.

IQ8MA-DS-0003-01-EN-US-2022-03-17

IQ8M and IQ8A Microinverters

INPUT DATA (DC)		IQ8M-72-2-US	IQ8A-72-2-US
Commonly used module pairings¹	W	260 – 460	295 – 500
Module compatibility		60-cell/120 half-cell, 66-cell/132 half-cell and 72-cell/144 half-cell	
MPPT voltage range	V	33 – 45	36 – 45
Operating range	V	25 – 58	
Min/max start voltage	V	30 / 58	
Max input DC voltage	V	60	
Max DC current² [module Isc]	A	15	
Overvoltage class DC port		II	
DC port backfeed current	mA	0	
PV array configuration		1x1 Ungrounded array; No additional DC side protection required; AC side protection requires max 20A per branch circuit	
OUTPUT DATA (AC)		**IQ8M-72-2-US**	**IQ8A-72-2-US**
Peak output power	VA	330	366
Max continuous output power	VA	325	349
Nominal (L-L) voltage/range³	V	240 / 211 – 264	
Max continuous output current	A	1.35	1.45
Nominal frequency	Hz	60	
Extended frequency range	Hz	50 – 68	
AC short circuit fault current over 3 cycles	Arms	2	
Max units per 20 A (L-L) branch circuit⁴		11	
Total harmonic distortion		<5%	
Overvoltage class AC port		III	
AC port backfeed current	mA	30	
Power factor setting		1.0	
Grid-tied power factor (adjustable)		0.85 leading – 0.85 lagging	
Peak efficiency	%	97.6	97.6
CEC weighted efficiency	%	97	97.5
Night-time power consumption	mW	60	
MECHANICAL DATA			
Ambient temperature range		-40°C to +60°C (-40°F to +140°F)	
Relative humidity range		4% to 100% (condensing)	
DC Connector type		MC4	
Dimensions (HxWxD)		212 mm (8.3") x 175 mm (6.9") x 30.2 mm (1.2")	
Weight		1.08 kg (2.38 lbs)	
Cooling		Natural convection – no fans	
Approved for wet locations		Yes	
Pollution degree		PD3	
Enclosure		Class II double-insulated, corrosion resistant polymeric enclosure	
Environ. category / UV exposure rating		NEMA Type 6 / outdoor	
COMPLIANCE			
Certifications		CA Rule 21 (UL 1741-SA), UL 62109-1, UL1741/IEEE1547, FCC Part 15 Class B, ICES-0003 Class B, CAN/CSA-C22.2 NO. 107.1-01 This product is UL Listed as PV Rapid Shut Down Equipment and conforms with NEC 2014, NEC 2017, and NEC 2020 section 690.12 and C22.1-2018 Rule 64-218 Rapid Shutdown of PV Systems, for AC and DC conductors, when installed according to manufacturer's instructions.	

(1) No enforced DC/AC ratio. See the compatibility calculator at https://link.enphase.com/module-compatibility
(2) Maximum continuous input DC current is 10.6A (3) Nominal voltage range can be extended beyond nominal if required by the utility. (4) Limits may vary. Refer to local requirements to define the number of microinverters per branch in your area.

IQ8MA-DS-0003-01-EN-US-2022-03-17

Data Sheet
Enphase Networking

Enphase IQ Combiner 4/4C
X-IQ-AM1-240-4
X-IQ-AM1-240-4C



UL LISTED

The **Enphase IQ Combiner 4/4C** with Enphase IQ Gateway and integrated LTE-M1 cell modem (included only with IQ Combiner 4C) consolidates interconnection equipment into a single enclosure and streamlines IQ microinverters and storage installations by providing a consistent, pre-wired solution for residential applications. It offers up to four 2-pole input circuits and Eaton BR series busbar assembly.

Smart
- Includes IQ Gateway for communication and control
- Includes Enphase Mobile Connect cellular modem (CELLMODEM-M1-06-SP-05), included only with IQ Combiner 4C
- Includes solar shield to match Enphase IQ Battery aesthetics and deflect heat
- Flexible networking supports Wi-Fi, Ethernet, or cellular
- Optional AC receptacle available for PLC bridge
- Provides production metering and consumption monitoring

Simple
- Centered mounting brackets support single stud mounting
- Supports bottom, back and side conduit entry
- Up to four 2-pole branch circuits for 240 VAC plug-in breakers (not included)
- 80A total PV or storage branch circuits

Reliable
- Durable NRTL-certified NEMA type 3R enclosure
- Five-year limited warranty
- Two years labor reimbursement program coverage included for both the IQ Combiner SKU's
- UL listed

To learn more about Enphase offerings, visit **enphase.com**

ENPHASE.

Enphase IQ Combiner 4/4C

MODEL NUMBER	
IQ Combiner 4 (X-IQ-AM1-240-4)	IQ Combiner 4 with Enphase IQ Gateway printed circuit board for integrated revenue grade PV production metering (ANSI C12.20 +/- 0.5%) and consumption monitoring (+/- 2.5%). Includes a silver solar shield to match the IQ Battery system and IQ System Controller 2 and to deflect heat.
IQ Combiner 4C (X-IQ-AM1-240-4C)	IQ Combiner 4C with Enphase IQ Gateway printed circuit board for integrated revenue grade PV production metering (ANSI C12.20 +/- 0.5%) and consumption monitoring (+/- 2.5%). Includes Enphase Mobile Connect cellular modem (CELLMODEM-M1-06-SP-05), a plug-and-play industrial-grade cell modem for systems up to 60 microinverters. (Available in the US, Canada, Mexico, Puerto Rico, and the US Virgin Islands, where there is adequate cellular service in the installation area.) Includes a silver solar shield to match the IQ Battery and IQ System Controller and to deflect heat.
ACCESSORIES AND REPLACEMENT PARTS	(not included, order separately)
Ensemble Communications Kit COMMS-CELLMODEM-M1-06 CELLMODEM-M1-06-SP-05 CELLMODEM-M1-06-AT-05	- Includes COMMS-KIT-01 and CELLMODEM-M1-06-SP-05 with 5-year Sprint data plan for Ensemble sites - 4G based LTE-M1 cellular modem with 5-year Sprint data plan - 4G based LTE-M1 cellular modem with 5-year AT&T data plan
Circuit Breakers BRK-10A-2-240V BRK-15A-2-240V BRK-20A-2P-240V BRK-15A-2P-240V-B BRK-20A-2P-240V-B	Supports Eaton BR210, BR215, BR220, BR230, BR240, BR250, and BR260 circuit breakers. Circuit breaker, 2 pole, 10A, Eaton BR210 Circuit breaker, 2 pole, 15A, Eaton BR215 Circuit breaker, 2 pole, 20A, Eaton BR220 Circuit breaker, 2 pole, 15A, Eaton BR215B with hold down kit support Circuit breaker, 2 pole, 20A, Eaton BR220B with hold down kit support
EPLC-01	Power line carrier (communication bridge pair), quantity - one pair
XA-SOLARSHIELD-ES	Replacement solar shield for IQ Combiner 4/4C
XA-PLUG-120-3	Accessory receptacle for Power Line Carrier in IQ Combiner 4/4C (required for EPLC-01)
XA-ENV-PCBA-3	Replacement IQ Gateway printed circuit board (PCB) for Combiner 4/4C
X-IQ-NA-HD-125A	Hold down kit for Eaton circuit breaker with screws.
ELECTRICAL SPECIFICATIONS	
Rating	Continuous duty
System voltage	120/240 VAC, 60 Hz
Eaton BR series busbar rating	125 A
Max. continuous current rating	65 A
Max. continuous current rating (input from PV/storage)	64 A
Max. fuse/circuit rating (output)	90 A
Branch circuits (solar and/or storage)	Up to four 2-pole Eaton BR series Distributed Generation (DG) breakers only (not included)
Max. total branch circuit breaker rating (input)	80A of distributed generation / 95A with IQ Gateway breaker included
Envoy breaker	10A or 15A rating GE/Siemens/Eaton included
Production metering CT	200 A solid core pre-installed and wired to IQ Gateway
Consumption monitoring CT (CT-200-SPLIT)	A pair of 200 A split core current transformers
MECHANICAL DATA	
Dimensions (WxHxD)	37.5 x 49.5 x 16.8 cm (14.75" x 19.5" x 6.63"). Height is 21.06" (53.5 cm) with mounting brackets.
Weight	7.5 kg (16.5 lbs)
Ambient temperature range	-40° C to +46° C (-40° to 115° F)
Cooling	Natural convection, plus heat shield
Enclosure environmental rating	Outdoor, NRTL-certified, NEMA type 3R, polycarbonate construction
Wire sizes	• 20 A to 50 A breaker inputs: 14 to 4 AWG copper conductors • 60 A breaker branch input: 4 to 1/0 AWG copper conductors • Main lug combined output: 10 to 2/0 AWG copper conductors • Neutral and ground: 14 to 1/0 copper conductors Always follow local code requirements for conductor sizing.
Altitude	To 2000 meters (6,560 feet)
INTERNET CONNECTION OPTIONS	
Integrated Wi-Fi	802.11b/g/n
Cellular	CELLMODEM-M1-06-SP-05, CELLMODEM-M1-06-AT-05 (4G based LTE-M1 cellular modem). Note that an Enphase Mobile Connect cellular modem is required for all Ensemble installations.
Ethernet	Optional, 802.3, Cat5E (or Cat 6) UTP Ethernet cable (not included)
COMPLIANCE	
Compliance, IQ Combiner	UL 1741, CAN/CSA C22.2 No. 107.1, 47 CFR, Part 15, Class B, ICES 003 Production metering: ANSI C12.20 accuracy class 0.5 (PV production) Consumption metering: accuracy class 2.5
Compliance, IQ Gateway	UL 60601-1/CANCSA 22.2 No. 61010-1

To learn more about Enphase offerings, visit **enphase.com**

© 2022 Enphase Energy. All rights reserved. Enphase, the Enphase logo, IQ Combiner 4/4C, and other names are trademarks of Enphase Energy, Inc. Data subject to change. 02-14-2022

ENPHASE.

Tech Brief

IRONRIDGE

FlashFoot2

The Strongest Attachment in Solar

IronRidge FlashFoot2 raises the bar in solar roof protection. The unique water seal design is both elevated and encapsulated, delivering redundant layers of protection against water intrusion. In addition, the twist-on Cap perfectly aligns the rail attachment with the lag bolt to maximize mechanical strength.

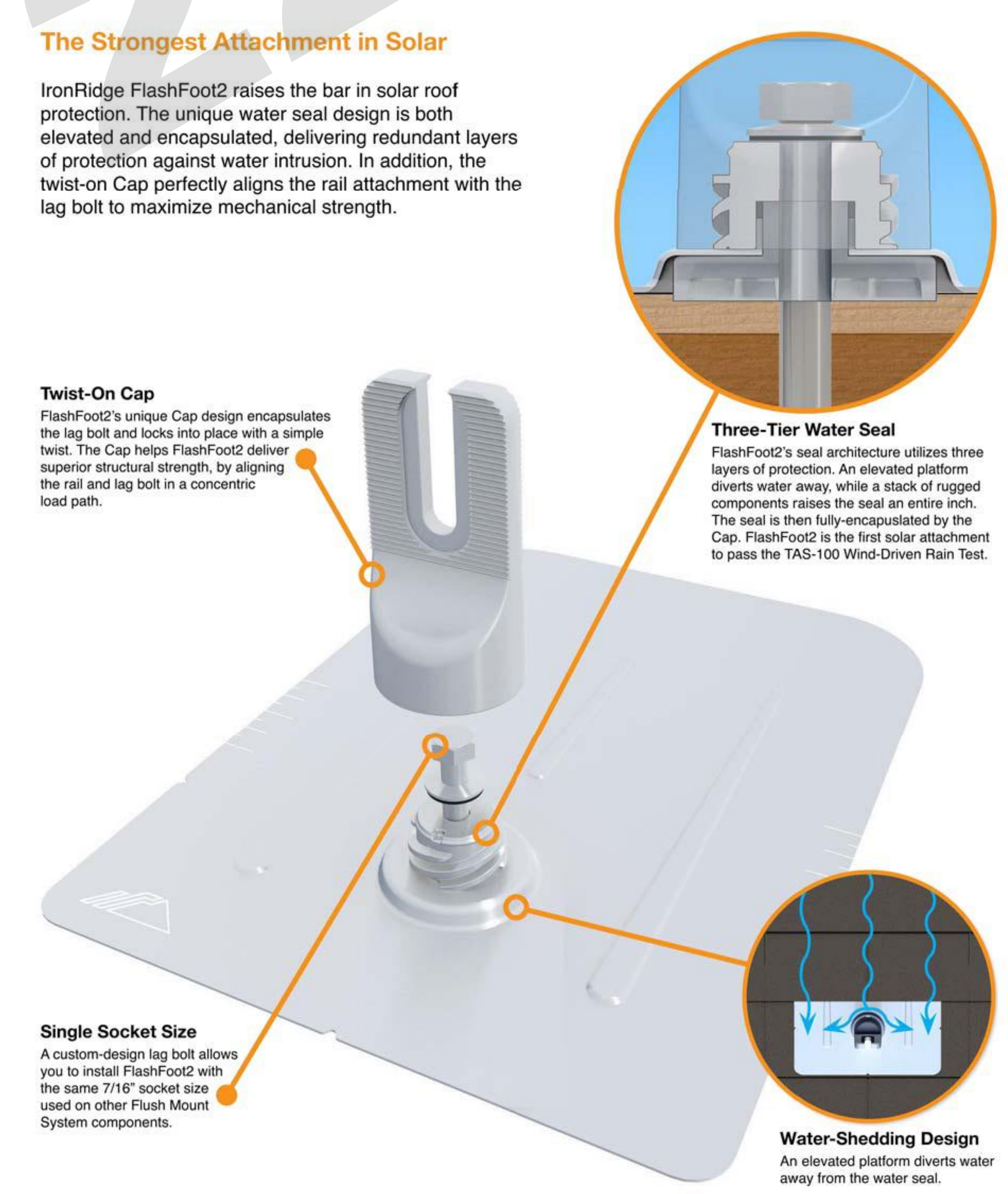

Twist-On Cap
FlashFoot2's unique Cap design encapsulates the lag bolt and locks into place with a simple twist. The Cap helps FlashFoot2 deliver superior structural strength, by aligning the rail and lag bolt in a concentric load path.

Three-Tier Water Seal
FlashFoot2's seal architecture utilizes three layers of protection. An elevated platform diverts water away, while a stack of rugged components raises the seal an entire inch. The seal is then fully-encapsulated by the Cap. FlashFoot2 is the first solar attachment to pass the TAS-100 Wind-Driven Rain Test.

Single Socket Size
A custom-design lag bolt allows you to install FlashFoot2 with the same 7/16" socket size used on other Flush Mount System components.

Water-Shedding Design
An elevated platform diverts water away from the water seal.

Tech Brief

Installation Features

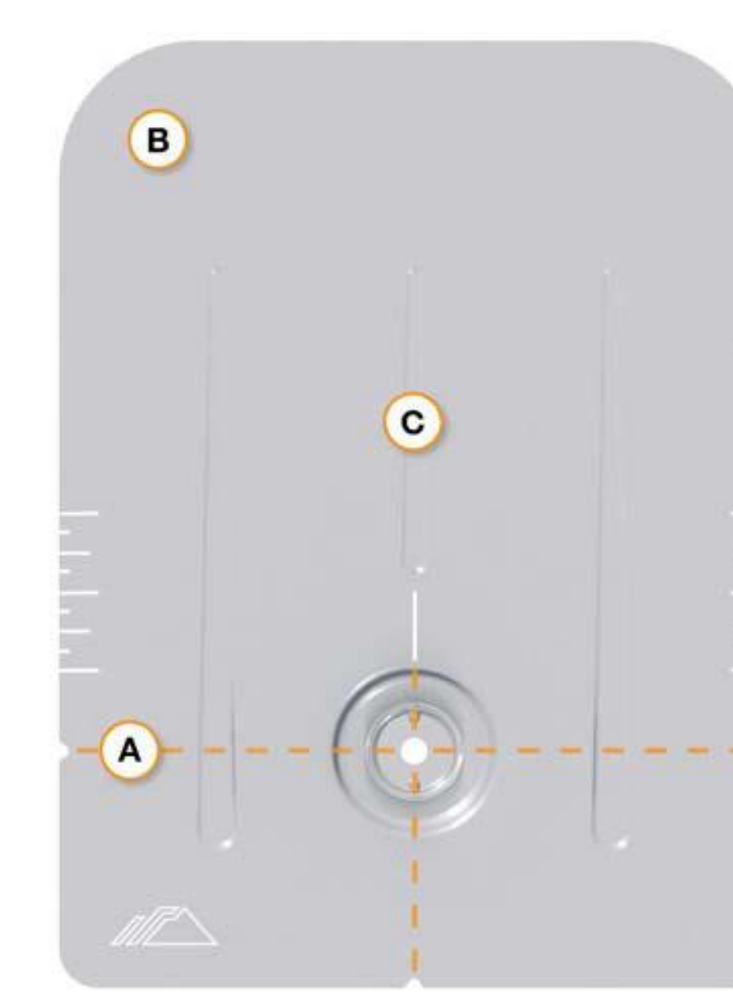

(A) Alignment Markers
Quickly align the flashing with chalk lines to find pilot holes.

(B) Rounded Corners
Makes it easier to handle and insert under the roof shingles.

(C) Reinforcement Ribs
Help to stiffen the flashing and prevent any bending or crinkling during installation.

Benefits of Concentric Loading

Traditional solar attachments have a horizontal offset between the rail and lag bolt, which introduces leverage on the lag bolt and decreases uplift capacity.

FlashFoot2 is the only product to align the rail and lag bolt. This concentric loading design results in a stronger attachment for the system.

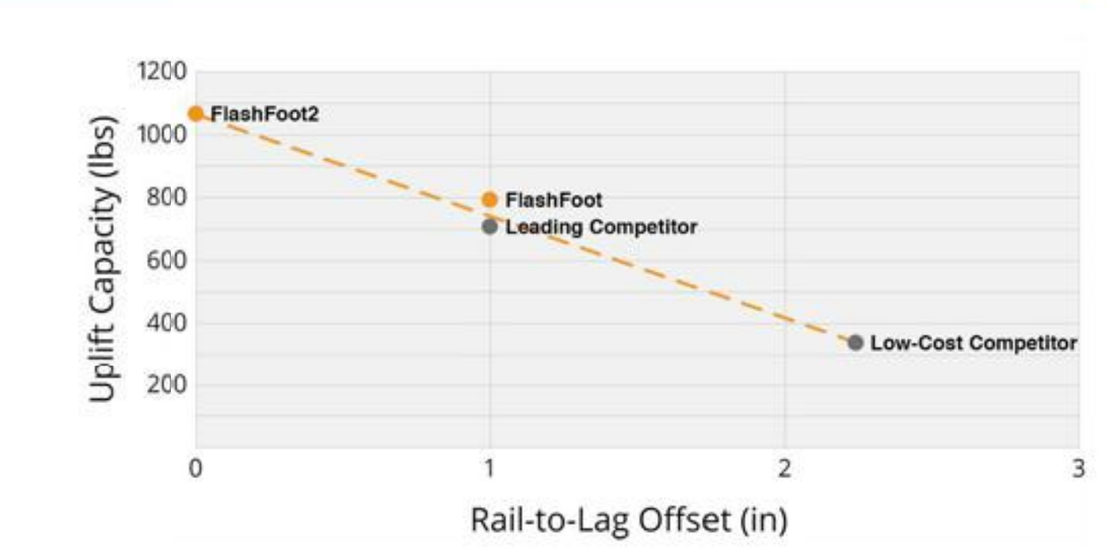

Testing & Certification

Structural Certification
Designed and Certified for Compliance with the International Building Code & ASCE/SEI-7.

Water Seal Ratings
Water Sealing Tested to UL 441 Section 27 "Rain Test" and TAS 100-95 "Wind Driven Rain Test" by Intertek. Ratings applicable for composition shingle roofs having slopes between 2:12 and 12:12.

UL 2703
Conforms to UL 2703 Mechanical and Bonding Requirements. See Flush Mount Install Manual for full ratings.

© 2016 IronRidge, Inc. All rights reserved. Visit www.ironridge.com or call 1-800-227-9523 for more information. Version 1.0

REVISIONS

DESCRIPTION	DATE	REV

S r S

PROJECT NAME ADDRESS

PROJECT NO. 2104
ADU PROGRAM
CITY OF FRESNO
CALIFORNIA
ADU 03

SHEET NAME
E UIPMENT SPECIFICATION

SHEET SI E
ARCH D
24" X 36"

SHEET NUMBER
PV 3

Tech Brief

IRONRIDGE

XR Rail Family

Solar Is Not Always Sunny

Over their lifetime, solar panels experience countless extreme weather events. Not just the worst storms in years, but the worst storms in 40 years. High winds capable of ripping panels from a roof, and snowfalls weighing enough to buckle a panel frame.

XR Rails are the structural backbone preventing these results. They resist uplift, protect against buckling and safely and efficiently transfer loads into the building structure. Their superior spanning capability requires fewer roof attachments, reducing the number of roof penetrations and the amount of installation time.

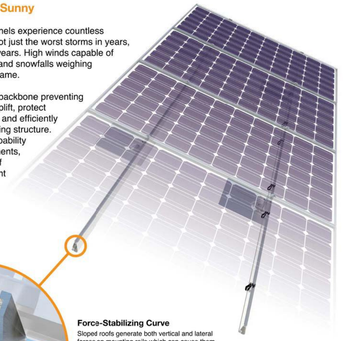

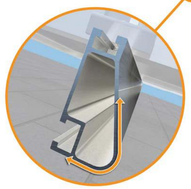

Force-Stabilizing Curve

Sloped roofs generate both vertical and lateral forces on mounting rails which can cause them to bend and twist. The curved shape of XR Rails is specially designed to increase strength in both directions while resisting the twisting. This unique feature ensures greater security during extreme weather and a longer system lifetime.

Compatible with Flat & Pitched Roofs

XR Rails are compatible with FlashFoot and other pitched roof attachments.

IronRidge offers a range of tilt leg options for flat roof mounting applications.

Corrosion-Resistant Materials

All XR Rails are made of marine-grade aluminum alloy, then protected with an anodized finish. Anodizing prevents surface and structural corrosion, while also providing a more attractive appearance.

© 2014 IronRidge, Inc. All rights reserved. Visit www.ironridge.com or call 1-800-227-9523 for more information. Version 1.11

Tech Brief

XR Rail Family

The XR Rail Family offers the strength of a curved rail in three targeted sizes. Each size supports specific design loads, while minimizing material costs. Depending on your location, there is an XR Rail to match.



XR10

XR10 is a sleek, low-profile mounting rail, designed for regions with light or no snow. It achieves 6 foot spans, while remaining light and economical.

- 6' spanning capability
- Moderate load capability
- Clear anodized finish
- Internal splices available



XR100

XR100 is the ultimate residential mounting rail. It supports a range of wind and snow conditions, while also maximizing spans up to 8 feet.

- 8' spanning capability
- Heavy load capability
- Clear & black anodized finish
- Internal splices available



XR1000

XR1000 is a heavyweight among solar mounting rails. It's built to handle extreme climates and spans 12 feet or more for commercial applications.

- 12' spanning capability
- Extreme load capability
- Clear anodized finish
- Internal splices available

Rail Selection

The following table was prepared in compliance with applicable engineering codes and standards. Values are based on the following criteria: ASCE 7-10, Roof Zone 1, Exposure B, Roof Slope of 7 to 27 degrees and Mean Building Height of 30 ft. Visit IronRidge.com for detailed span tables and certifications.

Load		Rail Span					
Snow (PSF)	Wind (MPH)	4'	5' 4"	6'	8'	10'	12'
None	100	XR10		XR100		XR1000	
	120						
	140						
	160						
10-20	100						
	120						
	140						
	160						
30	100						
	160						
40	100						
	160						
50-70	160						
80-90	160						

© 2014 IronRidge, Inc. All rights reserved. Visit www.ironridge.com or call 1-800-227-9523 for more information. Version 1.11

IRONRIDGE

28357 Industrial Blvd.
Hayward, CA 94545
1-800-227-9523
IronRidge.com

Attn: Corey Geiger, COO, IronRidge Inc.
Date: December 31st, 2019

Re: Structural Certification and Span Tables for the IronRidge Flush Mount System

This letter addresses the structural performance and code compliance of IronRidge's Flush Mount System. The contents of the letter shall be read in its entirety before applying to any project design. The Flush Mount System is a proprietary rooftop mounting system used to support photovoltaic (PV) modules installed in portrait or landscape orientation and set parallel to the underlying roof surface. PV modules are supported by extruded aluminum XR Rails and secured to the rails with IronRidge mounting clamps. The XR Rails are side mounted to a selected roof attachment with 3/8" stainless steel bonding hardware and then attached directly to the roof structure or to a stanchion that is fastened to the underlying roof structure. Assembly details of a typical Flush Mount installation and its core components are shown in Exhibit EX-0015.

The IronRidge Flush Mount System is designed and certified to the structural requirements of the reference standards listed below, for the load conditions and configurations tabulated in the attached span tables.

- ASCE/SEI 7-16 Minimum Design Loads for Buildings and Other Structures (ASCE 7-16)
- 2018 International Building Code (IBC-2018)
- 2019 California Building Code (CBC-2019)
- 2015 Aluminum Design Manual (ADM-2015)

The tables included in this letter provide the maximum allowable spans of XR Rails in the Flush Mount System for the respective loads and configurations listed, covering wind exposure categories B, C, & D, roof zones provided in ASCE 7-16 for gable & hip roof profiles, and roof slopes of 8° to 45°. The tabulated spans are applicable when the following conditions are met:

1. *Span* is the distance between two adjacent roof attachment points (measured at the center of the attachment fastener).
2. The underlying roof pitch, measured between the roof surface and horizontal plane, is 45° or less.
3. The *mean roof height*, defined as the average of the roof eave height and the roof ridge height measured from grade, does not exceed 30 feet.
4. A clearance from the underside of the array to the roof surface of 2" minimum shall be provided and the height of the array, the distance from the module top surface to the roof surface (defined as h_D), shall not exceed 10".
5. Module length and area shall not exceed the maximum values listed on the respective span tables.
6. All Flush Mount components shall be installed in a professional workmanlike manner per IronRidge's *Flush Mount Installation Manual* and other applicable standards for the general roof construction practice.

© 2019 IronRidge, Inc.

IRONRIDGE

28357 Industrial Blvd.
Hayward, CA 94545
1-800-227-9523
IronRidge.com

The parameters and adjustments allowed in the span tables are defined as the following:

1. The Flush Mount System is designed as a Risk Category II structure as defined by ASCE 7-16 Table 1.5-1.
2. Wind speed shall conform to ASCE 7-16 Fig. 26.5-1B (for Risk Category II) and applicable state & local county/city amendments to the IBC. No special wind topographic features are included and both topographic coefficient (K_{zt}) and wind ground elevation factor (K_d) are taken as 1.0.
3. Snow load used in the span tables is the *ground snow* and shall conform to ASCE 7-16 Fig. 7.2-1 and applicable state & local county/city amendments to the IBC. If the local jurisdiction specified snow load is in the format of a *flat roof snow*, it shall first be converted to a *ground snow* following the local building code/ amendments before the application of the attached span tables. No special snow conditions are considered including unbalanced, drifting, sliding, retention, or ponding snow. No rain-on-snow surcharge load is considered. The span tables do not apply to buildings which are intentionally kept below freezing, kept just above freezing, or unheated.
4. The span tables reflect the ASCE 7 prescribed earthquake loads with the maximum magnitudes being:
   (a) For ground snow no greater than 42psf: $S_s \leq 2.0g$ for Site Class A, B, C, & D.
   (b) For ground snow greater than 65psf: $S_s \leq 1.0g$ for Site Class A, B, C, & D.
   (c) For ground snow between 42 and 65psf: $S_s \leq 1.5g$ for Site Class A, B, C, & D.
5. Roof zones are defined by ASCE 7-16 Figure 30.3-2A to Figure 30.3-2I and are organized into three *groups* in which the zones share the same External Pressure Coefficients (GC_p). Roof zones comprising each *group* along with each roof zone's size and location are depicted in Figures 2 and 3 below each span table.
6. The maximum rail cantilever length, measured from the rail end to the nearest attachment point, shall be the lesser of the following two conditions: 40% of the allowable span provided for the respective load & configuration condition from the span tables, or 36".
7. Allowable span length in the charts may be multiplied by a factor of 1.08 if the rails are continuous over a minimum of three spans.
8. No rail splices are allowed in the cantilever, outer 2/3 of end spans, or middle 1/3 of interior spans.
9. Shaded cells of the span tables indicate conditions in which UFO Mid Clamp connection capacity is exceeded. If such conditions are encountered contact support@ironridge.com.
10. Systems using CAMO module clamps shall be installed with the following guidance:
    a) For single module installations (orphan modules) using modules with a length greater than 67.5", CAMO clamps shall not be installed in regions that experience ground snow loads of 70psf and greater. Such scenarios are shown by asterisks in the applicable span tables.
    b) CAMO will function within a module's design load ratings. Be sure the specific module being used with CAMO meets the dimensional requirements shown in the figure below and that the module selected is suitable for the environmental conditions of a particular project.

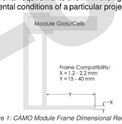

Figure 1: CAMO Module Frame Dimensional Requirements

© 2019 IronRidge, Inc.

IRONRIDGE

28357 Industrial Blvd.
Hayward, CA 94545
1-800-227-9523
IronRidge.com

Span values for *Exposed* and *Edge* module conditions, as defined below, are included in the attached span tables and shall be used when each condition exists. The maximum allowable span for *Exposed* or *Edge* modules shall be the lesser of the following two: (1) The span value for the *Exposed* or *Edge* module condition; (2) The span value determined by site wind speed and ground snow load. Additionally, irrespective of the lesser span, the shaded cells for the *Exposed* and *Edge* module conditions which reflect the UFO clamp usage limitation detailed in note 9 of page 2 shall apply to the respective condition.

1. Exposed Module conditions:

A module is defined as *Exposed* (per Section 29.4.4 of ASCE 7-16) if the distance from any of its free edges (an edge with no connectivity to other modules) to its facing roof edge (such as eave, ridge, rake, or hip) is greater than $0.5h$ (h is ASCE defined building height) AND if the distance from its free edge to any other adjacent array or panel is greater than 4 feet.

The allowable spans and cantilever shall only be applied to the portion of rail directly under *Exposed Modules*.

2. Edge Module conditions:

A module is defined as an *Edge Module* when its distance from any side of the module to its facing perimeter roof edge (such as eave, ridge, rake, or hip) is less than 2 times the height of the array ($2h_D$) where h_D is measured from the roof surface to the top surface of the module.

The allowable spans and cantilever shall only be applied to the portion of rail directly under *Edge Modules*. Additionally, if the roof edge is the eave or ridge, only the rail nearest to that roof edge shall be considered for this span adjustment.

© 2019 IronRidge, Inc.

IRONRIDGE

28357 Industrial Blvd.
Hayward, CA 94545
1-800-227-9523
IronRidge.com

The span tables provided in this letter are certified based on the structural performance of IronRidge XR Rails only with no consideration of the structural adequacy of the chosen roof attachments, PV modules, or the underlying roof supporting members. It is the responsibility of the installer or system designer to verify the structural capacity and adequacy of the aforementioned system components in regards to the applied or resultant loads of any chosen array configuration.

Sincerely,

REGISTERED PROFESSIONAL ENGINEER
GANG XUAN
NO. 6504
STRUCTURAL
STATE OF CALIFORNIA

Gang Xuan, SE

Senior Structural Engineer

Date Sealed:
2019.12.31
15:20:49
-08'00'

© 2019 IronRidge, Inc.

Intertek

8431 Murphy Drive
Middleton, WI 53562 USA

Telephone: 608.836.4400
Facsimile: 608.831.9279
www.intertek.com

Test Verification of Conformity

In the basis of the tests undertaken, the sample(s) of the below product have been found to comply with the requirements of the referenced specifications at the time the tests were carried out.

Applicant Name & Address:	IronRidge, Inc. 1495 Zephyr Ave. Hayward, CA 94544 USA
Product Description:	Flush Mount System with XR Rails.
Ratings & Principle Characteristics:	Fire Class Resistance Rating: -Flush Mount (Symmetrical). Class A Fire Rated for Low Slope applications when using Type 1, 2 and 3, listed photovoltaic modules. Class A Fire Rated for Steep Slope applications with Type1, 2 and 3, listed photovoltaic modules. Tested with a 5" gap (distance between the bottom the module frame and the roof covering), per the standard this system can be installed at any gap allowed by the manufacturers installation instructions. No perimeter guarding is required. This rating is applicable with any IronRidge or 3'rd party roof anchor.
Models:	IronRidge Flush Mount with XR Rails
Brand Name:	IronRidge Flush Mount
Relevant Standards:	UL 2703 (Section 15.2 and 15.3) Standard for Safety Mounting Systems, Mounting Devices, Clamping/Retention Devices, and Ground Lugs for Use with Flat-Plate Photovoltaic Modules and Panels, First Edition dated Jan. 28, 2015 **Referencing** UL1703 Third Edition dated Nov. 18, 2014, (Section 31.2) Standard for Safety for Flat-Plate Photovoltaic Modules and Panels.
Verification Issuing Office:	Intertek Testing Services NA, Inc. 8431 Murphy Drive Middleton, WI 53562
Date of Tests:	08/27/2014 to 03/17/2015
Test Report Number(s):	101769343MID-001r1, 101769343MID-001a, 101915978MID-001 & 101999492MID-001ar1-cr1

This verification is part of the full test report(s) and should be read in conjunction with them. This report does not automatically imply product certification.

Completed by:	Chris Zimbrich	**Reviewed by:**	Chad Naggs
Title:	Technician II, Fire Resistance	**Title:**	Technician I, Fire Resistance
Signature:		**Signature:**	
Date:	05/25/2016	**Date:**	05/25/2016

This Verification is for the exclusive use of Intertek's client and is provided pursuant to the agreement between Intertek and its Client. Intertek's responsibility and liability are limited to the terms and conditions of the agreement. Intertek assumes no liability to any party, other than to the Client in accordance with the agreement, for any loss, expense or damage occasioned by the use of this Verification. Only the Client is authorized to permit copying or distribution of this Verification. Any use of the Intertek name or one of its marks for the sale or advertisement of the tested material, product or service must first be approved in writing by Intertek. The observations and test/inspection results referenced in this Verification are relevant only to the sample tested/inspected. This Verification by itself does not imply that the material, product, or service is or has ever been under an Intertek certification program.

FREE CONSTRUCTION
NOT FOR CONSTRUCTION
PLANS 22-1703
City of

REVISIONS		
DESCRIPTION	DATE	REV

S r S

PROJECT NAME ADDRESS

PROJECT NO. 2 4
ADU PROGRAM
CITY OF FRESNO
CALIFORNIA

ADU 3

SHEET NAME
E UIPMENT
SPECIFICATION

SHEET SI E
ARCH D
24" X 36"

SHEET NUMBER
PV 4