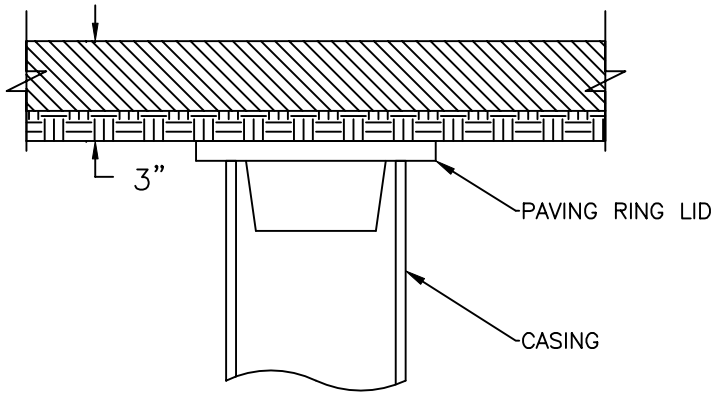

FIG. NO. 1

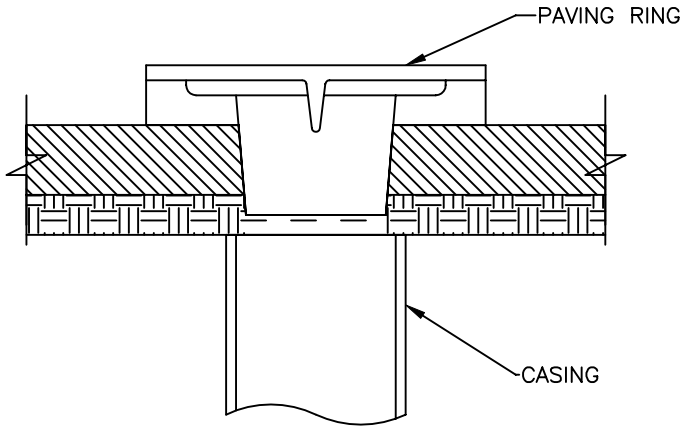

FIG. NO. 2

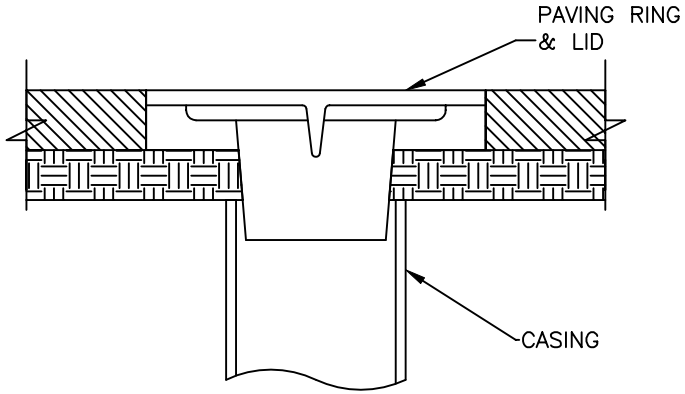

FIG. NO. 3

INSTALLATION PROCEDURE

1. CASING SHALL BE CENTERED OVER VALVE STEM.
2. ADJUST CASING TO 3" BELOW FINISHED GRADE.
3. COVER CASING WITH LID OF THE PAVING RING.
4. PAVE OVER CASING (FIG. NO. 1)
5. IMMEDIATELY AFTER MACHINE HAS PAVED OVER CASING, UNCOVER, AND REMOVE LID, THEN INSET PAVING RING INTO CASING AND PUSH EXCESS A.C. UNDER FLANGES OF PAVING RING. (FIG. NO. 2)
6. PRESS PAVING RING DOWN TO LEVEL WITH TOP OF A.C., INSTALL LID INSIDE PAVING RING AND BRUSH OFF EXCESS PAVING MATERIAL ON TOP OF PAVING RING. (FIG. NO. 3)
7. PAVING RING CAN BE ROLLED IN PLACE AT SAME TIME A.C. IS ROLLED.

INSTALLATION PROCEDURE
FOR PAVING RING & LID

REF. & REV.
AUG. 2002

CITY OF FRESNO
W-8