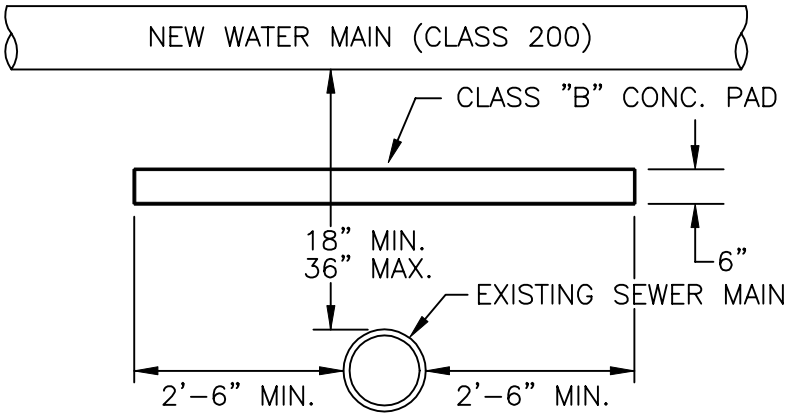

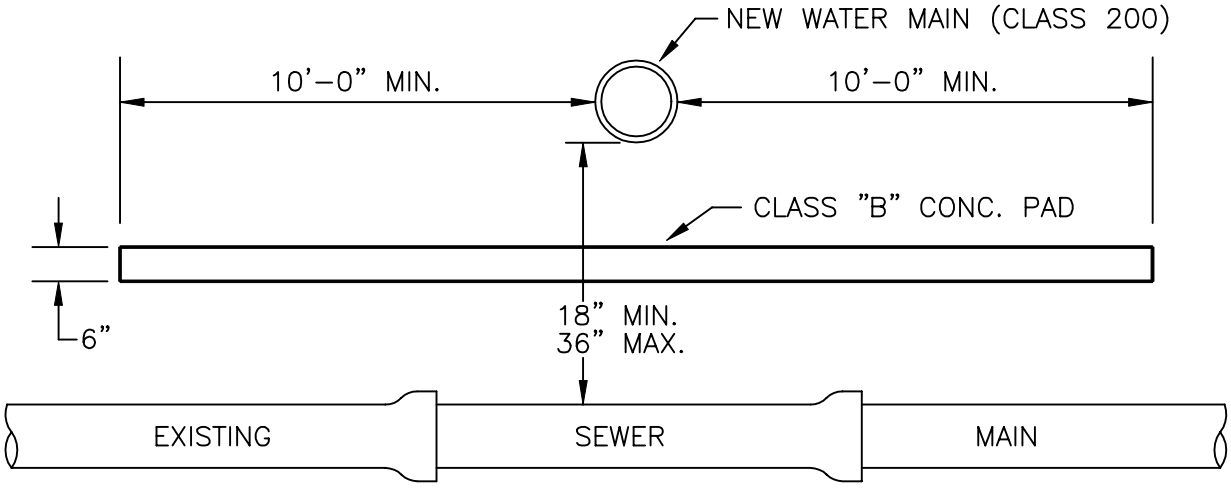

ALTERNATE TO FULL CONCRETE ENCASEMENT (NEW WATER MAIN CROSSING EXISTING SEWER MAIN, ZONE D)	REF. & REV. AUG. 2002	CITY OF FRESNO W-26