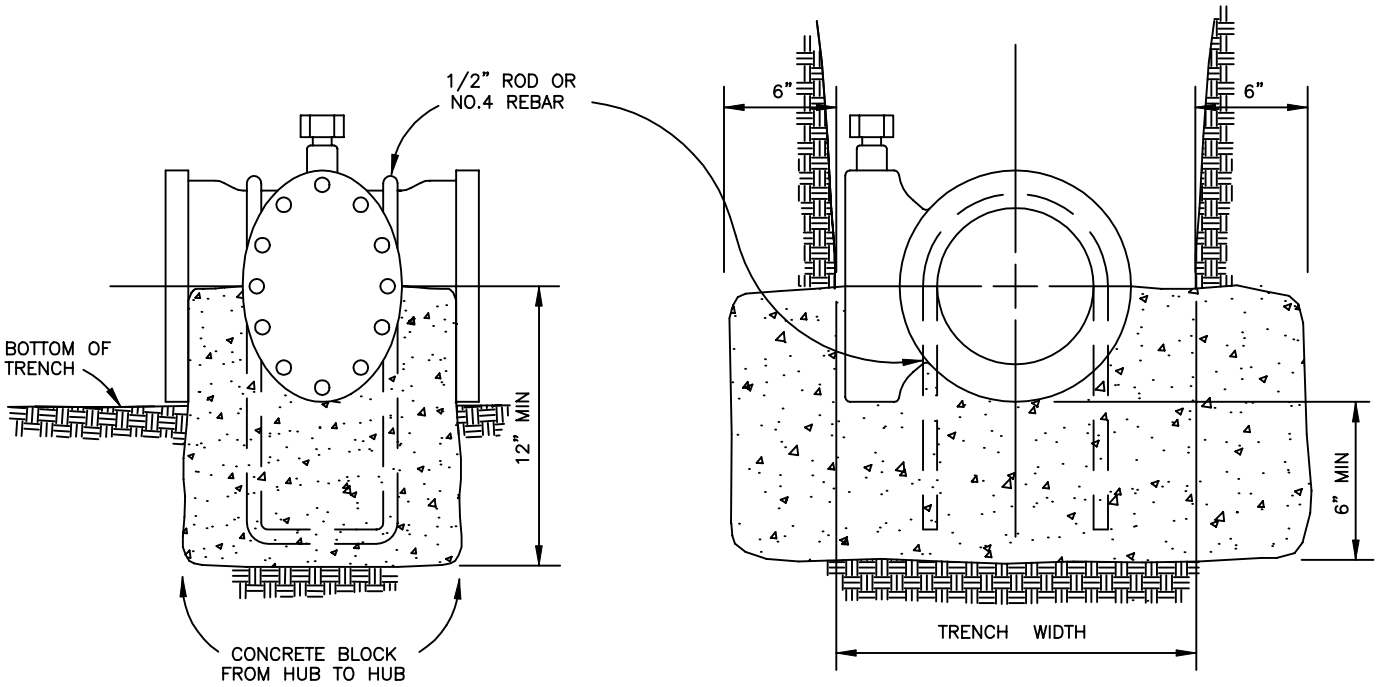

NOTE:

OPERATING NUT OF BUTTERFLY VALVE SHALL BE PLACED ON SOUTH OR WEST SIDE DEPENDING ON LINE LOCATION.

VALVE ANCHOR FOR LINE VALVE	REF. & REV. AUG. 2002	CITY OF FRESNO W-25