TYPICAL ENCLOSURE FOR BACKFLOW PREVENTION DEVICES

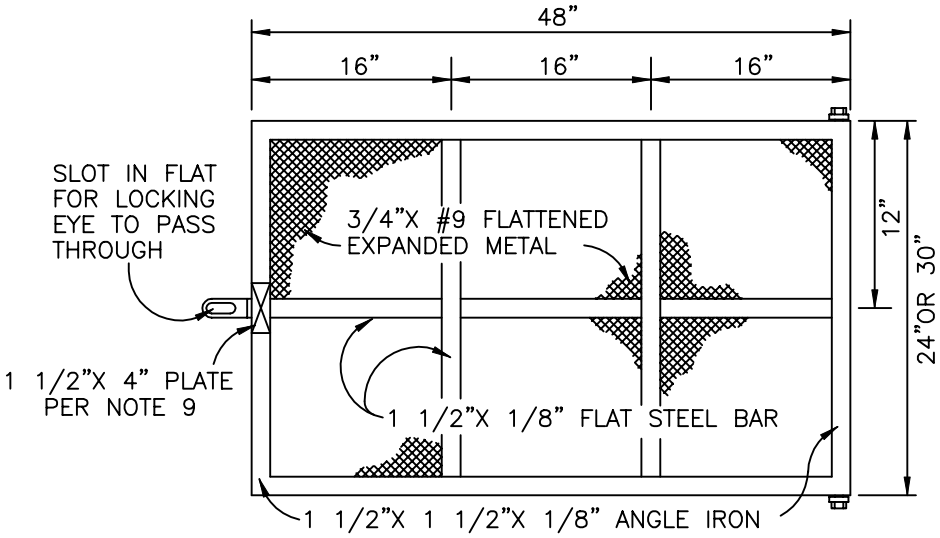

TOP VIEW

GENERAL NOTES

1. EXPANDED METAL GRATING TO BE WELDED INSIDE STRUCTURAL SUPPORTS EVERY 5" MINIMUM.
2. ALL DIAGONAL OR CIRCULAR CUT EXPOSED EDGES SHALL BE BANDED WITH BAR STOCK WELDED AT ALL CONTACT POINTS.
3. FABRICATE HINGE FROM 1/2" GALV. BOLTS WITH GALV. WASHERS & DOUBLE NUTS. BURR THREADS TO PREVENT REMOVAL.
4. WELD ALL 1/2" THICK BAR INTERSECTIONS WITH 3/8" FILLET WELDS.
5. CONCRETE SLAB TO BE CLASS "A" CONCRETE – 6" THICK.
6. ALL PIPING THROUGH CONCRETE SHALL BE DOUBLE WRAPPED WITH 20 MIL PLUMBERS TAPE.
7. ALL EXPOSED METAL TO BE PRIMED AND PAINTED WITH RUST PREVENTIVE PAINT.
8. ENCLOSURE DIMENSIONS MAY VARY TO SUIT EQUIPMENT TYPE.
9. ATTACH 1 1/2"X 4" STEEL PLATE FOR SITE ADDRESS.

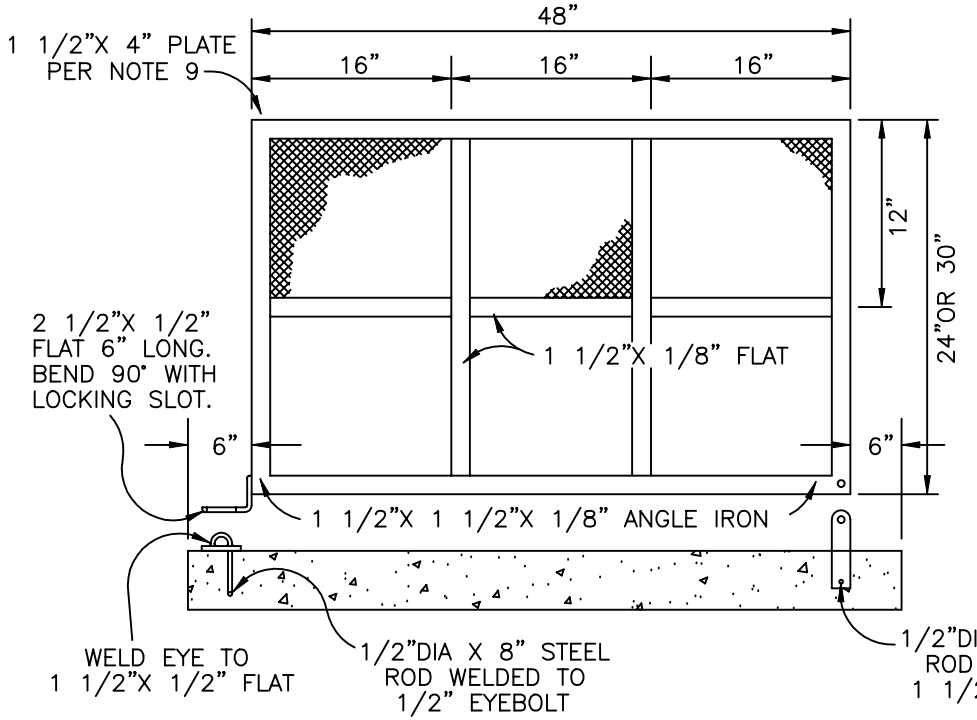

FRONT VIEW

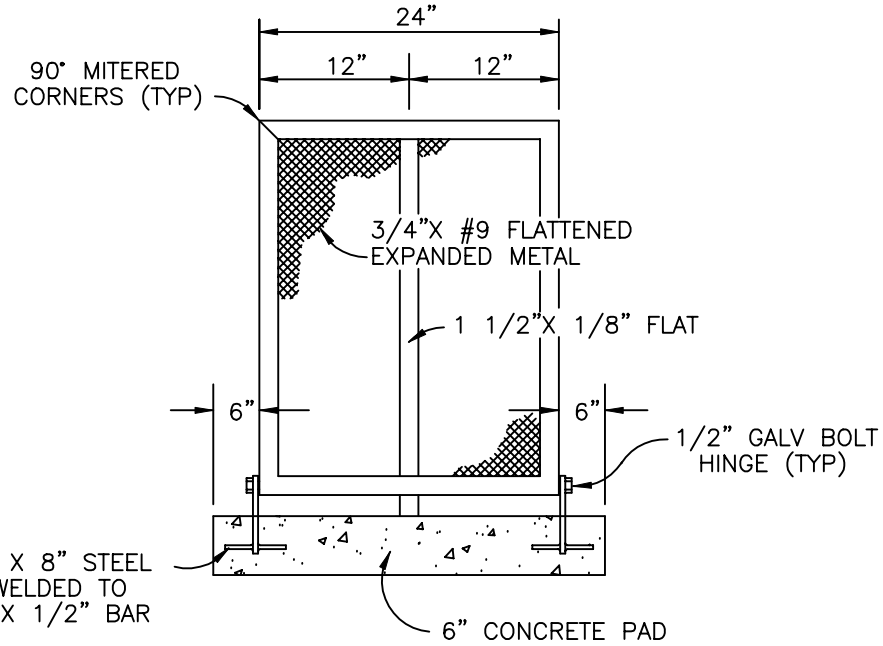

END VIEW

REF. & REV.
AUG. 2002

CITY OF FRESNO

W – 15