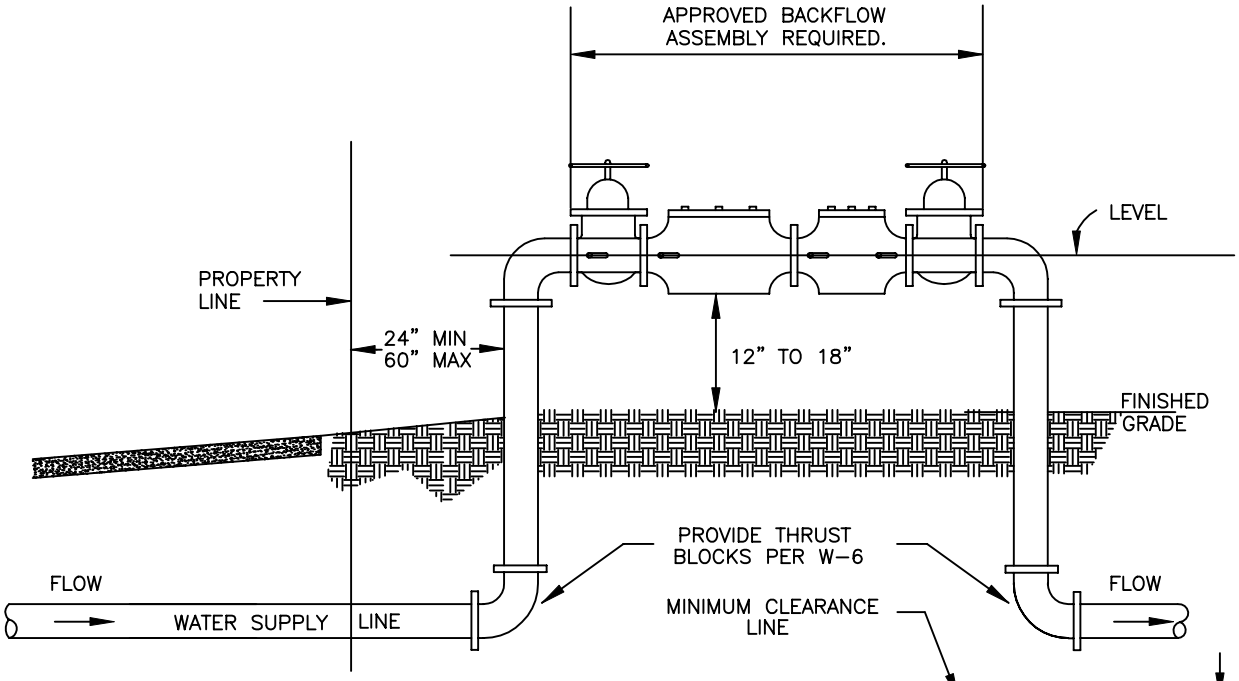


## MIN. CLEARANCE

| SIZE DC | A | B | C |
|---|---|---|---|
| 1" TO 3" | 12" | 24" | 12" |
| 4" & UP | 24" | 24" | 12" |

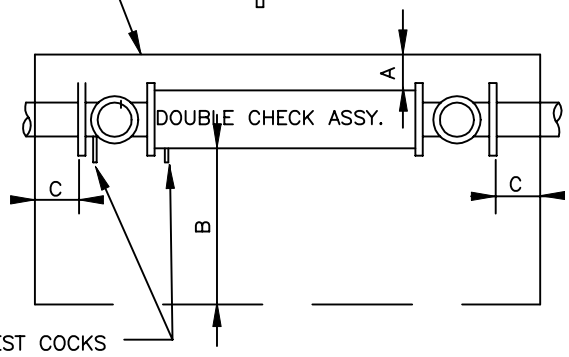


GENERAL NOTES:

1. RESILIENT SEATED SHUT OFF VALVES AND TEST COCKS ARE REQUIRED.
2. NO TAPS, TEES OR CONNECTIONS OF ANY KIND ARE PERMITTED BETWEEN THE WATER METER AND THE BACKFLOW ASSEMBLY.
3. PROTECTION FROM FREEZE DAMAGE MAY BE REQUIRED IN EXPOSED AREAS.
4. ASSEMBLY MUST BE ACCESSIBLE FOR TESTING AND MAINTENANCE PER FRESNO MUNICIPAL CODE.
5. ASSEMBLY TO BE THE SAME SIZE AS THE WATER SUPPLY LINE PER UNIFORM PLUMBING CODE.
6. PRESSURE LOSS THROUGH ASSEMBLY MUST BE INCLUDED IN PRESSURE LOSS CALCULATIONS FOR SIZING OF THE WATER SYSTEM PER UNIFORM PLUMBING CODE.
7. MINIMUM CLEARANCES AROUND ASSEMBLY MUST BE MAINTAINED. REFER TO MINIMUM CLEARANCE CHART ON THIS PAGE.
8. INSTALL A MINIMUM OF ONE UNION IN THE PIPING SYSTEM WITHIN 12 INCHES OF THE ASSEMBLY – 3/4 THRU 2" SIZES.
9. DRAINAGE TO EXTERIOR OF THE BUILDING IS REQUIRED WHEN ASSEMBLY IS INSTALLED INSIDE.
10. ANY DEVIATION FROM THESE REQUIREMENTS SHALL BE APPROVED BY THE WATER SYSTEM MANAGER PRIOR TO INSTALLATION.

| DOUBLE CHECK VALVE INSTALLATION | REF. & REV. AUG. 2002 | CITY OF FRESNO W-12 |
|---|---|---|