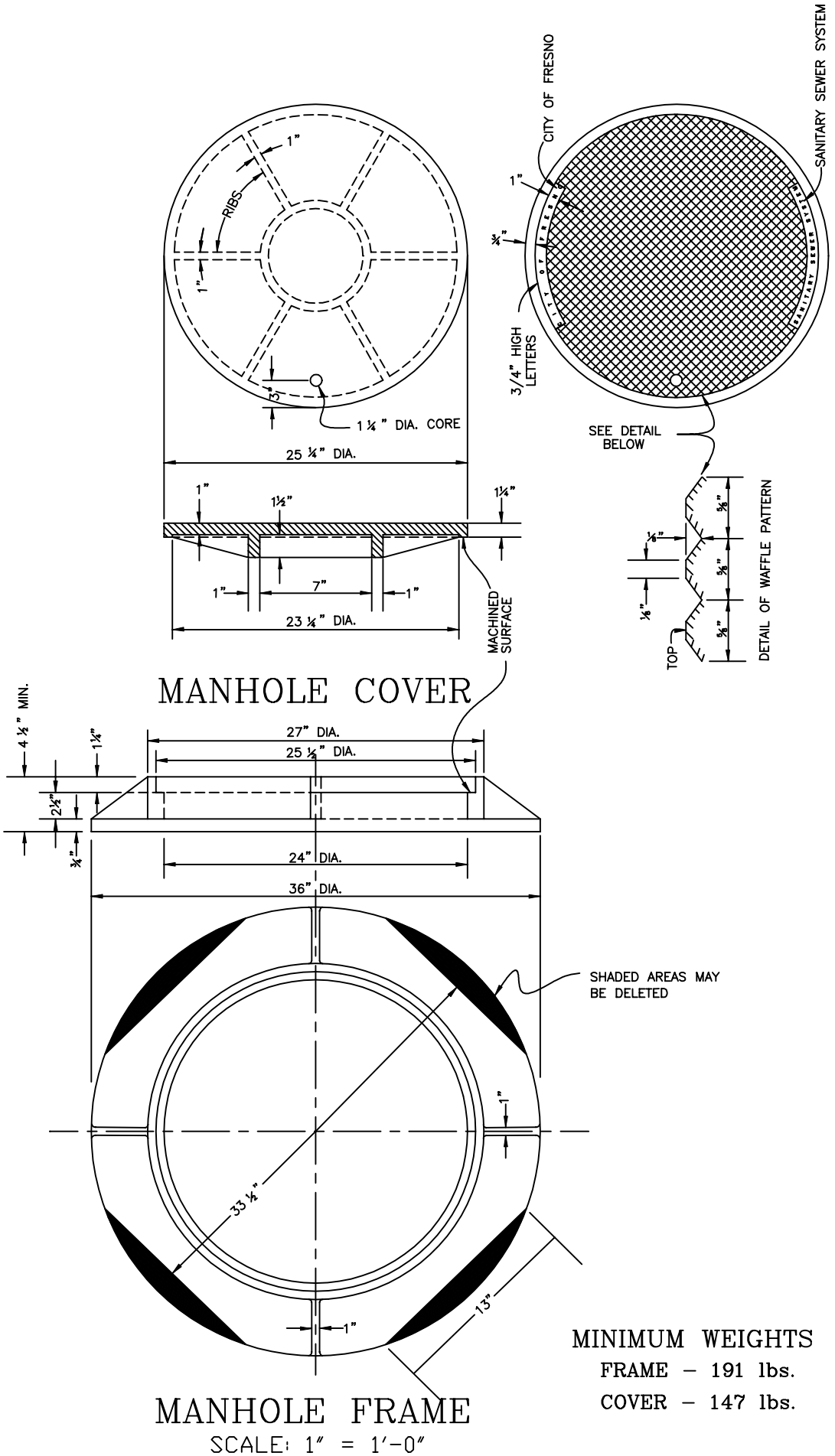

MINIMUM WEIGHTS

FRAME – 191 lbs.

COVER – 147 lbs.

CAST IRON MANHOLE FRAME & COVER	REF. & REV. AUG. 2002	CITY OF FRESNO S–5