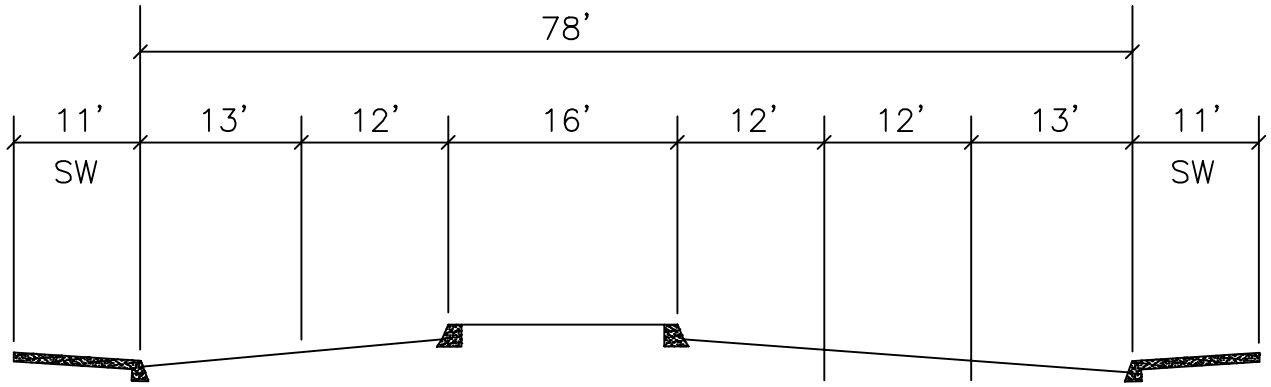

24' TREE SPACING IN SIDEWALK
(TREE WELLS AT 24' O.C.)
(SPECIES TO BE DETERMINED)

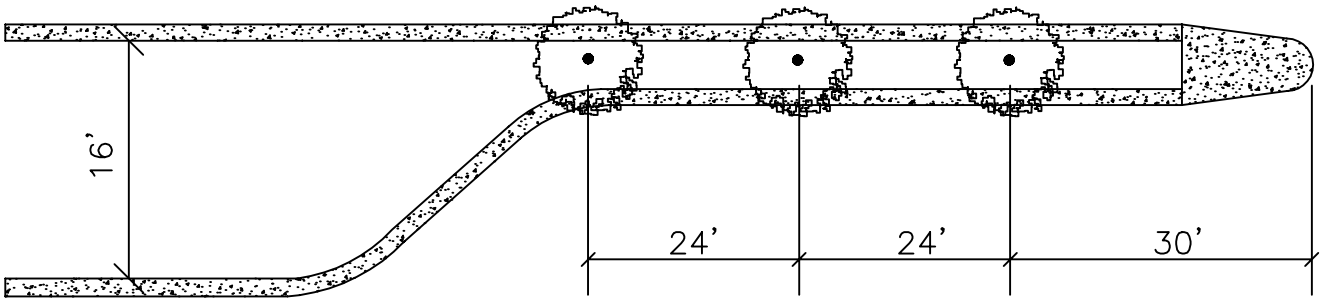

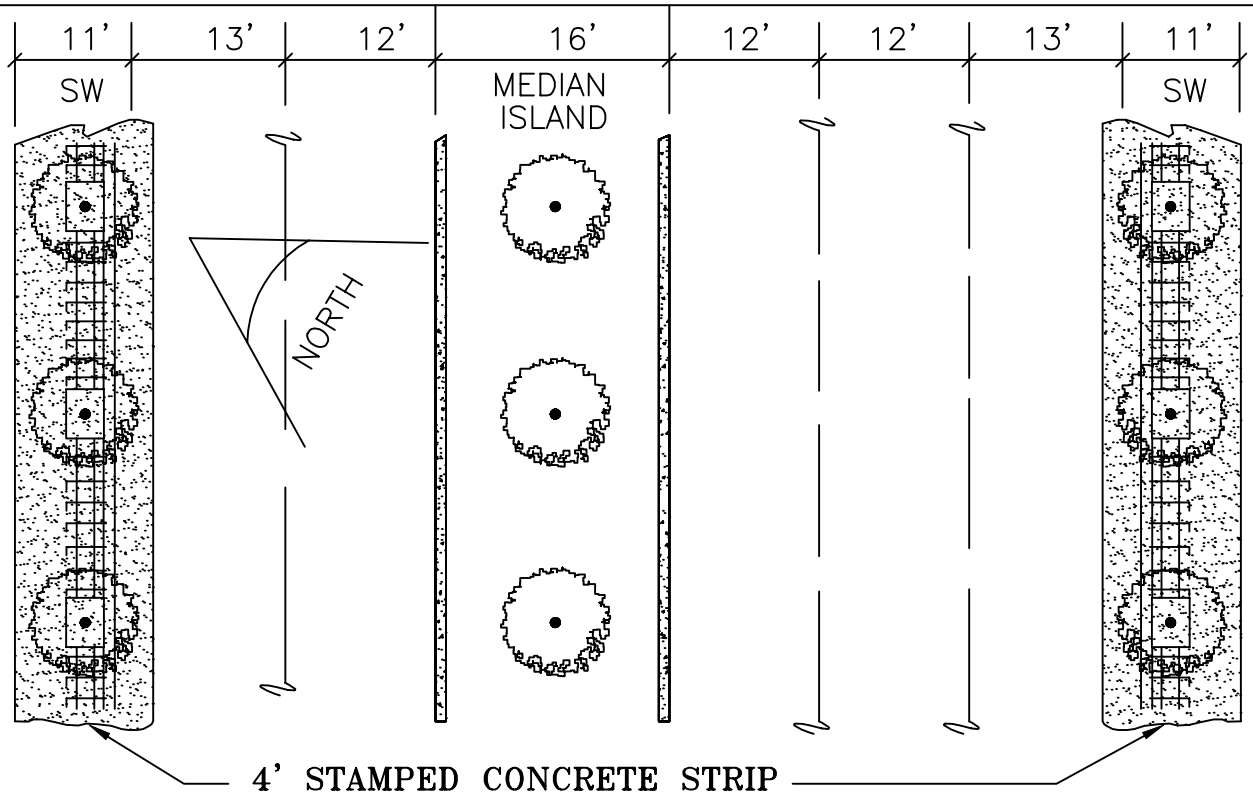

FRESNO ST. BLVD. TREATMENT BROADWAY TO DIVISADERO	REF. & REV. AUG. 2002	CITY OF FRESNO P-72