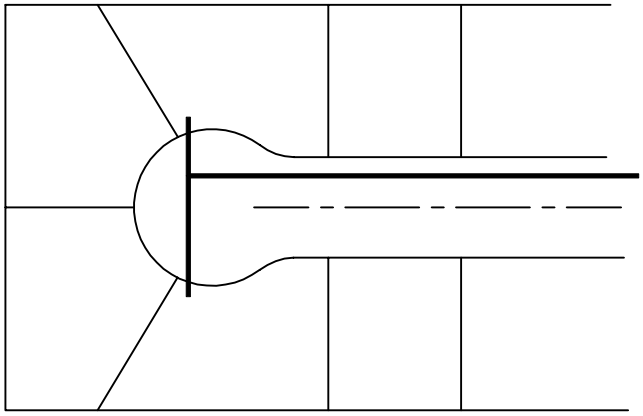

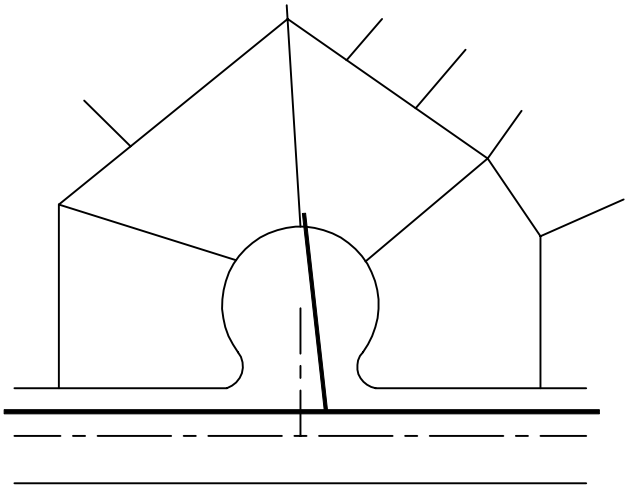

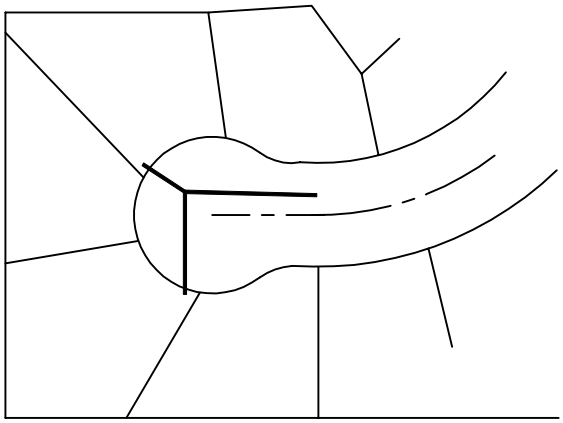

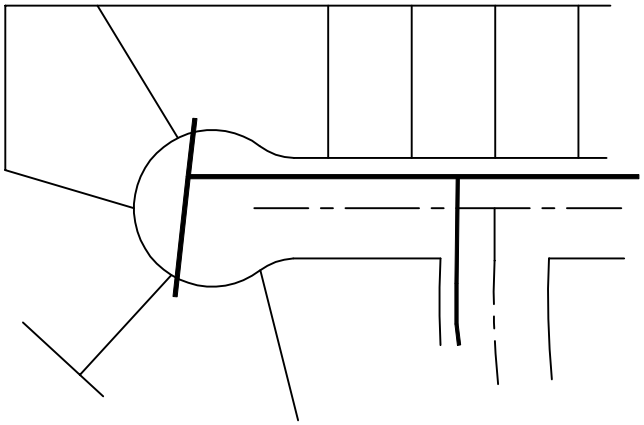

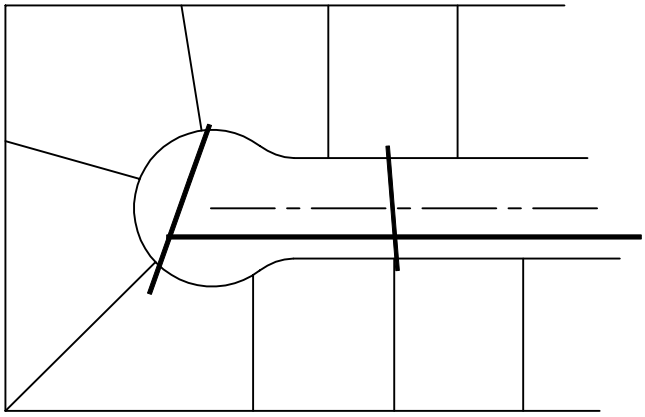

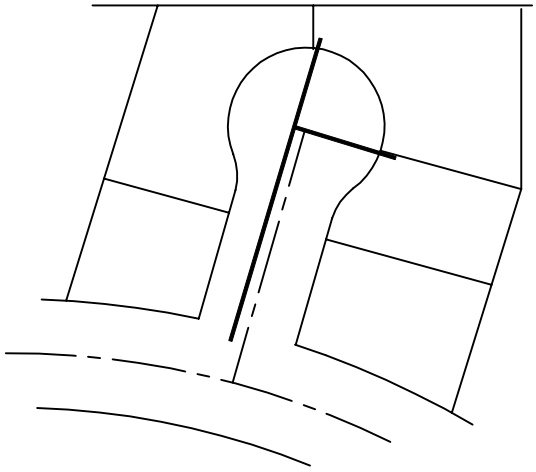

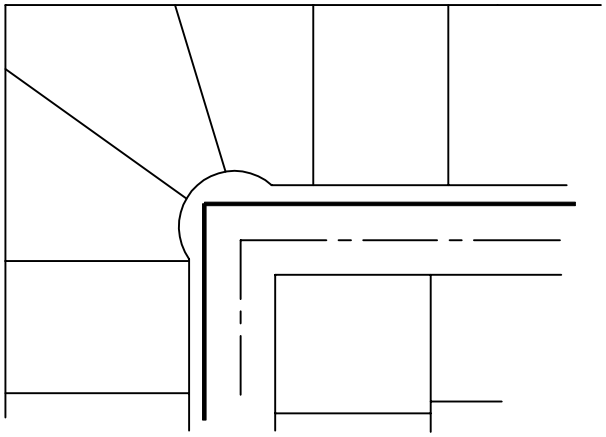

TRENCH LOCATION CATV	SUGGESTED LAYOUT FOR CUL-DE-SACS	REF. & REV. AUG. 2002	CITY OF FRESNO P-66