NOTE
CITY ENGINEER MAY PERMIT A CURVILINEAR DESIGN. PRECISE DATA SHALL BE PROVIDED TO STAKE THE ALIGNMENT AND SET APPROPRIATE GRADES.

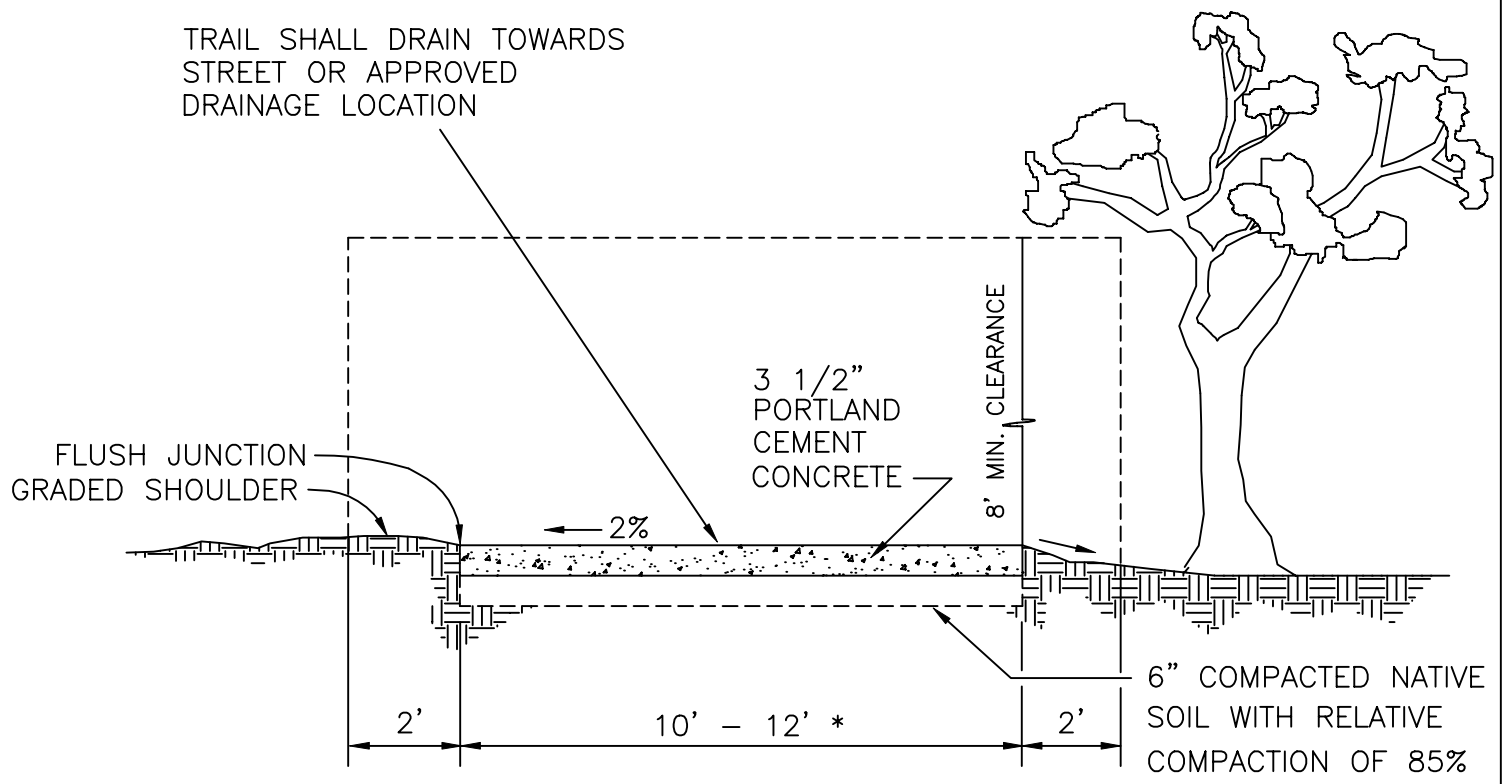

* TO BE SPECIFIED BY THE CITY ENGINEER

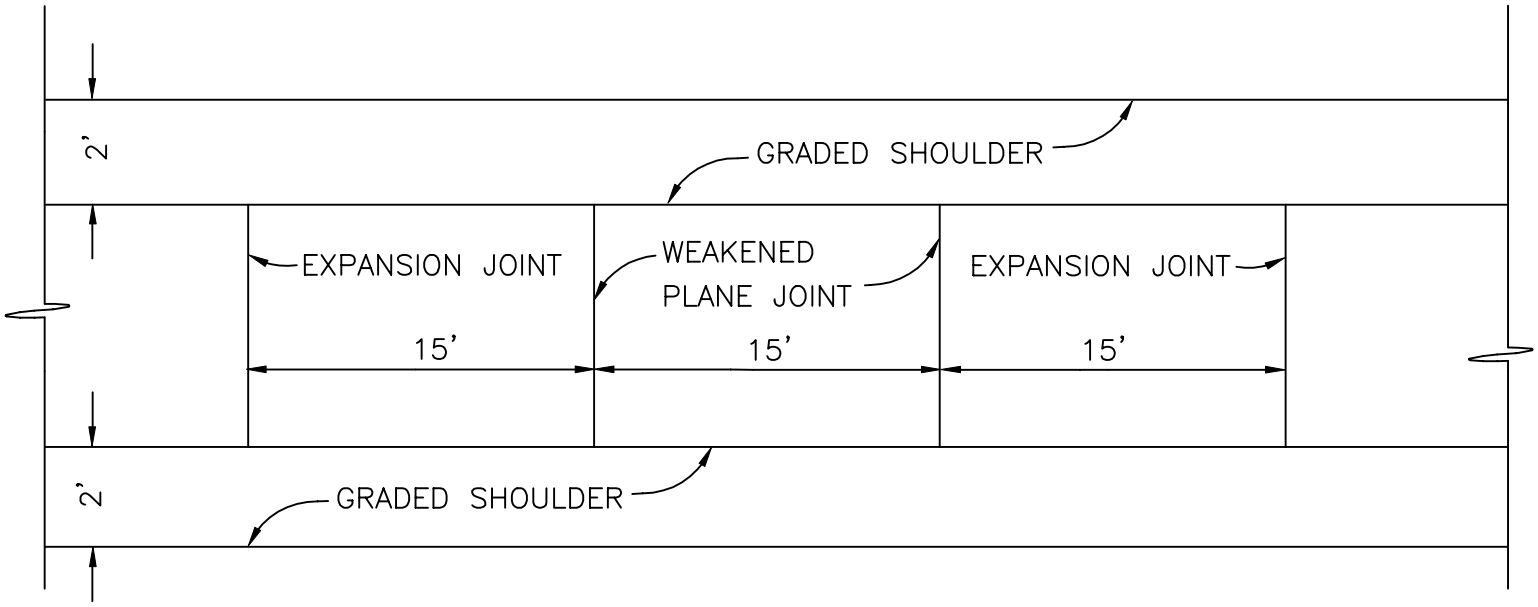

MULTI–PURPOSE TRAIL DETAILS	REF. & REV. AUG. 2002	CITY OF FRESNO P–59