( ) DENOTES ONE HALF MILE LOCAL STREET DIMENSIONS.

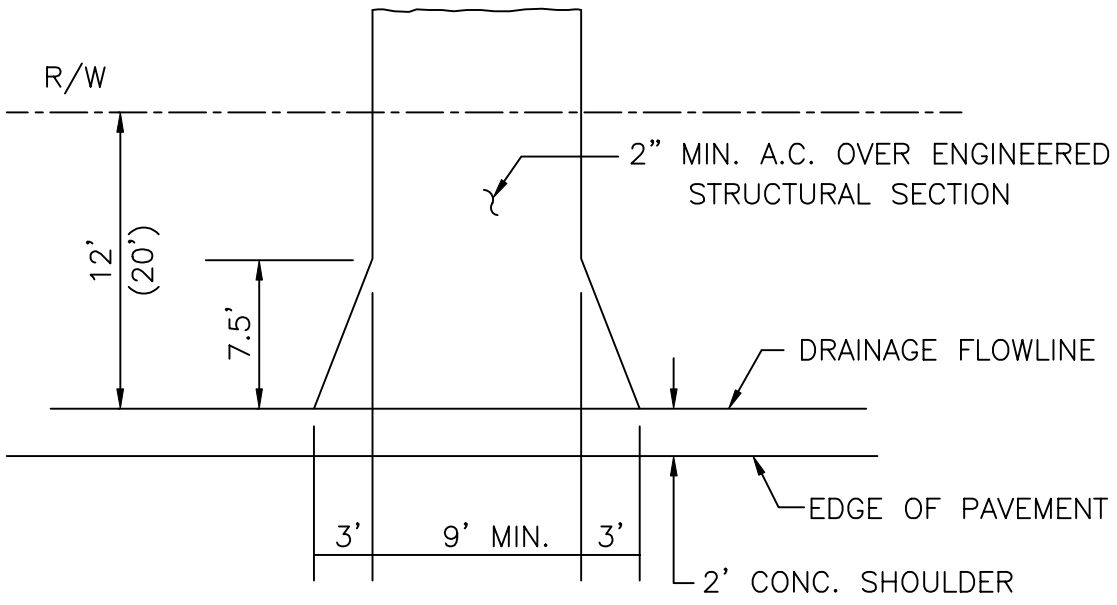

DRIVEWAY STANDARD

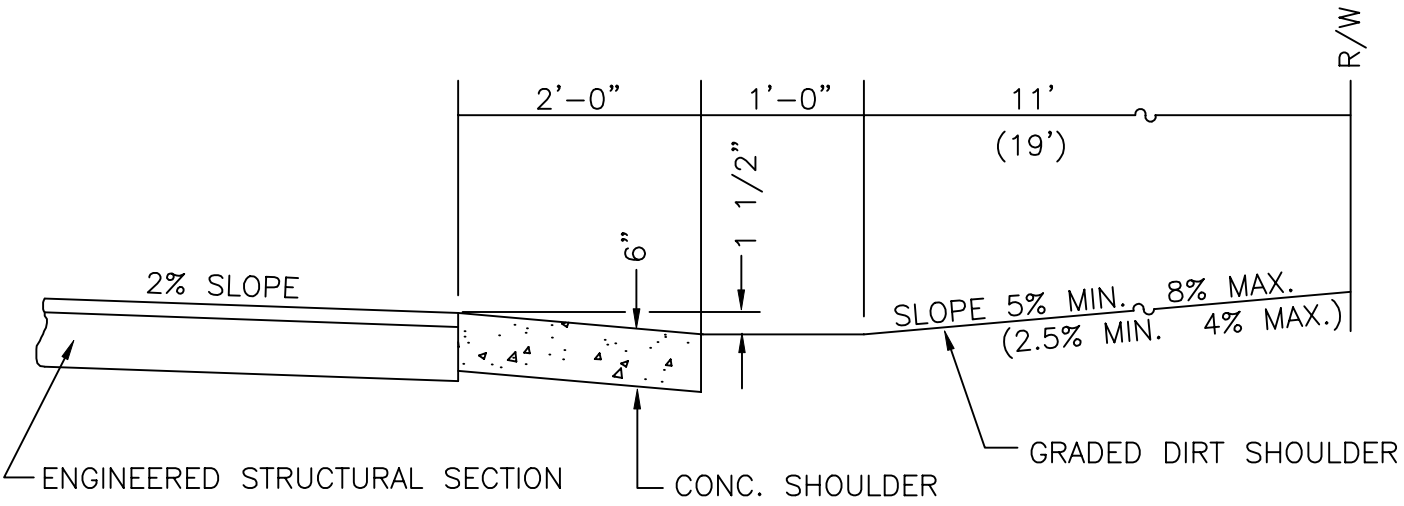

SHOULDER GRADING DETAIL

DETAILS FOR MODIFIED STREETS	REF. & REV. AUG. 2002	CITY OF FRESNO P-56