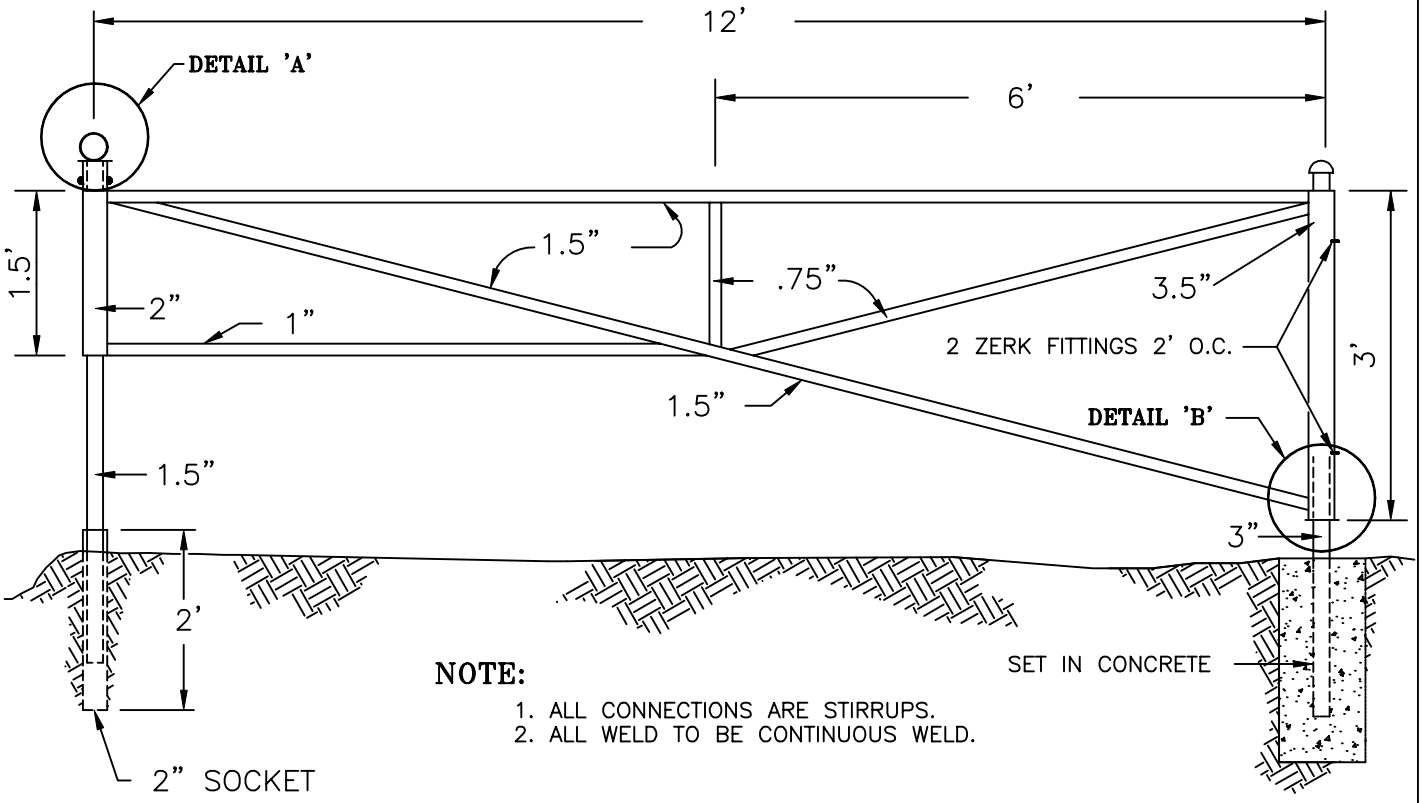

NOTE:

1. ALL CONNECTIONS ARE STIRRUPS.
2. ALL WELD TO BE CONTINUOUS WELD.

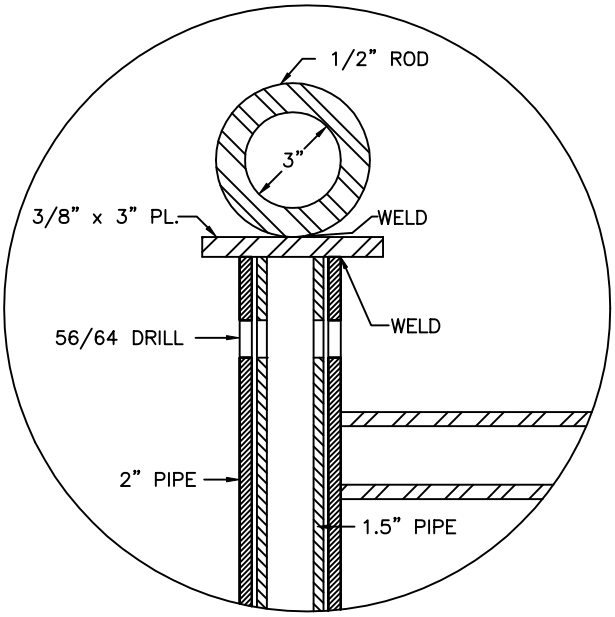

DETAIL 'A'

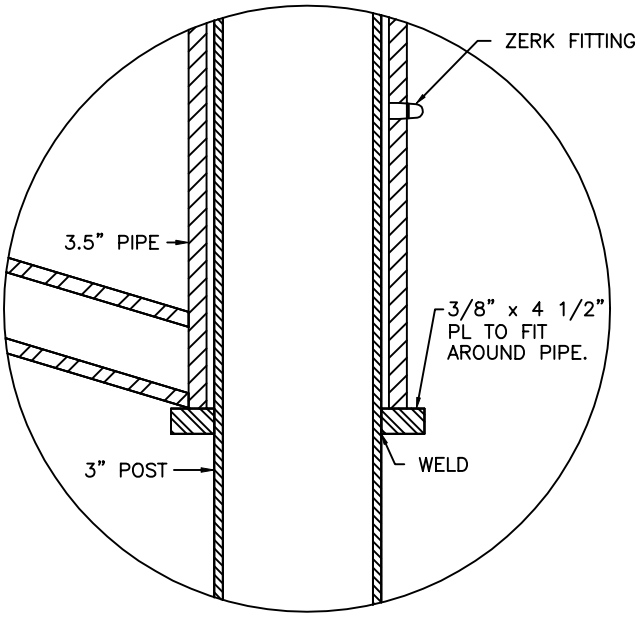

DETAIL 'B'

DETAIL SCALE: 1/4" = 1"

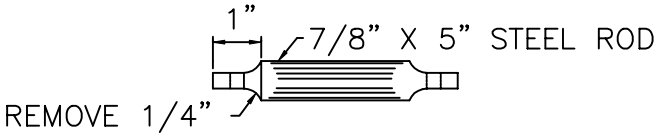

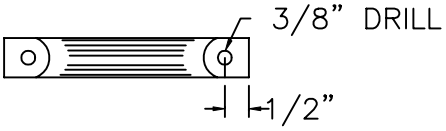

ACCESS RAMP GATE	REF. & REV. AUG. 2002	CITY OF FRESNO P-49