DRIVEWAY OPENING AND CLEARANCE REQUIREMENTS

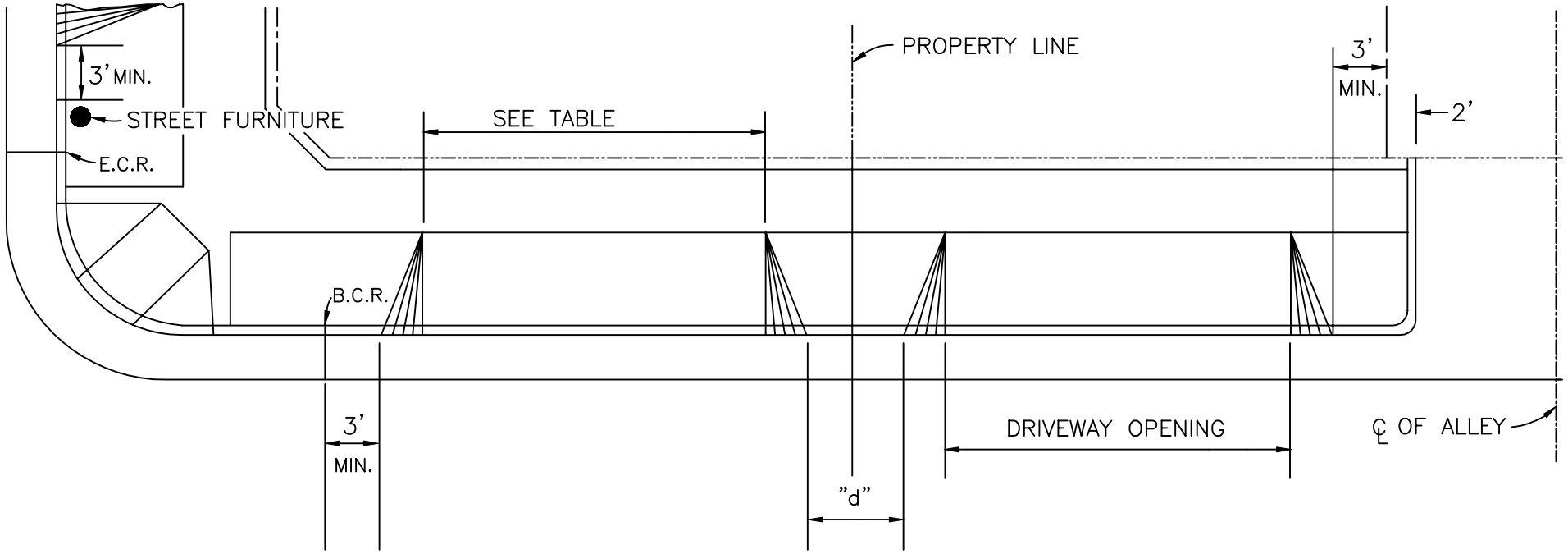

DRIVEWAY OPENING

	MINIMUM		MAXIMUM	
STREET TYPE	MAJOR STREET	LOCAL STREET	MAJOR STREET	LOCAL STREET
SINGLE-FAMILY RESIDENTIAL DRIVE	18'	12'	24' ③	35'
ALL OTHER TWO-WAY	30'	24'	35' ④	35'
ONE-WAY ENTRANCE	18'	15'	24'	24'
ONE-WAY EXIT	12'	12'	24'	24'

NOTES:

1. NO MORE THAN 60% OF STREET FRONTAGE SHALL BE CONSTRUCTED AS DRIVEWAY OPENINGS.
2. "d" = 6' MINIMUM AND LESS THAN 12' OR GREATER THAN 20'.
3. CITY TRAFFIC ENGINEER MAY APPROVE 35' (OVER 35', P.W. DIRECTOR APPROVAL REQUIRED).
4. IN COMMERCIAL, INDUSTRIAL, AND MULTI-FAMILY DEVELOPMENTS, CITY TRAFFIC ENGINEER MAY APPROVE 40'. (OVER 40', P.W. DIRECTOR APPROVAL REQUIRED.)

REF. & REV. AUG. 2002

CITY OF FRESNO

P-4