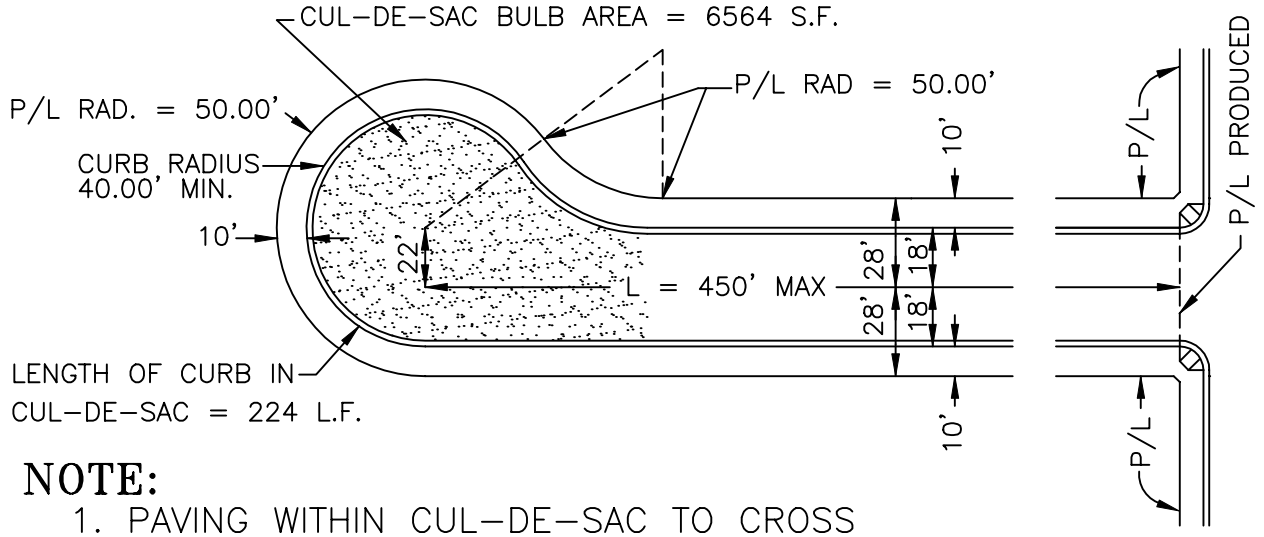

NOTE:

1. PAVING WITHIN CUL-DE-SAC TO CROSS STREET GUTTER LINE SHALL BE A MINIMUM OF 2"A.C. OVER 4"A.B. OR 4"A.C. OVER 6"C.N.S.

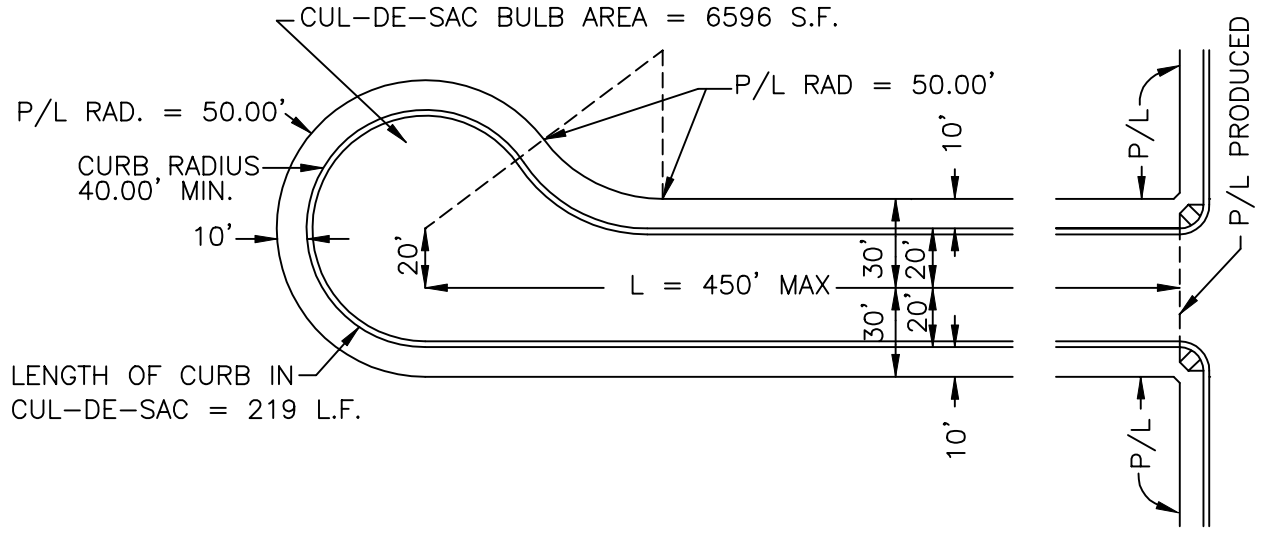

STREET

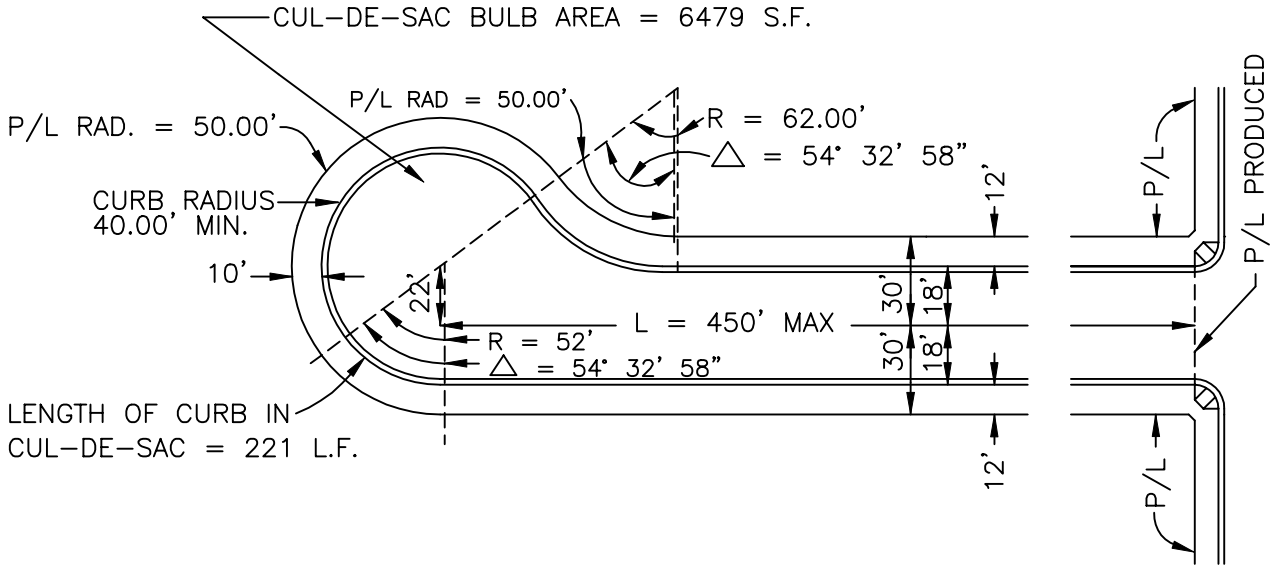

CROSS

STANDARD CUL-DE-SAC	REF. & REV. AUG. 2002	CITY OF FRESNO P-19