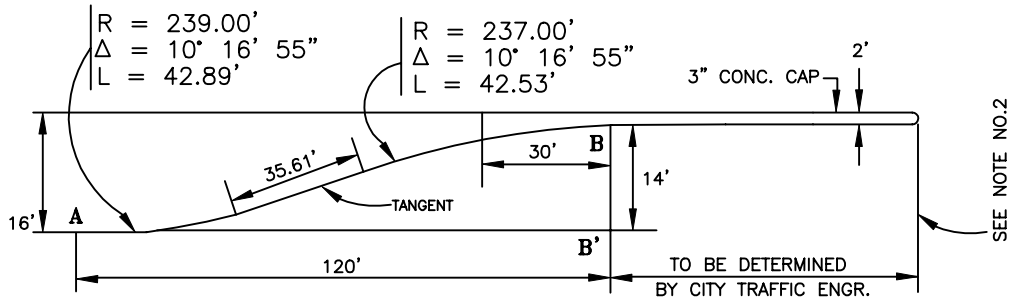

CURVE TABLE	
DIST. FROM POINT "A"	OFFSET B–B' = 14'
0'	0.00'
10'	0.21'
20'	0.84'
30'	1.89'
40'	3.37'
42.66' (TANGENT)	3.84'
50'	5.17'
60'	6.98'
70'	8.80'
77.70'	10.19'
80'	10.60'
90'	12.09'
100'	13.16'
110'	13.79'
120'	14.00'

NOTES:

1. END CONCRETE CAP WHERE CURB FACES ARE GREATER THAN 6' APART.
2. NOSE SHALL BE A MINIMUM OF 10' FROM PRODUCTION OF CROSS STREET EXTREME OUTER PROPERTY LINE.
3. CONCRETE GUTTER TO BE USED WHERE REQUIRED.
4. DEPENDS UPON WIDTH OF CENTER ISLAND.

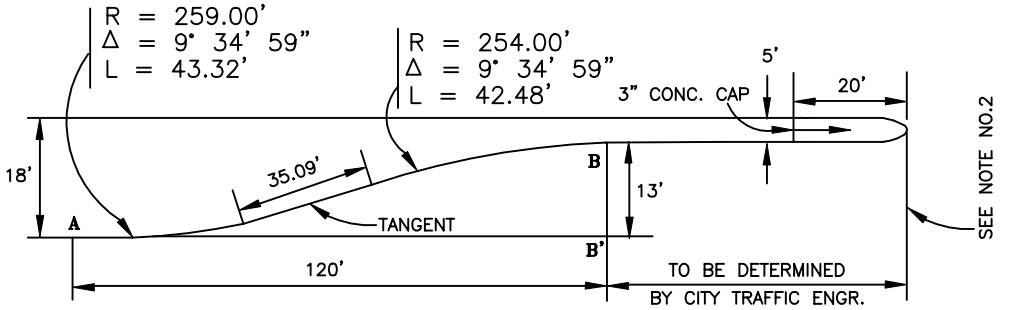

CURVE TABLE	
DIST. FROM POINT "A"	OFFSET B–B' = 13'
0'	0.00'
10'	0.19'
20'	0.77'
30'	1.74'
40'	3.11'
43.12' (TANGENT)	3.61'
50'	4.77'
60'	6.46'
70'	8.16'
77.71'	9.46'
80'	9.83'
90'	11.22'
100'	12.21'
110'	12.80'
120'	13.00'

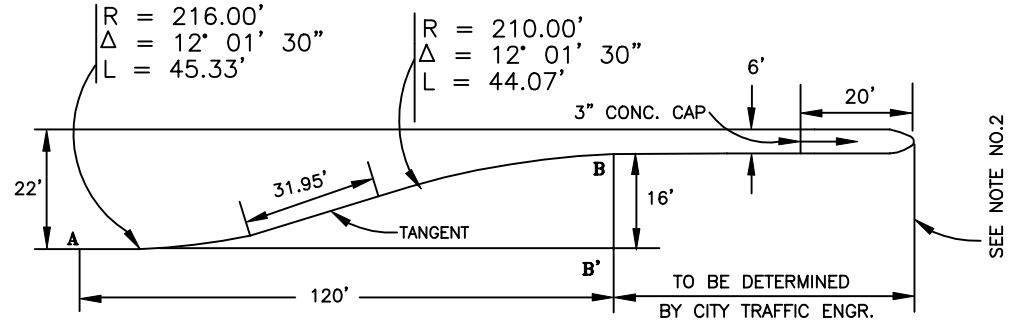

CURVE TABLE	
DIST. FROM POINT "A"	OFFSET B–B' = 16'
0'	0.00'
10'	0.23'
20'	0.93'
30'	2.09'
40'	3.74'
45.00' (TANGENT)	4.74
50'	5.80'
60'	7.93'
70'	10.06'
76.25'	11.39'
80'	12.16'
90'	13.85'
100'	15.05'
110'	15.76'
120'	16.00'

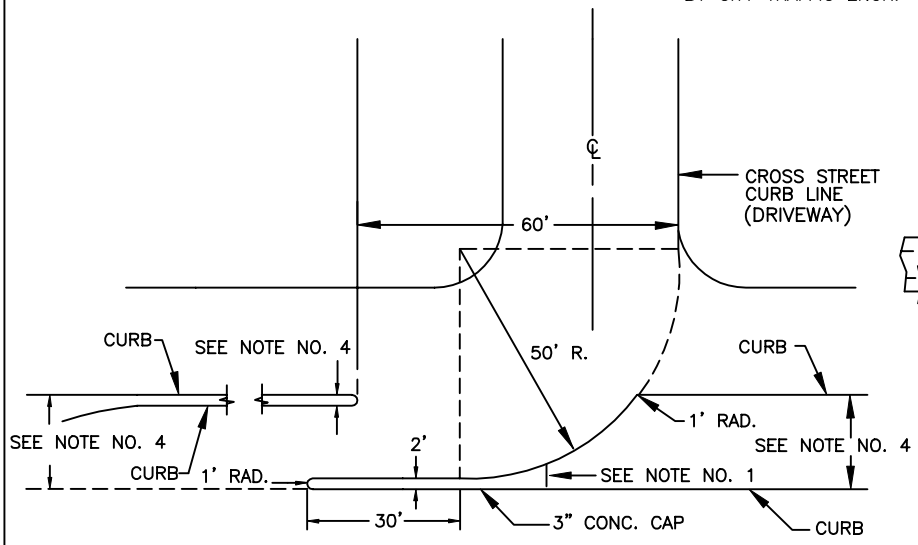

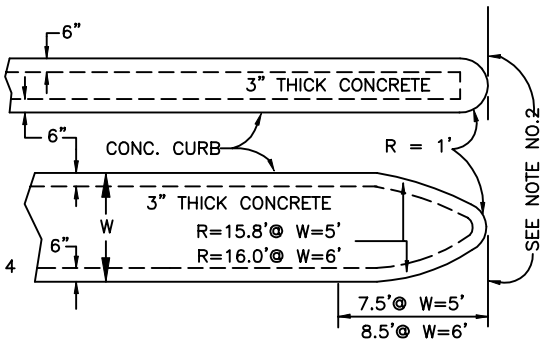

ISLAND NOSE DETAIL

CENTER ISLAND TURNOUT FOR ONE WAY LEFT TURNS ONLY	REF. & REV. AUG. 2002	CITY OF FRESNO P–15