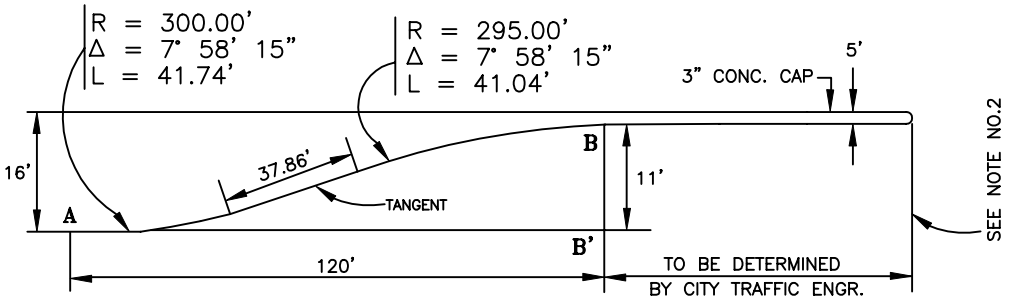

CURVE TABLE	
DIST. FROM POINT "A"	OFFSET B–B' = 11'
0'	0.00'
10'	0.17'
20'	0.67'
30'	1.50'
40'	2.68'
41.60'	2.90'
50'	4.08'
60'	5.48'
70'	6.88'
79.09'	8.15'
80'	8.28'
90'	9.47'
100'	10.32'
110'	10.83'
120'	11.00'

TANGENT

NOTES:

1. END CONCRETE CAP WHERE CURB FACES ARE GREATER THAN 6' APART.
2. NOSE SHALL BE A MINIMUM OF 10' FROM PRODUCTION OF CROSS STREET EXTREME OUTER PROPERTY LINE.
3. CONCRETE GUTTER TO BE USED WHERE REQUIRED.
4. DEPENDS ON WIDTH OF CENTER ISLAND.

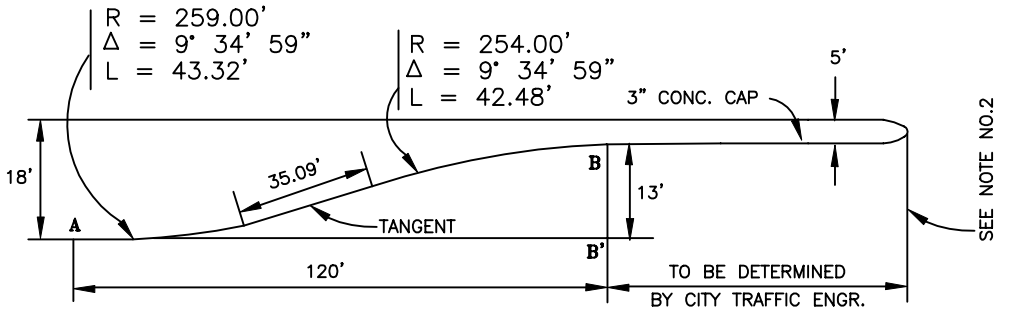

CURVE TABLE	
DIST. FROM POINT "A"	OFFSET B–B' = 13'
0'	0.00'
10'	0.19'
20'	0.77'
30'	1.74'
40'	3.08'
43.12'	3.61'
50'	4.77'
60'	6.46'
70'	8.16'
77.71'	9.46'
80'	9.96'
90'	11.23'
100'	12.21'
110'	12.80'
120'	13.00'

TANGENT

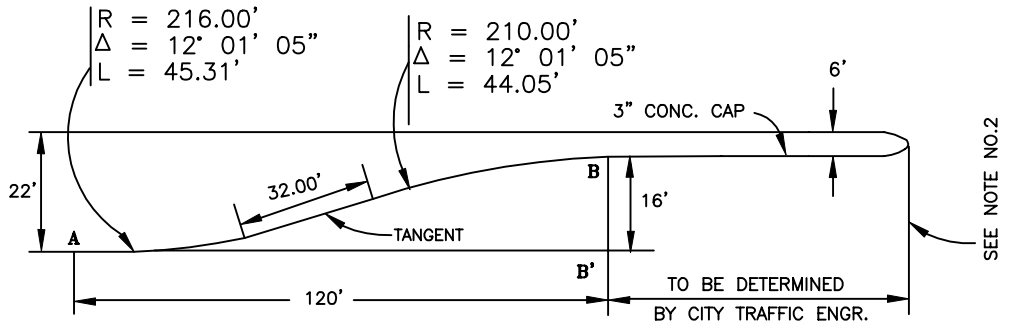

CURVE TABLE	
DIST. FROM POINT "A"	OFFSET B–B' = 16'
0'	0.00'
10'	0.23'
20'	0.93'
30'	2.09'
40'	3.74'
44.97'	4.73'
50'	5.80'
60'	7.93'
70'	10.06'
76.27'	11.40'
80'	12.16'
90'	13.85'
100'	15.05'
110'	15.76'
120'	16.00'

TANGENT

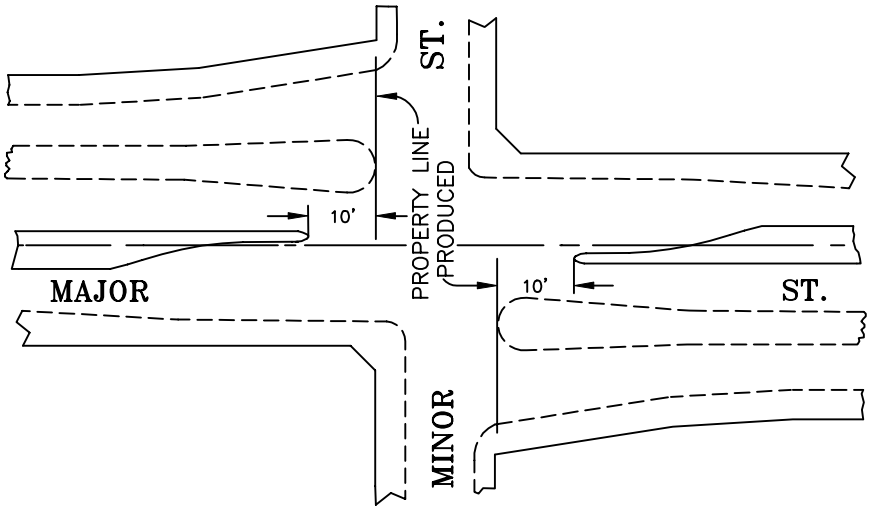

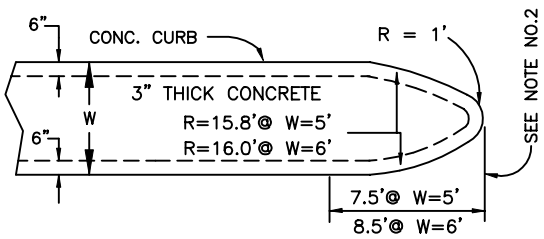

ISLAND NOSE DETAIL

CENTER ISLAND TURNOUT

REF. & REV.
AUG. 2002

CITY OF FRESNO

P–14