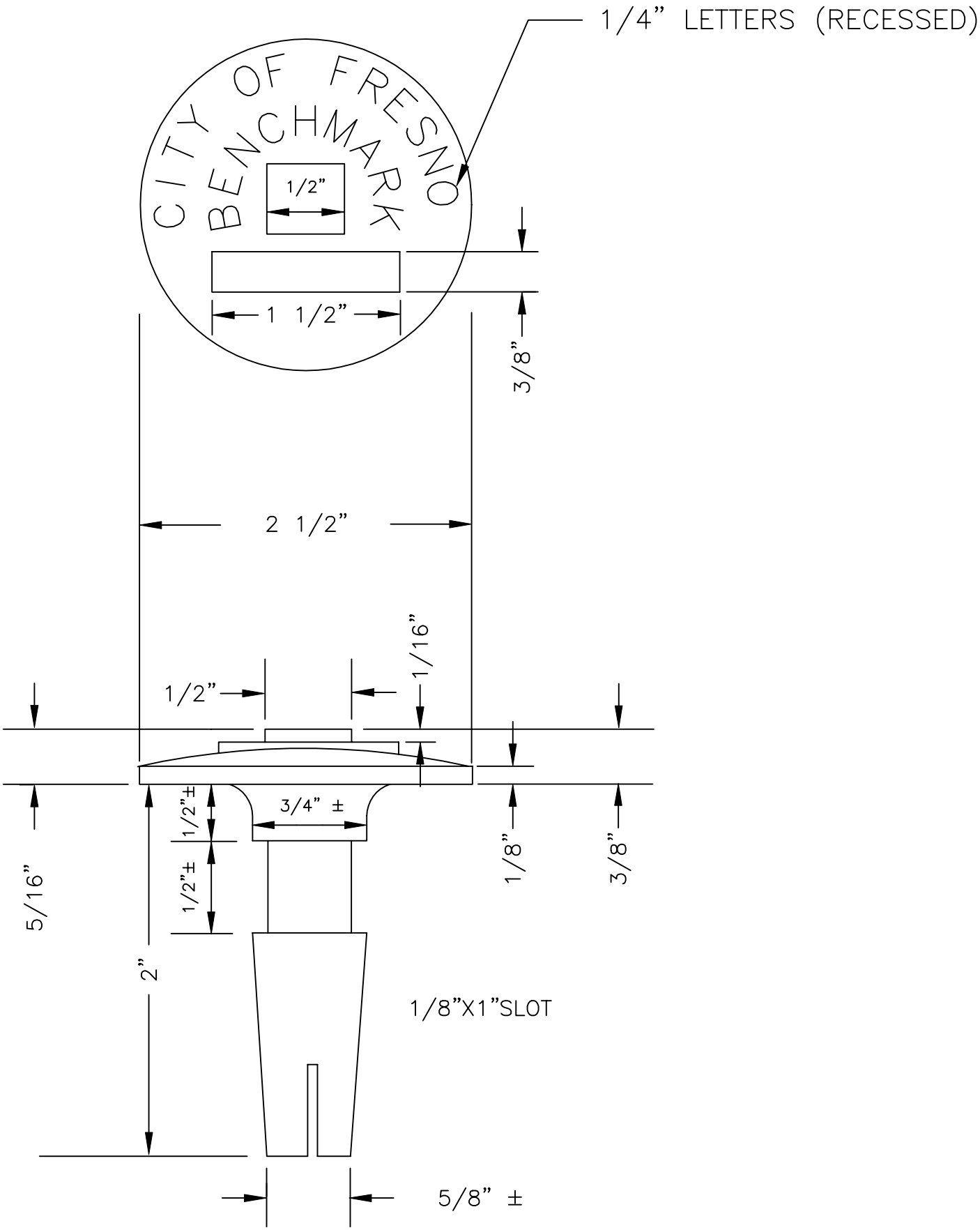

BENCHMARK DETAIL	REF. & REV. AUG. 2002	CITY OF FRESNO P-40