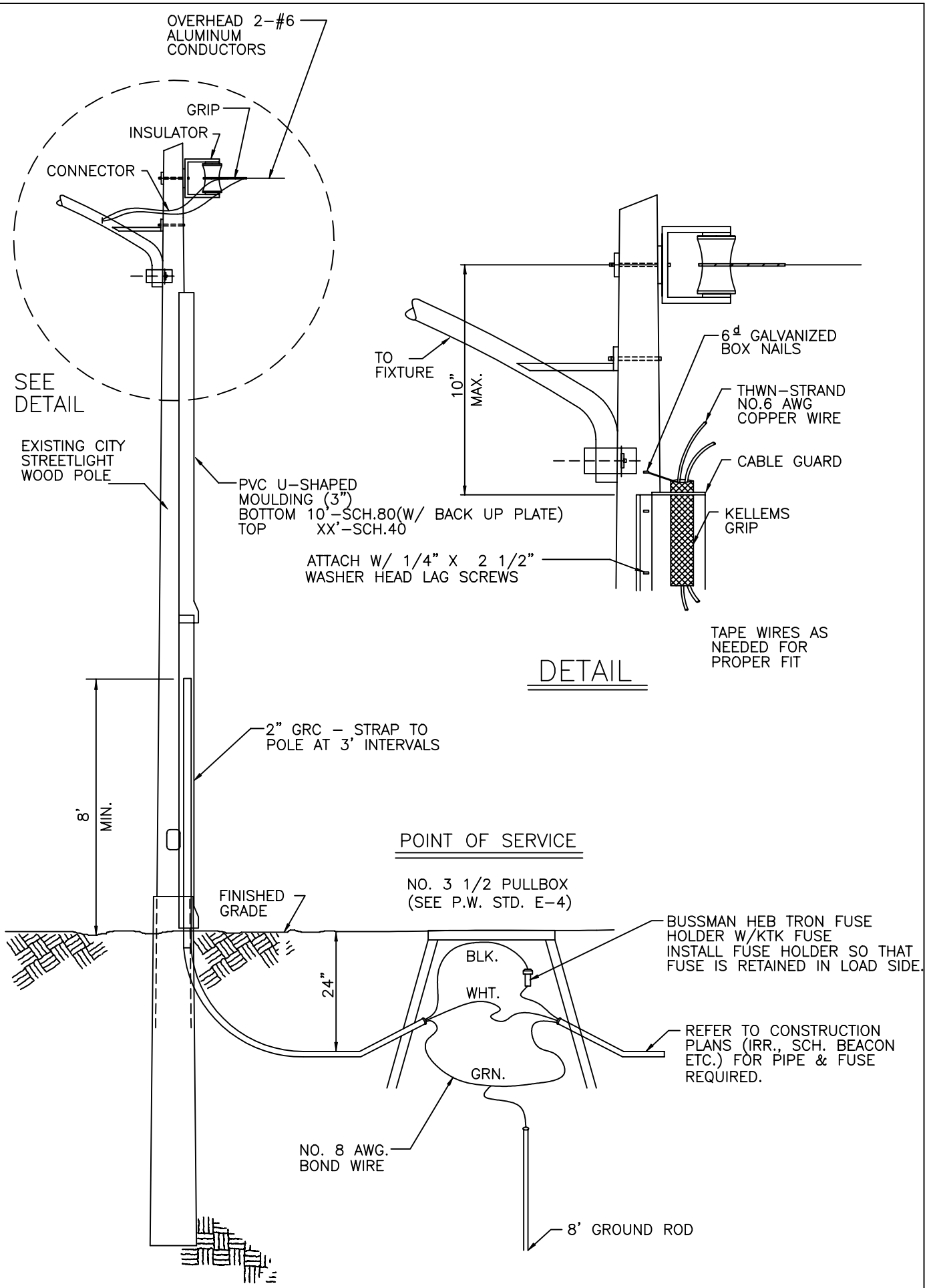

SERVICE RISER DETAIL
FROM EXISTING STREETLIGHT

REF. & REV.
AUG. 2002

CITY OF FRESNO

E-22