NOTE:
SERVICE CABINET SHALL BE TESCO 23-000 LBS UNMETERED OR APPROVED EQUIVALENT.

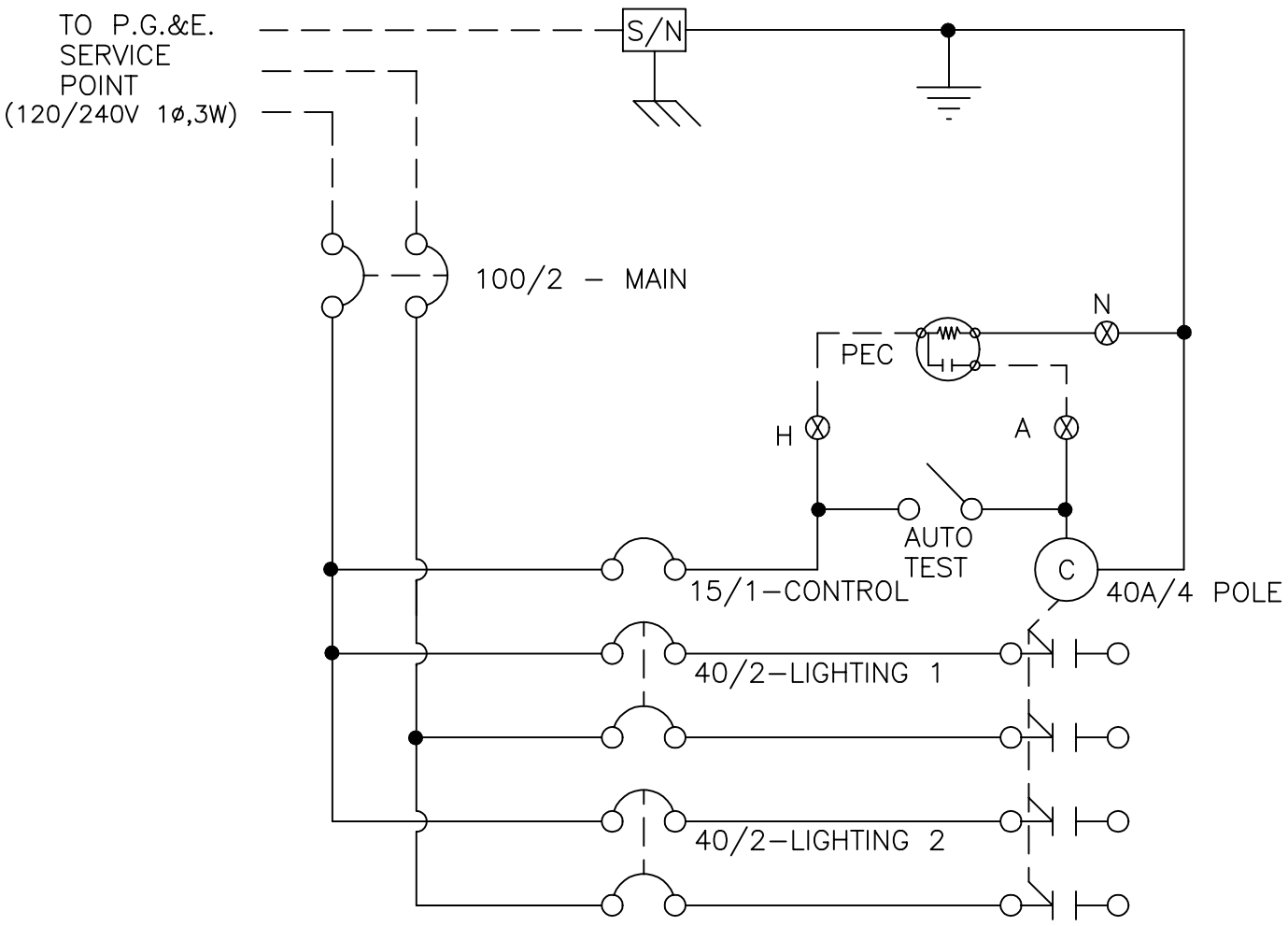

SERVICE PEDESTAL SCHEMATIC

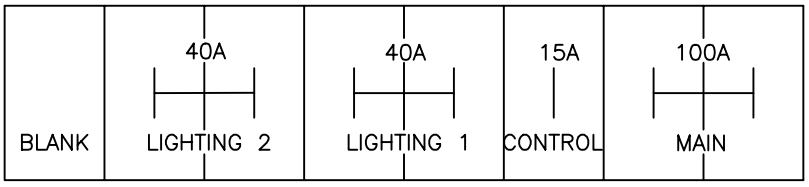

SWITCH LOCATION

STREETLIGHTS–WIRING	REF. & REV. AUG. 2002	CITY OF FRESNO E–18