NOTE:
WIRING RETROFIT FOR TESCO 21-100 LBS METERED/UNMETERED SERVICE CABINET OR APPROVED EQUAL.

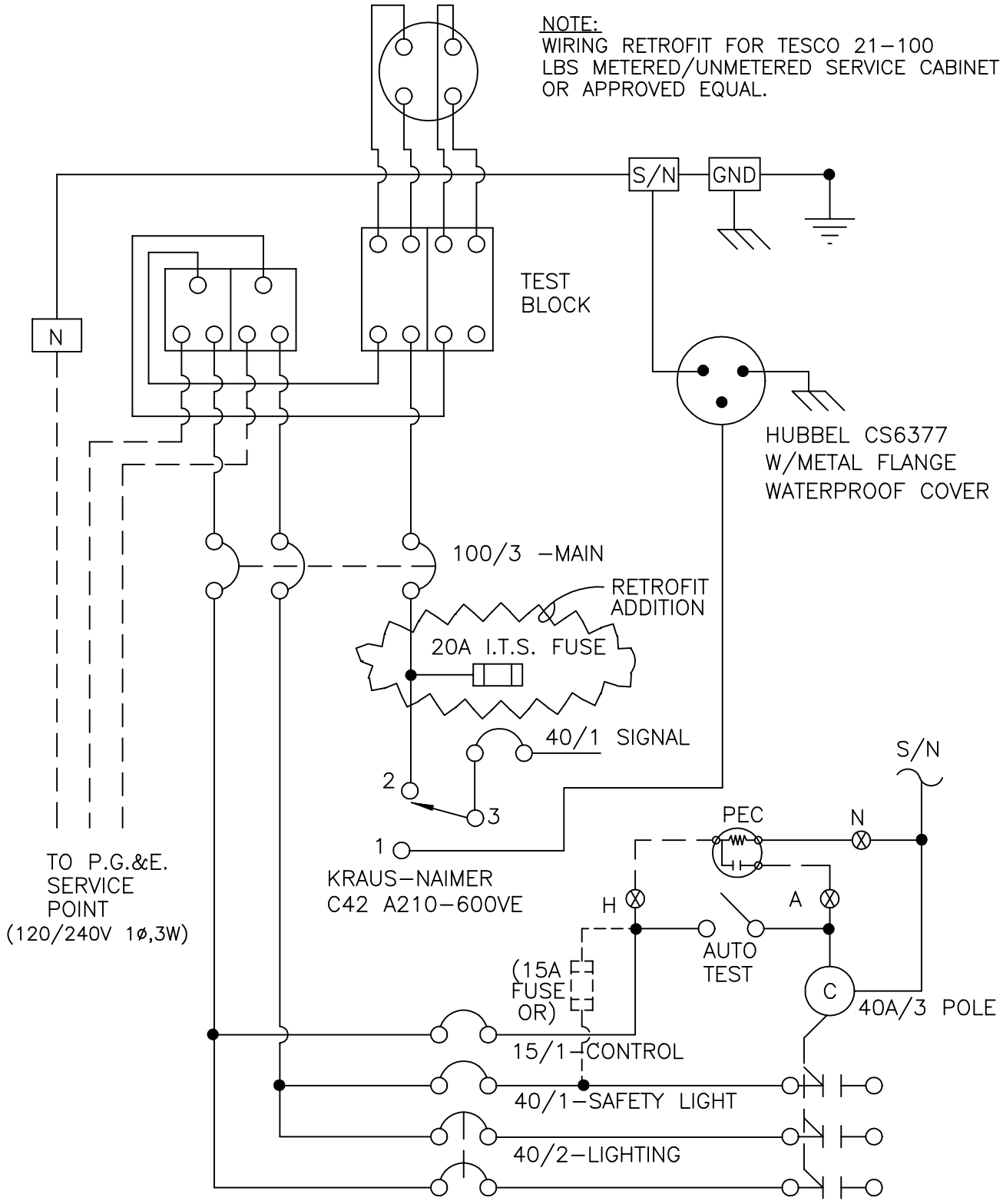

SERVICE PEDESTAL SCHEMATIC

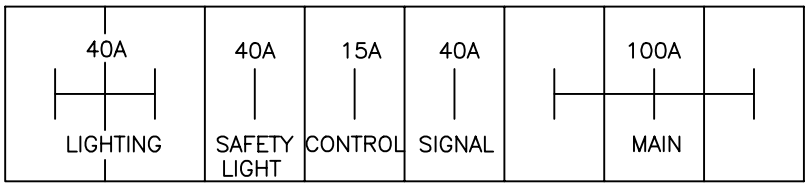

SWITCH LOCATION

SIGNAL LIGHT - WIRING RETROFIT OF EXISTING 21-100 CABINET	REF. & REV. AUG. 2002	CITY OF FRESNO E-16