NOTE:
SERVICE CABINET SHALL BE TESCO 26-100 LBS METERED/UNMETERED OR APPROVED EQUAL.

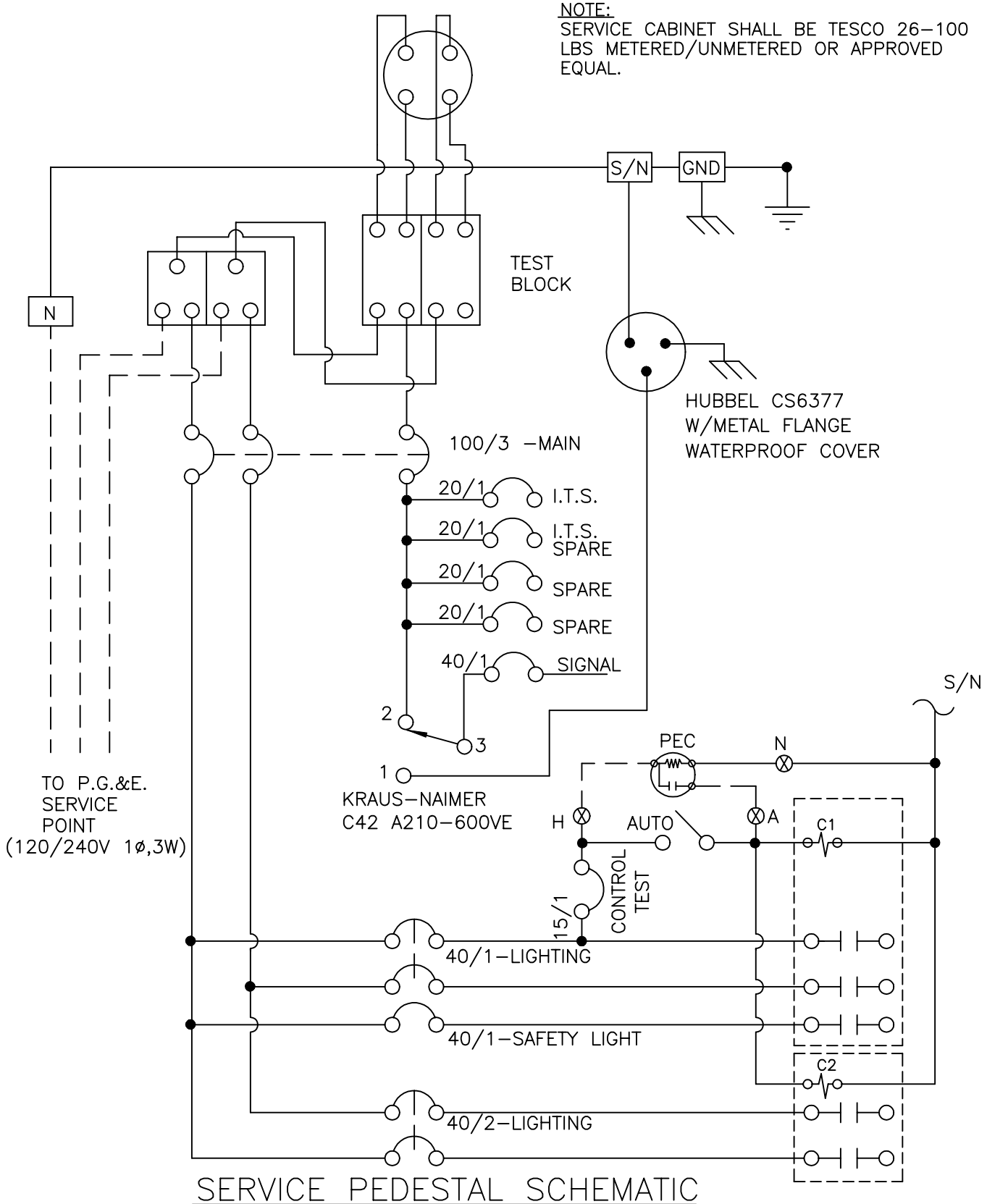

SERVICE PEDESTAL SCHEMATIC

20A	20A	20A	20A	15A	40A	40A	40A	40A		100A	
SPARE	SPARE	I.T.S. SPARE	I.T.S.	CONTROL TEST	LIGHTING	LIGHTING	SAFETY LIGHT	SIGNAL		MAIN	

SWITCH LOCATION

SIGNAL LIGHT - WIRING NEW INSTALLATIONS 26-100 CABINETS	REF. & REV. AUG. 2002	CITY OF FRESNO E-15