City of Fresno — Development Project Contact List

Item	Agency	Contact Information		
		Name	*Email*	*Phone # (Area Code 559)*
Pre-Application Meetings	Planning (DARM)	Joann Zuniga	Joann.Zuniga@fresno.gov	621.8021
Fees:				
Planning Permits	Planning Dept.	Joann Zuniga	Joann.Zuniga@fresno.gov	621.8021
Sewer, Water & Citywide Impact Fees	Public Works	Frank Saburit	Frank.Saburit@fresno.gov	621.8797
Parcel Configuration				
Parcel Mergers, LLA, and Tentative Maps	Planning (DARM)	Will Tackett	Will.Tackett@fresno.gov	621.8063
Final Maps	Public Works	Jon Bartel	Jon.Bartel@fresno.gov	621.8684
Agreements/Covenants				
Community Facilities District	Public Works	Ann Lillie	Ann.Lillie@fresno.gov	621.8690
Cross Access Agreements	Planning (DARM)	Will Tackett	Will.Tackett@fresno.gov	621.8063
Traffic Division Information				
Traffic Impact Study (TIS)	Public Works	Jill Gormley	Jill.Gormley@fresno.gov	621.8792
Traffic Planning (parking lot configuration)	Public Works	Louise Gilio	Louise.Gilio@fresno.gov	621.8678
Public Rights-of-Way				
Official Plan Lines (OPL)	Public Works	Louise Gilio	Louise.Gilio@fresno.gov	621.8678
Deeds	Public Works	Jeff Beck	Jeff.Beck@fresno.gov	621.8560
Street Work Permit	Public Works	James Cozad	James.Cozad@fresno.gov	621.8670
Abandonments & Vacations	Public Works	Alan James	Alan.James@fresno.gov	621.8693
Street Plans	Public Works	Steve Delsid	Steve.Delsid@fresno.gov	621.8725
Community Facilities District (CFD)	Public Works	Ann Lillie	Ann.Lillie@fresno.gov	621.8690
Public Utility Information				
Water/Sewer Connection/s	Dept. of Public Utilities	Doug Hecker	Doug.Hecker@fresno.gov	621.8554
Refuse Enclosures	Dept. of Public Utilities	Chris Weibert	Chris.Weibert@fresno.gov	621.8628
Flood Control	Flood Control District	Debbie Campbell	debbiec@fresnofloodcontrol.org	456.3292
Irrigation Canals	Fresno Irrigation District	Sen Saetern	ssaetern@fresnoirrigation.com	233.7161
Building & Fire Code Information				
Fire Prevention	Fire Dept.	Byron Beagles	Byron.Beagles@fresno.gov	621.4181
Building Codes	Building (DARM)	Brian Leong	Brian.Leong@fresno.gov	621.8082
Historic Preservation	DARM	Karana H. Drayton	Karana@fresno.gov	621.8520
High Speed Train	Planning (DARM)	Bonique Emerson	BoniqueE@fresno.gov	621.8084

Updated on March 10, 2014; DARM

FRESNO METROPOLITAN FLOOD CONTROL DISTRICT DEVELOPMENT REVIEW SERVICE CHARGES

CURRENT ADOPTED SERVICE CHARGE STRUCTURE

- Notice of Requirements Review Service Charge
  - Tracts $43 per acre
  - Permits $35 per acre
- Grading Plan Review Service Charge
  - Tracts $120 per acre
  - Permits $178 per acre
- Storm Drain Plan Review Service Charge – Tracts and Permits
  Fee Calculation – Fee equals the lesser of:
  $300 per acre
  - OR –
  $375 plus 3% of the estimated construction costs of storm drainage facilities, using current drainage fee program unit prices.

SERVICE CHARGE STRUCTURE EFFECTIVE OCTOBER 13, 2014

- Notice of Requirements Review Service Charge*
  - Tracts $43 per acre
  - Permits $35 per acre
- Grading Plan Review Service Charge**
  - Tracts $120 per acre
  - Permits $178 per acre
- Storm Drain Plan Review Service Charge – Tracts and Permits
  Fee Calculation – Fee equals the lesser of:
  $300 per acre
  - OR –
  $375 plus 3% of the estimated construction costs of storm drainage facilities, using current drainage fee program unit prices.

* Minimum Notice of Requirements Review Fee $50
**Minimum Grading Plan Review Fee $100

To receive a full copy of District's comments please pay the Notice of Requirements Review Service Charge in person or by mail at the District office located at 5479 E. Olive Avenue Fresno, CA 93727 (in the back building). Payments may be made with cash or check payable to FMFCD. A voucher will be given upon receipt of payment which must be submitted by you to the City of Fresno or Clovis or County of Fresno in order for the City or County to release a copy of District's comments regarding the project.

RULE 9510 INDIRECT SOURCE REVIEW (ISR) (Adopted December 15, 2005)

1.0 Purpose

The purposes of this rule are to:

1.1 Fulfill the District's emission reduction commitments in the PM10 and Ozone Attainment Plans.

1.2 Achieve emission reductions from the construction and use of development projects through design features and on-site measures.

1.3 Provide a mechanism for reducing emissions from the construction of and use of development projects through off-site measures.

2.0 Applicability

2.1 This rule shall apply to any applicant that seeks to gain a final discretionary approval for a development project, or any portion thereof, which upon full build-out will include any one of the following:

2.1.1 50 residential units;

2.1.2 2,000 square feet of commercial space;

2.1.3 25,000 square feet of light industrial space;

2.1.4 100,000 square feet of heavy industrial space;

2.1.5 20,000 square feet of medical office space;

2.1.6 39,000 square feet of general office space;

2.1.7 9,000 square feet of educational space;

2.1.8 10,000 square feet of government space;

2.1.9 20,000 square feet of recreational space; or

2.1.10 9,000 square feet of space not identified above.

2.2 This rule shall apply to any transportation or transit project where construction exhaust emissions equal or exceed two (2.0) tons of NOx or two (2.0) tons of PM10.

General Notes and Requirements for Entitlement Applications

GENERAL

(Notice: Not all conditions will be applicable to all projects)

1. Approval of this special permit may become null and void in the event that development is not completed in accordance with all the conditions and requirements imposed on this special permit, the Zoning Ordinance, and all Public Works Standards and Specifications. *This special permit is granted, and the conditions imposed, based upon the Operation Statement provided by the applicant. The Operation Statement is material to the issuance of this special permit. Unless the conditions of approval specifically require operation inconsistent with the Operation Statement, a new or revised special permit is required if the operation of this establishment changes or becomes inconsistent with the Operation Statement.* Failure to operate in accordance with the conditions and requirements imposed may result in revocation of the special permit or any other enforcement remedy available under the law. The Development and Resource Management Department shall not assume responsibility for any deletions or omissions resulting from the special permit review process or for additions or alterations to construction plans not specifically submitted and reviewed and approved pursuant to this special permit or subsequent amendments or revisions.

2. No uses of land, buildings, or structures other than those specifically approved pursuant to this site plan shall be permitted.

3. Development shall take place in accordance with the Standards, Specifications, and Standard Drawings of the City of Fresno Public Works Department; http://www.fresno.gov/Government/DepartmentDirectory/PublicWorks/DeveloperDoorway/Technical+Library/StandardSpecificationsandDrawings.htm

4. Development shall take place in accordance with all city, county, state and federal laws and regulations.

5. All proposed building(s) or structure(s) constructed on the property must comply with the prevailing California Building Code Standards.

6. Any building modifications and/or additions not included with this application are not approved with this special permit and would be subject to a new special permit.

7. For projects initiated in response to code enforcement action, the exercise of rights granted by this special permit must be commenced by six months. Completion of the project, including improvements, shall occur by 12 months.

FENCES/WALLS, LANDSCAPING, PARKING

8. Temporary fences to secure projects under construction are allowed. Any temporary fence shall be adequately secured and constructed to prevent overturning due to wind, vandalism, and/or casual contact by the general public. The construction shall be performed in such a manner as to minimize any potential safety hazard, which may occur as a result of improper fence installation or damage to the fence.

9. Future fences shall be reviewed and approved by the Development and Resource Management Department prior to installation.

10. No structures of any kind (*including signs and/or fences*) may be installed or maintained within the required-landscaped areas. No exposed utility boxes, transformers, meters, piping (excepting the

backflow prevention device), etc., are allowed to be located in the landscape areas or setbacks or on the street frontages of the buildings. All transformers, etc., shall be shown on the site plan. The backflow device shall be screened by landscaping or such other means as may be approved.

11. Provide shade calculations on the landscape plan for parking lot shading in accordance with the attached *Development Department, Performance Standards for Parking Lot Shading*, including tree species and tree counts.

12. Disperse trees over the parking lot area to provide 50 percent shading of the parking area surface within 15 years. (This requirement may be reduced to 40 percent for existing development if it is demonstrated that the constraints of an existing site would make it impossible to meet the normal standards.) Trees shall also be planted in the required landscaped area along the periphery of the development in order to shade and enhance adjacent property and public rights-of-way. Refer to the attached "Performance Standards for Parking Lot Shading," for the tree list and further details.

13. Trees shall be maintained in good health. However, trees may not be trimmed or pruned to reduce the natural height or overall crown of the tree, except as necessary for the health of the tree and public safety; or as may otherwise be approved by the Development and Resource Management Department.

14. Landscaping must be in place before issuance of the certificate of occupancy. A Hold on Occupancy shall be placed on the proposed development until such time that landscaping has been approved and verified for proper installation by the Development Services Division. **(Include this note on the site and landscape plans.)**

15. Prior to final inspection, a written certification, signed by a landscape professional approved by the Director, shall be submitted stating that the required landscaping and irrigation system was installed in accordance with the landscaping and irrigation plans approved by the Development Services Division, Development Department.

16. Future tenant improvements shall be reviewed and approved by the Development and Resource Management Department to ensure that adequate off-street parking is provided.

17. The parking lot design must accommodate the provision of trees in accordance with the attached Parking Lot Shading Policy.

18. A minimum number of accessible parking stalls are required for the proposed project per State of California Building Code, "Development Requirements for Handicapped Accessibility."

19. All accessible stalls shall be marked with the international symbol of spaces and a warning that vehicles in violation of Section 10-1017 of the Municipal Code shall be towed away. The international symbol and tow-away warning shall be posted conspicuously on seven-foot poles. **(Include this note on the site plan.)**

20. All accessible parking stalls shall be placed adjacent to facility access ramps or in strategic areas where the handicapped shall not have to wheel or walk behind parked vehicles while traveling to or from accessible parking stalls and ramps. **(Include this note on the site plan.)**

21. Lighting where provided to illuminate parking, sales or display areas shall be hooded and so arranged and controlled so as not to cause a nuisance either to highway traffic or to the living environment. The amount of light shall be provided according to the standards of the Department of Public Works. **Depict all proposed lights on the site plan.**

22. Bicycle parking spaces shall be supplied at a rate of 10% of the automobile spaces provided pursuant to Section 12-306-I-2.1c of the Fresno Municipal Code (FMC). Bicycle parking spaces shall each consist of one slot in a bike rack. They shall be grouped in racks which allow four feet of clearance on all sides. There shall be adequate space between rack slots to park, lock, and remove bicycles. Bicycle parking spaces and the required four-foot clearance shall be protected from motor vehicle encroachment by means of fixed barriers not less than six inches or more than three in height. Bicycle parking spaces shall not encroach into pedestrian ways, landscaped areas, or other required open spaces, and shall be located proximal to structures.

23. All general provisions of Section 12-306-I of the FMC shall apply to all parking areas. http://library.municode.com/HTML/14478/level3/MUCOFR_CH12LAUSPLZO_ART3GECOAPZO.html#MUCOFR_CH12LAUSPLZO_ART3GECOAPZO_S12-306PRDEST

SIGNAGE

24. All future signs shall be architecturally compatible with the proposed building(s). Provide a set of drawings, with descriptive information, including, materials, design and colors to allow for a preliminary assessment of the future signage. It is recommended that you provide a copy of the signage early in the project process to allow for staff comment.

25. Signs, *other than directional signs, if applicable*, are not approved for installation as part of this special permit. **(Include this note on the site plan.)**

26. All proposed signs shall conform to the current sign ordinance. Applications for a sign permit and requirements for submittal are available at the Development and Resource Management Department's Public Front Counter or online at http://www.fresno.gov/Government/DepartmentDirectory/PlanningandDevelopment/Planning/SignsandBanners.htm

27. Window signs are limited to four square feet in area, providing information about hours of operation and emergency, sale or rental information only. Exterior signage such as banners, flags and pennants are prohibited. However, special event banner signs are permitted for 30 days if approved by the Development and Resource Management Department, attached to the building, and not exceeding 32 square feet in area.

28. Permanent window signs over six square feet in area can be submitted for approval under a sign review application.

MISCELLANEOUS

29. Noise levels shall not exceed the decibel levels described in Section 10-102.b of the FMC at anytime, measured at the nearest subject property line. http://library.municode.com/HTML/14478/level3/MUCOFR_CH10REREPUNUREPRCOUS_ART1NORE.html#MUCOFR_CH10REREPUNUREPRCOUS_ART1NORE_S10-102DE

30. There shall be adequate vehicular access from a dedicated and improved street or alley to off-street parking and loading facilities on the property requiring off-street parking and loading. Vehicular and/or pedestrian access shall be provided and shall remain clear at all times.

31. The address listed in the conditions of approval is the 'Official Address' given to the building. If you would like separate suite or unit numbers for a building, provide a floor plan and contact the City of Fresno Development and Resource Management Department for 'Official Addresses'. **Only those**

addresses assigned by the City of Fresno will be recognized as 'Official Addresses'. The United States Post Office will only recognize addresses assigned by the City of Fresno. If a non-official address is given to a building and or/separate suites, the City of Fresno has the authority to charge a fee and have those addresses corrected. In addition, the United States Post Office will cease mail delivery to those addresses that are not 'Official Addresses'.

32. All projects, including projects that involve less than one acre of property, are required to comply with the City of Fresno's Urban Storm Water Quality Management and Discharge Control Ordinance, FMC Chapter 6, Article 7 (FMC Sections 6-701 *et seq.*)

    When a project involves one acre or more of construction activity (including, but not limited to, grading) the developer is required to obtain a stormwater discharge permit for construction, with a Notice of Intent (NOI) filed **prior to** commencement of any grading construction activity. Contact the Fresno office of the California Regional Water Quality Control Board at 559-445-6281 regarding the required NOI and stormwater discharge permit. Additional information on California's construction stormwater regulation may be obtained from the Water Board via the internet: *www.waterboards.ca.gov/water_issues/programs/stormwater/construction.shtml*. Helpful information for preparing and implementing stormwater pollution prevention plans may also be obtained from the California Stormwater Quality Association via its website, *www.casqa.org*

    When a project involves specified nonresidential activities (certain commercial and industrial activities), an ongoing industrial stormwater discharge permit is also required. Contact the Fresno office of the California Regional Water Quality Control Board at 559-445-6281 to find out whether your project/business requires an industrial stormwater discharge permit, and to obtain details on securing this permit. Additional information on industrial stormwater discharge regulation may be obtained from this website: *www.waterboards.ca.gov/water_issues/programs/stormwater/industrial.shtml*, and the California Stormwater Quality Association has additional information on preparing stormwater pollution prevention plans for these activities (*www.casqa.org*).

33. Screen all roof-mounted equipment from the view of public rights-of-way. **Depict all mechanical equipment on site plan and elevations.**

34. If archaeological and/or animal fossil material is encountered during project surveying, grading, excavating, or construction, work shall stop immediately. **(Include this note on the site plan.)**

35. If there are suspected human remains, the Fresno County Coroner shall be immediately contacted. If the remains or other archaeological material is possibly Native American in origin, the Native American Heritage Commission (Phone: (916) 653-4082) shall be immediately contacted, and the California Archaeological Inventory/Southern San Joaquin Valley Information Center (Phone: (805) 644-2289) shall be contacted to obtain a referral list of recognized archaeologists. An archeological assessment shall be conducted for the project, the site shall be formally recorded, and recommendations made to the City as to any further site investigation or site avoidance/preservation. **(Include this note on the site plan.)**

36. If animal fossils are uncovered, the Museum of Paleontology, U.C. Berkeley shall be contacted to obtain a referral list of recognized paleontologists. An assessment shall be conducted by a paleontologist and, if the paleontologist determines the material to be significant, it shall be preserved. **(Include this note on the site plan.)**

37. Connection to a municipal water system is required.

38. Connection to a municipal City of Fresno sewer system is required.

39. City of Fresno water and sewer connection charge obligations applicable to this project will be computed during the building construction plan check process and shall be payable at time of issuance of building permit unless other arrangements have been approved to defer such payments to a later date. For information relating to water and sewer service requirements and connection charges, contact Frank Saburit at (559) 621-8277.

40. Open street cuts are not permitted; all utility connections must be bored.

41. CROSS-CONNECTION CONTROL. A backflow prevention device may be required on the water service. Contact the Department of Public Utilities, Water Division (559) 621-5300 for requirements relating to approved devices, locations, testing and acceptance. This requirement must be satisfied prior to final occupancy.

42. This project was reviewed by the Fire Department only for requirements related to water supply, fire hydrants, and fire apparatus access to the building(s) on site. Review for compliance with fire and life safety requirements for the building interior and its intended use are reviewed by both the Fire Department and the Building and Safety Section of the Development and Resource Management when a submittal for building plan review is made as required by the California Building Code by the architect or engineer of record for the building.

43. Outdoor storage of materials, including ISO containers, is prohibited. All materials shall be stored within a completely enclosed building, unless approved by the Development and Resource Management Department. **(Include this note on the site plan)**

44. If video surveillance cameras are required or installed, provide signs under the surveillance cameras which notify the public that the subject property is monitored by video surveillance.

45. Owners and persons having ownership interest in businesses operating in the City of Fresno (including leasing out any commercial or industrial property, or renting out four or more dwelling units) are required by the Fresno Municipal Code to obtain a Business Tax Certificate. Contact the City of Fresno Finance Department's Business Tax Division at (559) 621-6880 for more information.

FEES

(Not all fees will be applicable to all projects)

46. NOTICE TO PROJECT APPLICANT: In accordance with the provisions of Government Code Section 66020(d)(1), the imposition of fees, dedication, reservations or exactions for this project are subject to protest by the project applicant at the time of approval or conditional approval of the development or within 90 days after the date of imposition of fees, dedications, reservation, or exactions imposed on the development project. This notice does not apply to those fees, dedications, reservations, or exactions which were previously imposed and duly noticed; or, where no notice was previously required under the provisions of Government Code Section 66020(d)(1) in effect before January 1, 1997.

47. CITYWIDE DEVELOPMENT IMPACT FEES

    a) Traffic Signal Charge (FMC Section 12-4.1101 to 12-4.1103) This project shall pay its Traffic Signal Mitigation Impact Fee at the time of building permit based on the trip generation rate(s) as set forth in the latest edition of the ITE Generation Manual. Refer to the adopted Master Fee Schedule for fee rate. This fee shall be paid at time of building permit.

b) Fire Facilities Fee (FMC Section 12-4.901 to 12-4.906) (based on building square footage, or residential units)

c) Police Facilities Fee (FMC Section 12-4.801 to 12-4.806) (based on building square footage, or residential units)

d) Parks Facilities Fee (FMC Section 12-4.701 to 12-4.706) (based on the number of residential units)

48. CITYWIDE REGIONAL AND NEW GROWTH MAJOR STREET IMPACT FEES (FMC Section 12-4.1006)

a) Street Impact Fees shall be due and payable at the time of building permit issuance unless otherwise required by State law.

b) Street Impact Fees will be a condition on all development entitlements granted.

c) New construction on vacant parcels shall be calculated on a net acreage (adjusted acre basis) of the entire property subject to the development entitlement based upon planned land use. Notwithstanding, fees shall be based upon actual land use for developments in the C-M zone district and for development projects developed inconsistent with the plan land use.

d) New construction on property that is partially developed, Street Impact Fees will be applied to the incremental increase proportionate to the respective floor to area ratios (25% for commercial and 40% for industrial). In no case shall anyone pay more than the amount of the total net acreage of the parcel multiplied by the applicable fee rate.

e) Reuse being more intensive that the original use, the developer shall be required to pay the difference between the current amount of the Street Impact Fee obligation for the old use and the current amount of the Street impact Fee obligation for the new use.

49. FRESNO COUNTY FACILITY IMPACT FEE

a) Satisfy the Fresno County Facilities Impact Fee obligation. The requirement to pay this fee is currently suspended by Fresno County. However, payment of this fee will be required if the fee has been reinstated at the time of issuance of building permits for this project.

50. REGIONAL TRANSPORTATION MITIGATION FEE (RTMF)

a) Pay the RTMF fee to the Joint Powers Agency located at 2035 Tulare Street, Suite 201, Fresno, CA 93721; (559) 233-4148, ext. 200; www.fresnocog.org. Provide proof of payment or exemption prior to issuance of building permits.

51. SCHOOL FEES

a) School fees must be paid, if required, prior to the issuance of building permits. Contact Central Unified School District. Provide proof of payment (or no fee required) prior to the issuance of building permits.

52. FLOOD CONTROL FEES

a) Flood Control fees are due, if required, prior to issuance of building permits.

53. SEWER CONNECTION CHARGES (FMC Section 6-304(a)). The following sewer connection charges may be required and will be payable at the fee rate listed in the Master Fee Schedule at the time payment is due. New sewer connection charges adopted by the Council prior to the issuance of building permits may also be applied.

a) Lateral Sewer Charge (based on property frontage to a depth of 100')

b) Oversize Sewer Charge (based on property frontage to a depth of 100')

Effective January 9, 1999, Ordinance No. 98-97 also amended certain sewer connection charges. Fresno Municipal Code Article 15, Section 12 provides property owners the incentives and deletes certain sewer connection charges pursuant to the Simple Tiered Equity Program (STEP) and the Employment Development Program (EDP). For additional information on the STEP and EDP, contact the Department of Public Utilities, Administration Division at (559) 621-8600.

54. WATER CONNECTION CHARGES: (FMC Sections 6-507 to 6-513). The following water connection charges may be required and will be payable at the fee rate listed in the Master Fee Schedule at the time payment is due. New water connection charges adopted by the Council **prior** to issuance of building permits may also be applied.

a) Frontage Charge (based on property frontage)

b) Transmission Grid Main Charge (based on acreage)

c) Transmission Grid Main Bond Debt Services Charge (based on acreage)

d) UGM Water Supply Fee (based on living units, living unit equivalents or acreage)

e) Wellhead Treatment Fee (based on living units or living unit equivalents)

f) Recharge Fee (based on living units or living unit equivalents)

g) 1994 Bond Debt Service Charge (based on living units or living unit equivalents)

h) Service Charges (based on service size required by applicant)

i) Meter Charges (based on service need)

55. Deferment of the payment of Citywide development impact fees for Fire, Police, Parks, Streets, and Traffic Signals is available for projects located within the Downtown Priority Areas in accordance with the provisions of Resolution Nos. 2009-265 and 2010-19.

CITY-WIDE DESIGN GUIDELINES ADOPTED FOR THE 2025 FRESNO GENERAL PLAN:

I. SITE DESIGN

PURPOSE OF SITE DESIGN:

Promote the improvement of the visual and built environment

GENERAL CONSIDERATIONS

1. Site Design combines the three elements of development: 1) buildings; 2) parking and circulation; and 3) landscape and amenities. These aspects must be in proper balance.

2. Buildings shall be designed and sited so as to provide a strong functional relationship to the site and the neighborhood. Required side and rear yards should be utilized and should be integrated into the overall purposeful arrangement. Inaccessible yards and similar outdoor spaces which tend to encourage storage, gathering of trash, and weeds shall be avoided, unless approved by the Director.

3. Natural site amenities shall be recognized. Views, trees, creeks and similar features unique to the site should be preserved and incorporated into development proposals. Such features shall be considered as strong site design determinants. Disruption of existing natural features, particularly older trees, shall be minimized.

4. Building setbacks must relate to the character of the existing streetscape. Where existing streets have been widened, thereby changing setbacks, field analysis of setback needs should be required for new buildings.

5. Site designs shall not negatively impact the immediate environment of the site.

6. Separate vehicular and pedestrian circulation systems shall be provided for larger projects. Pedestrian access to residential developments generally shall not utilize driveways and pick-up areas. Pedestrian linkages between uses in commercial developments shall be emphasized, including distinct pedestrian access from parking areas in large commercial developments such as shopping centers.

7. Provision must be made for bicycles. Bicycle parking in residential developments should be on an all-weather surface and be located close to dwelling unit or residential development entrances. Bicycle parking shall be lockable.

8. On larger commercial sites such as shopping centers, a portion of the total building area shall be located at the street perimeter. Such siting, together with substantial landscape treatment, reinforces and strengthens the streetscape, and helps to screen off-street parking areas.

9. Common driveways, which provide vehicular access to more than one site, are encouraged.

10. Site development shall give consideration to solar access and/or energy efficiency.

11. The siting and orientation of buildings shall respond to the pedestrian and vehicular nature of the street. Buildings on streets of high pedestrian use (such as downtown) should face on, and be directly accessible from, the sidewalk., with minimal interruption by driveways or parking areas. Buildings on streets with heavy vehicular traffic, particularly those with no on-street parking, should provide a major entry for the off-street parking area.

12. Off-street parking facilities need to be located to the rear of sites. Street frontages should be devoted to building architecture and landscaping. Parking should be screened from the street with mounds, vegetative screening, low wall, fencing, or lowered parking grade. (Refer to III. LANDSCAPING, No. 15).

13. Screening and buffering, as well as good design, needs to be used to mitigate the effects of trash areas, storage areas, service yards, loading docks and ramps, electrical and other utility boxes, mechanical equipment, and other necessary but unsightly aspects.

II. BUILDING DESIGN

PURPOSE OF BUILDING DESIGN

Development shall improve the visual and built environment of the neighborhood and the City as a whole.

GENERAL CONSIDERATIONS

1. No single theme is required in Fresno. Themes may be established for selected parts of the community. They are directed more toward standards of quality and compatibility than toward achieving a uniform appearance.

2. Architectural consistency should exist between all building elevations of a particular structure or complex of structures, including consistent use of materials. Façade treatments shall consistently encompass all building sides. "False" or "decorative" façade treatments shall be avoided. All elevations need not look alike; however, an overall architectural sense must occur.

3. Visible rooftops should be treated as building elevations. Such rooftops should be free of mechanical equipment "clutter" in situations where it may be visible from surrounding buildings or structures. Rooftop mechanical equipment is not prohibited, but its design and screening should be incorporated into building design. For example, HVAC non-transitional ducts shall be below the roof structure.

4. Mechanical equipment, including wall air conditioners, should be screened from public view. The design of mechanical equipment screening should be compatible with, and an integral element of, the building structure. Rooftop screening and other mechanical equipment screening should be a minimum of 12 inches higher than the equipment itself.

5. Add-on components such as utility meters, ladders, vent pipes and similar features need to be identified in site plans and not placed as an afterthought in full public view unless screened in an acceptable manner.

6. All proposed buildings or structures should be compatible with the neighborhood character. Building design, however, need not be unduly constrained or limited by structures on adjacent sites.

7. All buildings on the same site should have strong spatial and architectural relationships. When the first portion of a site area is to be developed, a concept plan shall be submitted for the entire site.

8. All building design should achieve a sense of human scale. Wall insets, balconies, window projections, etc. are examples of building elements which may help reduce the scale of larger buildings.

9. Materials should be relatively permanent, requiring minimum maintenance in order to avoid deterioration.

10. Building entries should be protected from the elements and should afford a "sense of entry" for the structure.

11. All designs should be responsive to energy consideration. When energy-conserving devices such as solar heat collector panels are utilized, such devices should be designed as visually integral parts of the structure.

12. Modified standards may be considered for temporary buildings are structures, which are guaranteed to be removed from the site within six (6) months.

13. Each phase of a phased development should be visually complete. Temporary barriers/ walls should be painted and trimmed to compliment the permanent construction.

14. Where buildings are on the border between different uses, there needs to be an appropriate transistion.

15. Standardized and corporate design elements must be modified to be consistent and integrated with the surrounding environment.

16. The design of fencing, trash enclosures, and similar accessory site elements should be compatible with the architecture of main buildings and should use a similar palette of materials.

17. Masonry walls and allowable chain link fences shall be designed to accept vegetation, to reduce monotony, and to prevent irregular or unsightly lines.

III. LANDSCAPING

PURPOSE OF LANDSCAPE:

Landscaping shall be used to improve aesthetics, to soften the harshness of the urban setting, and to create a pleasant human environment.

GENERAL CONSIDERATIONS:

1. All site development shall include landscaping, except where determined to be impossible by the Director.

2. Landscaping shall be designed to provide a strong relationship between the site, street frontage, and neighborhood.

3. There should be a consistency of landscape design through a development. All areas within a development need not be identical. Among other things, different landscape themes may be utilized in larger developments to delineate spaces, strengthen a sense of place, and to add movement. Such themes should be consistent within a site.

4. Landscape plans shall indicate all proposed site elements, such as outdoor lighting, signage, fencing, site furnishings, and other site elements.

5. Where possible, existing landscape elements should be incorporated and preserved. Healthy mature trees and tree groupings shall be preserved as design determinants. In sites with mature trees, the development plan, elevations, and landscape shall be required to protect existing trees. Mature trees on project sites shall be protected and preserved as per City of Fresno tree preservation standards.

6. Landscaping shall be incorporated into building and site design. Trellises, arbors, and multilevel type landscaping should be considered.

7. All projects, including exterior modifications, are subject to street tree requirements. Street trees shall meet City requirements.

8. Live plant material shall be used in all landscaped areas. Imitation vegetation is not acceptable.

9. Gravel, colored rock, bark, and similar materials may be used in conjunction with, but not instead of, living ground cover and vegetation. Brick, cobblestone, and wood can be integrated into pathways and edges where appropriate.

10. Public and employee parking areas shall be landscaped. Such landscaping shall include perimeter screening and interior shading as per City standards.

11. Automatic irrigation is required for all landscape areas; surface piping and tubing are not allowed.

12. Irrigation heads shall not overspray walks, buildings, fences, streets, etc.

13. All property owners shall maintain landscaping consistent with these guidelines.

14. Required setbacks for buildings and landscaping may be averaged, but not less than one-half of the required setback. Proposals for less than one-half of the required setbacks may be considered through a reduced-fee Variance application process.

15. Major street landscaping shall include all of the following:

    - Double-row, large-scale 20'-on-center tree canopies within public and private landscape areas (curb to end of landscape setback)

    - Screening of parking through eye-level (as seen from an automobile) design elements, including but not limited to landscaping, fences, artwork, water features, etc.

    - One hundred percent screening/blocking is not mandatory.

    - Green shall be emphasized: plant material, size, type, and location.

    - Project entry/gateways defining sense of place shall be emphasized.

IV. SIGNAGE

PURPOSE OF SIGNAGE:

Signs are intended to identify the location of a place or business or residential development.

GENERAL CONSIDERATIONS

1. Sign information is to be limited to the identification of the buisiness name and, when necessary, the business function and business logo. Product advertising shall not be permitted.

2. Signs should be simple and easy to read.

3. Signs are to be limited to the minimum necessary for the proper use of the site.

4. Signing and related graphics must relate to the overall building and site design. Signing considerations should be made during the building design stages so that signage and graphics are architecturally incorporated into those buildings.

5. Unusual architectural features (such as the "golden arches") used as a logo shall be considered and reviewed as part of the sign proposal.

6. Use of individual letters for all signing is preferred and encouraged over cabinet signs. Where cabinet signs are utilized, such cabinets must be an integral design element of the building or structure.

7. Master sign programs shall be prepared for multiple-occupancy buildings.

8. Complete sign programs for entire buildings or building complexes should be included with the architectural review of a signing request for any portion of a multiple-occupancy building. This also applies to existing buildings without any sign program. A long-term sign program must be established.

9. The light source of externally illuminated signs should not be visible.

10. Murals shall be subject to sign review.

City of
FRESNO

Planning & Development Department
2600 Fresno Street, Third Floor
Fresno, CA 93721-3604
Ph: (559) 621-8277

PERFORMANCE STANDARDS FOR PARKING LOT SHADING

Updated February 13, 2006

POLICY

Fifty percent of paved parking lots surface shall be shaded by tree canopies within fifteen years of planting (adopted by City Council policy resolution on July 12, 1988).

GENERAL

1. A "paved parking lot" shall include parking stalls, driveways, and maneuvering areas.

2. Trees planted to satisfy the requirements of these guidelines are landscaping as defined by Municipal Code and are subject to established landscaping requirements.

SITE PLAN REQUIRED

3. A landscape plan which details the degree of compliance with the Parking Lot Shade Tree Ordinance is required. The plan shall show:

    a. All landscaped areas.
    b. Tree canopies drawn to scale representing the estimated canopy at a fifteen year growth period.
    c. The total area in square feet of the paved parking lot, driveways, and maneuver areas; and the area shaded by tree canopies. A schedule listing total parking area, shaded area, and the percentage of parking area shaded should be included.
    d. A schedule of the specific names of proposed trees and their sizes.

4. Such plan shall be approved by the Planning and Development Department prior to issuance of building permits. However, the plan is encouraged to be submitted at the time of site plan review.

METHODOLOGY

5. To simplify the process of determining compliance, the true angle of deflection of natural sunlight shall not be considered. Shaded areas shall be assumed to be only those portions of a paved parking lot directly beneath the shading canopy or drip line.

6. Shading shall be provided by tree canopies except that any portion of a paved parking lot directly beneath and shaded by a man made structure (overhangs and covered parking, for instance) shall be deleted from the requirements of these performance standards and shall be subtracted from the area of the parking lot to be shaded.

7. Credit shall be given only for surface area shaded. Multiple canopies shading the same surface area will not be counted as multiple credit.

8. Landscape planters beneath the canopy may be considered as shaded parking areas for the purpose of determining compliance.

9. Where more than five trees are to be planted, mix tree species.

10. Trees planted along the perimeter of a lot may be counted as providing shade for the full area of their canopy.

11. If the degree of overlap between trees is less than 15 percent, all trees may be counted as shading 100 percent of their canopy. If the degree of overlap is 15 percent or greater, then it will be necessary to perform individual calculation to determine the area of shading.

12. A ten percent minor deviation of the shading standard may be approved by the Director in accordance with established procedures in the Municipal Code if it is found that the normal standards would impose an undue hardship.

ALLOWABLE SPECIES/CANOPY (Provided by Parks Department)

MINIMUM TREE REQUIREMENT

Provide one medium size tree for every two required parking spaces. (This requirement may be modified by the Director if the standards for shading and perimeter planting have been met.)

Disperse trees over the parking lot area to provide 50 percent shading of the parking area surface within 15 years (This requirement may be reduced to 40 percent for existing development if it is demonstrated that the constraints of an existing site would make it impossible to meet the normal standard). Trees shall also be planted in the required landscaped areas along the periphery of the development in order to shade and enhance adjacent property and public rights-of-ways.

Trees shall be maintained in good health. However, trees may not be trimmed or pruned to reduce the natural height or overall crown of the tree, except as necessary for health of the tree and public safety; or as may otherwise be approved by the Planning and Development Department.

MINIMUM PLANTER SIZE (between tiers of parking)

Continuous Planter

	New Development	Existing Development
Standard Parking Stall	8 feet	6 feet
Compact Parking Stall	6 feet	4 feet

Along Periphery 10 feet except as may be approved pursuant to Municipal Code.

MINIMUM SIGHT TRIANGLE

10 feet in traffic areas

30 – 35 feet at street intersections

100 feet at major street intersections

Trees within the triangle shall be trimmed up to eight-feet minimum above the surface of the parking lot.

Other landscaping (ground cover and shrubs) shall not exceed two and one-half feet above the parking lot surface.

CITY OF FRESNO PARKS AND RECREATION DEPARTMENT

30 feet to 35 feet diameter trees 100% = 962 square ft; 50% = 481 square ft; 25% = 240 square ft

Botanical Name	Planter Size (Sq. Ft.)	Height (Feet)	Growth Rate	Roots	Soil	Remarks
Alnus rhombifolia WHITE ALDER	6	50	Rapid	Shallow	Moist	Deciduous
Celtis sinensis CHINESE HACKBERRY	6	50	Moderate	Medium to Deep	Most Soils	Deciduous
Cinnamomum camphora CAMPHOR TREE	8	50	Slow	Shallow	Most Soils	Evergreen, attractive, shiny, yellow-green foliage
Fraxinus o. 'Raywoodi' RAYWOOD ASH	6	40	Fast	Medium	Most Soils	Deciduous, dark green foliage
Ginkgo biloba MAIDENHAIR TREE	6	50	Slow	Deep	Most Soils	Deciduous, very open tree
Liriodendron tulpifera TULIP TREE	8	60	Moderate	Medium	Deep Moist	Deciduous, susceptible to aphids, causes dripping
Magnolia grandiflora SOUTHERN MAGNOLIA	8	50	Slow	Medium	Most Soils	Evergreen, constant litter problem
Pistacia chinesis CHINESE PISTACHE	6	40	Moderate	Deep	Most Soils	Deciduous, provides filtered shade, excellent fall color
Platanus acerifolia LONDON PLANE TREE	8	50	Fast	Medium to Deep	Most Soils	Deciduous, anthracnose, red spider, plant bloodgood variety
Quercus agrifolia COAST LIVE OAK	8	50	Moderate	Deep	Most Soils	Evergreen, biannual acorn drop
Quercus ilex HOLLY OAK	6	50	Moderate	Deep	Deep	Evergreen, biannual heavy acorn drop
Quercus lobata VALLEY OAK	8	50	Moderate	Deep	Deep	Deciduous
Quercus suber CORK OAK	8	60	Moderate	Deep	Moist Drained	Evergreen
Quercus virginiana SOUTHERN LIVE OAK	8	60	Moderate	Deep	Most Soils	Evergreen, attractive, bright green foliage
Ulmus sempervirens CHINESE EVERGREEN ELM	6	50	Rapid	Medium	Most Soils	Semi-evergreen, should be annually trimmed
Zelkova serrata SAWLEAF ZELKOVA	8		Fast	Medium	Most Soils	Deciduous, attractive vase shape

20 feet to 30 feet diameter trees 100% = 707 square ft; 50% = 354 square ft; 25% = 177 square ft

Botanical Name	Planter Size (Sq. Ft.)	Height (Feet)	Growth Rate	Roots	Soil	Remarks
Ceratonia siliqua CAROB TREE	8	40	Moderate	Shallow	Most Soils	Evergreen, use male trees only
Koelreuteria Paniculata GOLDENRAIN TREE	6	35	Moderate	Deep	Most Soils	Deciduous, drought resistant, yellow flowers
Liquidambar styraciflua AMERICAN SWEET GUM	8	60	Moderate	Shallow	Most Soils	Deciduous, seed pods a litter problem, fall color
Pinus canariensis CANARY ISLAND PINE	6	60	Fast	Deep	Most Soils	Evergreen, conifer, bluegreen needles, shed constantly
Pinus eldarica MONDELL PINE	6	60	Fast	Deep	Most Soils	Evergreen, conifer, good color
Pyrus c. 'Bradford' BRADFORD PEAR	6	30	Fast	Deep	Most Soils	Evergreen, white flowers, good fall color
Quercus palustris PIN OAK	6	50	Fast	Shallow	Best in Clay Soil	Deciduous, brown leaves hang on during winter
Prunus c. pissardi PURPLE-LEAF PLUM	6	20	Fast	Medium	Most Soils	Deciduous, purple leaves, messy fruit
Sapium sebiferum CHINESE TALLOW TREE	6	35	Fast	Medium	Most Soils	Deciduous, surface roots, good fall color
Sequoia sempervirens COAST REDWOOD	8	70	Fast	Deep	Most Soils	Evergreen, conifer

15 feet to 20 feet diameter trees 100% = 314 square ft; 50% = 157 square ft; 25% = 79 square ft

Botanical Name	Planter Size (Sq. Ft.)	Height (Feet)	Growth Rate	Roots	Soil	Remarks
Acer palmatum JAPANESE MAPLE	4	20	Slow	Shallow	Moist Drained	Deciduous, best in afternoon shade
Cercis canadensis EASTERN REDBUD	4	20	Moderate	Medium	Most Soils	Deciduous, drought resistant, spring flowers
Malus purpurea 'Eleyi' ELEY CRABAPPLE	4	20	Moderate	Medium	Most Soils	Deciduous, wine red flowers in spring
Podocarpus gracilior FERN PINE	6	40	Moderate	Deep	Most Soils	Evergreen, clean and pest free
Pyrus Kawakami EVERGREEN PEAR	4	25	Moderate	Medium	Most Soils	Deciduous, subject to fireblight
Rhus lancea AFRICAN SUMAC	4	25	Medium	Oedius	Most Soils	Evergreen, shiny green foliage, drought, suckers

K:\WORD FORMS\Front Counter Handouts\Parking Lot Shading Standards Complete.doc

City of FRESNO

Fresno All-America City 2000

PARKING MANUAL

Part I

ADOPTED APRIL 1, 1987

CITY OF FRESNO
DEPARTMENT OF PUBLIC WORKS
2600 FRESNO STREET
FRESNO, CA. 93721-3623

TABLE OF CONTENTS

PURPOSE

1. PARKING SPACE DIMENSIONS

   A. Passenger Vehicle Parking Space 1
   B. Truck Loading Spaces 2

2. DESIGN CRITERIA

   A. Driveway Approach Construction Standards 2
   B. Backing onto Public Rights-of-Way 2
   C. Access to Parking Spaces 3
   D. Traffic Circulation Signing and Markings 3
   E. Surface Requirements 4
   F. Delineation of Parking Spaces 4
   G. Physical Barriers 4
   H. Landscaping 5
   I. Lighting 5
   J. Maintenance of Parking Facilities and Equipment 6
   K. Parking Lot Design 6

3. CRITERIA TO DETERMINE BASIC STALL SIZE 6

4. ACCESSIBLE PARKING STALLS 8

5. TABLES OF DESIGN DIMENSIONS FOR VARIOUS PARKING ANGLES 9-16

6. DESIGN DIMENSIONS (STANDARD STALLS) 17

7. FULL-TURN DETAIL FOR 65 DEGREES OR LESS PARKING ANGLE (STANDARD STALLS) 18

8. FULL-TURN DETAIL FOR MORE THAN 65 DEGREES PARKING (STANDARD STALLS) 19

PURPOSE

The purpose of this manual is to present the design standards to regulate the development of off-street parking facilities in the City of Fresno.

The design standards contained herein represent minimum requirements necessary for providing adequately developed parking facilities. For the greater part, these have been taken from the Zoning Ordinance and the Standard Specifications of the Public Works Department. In addition, standards have been developed for those special situations which have not been covered by the above two sources.

These standards deal with the method of parking vehicles in an off-street facility. In designing the parking for a given zoning or use, the Zoning Ordinance should be consulted to determine the number of parking spaces required. In addition, the developer is urged to conduct an independent parking study to determine whether these minimum standards are adequate to meet the parking demands of his specific development.

Subsection 5 of Section 12-306-I of the Fresno Municipal Code provides that the standards required in this manual shall be followed.

PARKING DESIGN STANDARDS

1. PARKING SPACE DIMENSIONS

A. Passenger Vehicle Parking Space

There are two basic passenger vehicle parking space dimensions. 9' x 19' standard painted stalls and 8-1/2' x 16-1/2' small car (compact) painted stalls. Any parking lot or structure may install these basic stalls in accordance with criteria defined on page 6, Section 3. Should a property owner wish to reduce the two basic stall sizes by designating exclusive employee parking areas or by constructing continuous concrete curbs, the two basic stall sizes may be reduced in size. The eight cases defined below reflect dimensions for standard and small car stalls, stalls with continuous concrete curbs, and stalls designated for exclusive employee parking areas.

Case#	Length	Width	Requirements
1	19'	9'	Standard painted stall.
2	18'	9'	Standard plus continuous concrete curbs.
3	19'	8-1/2'	Standard plus designated exclusive employee parking.
4	18'	8-1/2'	Standard plus continuous concrete curbs and designated exclusive employee parking.
5	16-1/2'	8-1/2'	Compact painted stall.
6	15-1/2'	8-1/2'	Compact plus continuous concrete curbs.
7	16-1/2'	8'	Compact plus designated exclusive employee parking.
8	15-1/2'	8'	Compact plus continuous concrete curbs and designated exclusive employee parking.

The conditions that must be met in order to define which basic stall size may be used are stated in Section 3 of this manual, page 6.

B. Truck Loading Spaces

A truck loading space shall be an accessible rectangle having a width of 12 feet and a length of 40 feet. Any overhead obstruction shall have a vertical clearance of 15 feet.

2. DESIGN CRITERIA

A. Driveway Approach Construction Standards

Driveway approaches to private property shall be constructed in conformance with the Standard Specifications of the Public Works Department, particularly Drawings **P-1, P-2, P-3**, and **P-4**, as each may apply. Special driveway approach designs not shown in the Standard Specifications may be approved by the Public Works Department for developments for which more than 200 parking spaces are provided.

Driveway approaches on public streets may not be used to furnish circulation from one row of parking to an adjacent row of parking. This traffic circulation must be provided on private property.

B. Backing onto Public Rights-of-Way

Backing a vehicle onto or from public rights-of-way (public alleys exempt) is prohibited in all areas except residential areas located on streets that are classified as a local street. Parking spaces shall be designed and arranged so that it is more convenient for the parking space user to accomplish the necessary backing movements on the private property than it is to back onto or from the public right of way, where backing is prohibited.

C. Access to Parking Spaces

All parking spaces must have convenient ingress and egress. Access lanes shall be clear and specifically delineated as necessary. (Except in lots with less than 10 parking stalls). All access to individual parking spaces shall be from access lanes (aisles) within the parking facility or from a public alley. Aisle widths are stated on pages 9 through 16 of this manual. Final approval of aisle widths that are designated as fire lanes shall be by the Fresno Fire Department.

Note: An aisle way which provides direct access to parking stalls shall be a one-way aisle, except for parking stalls which are perpendicular or parallel to the aisle way, and where opposing directions are each provided in separate bays (two W-1 bays, see pages 9 through 16) or an opposing aisle is at least 13 feet wide in addition to W-1.

The parking space shall be designed so that the total process of entering and leaving a parking space shall be accomplished in no more movements than two forward and one reverse. No backing maneuver from a parking stall shall conflict or block the public street driveway approach. All such stalls shall be no closer than 20' to the property line at the driveway approach. With the exception of parking facilities having attendant parking, designing of a parking space so as to require the movement of a vehicle to permit entry or exit from another parking space is not permitted.

All required parking spaces shall be available and accessible at all times for vehicular parking purposes.

D. Traffic Circulation Signing and Markings

Directional signs, arrows, and appropriate pavement marking shall be installed to control the direction of traffic flow, when deemed necessary by Public Works Department or the Director of the Development Department.

E. Surface Requirements

All parking areas shall be surfaced in accordance with the Standard Specifications of the Department of Public Works. Reference Public Works Standard **P-41.**

F. Delineation of Parking Spaces

All parking spaces shall be delineated by appropriate fixed curbing, painted lines (a minimum of 4" wide), or other fixed markers. Compact parking stalls or groups of parking stalls shall be individually signed or marked. Any curb painting used to indicate specific use or time limits of parking spaces shall conform to Chapter 10 of the Municipal Code of the City of Fresno.

G. Physical Barriers

Fixed physical barriers shall be installed to protect public and private property adjacent to the parking facility as well as buildings, landscaping, and appurtenances within the development which could be damaged by vehicles using the parking facility. These barriers shall be designed and constructed to facilitate easy cleaning of the parking surface.

A solid masonry wall shall be constructed when required by the zoning ordinance. When no masonry wall is required, wheel stops in the form of a 6" high concrete curb or other approved fixed barrier, placed a minimum distance of 3' from the property line, or the building to be protected, shall be installed. Landscaping shall be adequately protected to avoid damage by vehicles.

Generally, the fixed physical barrier will be placed 3 feet from the property line, or the building to be protected; however, this distance must be a minimum of 5 feet if the vehicles are permitted to back into the parking stalls.

H. Landscaping

Landscaping and irrigation systems shall be installed where required by the Zoning Ordinance or other condition to zoning. For those parking facilities where landscaping is not required, the developer is encouraged to install landscaping to improve the appearance of his premises and of the general neighborhood.

I. Lighting

A lighting system shall be installed on all off-street parking areas. This lighting system shall be designed to produce a minimum maintained average light level of one-half (1/2) foot candle on the entire parking facility's horizontal surface, including the parking spaces, the loading spaces and the vehicular and pedestrian circulation areas.

The system shall have a maximum brightness ratio of 6 to 1.

The lighting fixtures shall be hooded and so arranged and controlled as not to cause a nuisance either to highway traffic or adjacent properties. When the parking facility is open to the public during darkness, this lighting system shall be operating sufficiently to produce the required minimum of one-half (1/2) foot-candle.

All lighting designs are subject to review and approval by the City.

J. Maintenance of Parking Facilities and Equipment

All paving, directional devices and protective equipment, landscaping, and other equipment furnished or required on the parking facility shall be maintained to insure safe pedestrian movement, vehicular operation, adequate protection of adjoining properties, and to present a neat and attractive appearance of the facility.

K. Parking Lot Design

The design of parking lots shall conform to the minimum standards shown on pages 9 through 16.

3. CRITERIA TO DETERMINE BASIC STALL SIZE

A. Any parking lot or structure may use **Case #1** stall dimensions for design.

B. In order to use **Case #2** dimensions a 6" high continuous concrete curb must be used. Concrete wheel stops are not an acceptable substitute. The allowable front vehicle overhang is 3'.

C. To use **Case #3** dimensions 90% of the parking area must be designated for the exclusive use of employees. The 10% of the parking area closest to the main building entrance must be reserved for customer/visitor parking. This 10% must be designed to **Case #1 or #2** standards.

D. **Case #4** dimensions may be used as stated in **Case #3** if a 6" high continuous concrete curb is constructed. Concrete wheel stops are not an acceptable substitute. The allowable front vehicle overhang is 3'.

E. **Case #5** reflects the basic size for small car spaces in lots or structures. 8-1/2' x 16-1/2' is the basic dimension. Up to twenty-five percent (25%) of the parking spaces in any given parking lot in the commercial, industrial, manufacturing, school, or hospital zone districts may be designated for small cars. Other long term parking areas may also be considered by the director. Residential uses may not use small car standards **Cases #5 through #8**. Before any small car standards **(Cases #5 through #8)** are allowed 10 standard size stalls **(Cases #1 through #4)** must be provided. These 10 standard size stalls must be located on the site closest to the main building entrance. 50% of the standard size stalls excluding the required 10 minimum and the required handicap stalls must be located on the site closest to the main entrance (up to 25 spaces). On lots exceeding 70 stalls, 25 standard size and handicap stalls shall be located on the site closest to the main entrance.

F. **Case #6** dimensions may be used with the same criteria stated in Case #5 with the addition of a 6" high continuous concrete curb. Concrete wheel stops are not an acceptable substitute. The allowable front vehicle overhang is 2'.

G. **Case #7** dimensions may be used if 90% of the parking area is designed for the exclusive use of employees. The 10% of parking area closest to the main building entrance must be reserved for customer/visitor parking. This 10% must be designed to Case #1 or #2 standards.

H. **Case #8** dimensions may be used as stated in **Case #7** if a 6" high continuous concrete curb is constructed. Concrete wheel stops are not an acceptable substitute. The allowable front vehicle overhang is 2'.

Access to all spaces shall conform to the parameters outlined in Section 2-C of this manual. If a common space is to be provided serving both small cars and standard size cars, the minimum dimensions for standard cars shall apply.

4. ACCESSIBLE PARKING STALLS

Accessible Parking Stalls shall be provided as required in the zoning ordinance. Accessible parking for people with disabilities should be consistent with current State and Federal Guidelines.

For more information about California State requirements for accessible parking, you can visit the California Division of State Architect (DSA) website at:

http://www.dsa.dgs.ca.gov/Access/default.htm

You can view the DSA's California Access Compliance Reference Manual (revised June of 2006) at::

http://www.dsa.dgs.ca.gov/Access/ud_accessmanual.htm

checklist for accessible parking at:

http://www.documents.dgs.ca.gov/dsa/pubs/checklists_06-16-06.pdf

The ADA Standards for Accessible Design are available at the US Department of Justice Website:

http://www.ada.gov/stdspdf.htm

5. TABLE OF DESIGN DIMENSION FOR VARIOUS PARKING ANGLES

(See pages 9-16)

TABLE OF DESIGN DIMENSION FOR VARIOUS PARKING ANGLES

CASE - 1

ANGLE OF PARKING	PARKING BY DIMENSIONS W-1	W-2	W-3	W -4	AISLE WIDTH	DESIGN LAYOUT DIMENSION P.L.	P.W.
30.0	29.5	46.5	42.5	39.0	12.0	29.9	18.0
35.0	30.5	48.5	45.0	41.0	12.0	26.1	15.7
40.0	31.0	50.0	47.0	43.5	12.0	22.8	14.0
45.0	32.0	51.5	48.5	45.0	12.0	19.8	12.7
50.0	33.5	53.5	51.0	48.0	13.0	17.1	11.8
55.0	33.5	54.5	52.0	49.5	13.0	14.5	11.0
60.0	35.0	56.0	53.5	51.5	14.0	12.1	10.4
65.0	37.0	58.0	56.0	54.0	16.0	9.8	9.9
70.0	39.0	60.0	58.5	57.0	18.0	7.6	9.6
75.0	40.5	61.5	60.0	59.0	20.0	5.5	9.3
80.0	43.5	63.5	63.0	62.0	23.0	3.6	9.1
85.0	44.5	64.5	64.0	63.5	25.0	1.7	9.0
90.0	47.0	65.0	65.0	65.0	27.0	0.0	9.0

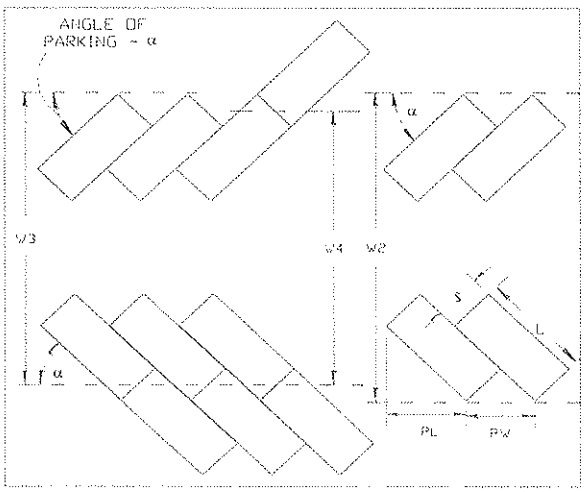

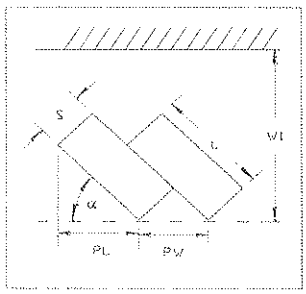

S = 9.0 ft.
L = 19.0 ft.

Note: An aisle way which provides direct access to parking stalls shall be a one-way aisle, except for parking stalls which are perpendicular or parallel to the aisle way.

TABLE OF DESIGN DIMENSIONS FOR VARIOUS PARKING ANGLES

CASE - 2

ANGLE OF PARKING	PARKING BY DIMENSIONS W-1	W-2	W-3	W-4	AISLE WIDTH	DESIGN LAYOUT DIMENSION P.L.	P.W.
30.0	29.0	45.5	41.5	38.0	12.0	29.1	18.0
35.0	29.5	47.5	43.5	40.0	12.0	25.3	15.7
40.0	30.5	49.0	45.5	42.0	12.0	22.0	14.0
45.0	31.0	50.0	47.0	44.0	12.0	19.1	12.7
50.0	32.5	52.0	49.5	46.5	13.0	16.4	11.8
55.0	33.0	53.0	50.0	47.5	13.0	13.9	11.0
60.0	34.0	54.0	52.0	49.5	14.0	11.6	10.4
65.0	36.0	56.0	54.5	52.5	16.0	9.4	9.9
70.0	38.0	58.0	56.5	55.0	18.0	7.3	9.6
75.0	39.5	59.5	58.5	57.0	20.0	5.3	9.3
80.0	42.5	61.5	61.0	60.0	23.0	3.4	9.1
85.0	43.5	62.5	62.0	61.5	25.0	1.6	9.0
90.0	46.0	63.0	63.0	63.0	27.0	0.0	9.0

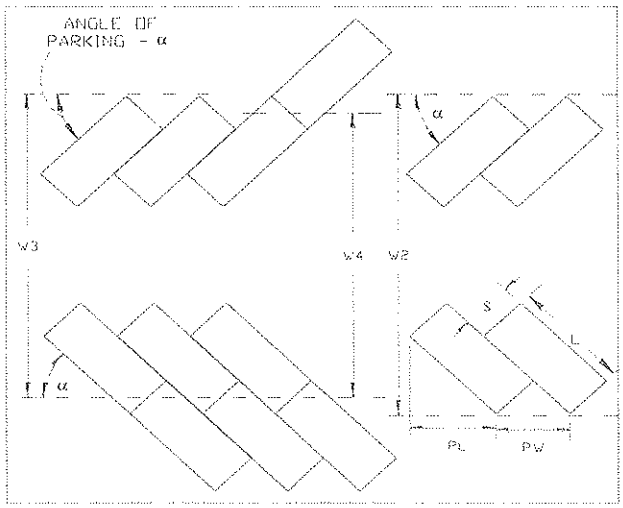

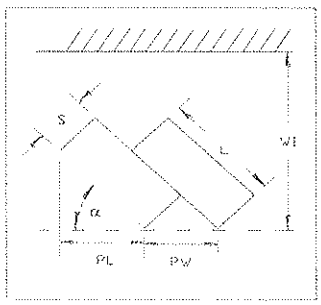

S = 9.0 ft.
L = 18.0 ft.

Note: An aisle way which provides direct access to parking stalls shall be a one-way aisle, except for parking stalls which are perpendicular or parallel to the aisle way.

TABLE OF DESIGN DIMENSIONS FOR VARIOUS PARKING ANGLES

CASE -3

ANGLE OF PARKING	PARKING BY DIMENSIONS W-1	W-2	W-3	W-4	AISLE WIDTH	DESIGN LAYOUT DIMENSION P.L	PW
30.0	29.0	45.5	42.0	38.5	12.0	29.2	17.0
35.0	30.0	47.5	44.0	41.0	12.0	25.5	14.8
40.0	30.5	49.5	46.0	43.0	12.0	22.3	13.2
45.0	31.5	51.0	48.0	45.0	12.0	19.5	12.0
50.0	33.0	53.0	50.5	47.5	13.0	16.8	11.1
55.0	33.5	54.0	51.5	49.0	13.0	14.3	10.4
60.0	34.5	55.5	53.5	51.0	14.0	12.0	9.8
65.0	37.0	57.5	56.0	54.0	16.0	9.7	9.4
70.0	39.0	59.5	58.0	56.5	18.0	7.6	9.1
75.0	40.5	61.0	60.0	59.0	20.0	5.5	8.8
80.0	43.0	63.5	62.5	62.0	23.0	3.6	8.6
85.0	44.5	64.5	64.0	63.5	25.0	1.7	8.5
90.0	47.0	65.0	65.0	65.0	27.0	0.0	8.5

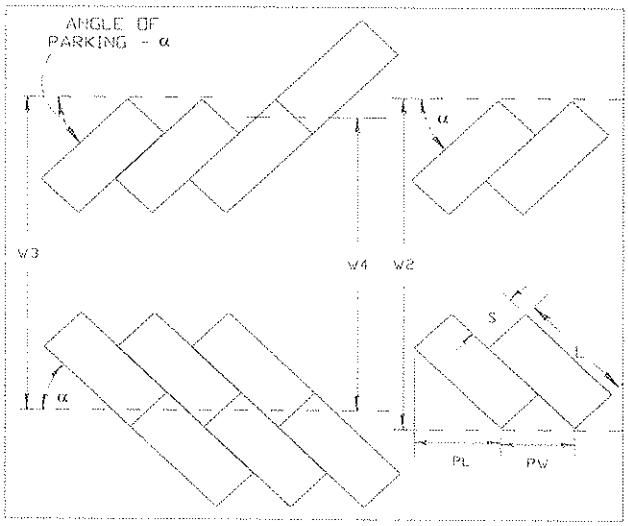

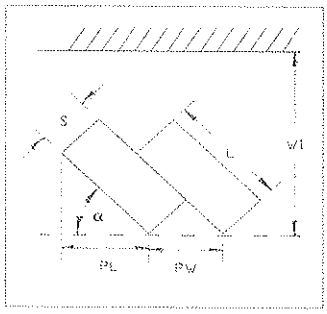

S = 8.5 ft.
L = 19.0 ft.

Note: An aisle way which provides direct access to parking stalls shall be a one-way aisle, except for parking stalls which are perpendicular or parallel to the aisle way.

TABLE OF DESIGN DIMENSIONS FOR VARIOUS PARKING ANGLES

CASE - 4

ANGLE OF PARKING	PARKING BY DIMENSIONS W-1	W-2	W-3	W-4	AISLE WIDTH	DESIGN LAYOUT DIMENSION P.L.	P.W.
30.0	28.5	44.5	41.0	37.5	12.0	28.3	17.0
35.0	29.5	46.5	43.0	39.5	12.0	24.7	14.8
40.0	30.0	48.0	45.0	41.5	12.0	21.6	13.2
45.0	30.5	49.5	46.5	43.5	12.0	18.7	12.0
50.0	32.5	51.5	49.0	46.0	13.0	16.2	11. 1
55.0	32.5	52.0	50.0	47.5	13.0	13.7	10.4
60.0	34.0	53.5	51.5	49.5	14.0	11.5	9.8
65.0	36.0	56.0	54.0	52.0	16.0	9.3	9.4
70.0	38.0	57.5	56.0	54.5	18.0	7.2	9.1
75.0	39.5	59.0	58.0	57.0	20.0	5.3	8.8
80.0	42.0	61.5	60.5	60.0	23.0	3.4	8.6
85.0	43.5	62.5	62.0	61.5	25.0	1.6	8.5
90.0	46.0	63.0	63.0	63.0	27.0	0.0	8.5

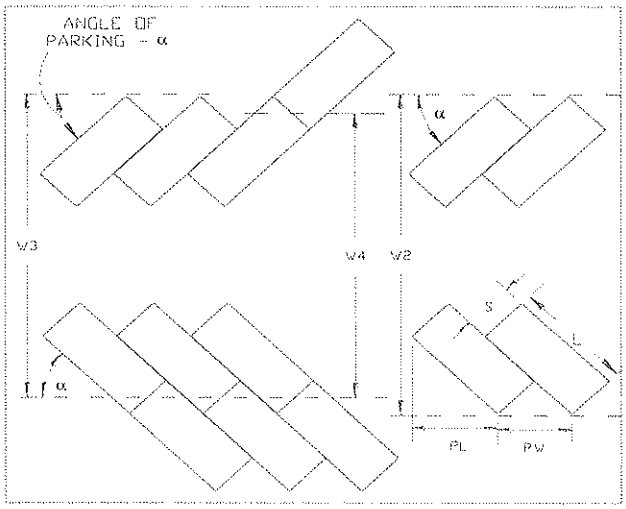

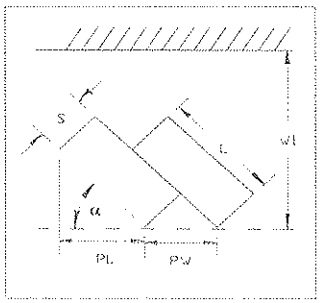

S = 8.5 ft.
L = 18.0 ft.

Note: An aisle way which provides direct access to parking stalls shall be a one-way aisle, except for parking stalls which are perpendicular or parallel to the aisle way.

TABLE OF DESIGN DIMENSIONS FOR VARIOUS PARKING ANGLES

CASE -5

ANGLE OF PARKING	PARKING BY DIMENSIONS W-1	W-2	W-3	W-4	AISLE WIDTH	DESIGN LAYOUT DIMENSION P.L.	P.W.
30.0	27.5	43.0	39.5	36.0	12.0	27.0	17.0
35.0	28.5	45.0	41.5	38.0	12.0	23.5	14.8
40.0	29.0	46.0	43.0	39.5	12.0	20.4	13.2
45.0	29.5	47.5	44.5	41.5	12.0	17.7	12.0
50.0	31.0	49.0	46.5	43.5	13.0	15.2	11.1
55.0	31.5	50.0	47.5	45.0	13.0	12.9	10.4
60.0	32.5	51.0	49.0	47.0	14.0	10.7	9.8
65.0	34.5	53.0	51.5	49.5	16.0	8.7	9.4
70.0	36.5	55.0	53.5	52.0	18.0	6.7	9.1
75.0	38.0	56.5	55.0	54.0	20.0	4.9	8.8
80.0	40.5	58.5	57.5	57.0	23.0	3.1	8.6
85.0	42.0	59.5	59.0	58.5	25.0	1.5	8.5
90.0	44.5	60.0	60.0	60.0	27.0	0.0	8.5

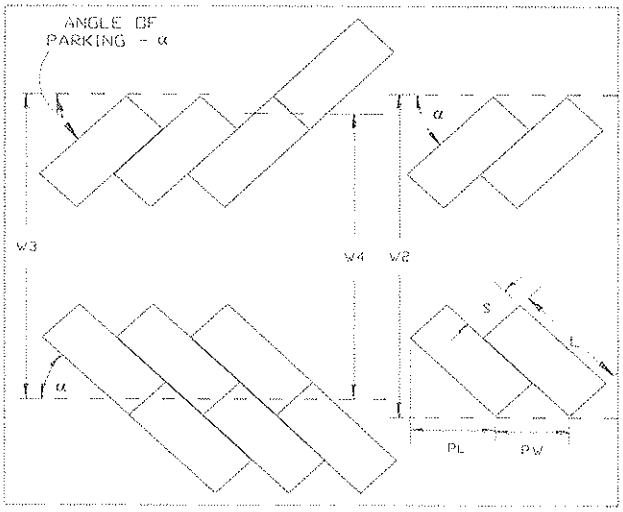

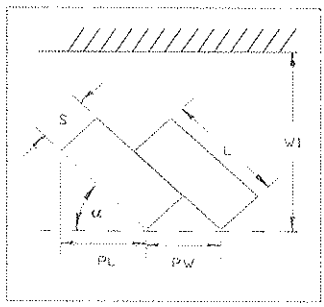

S = 8.5 ft.
L = 16.5 ft.

Note: An aisle way which provides direct access to parking stalls shall be a one-way aisle, except for parking stalls which are perpendicular or parallel to the aisle way.

TABLE OF DESIGN DIMENSIONS FOR VARIOUS PARKING ANGLES

CASE - 6

ANGLE OF PARKING	PARKING BY DIMENSIONS W-1	W-2	W-3	W-4	AISLE WIDTH	DESIGN LAYOUT DIMENSION P.L.	P.W.
30.0	27.0	42.0	38.5	35.0	12.0	26.2	17.0
35.0	28.0	43.5	40.0	36.5	12.0	22.6	14.8
40.0	28.5	45.0	41.5	38.5	12.0	19.6	13.2
45.0	29.0	46.0	43.0	40.0	12.0	17.0	12.0
50.0	30.5	47.5	45.0	42.0	13.0	14.6	11.1
55.0	30.5	48.0	45.5	43.5	13 0	12.3	10.4
60.0	31.5	49.5	47.0	45.0	14.0	10.2	9.8
65.0	33.5	51.5	49.5	47.5	16.0	8.2	9.4
70.0	35.5	53.0	51.5	50.0	18.0	6.4	9.1
75.0	37.0	54.5	53.0	52.0	20.0	4.6	8.8
80.0	39.5	56.5	55.5	55.0	23.0	3.0	8.6
85.0	41.0	57.5	57.0	56.5	25.0	1.4	8.5
90.0	43.5	58.0	58.0	58.0	27.0	0.0	8.5

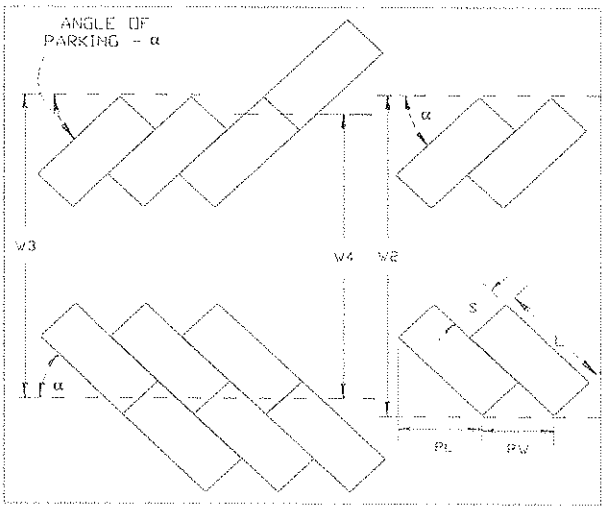

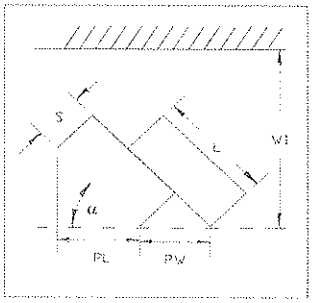

S = 8.5 ft.
L = 15.5 ft.

Note: An aisle way which provides direct access to parking stalls shall be a one-way aisle, except for parking stalls which are perpendicular or parallel to the aisle way.

TABLE OF DESIGN DIMENSIONS FOR VARIOUS PARKING ANGLES

CASE - 7

ANGLE OF PARKING	PARKING BY DIMENSIONS W-1	W-2	W-3	W-4	AISLE WIDTH	DESIGN LAYOUT DIMENSION P.L.	P.W.
30.0	27.0	42.5	39.0	35.5	12.0	26.3	16.0
35.0	28.0	44.0	41.0	37.5	12.0	22.9	14.0
40.0	28.5	45.5	42.5	39.5	12.0	19.9	12.5
45.0	29.5	46.5	44.0	41.0	12.0	17.3	11.3
50.0	31.0	48.5	46.0	43.5	13.0	14.9	10.4
55.0	31.0	49.0	47.0	44.5	13.0	12.7	9.8
60.0	32.5	50.5	48.5	46.5	14.0	10.6	9.2
65.0	34.5	52.5	51.0	49.5	16.0	8.6	8.8
70.0	36.0	54.5	53.0	51.5	18.0	6.6	8.5
75.0	38.0	56.0	55.0	54.0	20.0	4.8	8.3
80.0	40.5	58.5	57.5	57.0	23.0	3.1	8.1
85.0	42.0	59.5	59.0	58.5	25.0	1.5	8.0
90.0	44.5	60.0	60.0	60.0	27.0	0.0	8.0

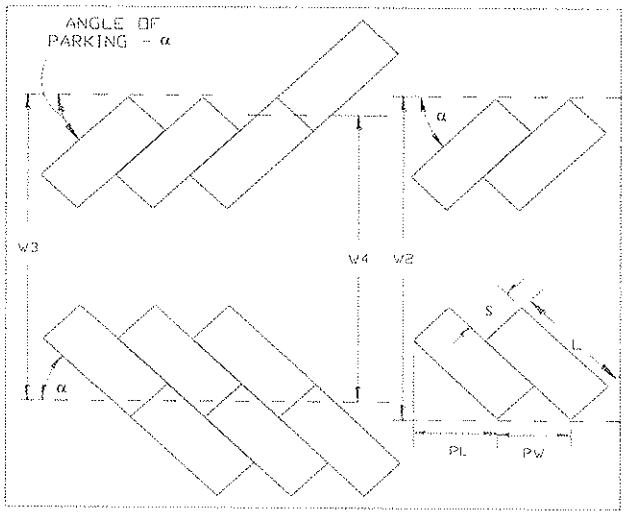

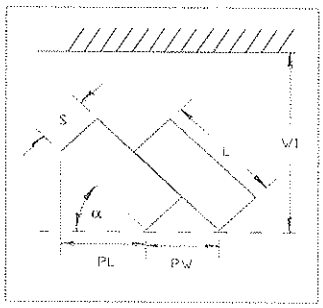

S = 8.0 ft.
L = 16.5 ft.

Note: An aisle way which provides direct access to parking stalls shall be a one-way aisle, except for parking stalls which are perpendicular or parallel to the aisle way.

TABLE OF DESIGN DIMENSIONS FOR VARIOUS PARKING ANGLES

CASE - 8

ANGLE OF PARKING	PARKING BY DIMENSION W-1	W-2	W-3	W-4	AISLE WIDTH	DESIGN LAYOUT DIMENSION P.L.	P.W.
30.0	26.5	41.5	38.0	34.5	12.0	25.4	16.0
35.0	27.5	43.0	39.5	36.5	12.0	22.1	14.0
40.0	28.0	44.0	41.0	38.0	12.0	19.2	12.5
45.0	28.5	45.0	42.5	39.5	12.0	16.6	11.3
50.0	30.0	47.0	44.5	42.0	13.0	14.3	10.4
55.0	30.5	47.5	45.5	43.0	13.0	12.1	9.8
60.0	31.5	49.0	47.0	45.0	14.0	10.1	9.2
65.0	33.5	51.0	49.0	47.5	16.0	8.1	8.8
70.0	35.5	52.5	51.0	50.0	18.0	6.3	8.5
75.0	37.0	54.0	53.0	52.0	20.0	4.6	8.3
80.0	39.5	56.5	55.5	55.0	23.0	2.9	8.1
85.0	41.0	57.5	57.0	56.5	25.0	1.4	8.0
90.0	43.5	58.0	58.0	58.0	27.0	0.0	8.0

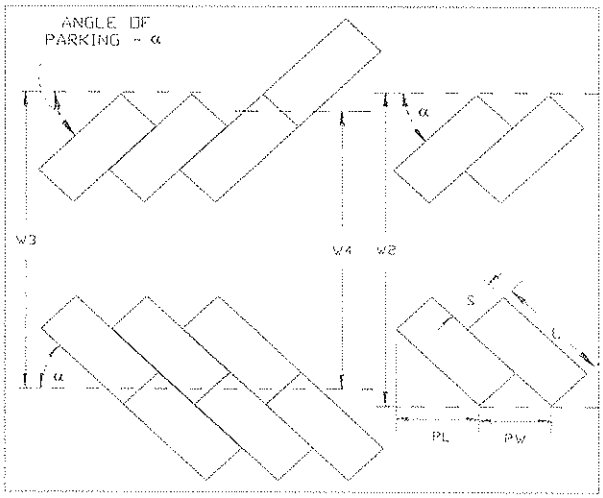

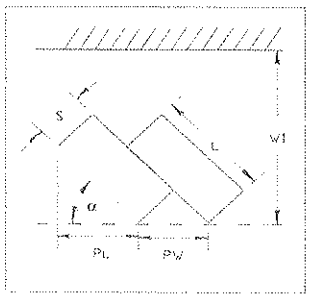

S = 8.0 ft.
L = 15.5 ft.

Note: An aisle way which provides direct access to parking stalls shall be a one-way aisle, except for parking stalls which are perpendicular or parallel to the aisle way.

6. PARALLEL PARKING DESIGN DIMENSIONS (STANDARD STALLS)

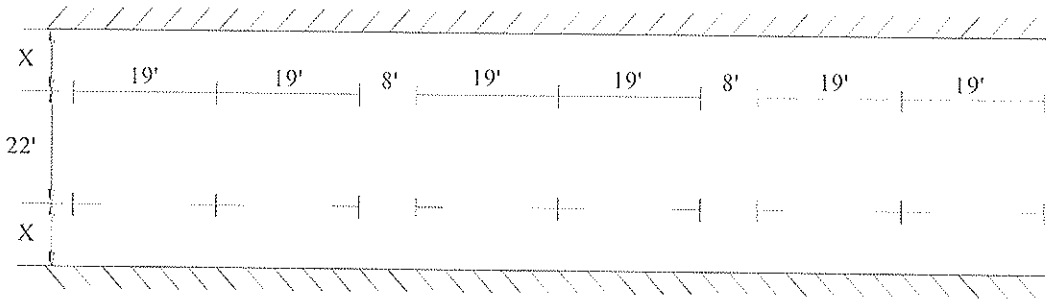

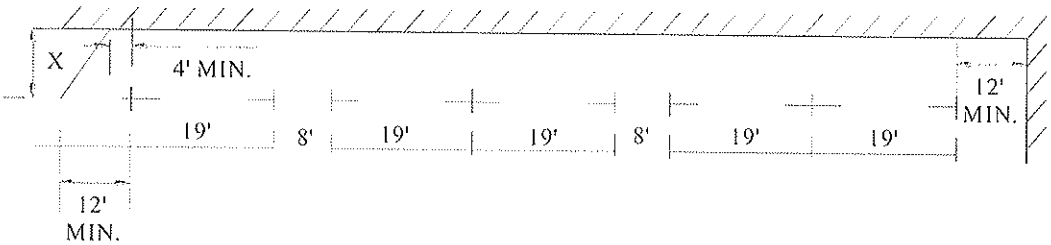

X = 10' IF ADJACENT TO AN OBSTRUCTION OVER 8" HIGH SUCH AS A WALL OR FENCE.

X = 8' IF ADJACENT TO A SIDEWALK OR SIMILAR BARRIER LESS THAN 8" HIGH AND AT LEAST 2' WIDE.

NOTE: MINIMUM ONE-WAY AISLE - 13'
MINIMUM TWO-WAY AISLE - 22'

7. FULL-TURN DETAIL FOR 65° PARKING ANGLE OR LESS

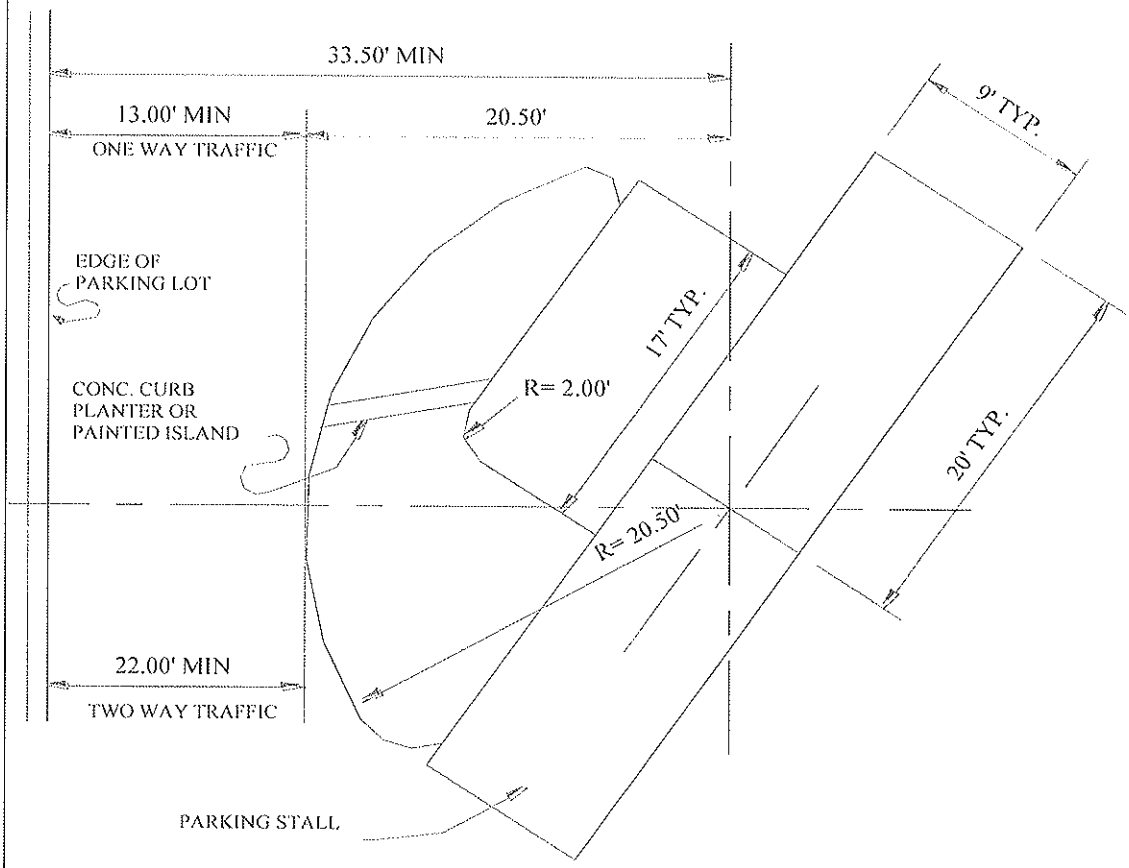

8. FULL-TURN DETAIL FOR MORE THAN 65° PARKING (STANDARD STALLS)

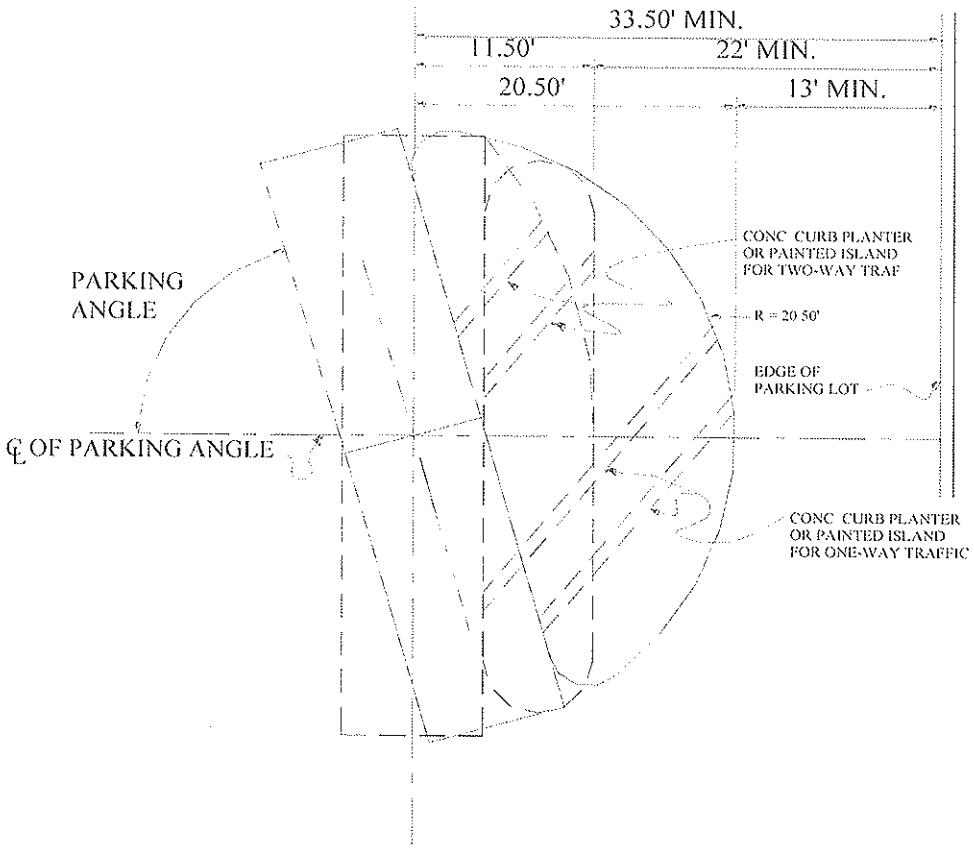

Accessible parking for people with disabilities should be consistent with current State and Federal Guidelines.

For more information about California State requirements for accessible parking, you can visit the California Division of State Architect (DSA) website at: http://www.dsa.dgs.ca.gov/Access/default.htm. You can view the DSA's California Access Compliance Reference Manual (revised June of 2006) at http://www.dsa.dgs.ca.gov/Access/ud_accessmanual.htm, and a checklist for accessible parking at: http://www.documents.dgs.ca.gov/dsa/pubs/checklists_06-16-06.pdf.

The ADA Standards for Accessible Design are available at the US Department of Justice Website: http://www.ada.gov/stdspdf.htm.

TRAFFIC PLANNING
SUBMITTAL REQUIREMENTS FOR ALL SITE PLANS

A. General Requirements
1. Sheet Size: 24" x 36" or larger
2. Scale: Site plan must be drawn to scale. Use 1"=30' or larger. Provide a north arrow.
3. Vicinity Map: Provide 4 major streets (1/2 square mile), north arrow
4. Parcel of Record: Identify the entire parcel at the time of permits and a legal description. If only a portion of an existing parcel is to be developed, a key map shall be included showing the entire parcel.
5. Phase lines: Identify
6. Property Lines: Identify and dimension existing and proposed property lines.
7. Easements: Identify and dimension all existing and proposed easements.
8. Scope of work: All items shall be listed as existing, proposed or future.

B. Offsite Information:
1. Adjacent Streets, Freeways and Railroads: Identify and provide the name of all adjacent streets, freeways and railroads.
2. Section and Center Lines: Identify all section and center lines.
3. Dedications: Identify all existing and proposed dedications. Provide a dimension from the section and center lines to the existing and proposed property lines.
4. Street Improvements: Identify existing and proposed curb, gutter, sidewalks (provide width), driveway approaches (provide width), ADA ramps (provide radius), street lights (specify if wood or metal pole), traffic signals.
5. Street furniture: Identify utility poles, boxes, guy wires, signs, fire hydrants, bus stop benches, trash receptacles, tree wells, etc.
6. ADA: Identify the required 4' minimpum path of travel along the public sidewalk adjacent to property.
7. Median Islands: Identify and specify if existing to remain, proposed or to be modified.
8. Intersections: If the proposed project is on street corner, provide the entire intersection on the site plan. If located on a major intersection also provide existing striping.
9. Canals: Identify adjacent canals and provide a proposed cross section complete with dimensions on the site plan.
10. Vacations: Identify and dimension all vacations.

C. Onsite Information:
1. Buildings: Identify and label all buildings as existing, proposed or to be removed. Provide square footage.
2. Access: Provide pedestrian, vehicular and service access. Provide turning templates for large vehicles.
3. Parking Lots: (existing and proposed)
   a. Stalls: Provide length and width. Provide number that are required, provided, compact and disability parking stalls. Identify the 3' vehicular overhang adjacent to continuous curbing. No obstructions shall be within the 3' overhang. (ground cover is allowable.)
   b. Curbs: 6" high
   c. Wheel Stops: 6" high
   d. Circulation Aisles: provide widths
   e. Walkways: provide width adjacent to parking stalls (7' min)
   f. Directional flow of traffic: Identify existing and proposed directional arrows
   g. Lighting: Identify the location (not to be within the 3' vehicular overhang)
   h. Disability parking, ramps, signage: provide details
   i. Loading zones: provide dimensions (12' x 40' min.)
   j. Planters: provide planter dimensions and radii
   k. Paving: per Public Works Standards P-41,P-42, P-43
4. Walls or Fencing: Identify existing and proposed walls and fences complete with location height and type of material.

D. Other Important Information:
1. Lot Line Adjustments: Provide reference numbers
2. Parcel or Tract Maps: Provide reference numbers
3. Traffic Impact Studies: Provide reference numbers
4. CUP/SPR: Identify previous entitlement numbers

CITY OF FRESNO - *Traffic Planning Section*
ADDITIONAL REQUIREMENTS

***PROVIDE** THE FOLLOWING NOTES ON THE SITE PLAN INDICATED BY A CHECK MARK (✓):*

☐ **1.** Any survey monuments within the area of construction shall be preserved or reset by a person licensed to practice land surveying in the State of California.

☐ **2.** Repair **all** damaged and/or off-grade concrete street improvements, as determined by the Construction Management Engineer, prior to occupancy.

☐ **3.** 2 working days before commencing excavation operations within the street right-of way and/or utility easements, all existing underground facilities shall have been located by UNDERGROUND SERVICES ALERT (USA). **CALL 1-800-642-2444**

☐ **4.** All existing driveway approaches which no longer provide access to approved vehicle parking areas shall be removed unless otherwise approved by the City Engineer. Such areas shall be reconstructed with curb, gutter and sidewalk to match existing adjacent street improvements. This works shall be completed and accepted before a Permit of Occupancy is issued or the building is occupied per Fresno Municipal Code (FMC) 11-209

☐ **5.** Submit Engineered Street Construction Plans to the Public Works Department.

☐ **6.** Submit Street Lighting Plans to the Public Works Department, Traffic Engineering.

☐ **7.** Deed(s) of easement(s) for the required dedication(s) shall be prepared by the owner/developer's engineer and submitted to the City with verification of ownership **PRIOR TO ISSUANCE OF BUILDING PERMITS.**

☐ **8.** Any construction on State Highways must conform to both City of Fresno and State Division of Highways Specifications.

☐ **9.** Construct concrete driveway approach to Public Works Standard(s) _____ and **P-4.**

☐ **10.** Construct a street-type approach to Public Works Standard(s) **P-76 / P-77.**

☐ **11.** Construct concrete curb ramp to Public Works Standard P-_____.

☐ **12.** Construct concrete sidewalks, curbs and gutters to Public Works Standard **P-5.**

☐ **13.** Install _____ feet of AC paving to Public Works Standard Specifications (To be measured from curb face).

☐ **14.** Install 30" state standard "STOP" sign(s) at location(s) shown. Sign shall be mounted on a 2" galvanized post with the bottom of the sign 7" above ground; located behind curb and immediately behind major street sidewalk. Arterial Streets: A "RIGHT TURN ONLY" sign is also required at same location, install 30" x 36" State Standard sign immediately below the "STOP" sign on the same post.

☐ **15.** The submitted project site is located within the City of Fresno's URBAN GROWTH MANAGEMENT (UGM) AREA. **UGM IMPROVEMENTS ARE REQUIRED.** Submittal of Engineered Construction plans for Public Works approval must be made **PRIOR TO ISSUANCE OF BUILDING PERMITS.** Contact the Public Works Department, Traffic Planning Section @ **559-621-8800** for details.

☐ **16.** Underground **all** existing offsite overhead utilities within the limits of this site/map as per Fresno Municipal Code (FMC) Section 12-1011 and Resolution No. 78-522/88-229.

City of Fresno Standard Specifications and Drawings available at **www.fresno.gov**

PROJECT NO: _____

CITY OF

FRESNO

STANDARD SYMBOLS

ALL ITEMS SHALL BE LABELED AS EXISTING, PROPOSED OR FUTURE

- PROPERTY & RIGHT OF WAY
- SECTION AND CENTER LINE
- EXISTING CURB
- EXISTING CURB & GUTTER
- PROPOSED CURB & GUTTER
- FUTURE CURB & GUTTER
- EXISTING INLET
- PROPOSED INLET
- OH — OVERHEAD POWER OR TELEPHONE
- P.P. — POWER POLE
- T.P. — TELEPHONE POLE
- J.P. — JOINT-USE POLE
- GUY WIRE
- GUY POLE
- POLE WITH LIGHT (SPECIFY POLE TYPE)
- TRAFFIC SIGNAL
- POWER TOWER
- TREE
- FENCE (SPECIFY TYPE & HEIGHT)
- SIGN
- F.H. — FIRE HYDRANT
- RAILROAD TRACKS

1. CONSTRUCT CONCRETE CURB & GUTTER PER P.W. STD. DWG. P-5
2. CONSTRUCT CONCRETE SIDEWALK PER P.W. STD. DWG. P-5
3. CONSTRUCT CONCRETE RAMP PER PW STD P-28, R=____
4. CONSTRUCT STREET TYPE APPROACH PER PW STD P-77 / P-78
5. CONSTRUCT CONCRETE VALLEY GUTTER PER P.W. STD. DWG. P-10
6. INSTALL ____ OF AC PAVING PER PW SPECIFICATIONS
7. CONSTRUCT DRIVEWAY APPROACH PER PW STD _____ & P-4
8. PROPOSED ON-SITE LIGHTING
9. REMOVE & REPLACE EXIST. CURB & GUTTER PER PW STD P-5
10. PROPOSED PAINTED DIRECTIONAL ARROWS
11. CONSTRUCT CONCRETE ALLEY APPROACH PER PW STD P-13
12. CONSTRUCT ALLEY PAVING PER PW STD P-12
13. INSTALL 30" STATE STD "STOP" SIGN W/ "RIGHT TURN ONLY" SIGN BELOW
14. INSTALL 30" STATE STD "STOP" SIGN
15. INSTALL PARKING LOT PAVEMENT TO PW STD.S P-41,42 & 43
16. CONSTRUCT CONCRETE RAMP PER PW STD P-29

TRAFFIC PLANNING

THE FOLLOWING NOTES INDICATED BY A CHECK MARK ARE REQUIRED ON THE SITE PLAN:

- Any survey monuments within the area of construction shall be preserved or reset by a person licensed to practice land surveying in the State of California.

- Repair all damaged and/or off-grade concrete street improvements, as determined by the Construction Management Engineer, prior to occupancy.

  2 working days before commencing excavation operations within the street right-of way and/or utility easements, all existing underground facilities shall have been located by UNDERGROUND SERVICES ALERT (USA). **CALL 1-800-642-2444**

- ☐ Contact the Public Works Department, Traffic Engineering @ 621-8800, 10 working days prior to any off-site concrete construction.

- ☐ Deed(s) of easement(s) for the required dedication(s) shall be prepared by the owner/developer's engineer and submitted to the City with verification of ownership **prior to issuance of Building Permits.**

- ☐ Underground all existing off-site overhead utilities within the limits of this application as per FMC Section 12-1011 and Reso. No. 78-522/88229.

- ☐ All existing driveway approaches which no longer provide access to approved vehicle parking areas shall be removed unless otherwise approved by the City Engineer. Such areas shall be reconstructed with curb, gutter and sidewalk to match existing adjacent street improvements. This works shall be completed and accepted before a Permit of Occupancy is issued or the building is occupied. AUTHORITY FMC 11-209

- ☐ Submit Engineered Street Construction Plans to the Public Works Department.

- ☐ Submit Street Lighting Plans to the Public Works Department, Traffic Engineering.

- ☐ All construction on State Highways must conform to both City of Fresno and State division of Highways Specifications.

- ☐ All improvements shall be constructed in accordance with the standard specifications of the city of Fresno Public Works Department or Street Construction Plans as required and approved by the City Engineer. The performance of any work within the Public Street right-of-way (including pedestrian and public utility easements) requires a street work permit **prior** to commencement of work. All required street improvements must be completed and accepted by the City **prior** to occupancy.

- ☐ The required 4' minimum path of travel shall be provided along the public sidewalk directly in front of property, as required by the California Administration Code (Title 24). **A pedestrian easement may be required if requirements are not met.**

- ☐ THE PARCEL CONFIGURATION DEPICTED DOES NOT CONFORM TO RECORD INFORMATION: A Tract Map, Parcel Map, or Lot Line Adjustment (whichever is applicable) is required to establish this configuration **prior to Building Permits. Contact the Planning and Development Department for details or submit a revised exhibit confining the proposed development within existing parcel lines.**

- ☐ STATE OF CALIFORNIA DEPARTMENT OF TRANSPORTATION (CALTRANS) FEES:
  Provide verification of payment for these fees to Traffic Planning prior to Building Permits.

10' VISIBILITY TRIANGLE EXHIBIT.

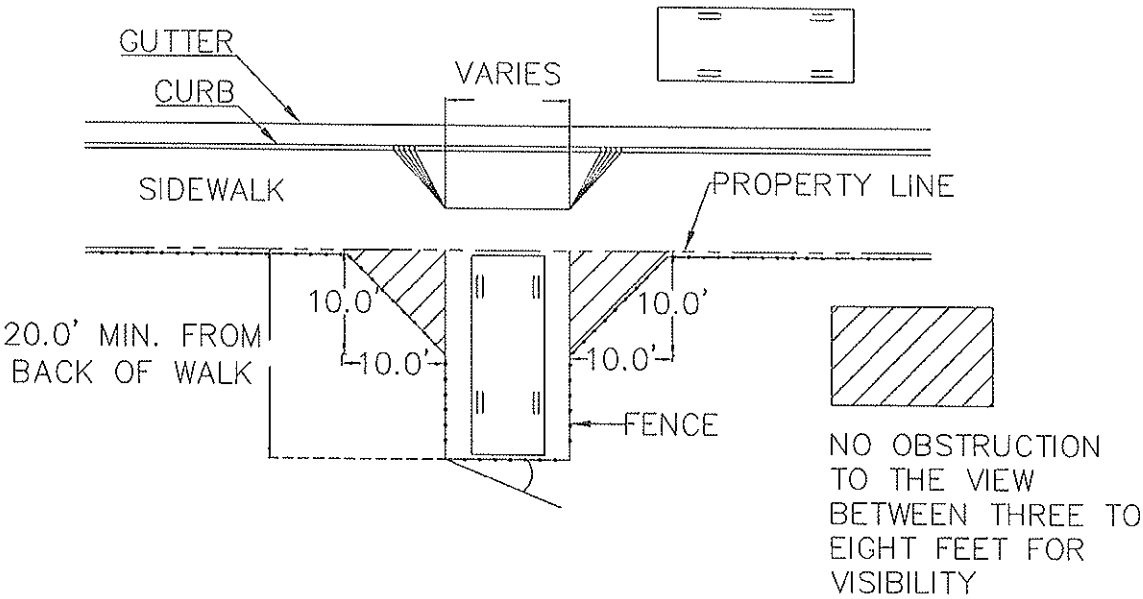

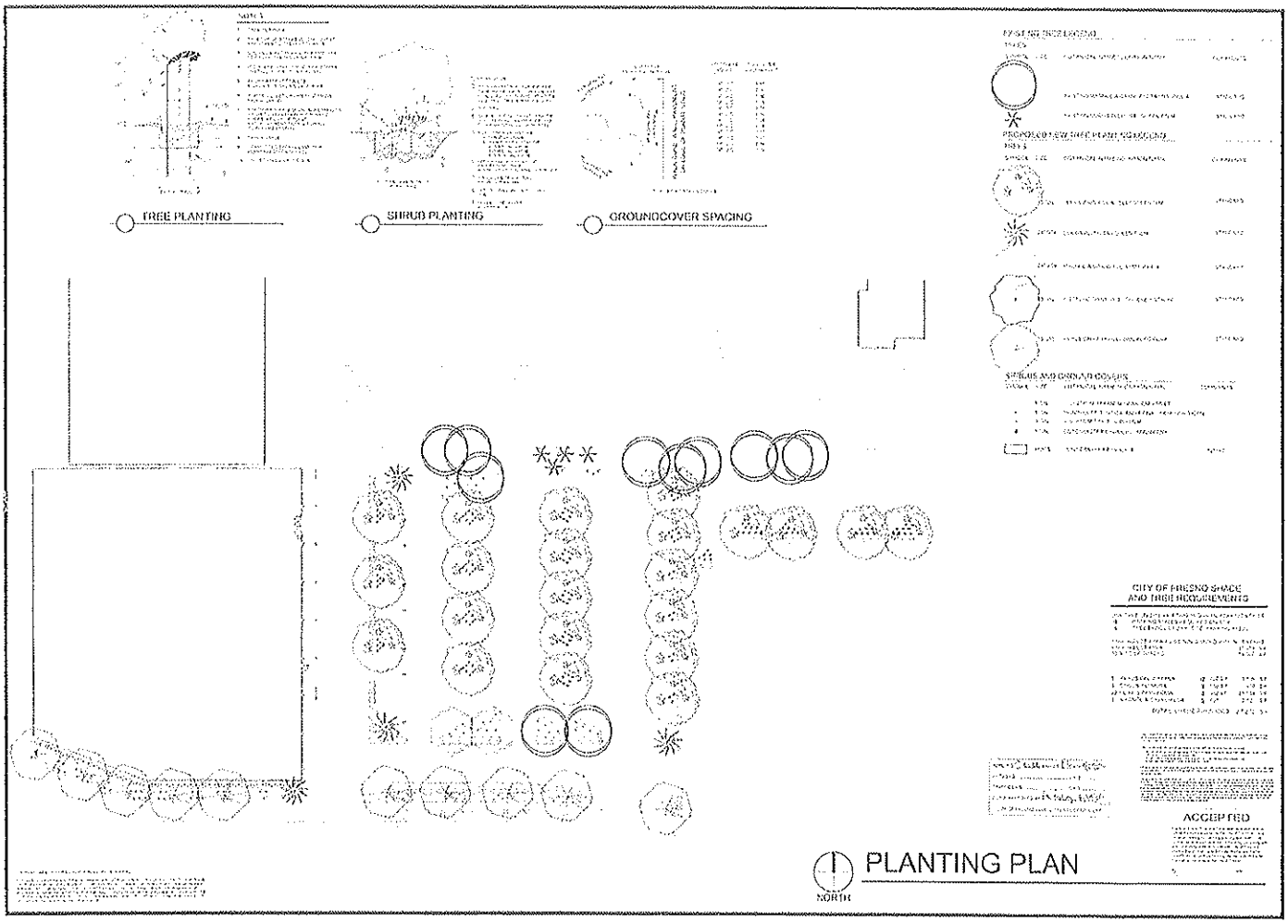
TREE PLANTING
SHRUB PLANTING
GROUNDCOVER SPACING
CITY OF FRESNO SHADE AND TREE REQUIREMENTS
ACCEPTED
NORTH
PLANTING PLAN
Riverside Landscaping
AM-VETS LANDSCAPE PLAN
FRESNO, CALIFORNIA
L-2

Several bike racks meet Fresno's design requirements, including those shown here.

Inverted "U"

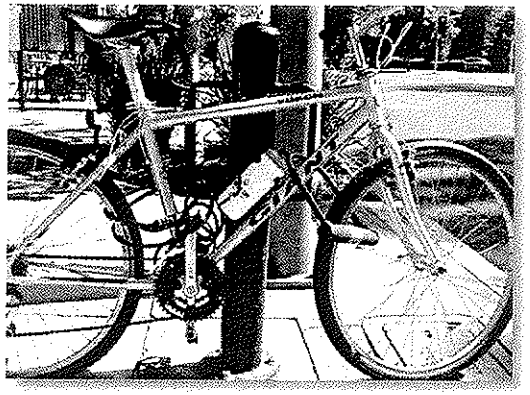

Bike Hitch

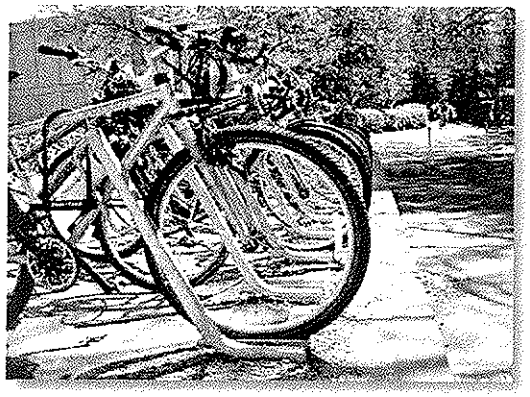

Lightning Bolt

Swerve Rack

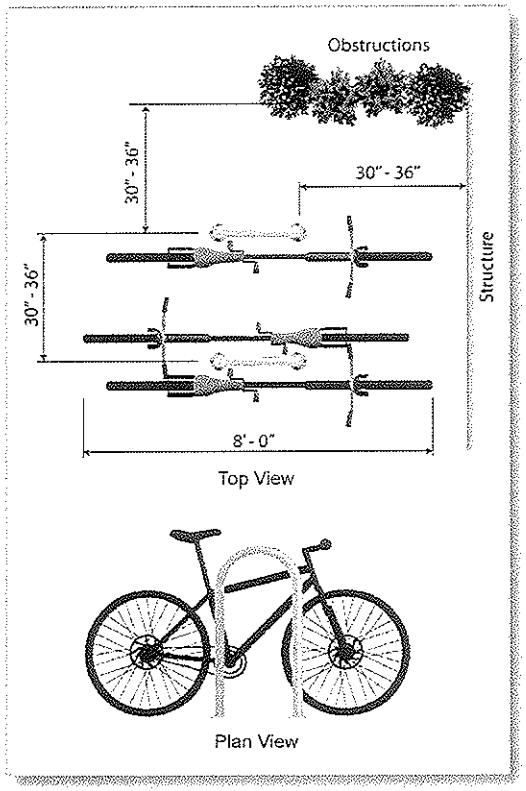

Figure 5.12 – Inverted "U" Rack

Where racks are not possible on sidewalks (because of narrow sidewalk width, sidewalk obstructions, or other issues), bicycle parking can be created in place of on-street parking spaces. Cities like Berkeley, California and Portland, Oregon have implemented these types of short-term bike parking facilities in central business districts. Racks can be clustered in a car parking space protected by bollards or curbs, which incurs only the cost of the racks, bollards, and road striping. While on-street bicycle parking may take space away from automobile parking, the auto parking loss can be mitigated. Additional auto parking spaces can be created by consolidating driveways or otherwise finding places to potentially allow auto parking where it is currently prohibited. Options for combining bicycle and motorcycle parking also exist.

Alternatively, racks can be installed on sidewalk curb extensions where adequate sight distance can be provided. A curb extension is more expensive to install and can be prohibitively expensive if substantial drainage and/or utility work is necessary. Costs may be less if the curb extension is installed as part of a larger street or pedestrian improvement project.

Note that on-street bicycle parking is an atypical design for short-term bicycle parking and no nationally accepted design guidelines currently exist.

Appropriately placed bike racks can encourage use. Table 5.7 provides recommended placement guidelines.

City of Fresno Bicycle Parking Space Requirements

Number of stalls (per the Fresno Municipal Code; Section 12-306-2.1[1]

Except as otherwise provided in this Code, the number of bicycle parking spaces to be provided shall be equal to 10% of the automobile parking spaces provided, but not to exceed a total of 10 bicycle stalls, which may be located indoors.

Fresno Municipal Code Section 12-306-I-5 (d)

Bicycle parking spaces shall each consist of one slot in a bike rack. Bicycle parking spaces shall be grouped in bicycle racks which allow four feet of clearance on all sides. There shall be adequate space between rack slots to park, lock, and remove bicycles. Bicycle parking spaces and the required four-foot clearance shall be protected from motor vehicle encroachment by means of fixed barriers not less than six inches nor more than three feet in height. Bicycle parking spaces shall not encroach into pedestrian ways, landscaped areas, or other required open space, and shall be located proximal to structures.

[1] Note that the California Building Code may result in a different number of stalls. The greater number shall be used.

44' FOOT CENTERLINE / TYPICAL SOLID WASTE TRUCK TURNING RADIUS

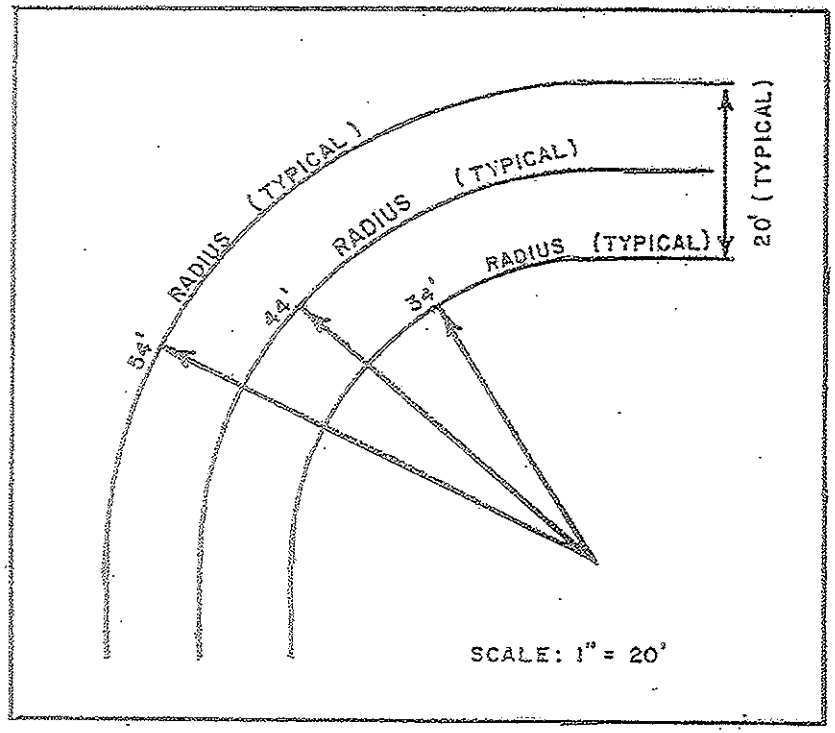

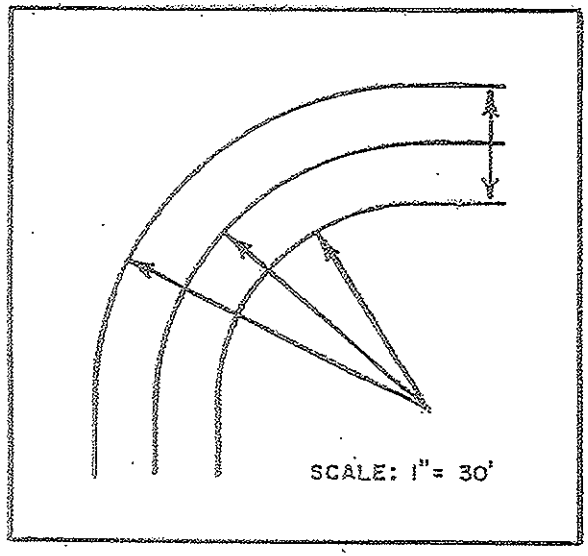

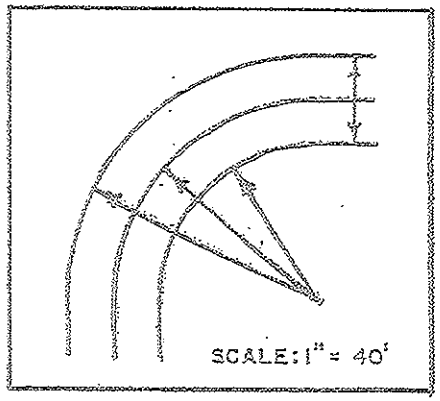

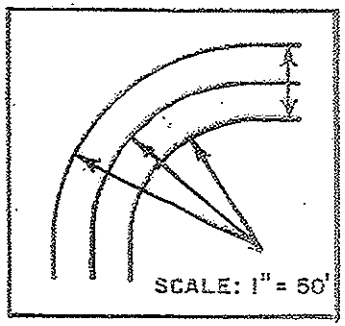

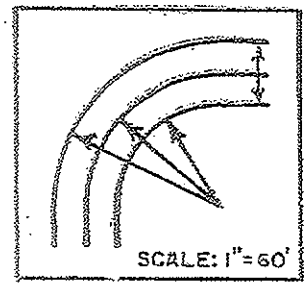

CITY OF FRESNO
Traffic Impact Study Report Guidelines

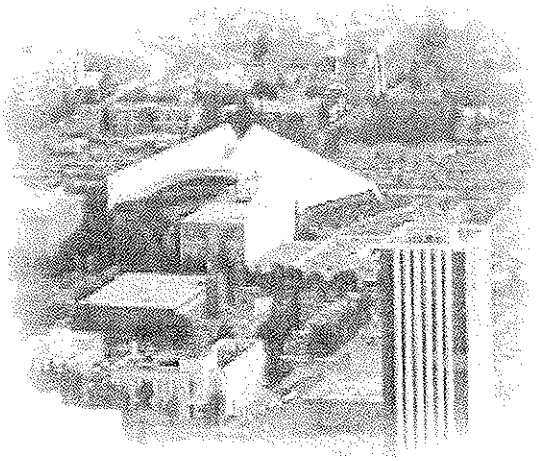

Excellence Matters

October 18, 2006

Prepared by City of Fresno
Department of Public Works

Jon Ruiz, Interim Public Works Director
Michael T. Kirn, PE, City Engineer
Scott L. Mozier, P.E., Assistant Public Works Director
Bryan D. Jones, T.E., Interim Traffic Engineering Manager

TRAFFIC IMPACT STUDY GUIDELINES

1.0 PURPOSE

The purpose of the City of Fresno Traffic Impact Study Guidelines is to establish general procedures and requirements for the preparation of traffic impact studies associated with development within the City of Fresno. The term "**guidelines**" is important in that we recognize that every project and study context is unique. These guidelines are intended as a check-list for study preparers to be sure they have not missed any regular study items. They are not intended to be prescriptive to the point of eliminating professional judgment or creativity. A traffic impact study should be a stand alone document that could be reproducible by a peer consultant or City staff based on the information provided in the document.

2.0 WHEN TRAFFIC IMPACT STUDIES ARE REQUIRED

Unless waived by the Traffic Engineering Manager, a Traffic Impact Study (TIS) will be required by the City to adequately assess the impacts of development projects on the existing and/or planned street system under the following conditions:

1. When project-generated traffic is expected to be greater than one hundred (100) vehicle trips during any peak hour.
2. When a project includes a General Plan Amendment (GPA) which changes the land use.
3. When the project traffic will substantially affect an intersection or roadway segment already identified as operating at an unacceptable level of service.
4. When the project will substantially change the off-site transportation system or connection to it as determined by the Traffic Engineering Manager.

A traffic impact study requires updating when it has been two or more years with no activity, since the existing traffic impact study was completed. After two years the existing TIS is considered antiquated and irrelevant. In cases where a master traffic impact study is prepared for a large development, the specific phases will generally not require supplemental traffic impact studies, as long as, the master traffic impact study analyzed the large development in phases and the specific phases are consistent with the master traffic study.

3.0 TRAFFIC IMPACT STUDY AREA

The intersections and roadway segments to be covered by traffic impact studies will be determined on a case-by-case basis and shall be sufficient in size to include existing and planned streets and intersections that may be impacted by the proposed development. The scope of the TIS, including the study area, proposed trip distribution, and trip generation

shall be reviewed and approved by the Traffic Engineering Manager or designee prior to preparation of the study.

The applicant shall also consult with the State of California Department of Transportation (CALTRANS) to determine the California Environmental Quality Act (CEQA) levels of significance with regard to traffic impacts on CALTRANS' freeway facilities. This consultation shall also include a determination of CALTRANS requirements for the study of traffic impacts to its facilities and the mitigation of any such impacts shall be considered when scoping and determining impacts on CALTRANS' controlled facilities. This analysis must follow the most current CALTRANS Guide for the Preparation of Traffic Impact Studies (December 2002) and can be obtained from http://www.dot.ca.gov Correspondence with CALTRANS shall be provided to the City Traffic Engineering Department.

The applicant shall also consult with the County of Fresno to determine the CEQA levels of significance with regards to traffic impacts on County roadway facilities. Correspondence with the County shall be provided to the City Traffic Engineering Department.

4.0 LEVELS OF SERVICE

All City intersections and roadway segments shall operate at a LOS D or better under the near-term conditions, unless a finding of overriding consideration was adopted in the Master General Plan EIR. Under long-term conditions (Year 2025 Conditions) all City intersections and roadway segments shall operate at a LOS D or better, except for the roadway segments adopted in the Master General Plan EIR to operate at LOS E or F. The LOS shall be based on average delay for signalized and unsignalized intersections and Florida Tables for roadway segments. Average delay for study intersections shall be summarized in a table. The traffic analysis methodologies for the facility types indicated below will be accepted without prior consultation.

- Signalized Intersections[1] – Highway Capacity Manual* using Highway Capacity Software (HCS), TRAFFIX, Synchro, or other software approved by the City Traffic Engineer
- Unsignalized Intersections – Highway Capacity Manual* using HCS, TRAFFIX, SimTraffic, or other software approved by the City Traffic Engineer
- Signal Warrants – MUTCD Signal Warrants*
- Roadway Segments – HCM*, Florida Tables

* Most current edition of the Highway Capacity Manual by Transportation Research Board, and MUTCD shall be used.

[1] The procedures in the Highway Capacity Manual do not explicitly address operations of closely spaced signalized intersections. Under such conditions, several unique characteristics must be considered, including spill-back potential from the downstream intersection to the upstream intersection, effects of downstream queues on upstream saturation flow rate, and unusual platoon dispersion or compression between intersections. An example of such closely spaced operations is signalized ramp terminals at urban interchanges. Queue intersections between closely spaced intersections may seriously distort the procedures in the HCM. In this case simulation of the study area maybe necessary as determined by the City Traffic Engineering Manager.

While the City of Fresno does not officially advocate the use of any software, Synchro is the software used by City staff. The LOS analysis at study intersections shall be conducted using the following default values as applicable:

- Use of signal timing plans, if available. If not available, then:
  - Minimum split time for protected left-turn phase shall not be less than 12 seconds if volumes warrant the need.
  - Minimum pedestrian times should be satisfied on all phases with pedestrian phase for signals modeled as coordinated signals.
  - For study intersections modeled as actuated uncoordinated signals, the intersections shall be evaluated with at-least 10 pedestrian calls per hour in the Existing + Project and 2025 Conditions, if pedestrian projections are not available.
  - If existing cycle lengths are available they should be utilized. In instances were existing cycle lengths are not available, LOS calculations should be conducted using the natural cycle lengths. The cycle lengths should remain constant for comparison purposes unless the project is changing the character of the intersection and it is noted in the report.
  - In instances where signalized intersections are coordinated, coordinated cycle lengths should be determined based on the natural cycle lengths of the coordinated signals and shall be used for evaluation purposes.
  - Minimum All-Red time(s) shall equal 1.0 seconds.
  - Minimum Yellow time shall equal 3.5 seconds, or greater based upon the approach speeds.
- Where existing traffic volumes are collected and peak hour factors are available, then LOS calculations for Existing Condition scenarios and the near-term scenario should use available peak hour factors provided the traffic counts are included in the Appendix. For all cumulative scenarios and existing conditions were peak hour factors are not available, factors as per the HCM shall be used and shall be consistent throughout the cumulative scenarios and peak hours.
- Existing storage lengths shall be entered as input data if LOS calculations are conducted using Synchro.

5.0 TRAFFIC ANALYSIS SCENARIOS

The following scenarios shall be included in the traffic impact study:

A. For projects requiring a General Plan Amendment, intersection LOS analysis and calculation work sheets, as well as figures showing turning volumes and lane configurations shall be included in the report for the following traffic scenarios.

   a. Existing Conditions – Current year traffic volumes and peak hour LOS analysis
   b. Existing plus Project Conditions – Trip generation and trip distribution added to the previous scenario and LOS analysis

c. Near Term Analysis (Existing plus Approved and Pending Projects plus Proposed Project Conditions) – Trip generation and trip distribution added to the previous scenario and LOS analysis
d. Cumulative Year 2025 Conditions – Year 2025 build-out conditions (LOS analysis) as per the General Plan (20 years from existing conditions and consistent with the latest Fresno COG model)
e. Cumulative Year 2025 plus Proposed Project Conditions – Project traffic added to the previous scenario and LOS analysis
f. If any phasing is to take place then such phasing should be studied at its appropriate build out year in addition to the above scenarios.
g. Trip traces to affected Caltrans freeway interchanges shall be performed for the current General Plan land use and the land use proposed per the GPA.

B. For projects with the planned land uses as called for in the 2025 General Plan, intersection LOS analysis and calculation work sheets, as well as figure showing turning volumes shall be included in the report for the following traffic scenarios.

a. Existing Conditions – Current year traffic volumes and peak hour LOS analysis
b. Existing plus Project Conditions – Trip generation and trip distribution added to the previous scenario and LOS analysis
c. Near Term Analysis (Existing plus Approved and Pending Projects plus Proposed Project Conditions) – Trip generation and trip distribution added to the previous scenario and LOS analysis
d. Cumulative Year 2025 Conditions – Year 2025 build-out conditions (LOS analysis) as per the General Plan (20 years from existing conditions and consistent with the latest Fresno COG model)
e. If any phasing is to take place then such phasing should be studied at its appropriate build out year in addition to the above scenarios.
f. Trip distribution to affected Caltrans freeway interchanges shall be performed for the proposed project.

Year 2025 Conditions traffic volumes shall be projected based on the method documented by Fresno County Council of Governments (COG) model steering committee using procedures such as the increment method and TurnsW32. The City of Fresno is requesting a consistent approach to the development of Cumulative 2025 traffic volumes. The methodology for developing the forecasts shall be clearly documented in the report and model runs provided by Fresno COG included in the appendix. The following scenarios shall be requested from Fresno COG staff to perform this forecasting correctly:

Current Year Model Run (Existing Conditions Model),
2025 No Project Model Run (Cumulative Conditions Model),
2025 Project SelectZone FRATAR Model Run, and
Near-term opening year model run if necessary.

Please contact Fresno COG staff and/or review the Fresno COG webpage for the correct use of the model to forecast Cumulative volumes.

6.0 TRAFFIC COUNTS

Traffic counts should be collected and included in the Appendix. Available existing counts can be used if they are less than twelve (12) months old and the counts have not be significantly changed due to more recent development in the vicinity. The traffic engineering manager or the designee shall approve all requests to use existing available counts.

Common rules for conducting traffic counts include but are not limited to:

- Peak hour turning movement volumes shall be conducted on Tuesdays, Wednesdays, or Thursdays during weeks not containing a holiday. Counts shall be conducted in favorable weather conditions.
- Counts shall be collected when schools and colleges are in session, but not during the first two weeks that the schools and colleges are in session. Counts collected when schools and colleges are not in session shall be approved by the Traffic Engineering Manager, including a methodology for adding historical school traffic volumes in to the analysis.
- Counts shall be collected during AM (7:00 a.m. to 9:00 a.m.) and PM (4:00 p.m. to 6:00 p.m.) peak hours, unless otherwise specified (such as midday or weekend peak periods).
- Counts should include the peak hour factor calculation.

7.0 TRIP GENERATION

Trip generation should be based on one or more of the following:

- Institute of Transportation Engineers (ITE) Trip Generation Manual (most current edition).
    - Rates should be calculated using the average weight or weighted average formula when applicable
    - Special consideration should be given for ITE rates based on antiquated data or a small sample may require additional data collection to determine the appropriate trip generation
- New rates should be generated using community examples for uses not updated or included in the ITE Trip Generation Manual.
- No pass-by trip reductions are allowed unless justified to and approved by the City Traffic Engineer.

Projected daily trips, AM and PM peak hour trips for the approved, pending and proposed project shall be summarized in the table. Trip generation rates, factors and source should be provided. Trip generation should be summarized in a table form as follows:

Proposed Trip Generation for Weekday

	Size		Daily		A.M. Peak Hour					P.M. Peak Hour				
			*	Trips	*	In:Out	In	Out	Total	*	In:Out	In	Out	Total
Retail	4	ksf	120	480	4	60:40	12	8	19	11	50:50	26	26	53
Towahomes	32	Apts	7.5	240	10	35:65	8	16	24	10	65:35	16	8	24
Senior Housing	100	Units	3.6	360	12	40:60	17	26	43	12	60:40	26	17	43
Total Trips				**1,080**			**37**	**49**	**86**			**68**	**52**	**120**

* = Rate

8.0 TRIP DISTRIBUTION

A figure illustrating the percentage of peak hour traffic going to and from various destinations along the transportation network shall be provided. Trip distribution shall be based on existing travel patterns, locations of complimentary land uses, and model runs of the Fresno Council of Governments Travel Model. A figure illustrating peak hour project only trips at the driveways, study intersections and roadway segments shall be provided based on the trip distribution. If the trip distribution is different between existing, near-term, and cumulative conditions then a figure needs to be provided for each different trip distribution with supporting discussion and justification. The model should be used for a general trip distribution to and from the North, South, East, and West, however the project trips should be manually distributed to the driveways, intersections, and roadway segments. Please do not rely on the model to distribute project trips. For General Plan Amendments, the TIS shall include a trip distribution to affected Caltrans freeway interchanges for both the current General Plan land use and the proposed land use per the GPA.

9.0 APPROVED AND PENDING PROJECTS

Approved and pending projects located within the vicinity of the project (i.e. developments generating vehicle trips that would impact study intersections and/or roadway segments) or as determined by Traffic Engineering Manager, that can reasonably be expected to be in place by the project's build out year must be included in the analysis. Related projects shall include all approved, pending, or constructed projects that are not occupied at the time of the existing traffic counts. A list of approved and pending projects shall be submitted to Traffic Engineering Section for review and approval along with the scope of work. Traffic Engineering staff will work with consultants to develop the list if necessary. A table summarizing the approved and pending projects with their locations, and trip generation shall be provided. If conditional use permit/parcel map/tract numbers are available then they should be provided in the table. Pending projects are defined as those projects that have been accepted for processing by the City of Fresno Planning and Development Department.

10.0 SITE ACCESS AND CIRCULATION

Site access and circulation analysis shall be conducted and recommendations shall be included in the TIS to address safe and acceptable traffic operations. A figure illustrating the proposed site plan with proposed primary access points should be provided. Discussion on the location and distance of the access points from nearby intersections should also be provided. The proposed site plan should illustrate access points and peak hour project only trips at the access points. The TIS should calculate anticipated queues and minimum required throat depth (MRTD) at the project access points and summarize in a table. The analysis should also evaluate the proposed site plan for sight distance and other unsafe traffic conditions and provide recommendations to mitigate them. The TIS shall also conceptually address safe pedestrian paths of travel from

- residential developments to school sites,
- public streets to commercial and residential areas, and
- nearby bus stops to project sites.

11.0 QUEUING AT STUDY INTERSECTIONS

Queuing analysis for study intersections shall be conducted and documented in the TIS based on the LOS calculations. Recommendations for queues under existing conditions or projected to exceed the available storage shall be provided. Recommendations such as but not limited to extending existing storage, addition of exclusive turn-lanes, innovative techniques shall be considered and recommended.

12.0 SIGNIFICANT IMPACT THRESHOLD

For study intersections, the impact is considered significant if the addition of the traffic generated from the proposed project results in any one of the following:

- Triggers an intersection operating at acceptable LOS to operate at unacceptable levels of service
- Triggers an intersection operating at unacceptable LOS (LOS E) to operate at LOS F.
- Increases the average delay for a study intersection that is already operating at unacceptable LOS.

13.0 ANALYSIS DISCUSSION

The TIS should discuss conclusions regarding the adverse impacts caused by the proposed project on the roadway system. If the cumulative traffic impact of this and other projects require mitigation measures, that are not covered by current Urban Growth Management (UGM) or traffic signal impact fees, then the project's fair share percentage shall be calculated using peak-hour volumes and provided to the Traffic Engineering Manager in the TIS.

For all recommendations to increase the number of travel lanes on a street or at an intersection as a mitigation measure, the report must clearly identify the impacts associated with such a change such as whether or not additional right of way will be required and whether it is feasible to acquire the right of way based on the level of development of the adjacent land and buildings (if any).

The TIS should discuss other possible adverse impacts on traffic. Examples of these are: (1) the limited visibility of access points on curved roadways; (2) the need for pavement widening to provide left-turn and right-turn lanes at access points into the proposed project; (3) the impact of increased traffic volumes on local residential streets; and (4) the need for road realignment to improve sight distance.

Projects which propose to amend the City's General Plan Land Use and substantially increase potential traffic generation must provide an analysis of the project at current planned land use versus proposed land use in the build out condition for the project area, including future 2025 conditions. The purpose of such analysis is to provide decision makers with the understanding of the planned circulation networks ability to accommodate additional traffic generation caused by the proposed General Plan Land Use amendments.

14.0 TRAFFIC IMPACT STUDY - REPORT FORMAT

COVER PAGE

1. Project address
2. Project name (if applicable)
3. Prepared for
4. Date (month/day/year)
5. Consultant contact information including a contact name
6. Consultant job number (if applicable)
7. City Reference Number (i.e. TIS XX-XXX)
8. Entitlement Number (i.e. Tract or CUP Number)
9. City Planner Name (if known)
10. Stamp and/or signature of qualified engineer or authorized owner/principal of firm stating the study was prepared and reviewed under their supervision and direction.

This Traffic Impact Study has been prepared under the direction of _____. _____attests to the technical information contained therein and has judged the qualifications of recommendations, conclusions, and decisions are based on City of Fresno guidelines, general engineering standards, and California/Federal laws.

TABLE OF CONTENTS
LIST OF FIGURES
LIST OF TABLES

EXECUTIVE SUMMARY

Provide summary of the TIS, project location and size, intersections analyzed, study scenarios, impacts, mitigation and recommendations in a figure and table. Methodology used to analyze the impacts does not need to be included in the executive summary. Document results of LOS analysis, intersections and roadway segments Provide summary of site access and circulation. Results of LOS analysis should be summarized in a table form as follows for both existing and cumulative scenarios:

Summary of Intersection Level of Service

Intersection	*Existing*		*Existing plus Proposed Project*		*Existing plus Approved and Pending plus Proposed Project*	
	Delay	*LOS*	*Delay*	*LOS*	*Delay*	*LOS*

INTRODUCTION

Provide description of the project, location, size and proposed primary access. A vicinity map showing the site location and the study area relative to other transportation systems along with study intersections and roadway segments should be provided. Document study intersections, roadway segments and study scenarios providing brief explanation on each study scenarios. Describe the methodology used to analyze the impacts of the study and the thresholds for determining an impact.

EXISTING CONDITIONS

Provide a description of existing streets and roadways within the project site (if any) and in the surrounding area. Include information on the roadway classifications (per the City of Fresno Circulation Element), the number of lanes, posted speed limits, divided/undivided and bike lanes.

Existing daily directional and peak-hour through and turning traffic volumes on the roadways surrounding and/or logically associated with the project site, including major highways and freeways. Local streets affected by the project should also be shown. Each report shall include appendices providing count data used in the preparation of the report. The source and date of the traffic volume information shall be indicated. A figure illustrating the peak hour traffic volumes, lane configurations, and traffic control at the study intersections and roadway segments should be provided.

All assumed roadways and intersections or any other transportation circulation improvements must be identified and discussed. The discussion should include the scope and the status of the assumed improvements including the construction schedule and financing plan.

In addition any transit facilities within 1,300 feet of the project or study intersections/roadways segments, including the service provider(s), routes, frequency and location/amenities of existing bus stops should be provided.

Existing and planned bicycle and pedestrian facilities adjacent to the project site, utilized by the project, connected to by the project, or impacted by the project should be identified and described in detail.

Results of LOS analysis should be summarized in table (in a format illustrated above) and discussed. If any of the study intersections or roadway segments are operating at unacceptable levels, mitigation measures should be identified.

EXISTING PLUS PROPOSED PROJECT CONDITIONS

This scenario is required by CEQA to show the impacts of the proposed project on the existing conditions. It should include a project description, trip generation and distribution, level of service analysis, and appropriate tables, figures, and recommendations/mitigation as described below.

Project Description

A description of the project, including factors which quantify traffic generators, e.g., dwelling units, square feet of office space, persons to be employed, restaurant seats, acres of raw land, etc. Provide site plan including access, project only trips at the access points, circulation, parking, and loading as applicable.

Trip Generation and Trip Distribution

Provide trip generation and trip distribution as per Section 7.0 and 8.0 of this document. Provide any relevant information, discussion if applicable.

Level of Service Analysis

Provide a figure illustrating peak hour traffic volumes at the study intersections and roadway segments for Existing plus Proposed Project Conditions. Results of LOS analysis should be summarized in table and discussed. If any of the study intersections or roadway segments are projected to operate at unacceptable levels, mitigation measures should be identified.

Site Access and Circulation

Provide site access and circulation analysis and discussion as per Section 10.0 of this document. Provide a figure showing on site and circulation recommendations.

NEAR-TERM ANALYSIS (EXISTING PLUS APPROVED AND PENDING PROJECT PLUS PROPOSED PROJECT CONDITIONS)

Approved and pending projects located within the vicinity of project, (projects that would impact study intersections and/or roadway segments or as determined by Traffic Engineering Manager), that can reasonably be expected to be in place by the

project's construction year along with the trip generation should be summarized in a table. A figure illustrating the Existing plus Approved and Pending Projects Plus Proposed Project peak hour traffic volumes should be provided.

Results of LOS analysis should be summarized in table and discussed. If any of the study intersections or roadway segments are projected to operate at unacceptable levels, mitigation measures should be identified.

CUMULATIVE YEAR 2025 AND CUMULATIVE YEAR 2025 PLUS PROJECT CONDITIONS

Provide similar information for both scenarios as above referenced scenarios. Please discuss in detail how the traffic volume forecasts were developed using the Fresno COG model. This information should be easy to follow and reproducible by a peer consultant and/or City of Fresno staff.

QUEUING

Discuss and provide recommendations to mitigate unacceptable queues at study intersections under appropriate scenarios as applicable.

SIGNAL WARRANTS

Provide signal warrants analysis and discuss results of the analysis under appropriate scenarios as applicable.

CONCLUSION

MITIGATIONS & RECOMMENDATIONS

Provide objective recommendations in a table or figure and discuss the timing and funding of recommendations.

APPENDIX

Traffic Counts
Fresno COG Model Runs and Turning Movement Forecast outputs
Signal Warrants
References and Bibliography
Level of Service Calculation sheets

15.0 TRAFFIC IMPACT STUDY – SCOPE OF WORK REQUESTS

The applicant or consultant shall provide to the Traffic Engineering Manager or the appointed designee the project location, size, land use and proposed primary access. The list of proposed study intersections, roadway segments and scenarios shall be included in the scoping request. Typically the roadway segments between study intersections should be studied. Please also contact other potentially affected agencies such as Caltrans District 6, County of Fresno, County of Madera, and City of Clovis.

ENCLOSURE SCALE / STANDARD

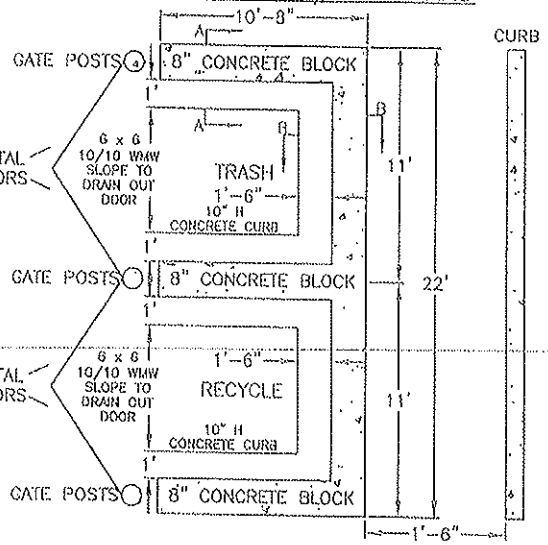

ENCLOSURE SCALE / RESTAURANT

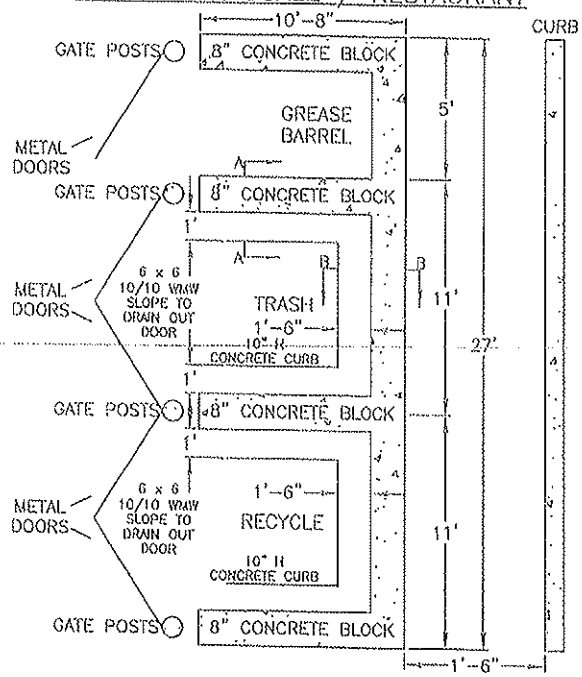

ENCLOSURE SCALE/ CURB ONLY
ZONES-M1,M2,M3, & CM ONLY

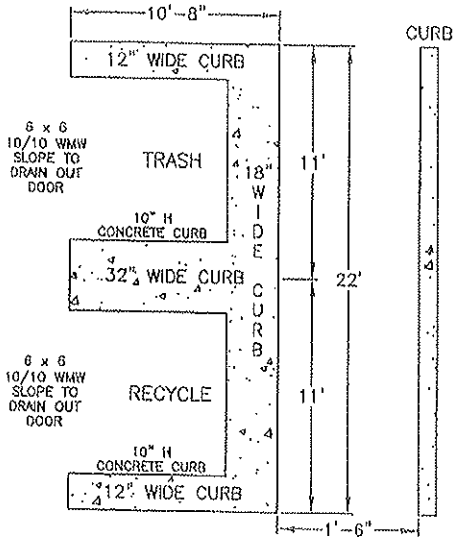

NOTES:

1. ALL CONSTRUCTION SHALL COMPLY WITH THE FRESNO MUNICIPAL CODE.
2. GROUT ALL CELLS.
3. ALL MASONRY UNITS SHALL COMPLY WITH THE LATEST ADOPTED CALIFORNIA BUILDING CODE AND U.B.C. STANDARD 24-4 GRADE N.
4. ALL MASONRY WALLS SHALL BE INSPECTED BY THE CITY OF FRESNO DEVELOPMENT DEPARTMENT.
5. DEPTH OF FOOTINGS ARE INTO NATURAL UNDISTURBED SOIL OR TESTED AND APPROVED COMPACTED FILL.
6. ALL MASONRY UNITS SHALL BE MINIMUM F'M=1500 PSI.
7. REINFORCING STEEL SHALL BE DEFORMED BAR, MIN. GRADE 40.
8. FOOTING CONCRETE SHALL BE A MINIMUM 2000 PSI AT 28 DAYS.
9. MORTAR SHALL BE TYPE-S (MINIMUM 1800 PSI AT 28 DAYS).
   ONE (1) PART CEMENT, TYPE-1
   ONE-HALF (1/2) PART LIME PUTTY OR HYDRATED LIME.
   FOUR AND ONE-HALF (4 1/2) PARTS SAND (MAXIMUM).
10. GROUT SHALL BE A MINIMUM 2000 PSI AT 28 DAYS.
    ONE (1) PART CEMENT.
    THREE (3) PARTS SAND.
    TWO (2) PARTS PEA GRAVEL.
11. FINISH PAD ELEVATION TO BE FLUSH WITH GRADE AT ACCESS PAVEMENT.
12. ANY GATE HINGES SHOULD BE LOCATED ON THE OUTSIDE.
13. METAL DOORS ARE REQUIRED ON ALL ENCLOSURES, CHAIN LINK IS NOT ACCEPTABLE.
14. 8" CONCRETE BLOCK TO BE USED FOR WALLS.
15. 2 CELLS ARE REQUIRED FOR COMMERCIAL/INDUSTRIAL BUILDINGS.
16. 3 CELLS ARE REQUIRED FOR RESTAURANTS.

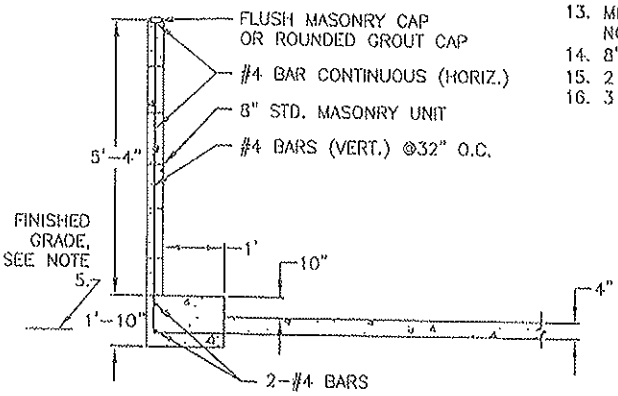

VIEW "A-A"

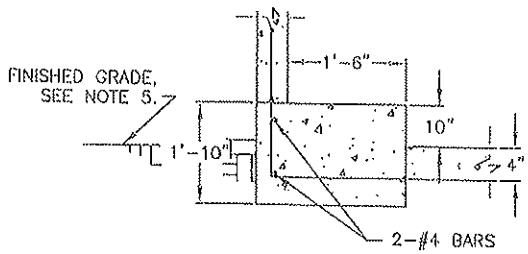

VIEW "B-B"

TYPICAL SECTION W/ CONCRETE BLOCK WALL

TYPICAL REFUSE CONTAINER ENCLOSURE DETAILS	REF. & REV. AUG., 2010	CITY OF FRESNO P-33

GENERAL NOTES:

1. ALL SITE PLANS SHALL HAVE THE SIGNATURE APPROVAL OF A SOLID WASTE MANAGEMENT DIVISION REPRESENTATIVE.
2. CONTAINERS USED AT ALL PLACES SHALL BE PLACED FOR COLLECTION AT SERVICE LOCATIONS APPROVED BY THE PUBLIC UTILITIES DIRECTOR, OR HIS/HER DESIGNEE, BUT SHALL NOT BE STORED IN THE PUBLIC RIGHT-OF-WAY.
3. THE DESIGN OF ANY NEW, SUBSTANTIALLY REMODELED, OR EXPANDED BUILDING OR OTHER FACILITY SHALL PROVIDE FOR PROPER STORAGE OR HANDLING WHICH WILL ACCOMMODATE THE SOLID WASTE LOADING ANTICIPATED AND WHICH WILL ALLOW FOR SAFE AND EFFICIENT WASTE REMOVAL.
4. THE PUBLIC UTILITIES DIRECTOR, OR HIS/HER DESIGNEE, SHALL PLAN WITH THE PROPERTY OWNER AND/OR THEIR REPRESENTATIVE AS TO PLACEMENT OF STORAGE CONTAINERS TO MINIMIZE TRAFFIC, AESTHETIC AND OTHER PROBLEMS BOTH ON THE PROPERTY, AND FOR THE GENERAL PUBLIC.
5. BELOW IS A CHECKLIST OF REQUIREMENTS REVIEWED FOR A SITE PLAN:
   a. REFUSE, RECYCLABLES, AND GREASE BARRELS SHALL BE STORED FOR LATER REMOVAL FROM THE PREMISES IN AN AREA THAT IS SCREENED FROM VIEW OF THE PUBLIC STREETS BY A CITY OF FRESNO, PUBLIC UTILITIES APPROVED STANDARD ENCLOSURE (REFER TO P-33, P-34, AND P-95 FOR DETAILS). APPROVED STANDARD ENCLOSURES ARE TO BE BUILT USING EIGHT INCH (8") CONCRETE BLOCK AT A HEIGHT OF SIX FEET (6').
   b. ENCLOSURES BUILT IN (INDUSTRIAL ZONES) M-1, M-2, M-3, AND CM ZONES REQUIRING DIRECTOR APPROVAL, OR HIS/HER DESIGNEE, MAY ELIMINATE WALLS AS LONG AS IT IS NOT VISIBLE FROM A MAIN STREET. FOR THIS DESIGN, THE CURBING WILL BE TWELVE INCHES (12") WIDE ON BOTH SIDES, EIGHTEEN INCHES (18") DEEP ALONG THE REAR WITH A THIRTY-TWO INCH (32") WIDE CURB SEPARATING THE TWO CELLS. CURBING MUST BE REINFORCED WITH REBAR AT A HEIGHT OF TEN INCHES (10"). ALL ENCLOSURES SHALL BE A MINIMUM OF EIGHTEEN INCHES (18") FROM THE NEAREST CURB. ALL OTHER PUBLIC WORKS DESIGN REQUIREMENTS SHALL BE MET DURING REVIEW.
   c. THE APPROVED STANDARD ENCLOSURE HAS BEEN DESIGNED TO ACCOMMODATE ALL SIZES OF CONTAINERS TO HANDLE THE ACCUMULATION OF WASTE AND RECYCLABLES GENERATE BETWEEN COLLECTIONS. A STORAGE AREA WITH INNER DIMENSIONS TEN FEET (10') BY TEN FEET (10') IS THE MINIMUM. THERE SHALL BE CURBING TWELVE INCHES (12") FROM SIDE WALLS AND EIGHTEEN INCHES (18") FROM REAR WALL AND AT A HEIGHT OF TEN INCHES (10"). THESE FEATURES ARE INCLUDED IN ORDER TO REDUCE THE POSSIBILITY OF DAMAGE TO THE ENCLOSURE ITSELF.
   d. SERVICE ACCESS TO ENCLOSURE SHALL BE A MINIMUM UNENCUMBERED OPENING OF EIGHT FEET (8'). THE GATE TO BE USED SHALL BE BUILT OF METAL, CHAIN LINK IS NOT ACCEPTABLE, SO THAT BINS CANNOT BE SEEN WHEN GATES ARE CLOSED AND SHALL BE MOUNTED ON THE OUTER SURFACE OF ENCLOSURE AS TO NOT PROTRUDE INTO SERVICE ACCESS OPENING. HARDWARE LATCHES SHOULD BE A HEAVY GAUGE LOCKING GATE LATCH. TWO GATES ARE REQUIRED ON EACH CELL WITH THE EXCEPTION OF THE GREASE BARREL CELL.
   e. THE FLOOR OR BOTTOM SURFACE OF THE COLLECTION AREA SHALL BE MADE OF CONCRETE, (SLOPED) ONE PERCENT (1%) TO THE FRONT, AND THERE SHALL NOT BE ANY DRAINAGE GUTTER IN FRONT OF ENTRANCE. THE UNENCUMBERED OPENING OF EIGHT FEET (8') REFERENCED IN D. ABOVE SHALL BE A LEVEL SURFACE. THE FLOOR SHALL NOT SLOPE TO THE BACK OR SIDES OF THE ENCLOSURE TO ALLOW DRAINAGE TO THE REAR OF THE AREA OR CAUSE ANY STANDING WATER WITHIN THE ENCLOSURE. IT SHALL BE CONSTRUCTED SO THE COLLECTION VEHICLE CAN DRIVE DIRECTLY INTO THE POCKETS OF THE CONTAINERS WITHOUT ANY OBSTRUCTIONS.
   f. INGRESS AND EGRESS SHALL HAVE AN UNOBSTRUCTED OVERHEAD CLEARANCE OF SIXTEEN FEET (16') AND SHALL NOT BE LESS THAN EIGHTEEN FREE (18') WIDE AND CAPABLE OF ACCOMMODATING A TRUCK WITH A TWO HUNDRED FIFTY INCH (250") WHEELBASE, A FORTY-FOUR FOOT (44') (CENTER LINE) TURNING RADIUS AND A SUPPORT WEIGHT OF THIRTY-FIVE (35) TONS. AREA SHALL BE UNOBSTRUCTED AND SO CONFIGURED THAT A TRUCK WILL BE ABLE TO MAKE A ROUND TRIP FROM THE PUBLIC RIGHT-OF-WAY TO THE COLLECTION ARE AND RETURN WITHOUT EXCESSIVE BACKING INTO A TRAFFIC LANE OR A PUBLIC THOROUGHFARE. BACKING AROUND A BUILDING IS NOT ALLOWED. AT NO TIME SHALL A TRUCK BE REQUIRED TO BACK IN EXCESS OF FORTY-FIVE FEET (45').
   g. BIN ENCLOSURE GATES AND SERVICE AREA SHALL NOT OPEN INTO OR BE A PART OF A PARKING STALL OR LOADING ZONE.
   h. GATED ENTRANCE/EXIT SERVICE SITES SHALL BE AT LEAST FORTY FEET (40') AWAY FROM ENTRANCES AND EXITS TO PREVENT TRUCKS FROM STICKING OUT INTO THE ROADWAY WHILE WAITING TO ACCESS ENCLOSURE AND ALLOW TRUCKS ENOUGH SPACE TO CLEAR GATE ON EXITING WHILE WAITING TO MERGE WITH TRAFFIC.
   i. THE ENCLOSURE(S) SHALL ACCOMMODATE REFUSE BINS, RECYCLE BINS, AND GREASE BARRELS WHEN APPLICABLE. NEITHER THE WASTE NOR RECYCLING CONTAINER SHALL BE REQUIRED TO BE MOVED IN ORDER TO SERVICE THE OTHER. GREASE BARRELS SHALL NOT BE PLACED IN THE SAME AREA OF THE ENCLOSURE WITH REFUSE OR RECYCLABLES.
   j. OWNER/OCCUPANTS SHALL NOT USE ENCLOSURES FOR STORAGE OR PLACE ANY MATERIALS AROUND THE TRASH, RECYCLE, OR GREASE CONTAINERS.
   k. SIGNAGE IS REQUIRED TO CLEARLY IDENTIFY ALL RECYCLING, SOLID WASTE COLLECTION, AND LOADING AREAS AND THE MATERIALS ACCEPTED THEREIN. THIS SIGNAGE SHALL BE PLACED AT ALL POINTS OF DIRECT ACCESS TO RECYCLING, SOLID WASTE, AND LOADING AREAS ON, OR ADJACENT TO, THE RECYCLABLE AND SOLID WASTE MATERIAL CONTAINERS.
   l. SITES UTILIZING COMPACTORS AND/OR ROLL-OFFS REQUIRE SIXTY FEET (60') OF CLEARANCE IN FRONT OF THE UNIT, AND A MINIMUM OF THREE FEET (3') ON EACH SIDE, FOR LOADING AND UNLOADING.

TYPICAL REFUSE ENCLOSURE DETAILS	REF. & REV. NOV., 2007	CITY OF FRESNO P-34