City of FRESNO **REPORT TO THE CITY COUNCIL**

AGENDA ITEM NO.	1D
COUNCIL MEETING	2/3/09
APPROVED BY	
DEPARTMENT DIRECTOR	
CITY MANAGER	

February 3, 2009

FROM: PATRICK N. WIEMILLER, Director
Public Works Department

BY: EFREN BAÑUELOS, Assistant Director
Public Works Department, Capital Management Division

JOSÉ R. GARCIA, Senior Engineering Technician
Public Works Department, Design Services

SUBJECT: 1) APPROVE A REIMBURSEMENT AGREEMENT WITH THE FRESNO METROPOLITAN FLOOD CONTROL DISTRICT IN THE AMOUNT OF $94,895 FOR CONSTRUCTION OF STREET IMPROVEMENTS IN FLORENCE AVENUE: CEDAR TO JACKSON AVENUE (COUNCIL DISTRICT 5)
2) AUTHORIZE THE PUBLIC WORKS DIRECTOR OR HIS DESIGNEE TO SIGN THE AGREEMENT ON BEHALF OF THE CITY

KEY RESULT AREA

Attain full air quality compliance by 2013.

RECOMMENDATIONS

1) Approve a reimbursement agreement with the Fresno Metropolitan Flood Control District in the amount of $94,895 for construction of street improvements in Florence: Cedar Avenue to Jackson Avenue.

2) Authorize the Public Works Director or his Designee to sign the agreement on behalf of the City.

EXECUTIVE SUMMARY

The City of Fresno has prepared plans to re-construct Florence Avenue from Cedar Avenue to Jackson Avenue adjacent to Calwa Park. The Fresno Metropolitan Flood Control District which own and operate a flood control basin on the north side of Florence Avenue requested the City of Fresno to install the needed street improvements along the frontage of the basin as part of the Florence Avenue Widening Project. The Fresno Metropolitan Flood Control District will reimburse the City of Fresno $94,895 for the cost of installing the street improvements.

KEY OBJECTIVE BALANCE

The recommendation emphasizes the City of Fresno's efforts to widen Florence Avenue between Cedar Avenue and Jackson Avenue to its ultimate street width, thus enhancing the safety, aesthetics, traffic flow, and the accommodation of new growth in southeast Fresno (District 5).

BACKGROUND

Funding to construct these street widening improvements is attributed to Proposition 1B. The Highway Safety, Traffic Reduction, Air Quality, and Port Security Bond Act of 2006, approved by the voters as Proposition 1B on November 7, 2006, includes a program of funding from $4.5 billion to be deposited in the Corridor Mobility Improvement Account (CMIA). The City as a partner initiated a coordinated effort with the Fresno Metropolitan Flood Control District, which requested staff to include the installation of full street width improvements at the Florence Avenue street frontage at Basin "GG" to provide adequate drainage to Florence Avenue during a storm event. The Fresno Metropolitan Flood Control District has prepared a reimbursement agreement to compensate the City in full for the items of work requested by the District. The reimbursement agreement has been reviewed by the City Attorney's office and a copy is attached to this report.

Further, the Fresno Metropolitan Flood Control District has coordinated and constructed master planned storm drain improvements in Florence Avenue between Cedar and Jackson Avenue in anticipation of these aforementioned street improvements in Florence Avenue.

FISCAL IMPACT

Entering into this agreement will not adversely impact the City of Fresno. The costs to construct frontage improvements along the flood control basin will be reimbursed to us by the Fresno Metropolitan Flood Control District.

PNW/EB/LB/JG/eam
Apprv Reimb Agrmt FMFCD Str Imprv Florence 2-3-09

Attachment: 1 Copy of Agreement

AGREEMENT No.
1517(G)-GG-18

AGREEMENT FOR CONSTRUCTION AND RE-CONSTRUCTION OF STREET IMPROVEMENTS BASIN "GG"

THIS AGREEMENT FOR CONSTRUCTION AND RE-CONSTRUCTION OF STREET IMPROVEMENTS ("Agreement"), is made and entered into this ____ day of _____, 2008, by and between FRESNO METROPOLITAN FLOOD CONTROL DISTRICT, a California public agency ("District"), and the CITY OF FRESNO, a municipal corporation ("City").

RECITALS

WHEREAS, the District has adopted and is responsible for implementing its Storm Drainage and Flood Control Master Plan ("Master Plan"); and

WHEREAS, the City desires to construct and re-construct Florence Avenue Street Improvements ("Project") as depicted in Exhibit No. 1, attached hereto and incorporated herein by this reference; and

WHEREAS, the District desires to have the City include within the Project, the construction and re-construction of certain street improvements along the frontage of Basin "GG" ("Basin Improvements"), as depicted in Exhibit No. 2 and itemized on Exhibit No. 3; and

WHEREAS, the City is willing to include the Basin Improvements as a part of the Project; and

WHEREAS, the District desires to reimburse the City for the cost of the Basin Improvements; and

WHEREAS, upon completion of the Project, the City desires to transfer ownership of the mowstrip portion of the Basin Improvements to the District for perpetual maintenance and use; and

WHEREAS, the District possesses the legal authority to accept ownership of said mowstrip pursuant to Paragraph No. 5 herein.

NOW, THEREFORE, in consideration of the recitals set forth above, which are herein incorporated by this reference, and the mutual covenants and undertakings set forth herein, the mutual receipt and sufficiency of which is hereby acknowledged, the District and the City agree as follows:

1. The City shall construct the Project in accordance with (i) the City's and the District's respective Standard Plans and Specifications; and (ii) plans and specifications approved by District pursuant to Paragraph No. 3 below.

2. The District shall reimburse the City for the cost of the Basin Improvements as shown on Exhibit No. 2 on a time and materials basis, utilizing records established by the City in an amount not to exceed $95,000. An itemized description of the Basin Improvements and an estimate of their costs is set forth in Exhibit No. 3, attached hereto and incorporated herein by this reference. Final payment to the City shall be based on the City's actual cash expenditures for the Basin Improvements, subject to the provisions of Paragraph No. 7 below.

3. The City shall provide to District the plans and specifications pertaining to the Street Improvements ("Project Plans") no less than ninety (90) days before the commencement of

construction on the Project. District shall have ten (10) days to review and provide its written approval or disapproval of such Project Plans. The City's approval of Project Plans shall not be deemed final and complete until the District provides its final written approval thereof.

4. The District shall have the right to periodically inspect as it deems appropriate and approve or disapprove the construction of the Basin Improvements prior to the City's final acceptance of the Project. Upon completion of the Basin Improvements, and within ten (10) days after receipt of the notification of completion, District shall inspect the Basin Improvements and (i) accept, in writing, those facilities so constructed which conform in all material respects to the Project Plans, and (ii) notify the City in writing of any portion of the Basin Improvements which do not conform to the Project Plans, and the specific respects in which they do not conform. In the event that any of the Basin Improvements so constructed do not conform in all material respects to the Project Plans, the City shall cause such nonconformity to be corrected, at no additional cost to the District, prior to the District's acceptance of those Basin Improvements. If the nonconformity cannot be corrected within a reasonable time, not less than sixty (60) calendar day, after receipt of such written notice by the District, the District may reject the nonconforming Basin Improvements, or may accept them in writing. If the District accepts any such nonconforming Basin Improvements, the reimbursement required pursuant to Paragraph No. 2 hereof shall be adjusted as mutually determined by the District and the City to reflect the reduced value of the accepted nonconforming Basin Improvements. Those Basin Improvements that do not conform to the Project Plans and are not accepted by the District shall not be subject to any reimbursement.

5. Upon completion and final acceptance of the Project, ownership of the mowstrip portion of the Basin Improvements shall automatically transfer to the District for perpetual operation and maintenance.

6. Within sixty (60) days after final acceptance of the Project, the City shall provide the District with one twenty-four inch (24") by thirty-six inch (36") reproducible set of as-built drawings of the Street Improvements and an itemized cost schedule similar in form to Exhibit No. 3 hereto reflecting the final construction cost of the Basin Improvements.

7. The District shall make progress payments to the City as billed by the City to meet City's actual cash expenditures, which shall not exceed ninety-percent (90%) of the total amount to be reimbursed pursuant to Paragraph No. 2 herein. Payment shall be made within thirty (30) calendar days after the City submits a bill therefor to the District. The District shall reimburse the City the final ten percent (10%) of the amount to be reimbursed pursuant to Paragraph No. 2 within thirty (30) days after the later of either (i) the receipt by the District of the submittals required pursuant to Paragraph No. 6, or (ii) receipt of final billing by the City. In the event that the District does not accept a portion of the Basin Improvements or accepts the Basin Improvements at a reduced value, the City shall return to the District any funds previously paid to the City related to this Agreement in an amount equal to the greater of either (i) the cost of the rejected portion of the Basin Improvements, or (ii) the amount of the reduced value to the District of Basin Improvements not conforming to the approved Project Plans as determined by the District pursuant to Paragraph No. 4 hereof. The return of such funds shall occur within thirty (30) days after receipt of billing by the District therefor.

8. Indemnity.

(a) City shall indemnify, defend, and hold harmless District and District's officers, agents, employees, consultants and volunteers from and against any claim, liability, loss, or damage caused by any willful misconduct or negligent act or omission of the City or City's officers, agents, employees, volunteers, consultants, vendors, or contractors arising out of the City's rights and obligations pursuant to this Agreement, except to the extent such claim, liability, loss, or damage is caused in whole or in part by the negligence or willful misconduct of District.

(b) District shall indemnify, defend, and hold harmless City and City's officers, agents, employees, consultants and volunteers from and against any claim, liability, loss, or damage caused by any willful misconduct or negligent act or omission of the District or District's officers, agents, employees, consultants or volunteers arising out of the District's rights and obligations pursuant to this Agreement, except to the extent such claim, liability, loss, or damage is caused in whole or in part by the negligence or willful misconduct of City.

(c) This Paragraph No. 8 shall survive termination or expiration of this Agreement.

9. Miscellaneous.

(a) Entire Agreement. This Agreement (including the Exhibits hereto) contains the entire agreement between District and City in regard to the subject matter hereof, and no oral statements or prior written documents not specifically incorporated into this Agreement shall be any force or effect.

(b) Modifications. This Agreement may be modified only by a written document executed by both parties hereto.

(c) Notice. All notices required or permitted by this Agreement or applicable law shall be in writing and may be delivered in person (by hand or by courier) or may be sent by regular, certified or registered mail or U.S. Postal Service Express Mail, with postage prepaid, or by facsimile transmission, and shall be deemed sufficiently given if served in a manner specified in this Paragraph No. 9(c). The addresses noted below shall be that party's address for delivery or mailing of notices. Either party may by written notice to the other specify a different address for notice. Any notice sent by registered or certified mail, return receipt requested, shall be deemed given on the date of delivery shown on the receipt card, or if no delivery date is shown, two (2) days after the postmark thereon. If sent by regular mail the notice shall be deemed given forty-eight (48) hours after the same is addressed as required herein and mailed with postage prepaid. Notices delivered by United States Express Mail or overnight courier that guarantee next day delivery shall be deemed given twenty-four (24) hours after delivery of the same to the Postal Service or courier. Notices transmitted by facsimile transmission or similar means shall be deemed delivered upon telephone confirmation of receipt (confirmation report from fax machine is sufficient), provided a copy is also sent via personal delivery or mail. If notice is received after 4:30 p.m. in the time zone in which the party is located, or on a Saturday, Sunday or legal holiday, it shall be deemed received on the next business day.

City of Fresno
2600 Fresno Street, Room 4019
Fresno, CA 93721-3623
Attn: Scott Mozier
Fax Number: 559-488-1045

Fresno Metropolitan Flood Control District
5469 East Olive Avenue
Fresno, CA 93727
Attn: Jerry Lakeman
Fax Number: 559-456-3194

(d) Severability. If any provision of this Agreement is held to be illegal, invalid or unenforceable under present or future laws, such provision shall be fully severable, and this Agreement shall be construed and enforced as if such illegal, invalid, or unenforceable provision were not a part hereof, and the remaining provisions hereof shall remain in full force and effect. In lieu of any such illegal, invalid, or unenforceable provision herein, there shall be automatically added as a part of this Agreement a provision as similar in its terms to such illegal, invalid or unenforceable provision as may be possible and be legal, valid and enforceable.

(e) Construction. The parties hereto acknowledge that each party has, or has had the opportunity to have, counsel of its own choosing review and revise this Agreement, such that the normal rule of construction to the effect that any ambiguities are to be resolved against the drafting party shall not be employed in the interpretation of this Agreement or any exhibits or amendments hereto.

(f) Governing Law and Venue. This Agreement shall be governed by, and construed and enforced in accordance with, the laws of the State of California. Venue for the purposes of the filing of any action regarding the enforcement or interpretation of this Agreement and any rights and duties hereunder shall be Fresno County, California.

(g) Waiver. No failure or delay by a party to insist on the strict performance of any provision of this Agreement, or to exercise any right or remedy upon a breach thereof, shall constitute a waiver of any breach or subsequent breach of such provision. The waiver by either

party of a breach by the other of any provision of this Agreement shall not constitute a continuing waiver or a waiver of any subsequent breach of either the same or a different provision of this Agreement. No provisions of this Agreement may be waived except in writing signed by all parties to this Agreement. Waiver of any one provision herein shall not be deemed to be a waiver of any other provision herein.

(h) Assignment. Neither party hereto shall assign this Agreement, or any interest therein, without the prior written consent of the other. Any such attempted assignment in violation of this Agreement shall be null and void.

(i) Binding. Once this Agreement is signed by all parties, it shall be binding upon, and shall inure to the benefit of, all parties, and each parties' respective heirs, successors, assigns, contractors, subcontractors, transferees, agents, servants, employees, and representatives.

IN WITNESS WHEREOF, the parties hereto have caused this Agreement to be executed this ____ day of _____, 2009.

"City"

CITY OF FRESNO
A Municipal Corporation

By:_____
Scott Mozier,
Assistant Public Works Director

"District"

FRESNO METROPLITAN FLOOD CONTROL DISTRICT

By:_____
Bob Van Wyk,
General Manager-Sectary

City's Counsel

By:_____, for
James C. Sanchez,
City Attorney

NOTE:
THIS DRAWING IS SCHEMATIC,
DISTANCES ARE APPROXIMATE.

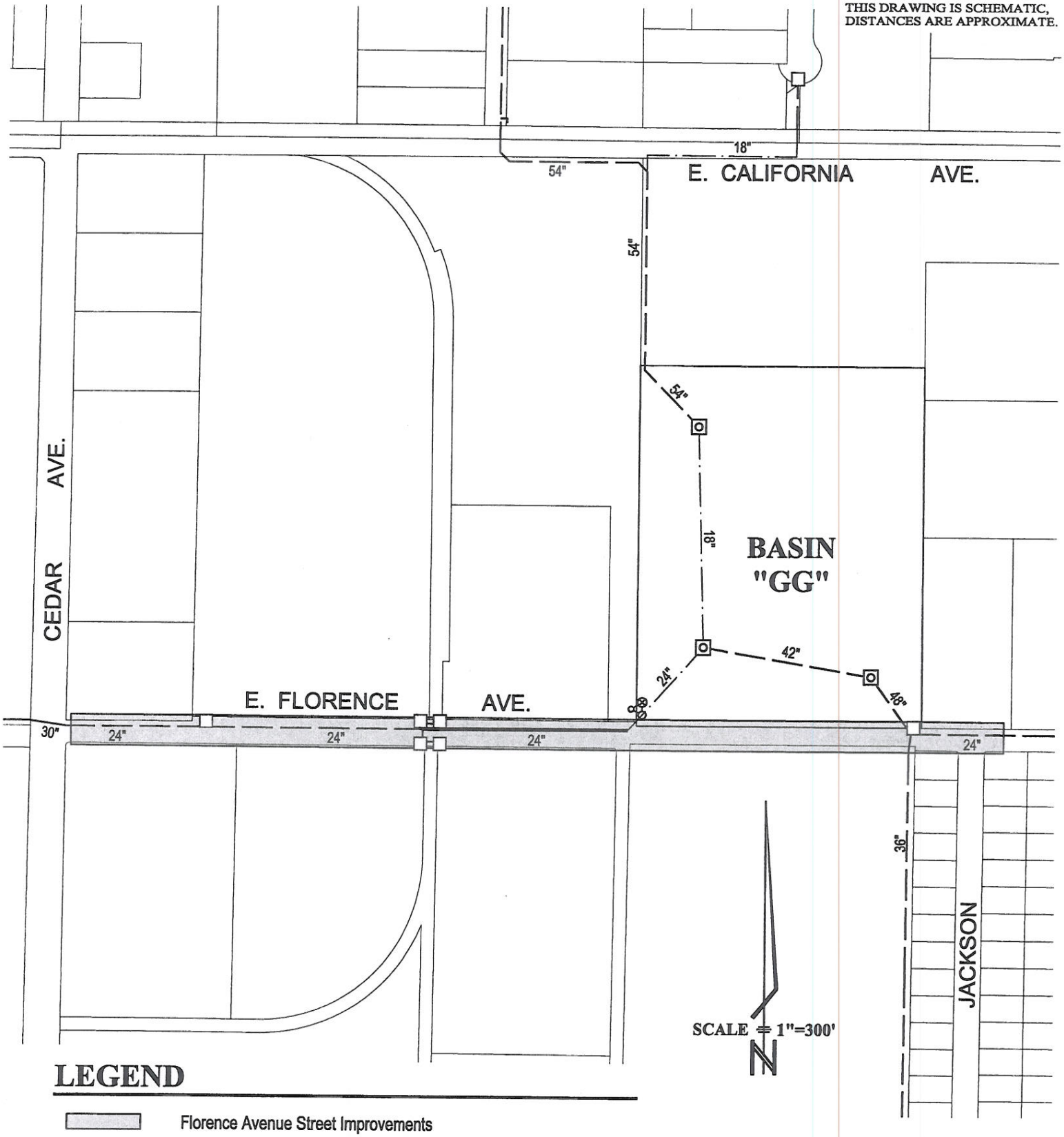

LEGEND

- Florence Avenue Street Improvements
- Storm Drain to be Constructed by District Prior to Road Improvements
- Existing Master Plan Facilities
- Future Master Plan Facilities
- Existing Master Plan Outfall

AGREEMENT
1517(G)-GG-18
DRAINAGE AREA: "CG"

EXHIBIT NO. 1

FRESNO METROPOLITAN FLOOD CONTROL DISTRICT

K:\Autocad\DWGS\0EXHIBIT\AGREEMENT\1517(G)-GG-18.dwg

DRAWN BY: MDHill DATE: 12/2/08
REVISED BY: — DATE: —

NOTE:
THIS DRAWING IS SCHEMATIC,
DISTANCES ARE APPROXIMATE.

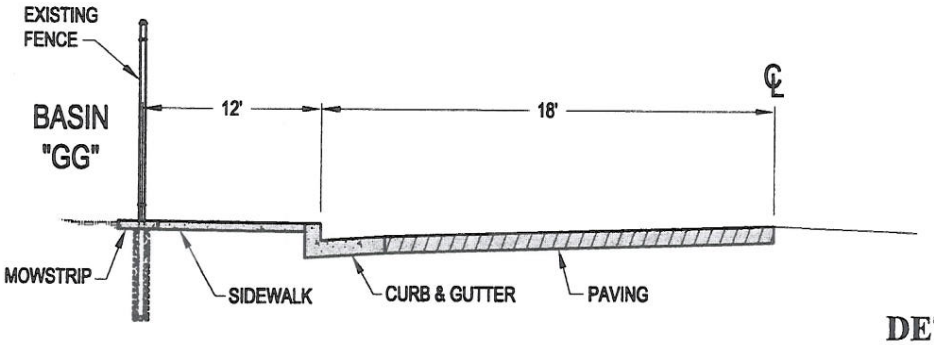

DETAIL LEGEND

Basin Improvements

PROPOSED STREET IMPROVEMENTS
Section A-A

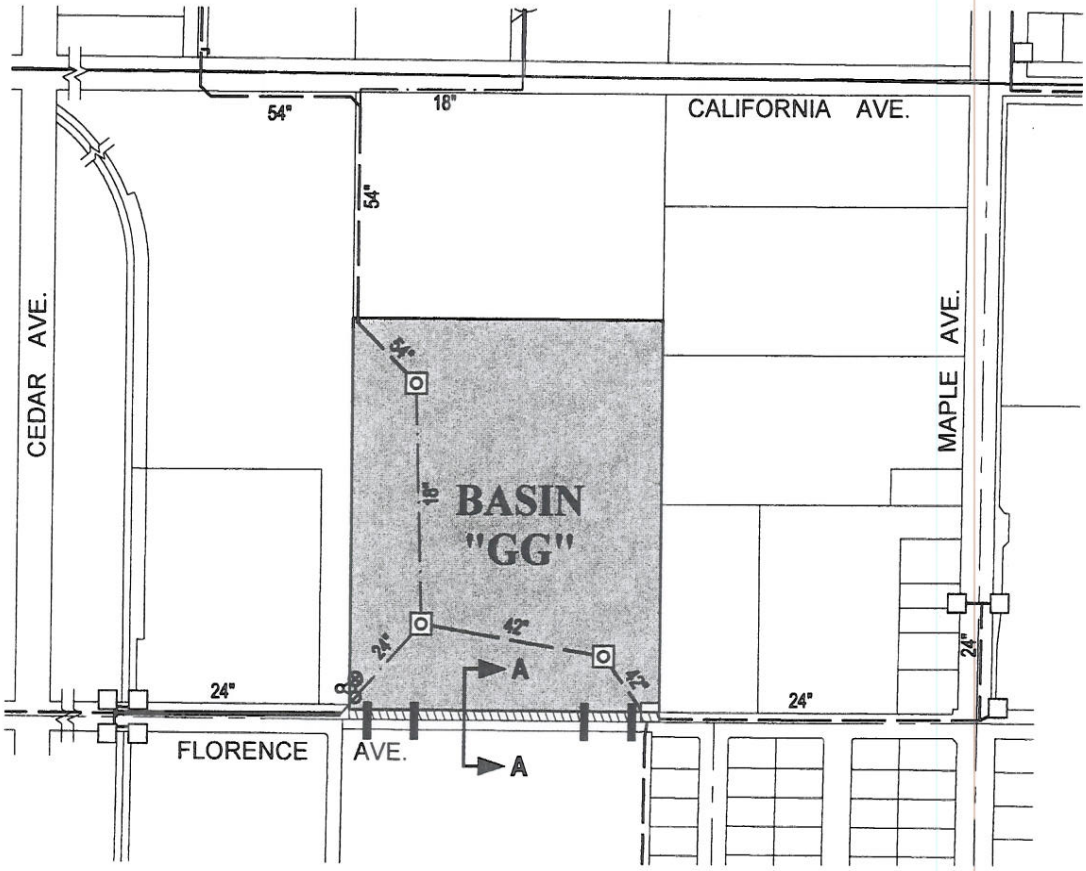

SCALE = 1"=400'

LEGEND

- Storm Drain To Be Constructed By District Prior To Road Improvements
- Proposed Basin "GG" Street Improvements
- Drive Approach
- Existing Master Plan Facilities
- Future Master Plan Facilities
- Existing Master Plan Outfall

AGREEMENT 1517 (G)-GG-18

DRAINAGE AREA: "GG"

EXHIBIT NO. 2

FRESNO METROPOLITAN FLOOD CONTROL DISTRICT

K:\Autocad\DWGS\0EXHIBIT\BASINS\GG\GG-18 EXHIBIT 2.dwg

DRAWN BY: MDHIII DATE: 10/3/07
REVISED BY: — DATE: —

PRELIMINARY COST ESTIMATE FOR MASTER PLAN FACILITIES ELIGIBLE FOR REIMBURSEMENT TO CITY BY DISTRICT

Drainage Area "GG"

Description	Quantities	Unit Prices	Amount
Curb and Gutter	626 LF	$ 20.00	$12,520.00
Sidewalk (11 foot wide)	6,500 SF	$ 5.00	$32,500.00
Mowstrip (15 inches wide)	650 LF	$ 17.50	$11,375.00
24 foot Drive Approach	2 EA	$3,000.00	$ 6,000.00
Street Paving (18 foot wide)	650 LF	$ 50.00	$32,500.00
		Total =	**$94,895.00**

Exhibit No. 3