GENERAL NOTES

1) STRUCTURES THAT ARE FREESTANDING SHALL BE CONSTRUCTED WITH COLUMNS EMBEDDED IN CONCRETE PER DETAIL C, (SEE ADDITIONAL SHEET), OR ADEQUATELY BRACED PER DETAIL A.

2) IF OVERHANG BEYOND THE BEAM EXCEEDS 2'-0", THEN USE THE TABLE FOR A PROJECTION 2'-0" GREATER THAN ACTUAL.

3) POWER LINES TO BE A MIN. OF 3'-0" ABOVE A WOOD ROOF, & A MIN. OF 8'-0" ABOVE A METAL ROOF.

4) NO SOLID CEILING OR ENCLOSED ATTIC SPACE PERMITTED.

5) ROOFING MATERIAL: _____ o/ 15# FELT o/ $\frac{1}{2}$" CCX PLYWOOD $\frac{24}{0}$ SPAN INDEX W/ 8d NAILS @ 6" O.C. EDGE NAIL, & 12" O.C. FIELD NAIL.

RAFTERS:
2x_____ D.F. NO. ____.

BEAMS:
4x_____ D.F. NO. ____.

COLUMNS:
_____ O.C.

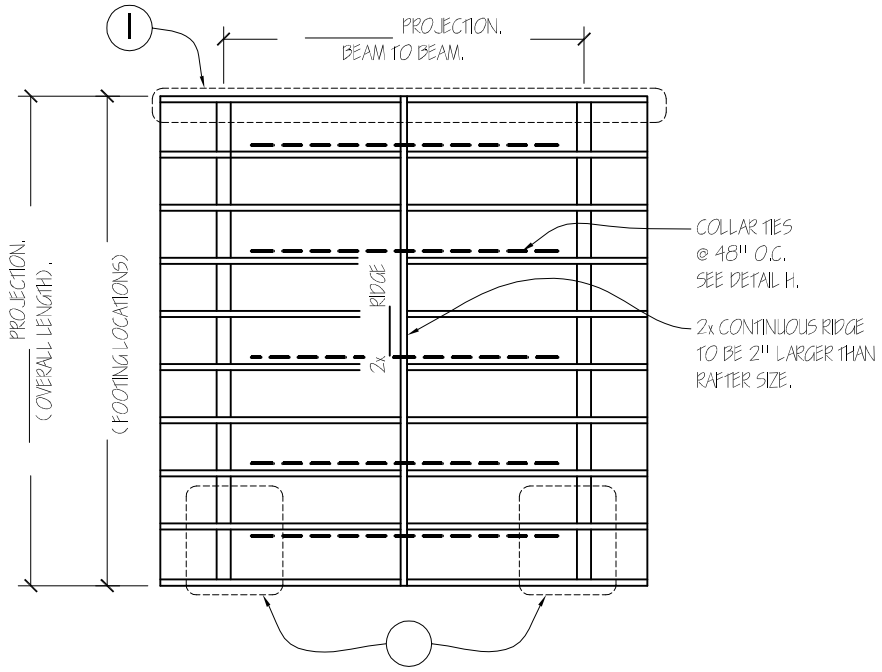

G ROOF FRAMING.
NO SCALE

RAFTER SPANS			
SIZE	SPACING	D.F. #1	D.F. #2
2x4	12" O.C.	10'-6"	10'-6"
	16" O.C.	9'-6"	9'-3"
	24" O.C.	8'-3"	8'-3"
2x6	12" O.C.	16'-3"	16'-0"
	16" O.C.	14'-9"	14'-6"
	24" O.C.	13'-0"	12'-9"
2x8	12" O.C.	21'-3"	21'-0"
	16" O.C.	19'-6"	19'-0"
	24" O.C.	17'-0"	16'-9"
2x10	12" O.C.	26'-0"	26'-0"
	16" O.C.	25'-9"	25'-9"
	24" O.C.	21'-9"	21'-3"
2x12	12" O.C.	25'-9"	25'-9"
	16" O.C.	25'-6"	25'-6"
	24" O.C.	25'-3"	25'-3"

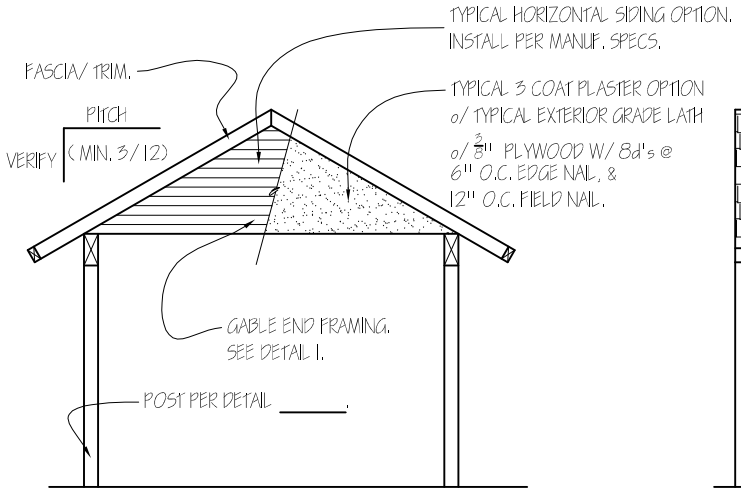

F FRONT ELEVATION.
NO SCALE

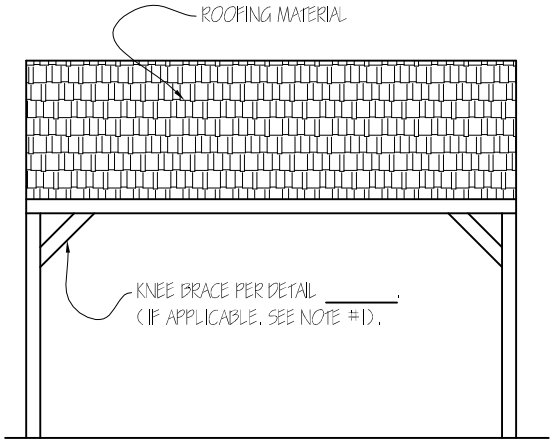

E SIDE ELEVATION
NO SCALE

BEAM SIZE AND MAX. COLUMN SPACING.				
*PROJECTION	4x6	4x8	4x10	4x12
10'-0"	11'-0"	14'-6"	18'-0"	21'-0"
11'-0"	10'-6"	14'-0"	17'-6"	20'-0"
12'-0"	10'-6"	13'-6"	16'-6"	19'-0"
13'-0"	10'-0"	13'-0"	16'-0"	18'-6"
14'-0"	9'-6"	12'-6"	15'-6"	18'-0"
15'-0"	9'-6"	12'-0"	15'-0"	17'-6"
16'-0"	9'-0"	12'-0"	14'-6"	16'-6"
17'-0"	9'-0"	11'-6"	14'-0"	16'-6"
18'-0"	8'-6"	11'-0"	13'-6"	16'-0"
19'-0"	8'-6"	11'-0"	13'-6"	15'-6"
20'-0"	8'-0"	10'-6"	13'-0"	15'-0"
21'-0"	8'-0"	10'-6"	12'-6"	14'-6"
FOOTING SIZES	12"x 12"	18"x 18"		24"x 24"

CITY OF FRESNO
INCORPORATED OCT. 12, 1885

CITY OF FRESNO
FREE STANDING GABLE END CARPORT.

PROJECT ADDRESS :

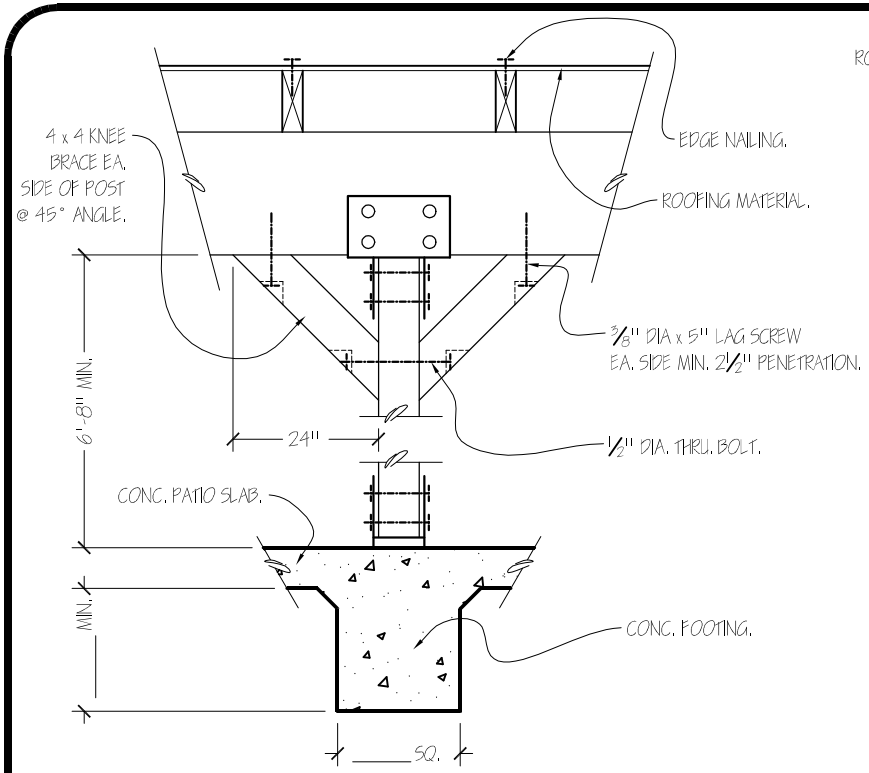

A FREE STANDING POST

NO SCALE

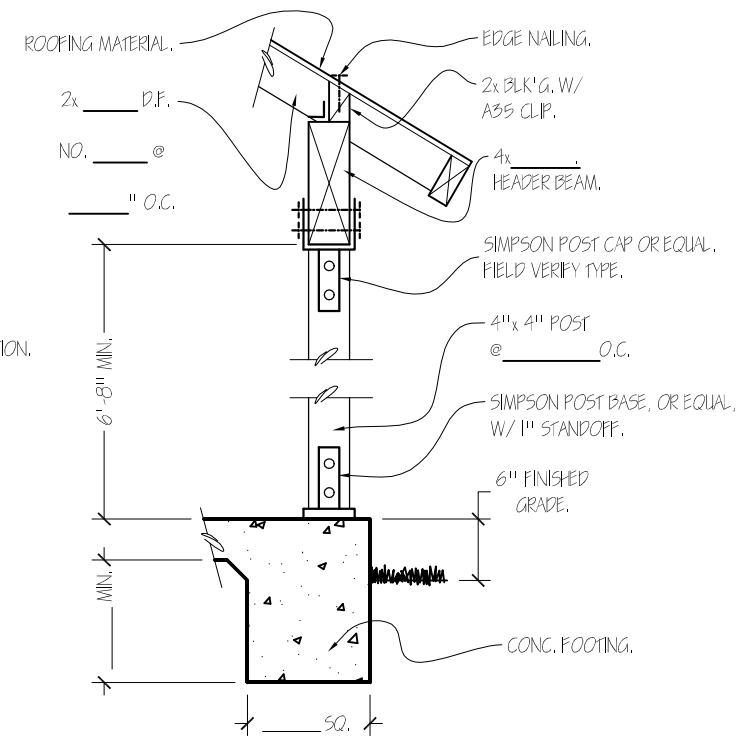

B FREE STANDING POST SECTION.

NO SCALE

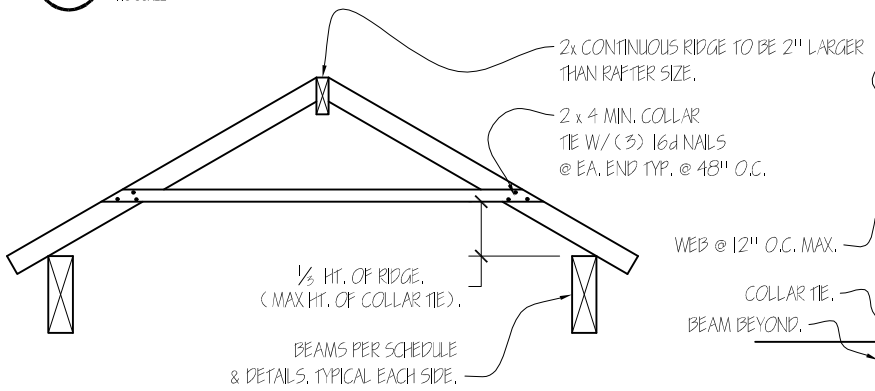

H COLLAR TIE DETAIL.

NO SCALE

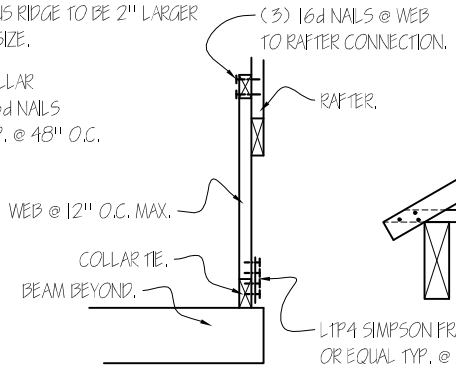

1-1 SECTION.

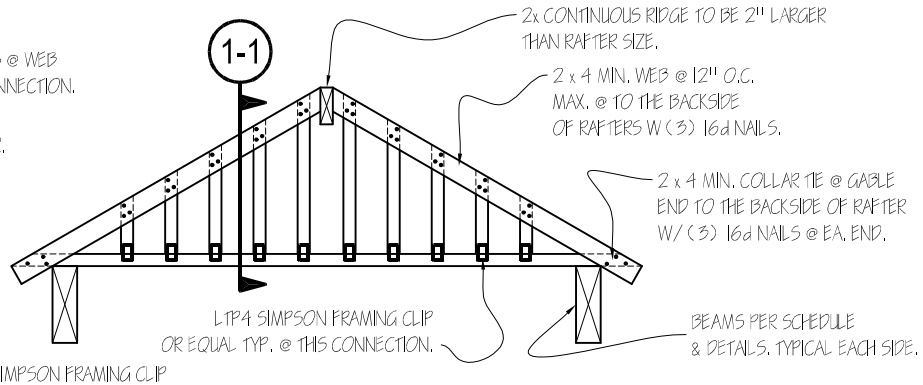

I GABLE END ASSEMBLY.

NO SCALE

CITY OF FRESNO

FREE STANDING GABLE END CARPORT.

PROJECT ADDRESS :

RAFTER SPANS			
SIZE	SPACING	D.F. #1	D.F. #2
2x4	12" O.C.	10'-6"	10'-6"
	16" O.C.	9'-6"	9'-3"
	24" O.C.	8'-3"	8'-3"
2x6	12" O.C.	16'-3"	16'-0"
	16" O.C.	14'-9"	14'-6"
	24" O.C.	13'-0"	12'-9"
2x8	12" O.C.	21'-3"	21'-0"
	16" O.C.	19'-6"	19'-0"
	24" O.C.	17'-0"	16'-9"
2x10	12" O.C.	26'-0"	26'-0"
	16" O.C.	25'-9"	25'-9"
	24" O.C.	21'-9"	21'-3"
2x12	12" O.C.	25'-9"	25'-9"
	16" O.C.	25'-6"	25'-6"
	24" O.C.	25'-3"	25'-3"

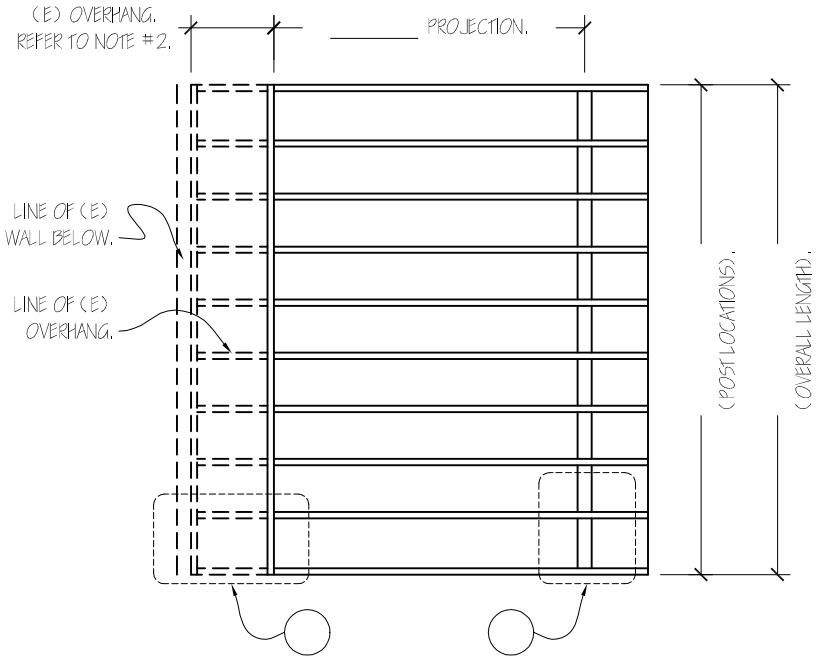

G ROOF FRAMING.
NO SCALE

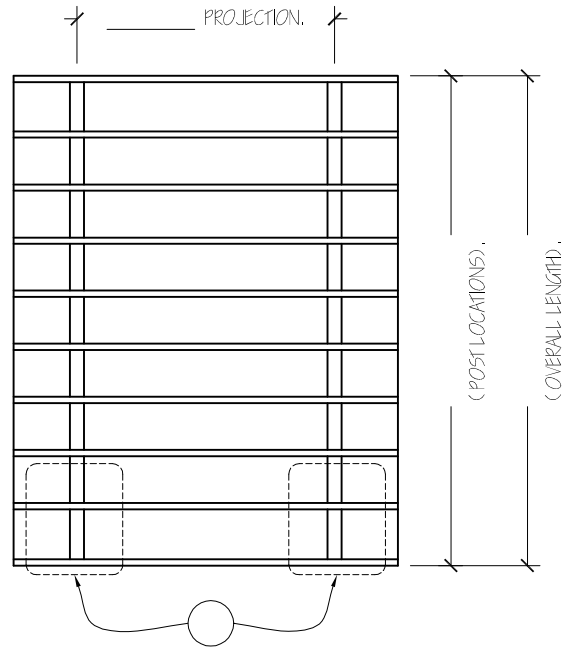

H ROOF FRAMING.
NO SCALE

BEAM SIZE AND MAX. COLUMN SPACING.				
*PROJECTION	4x6	4x8	4x10	4x12
10'-0"	11'-0"	14'-6"	18'-0"	21'-0"
11'-0"	10'-6"	14'-0"	17'-6"	20'-0"
12'-0"	10'-6"	13'-6"	16'-6"	19'-0"
13'-0"	10'-0"	13'-0"	16'-0"	18'-6"
14'-0"	9'-6"	12'-6"	15'-6"	18'-0"
15'-0"	9'-6"	12'-0"	15'-0"	17'-6"
16'-0"	9'-0"	12'-0"	14'-6"	16'-6"
17'-0"	9'-0"	11'-6"	14'-0"	16'-6"
18'-0"	8'-6"	11'-0"	13'-6"	16'-0"
19'-0"	8'-6"	11'-0"	13'-6"	15'-6"
20'-0"	8'-0"	10'-6"	13'-0"	15'-0"
21'-0"	8'-0"	10'-6"	12'-6"	14'-6"
FOOTING SIZES	12"x 12"	18"x 18"		24"x 24"

GENERAL NOTES

1) STRUCTURES THAT ARE FREESTANDING, OR STRUCTURES GREATER THAN 75 % OF WIDTH SHALL BE CONSTRUCTED WITH COLUMNS EMBEDDED IN CONCRETE PER DETAIL C, (SEE ADDITIONAL SHEET), OR ADEQUATELY BRACED PER DETAIL A.

2) IF OVERHANG BEYOND THE BEAM EXCEEDS 2'-0", THEN USE THE TABLE FOR A PROJECTION 2'-0" GREATER THAN ACTUAL.

3) POWER LINES TO BE A MIN. OF 3'-0" ABOVE A WOOD ROOF, & A MIN. OF 8'-0" ABOVE A METAL ROOF.

4) NO SOLID CEILING PERMITTED.

5) ROOFING MATERIAL: _____ o/ 15# FELT o/ $\frac{1}{2}$" CCX PLYWOOD $\frac{24}{0}$ SPAN INDEX W/ 8d NAILS @ 6" O.C. EDGE NAIL, & 12" O.C. FIELD NAIL.

RAFTERS:
2x____ D.F. NO. ____.

BEAMS:
4x____ D.F. NO. ____.

COLUMNS:
_____ O.C.

CITY OF FRESNO
MONO SLOPED PATIO DETAILS.

PROJECT ADDRESS :

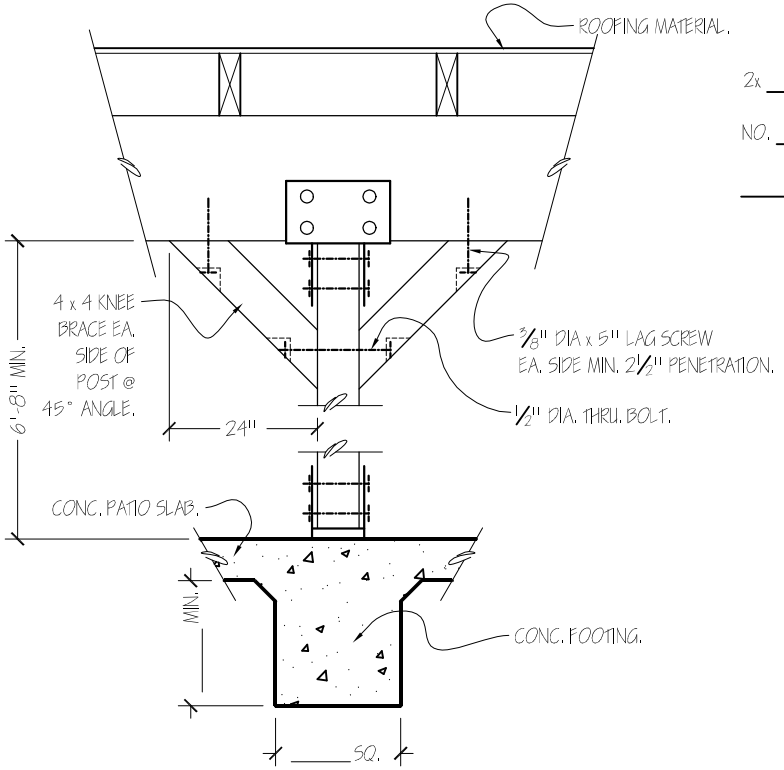

A FREE STANDING POST

NO SCALE

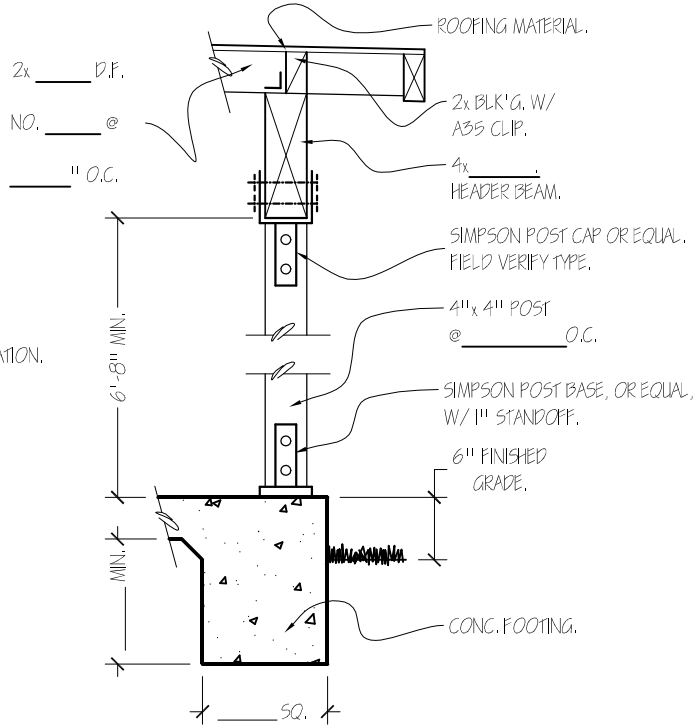

B POST SECTION.

NO SCALE

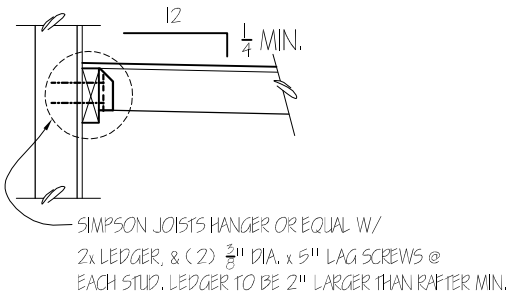

F WALL ATTACHMENT

NO SCALE

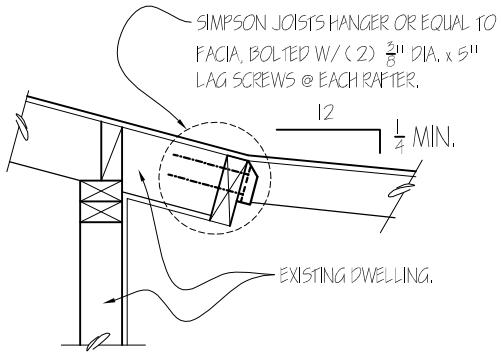

E EAVE ATTACHMENT

NO SCALE

CITY OF FRESNO

MONO SLOPED PATIO DETAILS.

PROJECT ADDRESS :

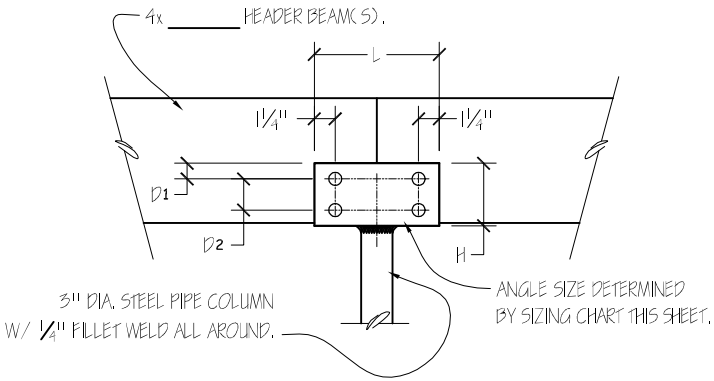

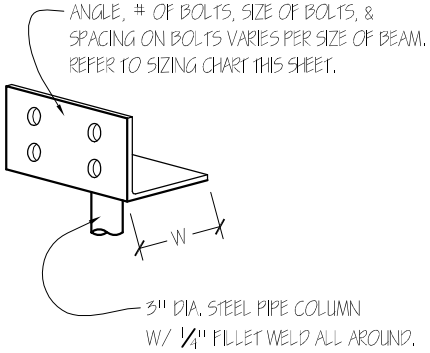

D POST CAP BOLTING DIAG.

NO SCALE

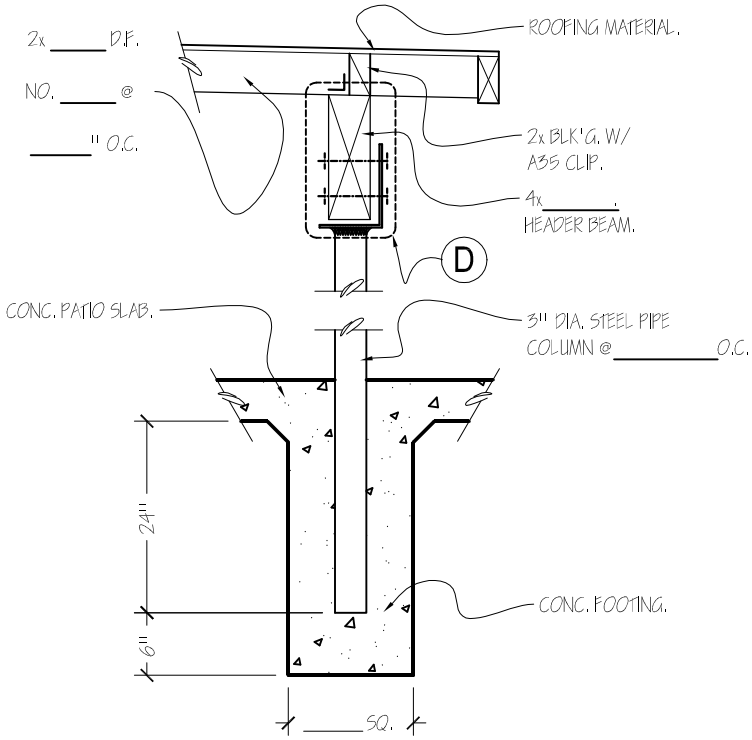

C FREESTANDING STEEL COLUMN

NO SCALE

	POST CAP SIZING CHART.							
	BEAM WIDTH	ANGLE IRON DIMENSIONS			BOLT SPACING		FASTENERS	
		W	L	H	D_1	D_2	QTY.	DIA
1	4x6	4"	11"	$6\frac{1}{2}$"	$1\frac{1}{4}$"	3"	4	$\frac{5}{8}$"
2	4x8	4"	11"	$6\frac{1}{2}$"	$1\frac{1}{4}$"	3"	4	$\frac{5}{8}$"
3	4x10	4"	13"	8"	$1\frac{1}{4}$"	4"	4	$\frac{3}{4}$"
4	4x12	4"	13"	10"	$1\frac{1}{4}$"	4"	4	$\frac{3}{4}$"

CITY OF FRESNO

STEEL DETAILS FOR CARPORTS/PATIOS.

PROJECT ADDRESS :